Repair Manual

911 Carrera
(993)

Volume I:
General
Engine

Dr. Ing. h.c. F. Porsche Aktiengesellschaft

Preface

Structure

The "Technical Literture" for the "911 Carrera (993)" model is basically structured as before, i.e. the structure follows the familiar repair groups.

A new feature is that the structure includes the main groups **0 to 9** and the main group **D**.

Main groups:	0	Complete vehicle – General
	1	Engine
	2	Fuel, exhaust, engine electrical system
	3	Transmission
	4	Chassis
	5	Body
	6	Body equipment, outside
	7	Body equipment, interior
	8	Air conditioning
	9	Electrical system
	D	Diagnosis

Layout

The layout in the below items remains unchanged throughout the repair manual

1. Table of tightening torques
2. Special tools required
3. Exploded views
4. Legends for the exploded views
5. Assembly notes / use of special tools

As a new feature, however, the former item 6 (Repair group diagnosis) is no longer filed in the volume corresponding to the respective repair group. The **Diagnosis test plans / diagnosis procedures** have been combined in a **separate Diagnosis volume** broken down according to the main groups 0 to 9.

Another new feature is that the contents of the "Service Information Technik" are indicated in the Repair Manual. This brochure concentrates on a description of the design and function of components and of the new features introduced for a particular model year.

Service Number

All major repair procedures and repair descriptions are identified by a two- or four-digit **Service Number** completed by two additional digits to identify the work that corresponds to the first six digits of the working position number in the Working Times and Damage Catalog.

Example: 30 37 37 Dismantling and assembling clutch control shaft

Explanation: **30** **37** **37** 50 (full working position number)

Repair group
here: Clutch, control

Component designation
here: Clutch control shaft

Activity
here: Dismantling and assembling

Index
here: Removed

Presentation in the various documents

30 37 37 50	Working position no. from **Working Times and Damage Catalog**, consisting of repair group, component designation, activity and index
30 37 37	Six-digit number in **Repair Manual**, consisting of repair group, component designation and activity
30 37	Service number in **Service Information**, consisting of repair group and component designation

Goal

The introduction of a service number in the "technical literature" is intended to facilitate standardization and positive identification to allow direct cross-referencing among the various documents. This is of particular importance with regard to the use of electronic media.

Structure of the Repair Manual

This Repair Manual describes all the important operations that require special instructions to ensure proper completion. This manual is an essential source of information for the shop foreman and the shop mechanics as the information in this manual must be observed at all times to keep the vehicle in safe and roadworthy condition. The basic safety rules of course also apply without exception to all repairs on motor vehicles.

Breakdown of the Repair Manual

1. Overview of repair groups
2. Registration sheet for supplements
3. List of contents
4. Technical data
5. Repair groups

Breakdown of the repair groups

1. Table of tightening torques
2. Special tools required
3. Exploded views
4. Legends for the exploded views
5. Assembly notes / use of special tools
6. Diagnosis for repair groups

The Repair Manual will be updated regularly with supplements which must be filed immediately to maintain the usefulness of the manual. Appropriate entries must be made in the registration sheet to prove that the manual is complete.

The contents of the Repair Manual will be supplemented by Technical Information Bulletins which will be integrated into the manual from time to time.

Desciptions of design and function can be found in the service training course reference material.

Layout of the exploded view

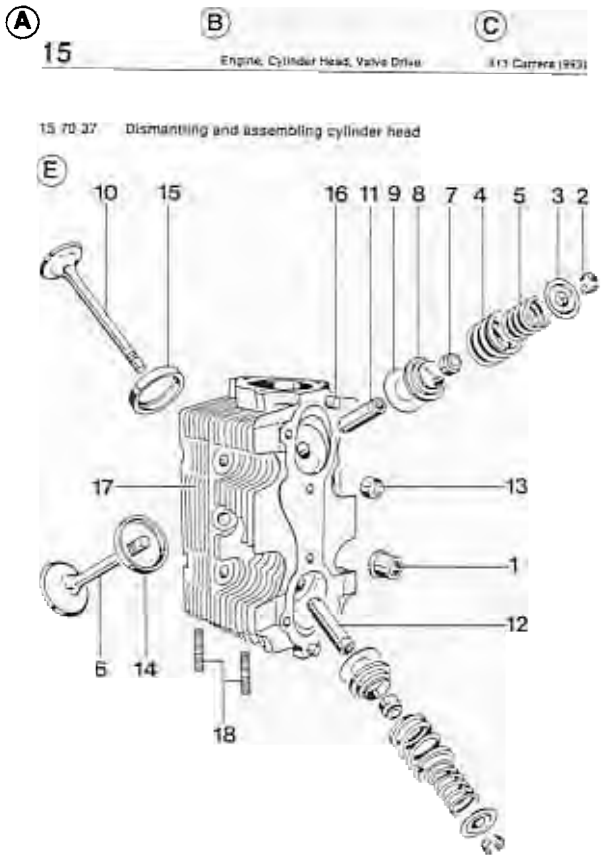

G H

No.	Designation	Qty.	Removal	Installation
1	Cylinder head nut	4	Use screwdriver insert for 9295 polygon-head nut	Apply a thin coat of Optimoly HT to cylinder head nut bearing surface
2	Valve collet	4		
3	Valve spring retainer	2		
4	Valve spring, outer	2		
5	Valve spring, inner	2		
6	Inlet valve	1		
7	Valve stem seal	2	Pull off	Replace, use assembly sleeve
8	Valve spring ring	2		
9	Washer	X		
10	Exhaust valve	1		
11	Valve guide, inlet	1		
12	Valve guide, outlet	1		
13	Thread insert	2		
14	Valve seat insert, inlet	1		
15	Valve seat insert, exhaust	1		
16	Roll pin	2		Pressed in to stop
17	Cylinder head	1		
18	Studs M 8 x 22	2		Fitted with Loctite 270, protruding length 23 - 0.5 mm. Screw studs with unmarked end into cylinder head (exhaust side)

A - Repair group, numbers
B - Repair group, text
C - Type of repair vehicle
D - Page number
E - Operation, including "**Service No.**" and "**Title**"
F - Impressum, supplement number, year of printing
G - Diagram item number in dismantling sequence
H - Special notes for removal or installation

The assembly notes/Special Tool lists following the exploded view are always arranged in the order of text → diagram.

Volume I:	**Overall vehicle – General**	**0**
General	Maintenance, diagnosis	03
Engine		
	Engine	**1**
	Engine – Crankcase, mounting	10
	Engine – Crankshaft, pistons	13
	Engine – Cylinder head, valve drive	15
	Engine – Lubrication	17
	Engine – Cooling	19
	Fuel, exhaust system, engine electrical system	**2**
	Fuel supply, control	20
	Exhaust system – Turbocharging	21
	Fuel system, electronic injection	24
	Fuel system, K-Jetronic	25
	Exhaust system	26
	Starter, power supply, GRA	27
	Ignition system	28
Volume II:	**Transmission**	**3**
Transmission	Clutch, control	30
Manual transmission	Manual transmission – Controls, case	34
	Manual transmission – Gears, shafts, inner operation	35
	Final drive, differential, differential lock	39
Volume III:	**Transmission**	**3**
Transmission	Automatic transmission – Torque converter	32
Automatic	Automatic transmission – Controls, case	37
transmission	Automatic transmission – Gears, control	38
	Final drive, differential, differential lock	39
Volume IV:	**Chassis**	**4**
Chassis	Front wheel suspension, drive shaft	40
	Rear wheel suspension, drive shaft	42
	Wheels, tires, alignment	44
	Anti-Lock System (ABS)	45
	Brakes – Mechanical	46
	Brakes – Hydraulics, regulator, booster	47
	Steering	48

Volume V:	**Body**	**5**
Body	Body front section	50
	Body center section, roof, frame	51
	Body rear section	53
	Hoods, lids	55
	Front doors, Central Locking System	57
	Exterior body equipment	**6**
	Sunroof	60
	Soft top, hardtop	61
	Bumpers	63
	Glasses, window control	64
	Exterior equipment	66
	Interior equipment, passenger protection	68
	Interior body equipment	**7**
	Trim, insulation	70
	Seat frames	72
	Seat upholstery, covers	74
Volume VI:	**Air conditioning**	**8**
Air conditioning	Heater	80
Vehicle electrics	Ventilation	85
	Air conditioning	87
	Auxiliary air conditioning system	88
	Electrical system	**9**
	Instruments, alarm	90
	Radio, telephone, on-board computer	91
	Windshield wipers and washer	92
	Exterior lights, lamps, switches	94
	Interior lights, lamps, switches	96
Volume VII:	**Electrical system**	**9**
Wiring diagrams	Wiring	97
Volume VIII:	**Diagnosis**	**D**
Diagnosis	Self-diagnosis	03
	DME Diagnosis	24
	Tiptronic Diagnosis	37
	PDAS Diagnosis	39
	ABS Diagnosis	45
	Airbag Diagnosis	68
	Heater Diagnosis	80
	Alarm Diagnosis	90

I General / Engine

The Repair Manual of the 911 Carrera (993) also includes the 911 Carrera 4 manual (993 four-wheel drive). The 911 Carrera (993) is the basic model covered by the repair operations described in this Manual. "911 Carrera (993)" is also indicated in the header of each page.

Descriptions of repair operations that deviate for the 911 Carrera 4 will be included after the respective 911 Carrera section. The repair descriptions of both models are separated by a cover page. All pages included after the cover page (separation sheet) have the "911 Carrera 4" heading. To facilitate distinction, the page numbering will start with 100.

0 Overall Vehicle –General

0 Technical data . . . . . 0 - 1

03 Maintenance, diagnosis

03 20 00 Maintenance . . . . . 03 - 1
03 80 00 Additional service . . . . 03 - 23

1 Engine

1 Tightening torques for the engine 1 -

10 Engine– Crankcase, Mounting

10 01 19 Removing and installing the engine . . . . . 10 - 1
10 Tightening torques: Removing and installing the engine . . . . 10 - 11
10 Special Tool 9111/3 . . . . . 10 - 13
10 01 37 Disassembling and assembling engine . . . . . 10 - 17
10 10 Measuring and repairing the crankcase . . . . . 10 - 31
10 10 03 Measuring the crankcase . . . . . 10 - 33
10 10 49 Reworking and remaining . . . . . 10 - 35

13 Engine – Crankshaft, Pistons

13 01 Engine holder . . . . . 13 - 1
13 10 Identification of crankcase engine number and engine type . . 13 - 3
13 48 Crankshaft - Standard and Repair Dimensions . . . . . 13 - 5
13 40 02 Connecting rod weight groups . . . . . 13 - 7
13 13 37 Dismantling and assembling crankshaft . . . . . 13 - 9

Printed in Germany - 12. 1995

13 40 38	Dismantling and assembling connecting rods	13 - 10a
13 59 19	Removing and installing crankshaft oil seal	13 - 11
13 10 03	Measuring pistons and cylinders	13 - 15
13 10 37	Dismantling and assembling pistons and cylinders	13 - 17
13 10	Pistons	13 - 23
13 78 05	Checking and adjusting drive belts	13 - 29

15 Engine – Cylinder Head, Valve Drive

15 70 37	Dismantling and assembling cylinder head	15 - 1
15 59 04	Measuring valve lifters	15 - 7b
15 75 02	Checking valve guides	15 - 8a
15 75 56	Replacing valve guides	15 - 8b
15 62 04	Measuring the valves	15 - 8d
15 65 06	Checking and adjusting installed length of valve springs	15 - 8e
15 63 19	Removing and installing valve seal	15 - 8g
15 03 37	Dismantling and assembling camshaft housings	15 - 9
15 31 37	Dismantling and assembling chain housing with camshaft drive	15 - 15
15 05	Camshafts, timing	15 - 21
15 31 37	Determining parallelity of chain sprockets	15 - 23
15 05 06	Checking and adjusting camshafts	15 - 25
15 30 37	Dismantling and assembling intermediate shaft	15 - 31
15 20 01	Checking intermediate shaft	15 - 33
15 38 19	Removing and installing camshaft housing seal	15 - 35

17 Engine – Lubrication

17 26 38	Remove and reinstall pressure-regulating valve (Relief valve / Safety / valve)	17 - 1
17 10 30	Cleaning crankcase (oil pressure)	17 - 3
17 03 01	Checking oil pressure	17 - 5
17 00	Lubrication (Engine	
17 00	Lubrication (Engine oil circuit diagram)	17 - 7
17 37 37	Dismantling and assembling oil temperature regulator housing	17 - 9

2 Fuel, exhaust system, engine electrical system

20 Fuel Supply, Operation

20 02 01	Checking fuel pressure	20 - 1
20 66 01	Checking fuel pump delivery	20 - 3

24	**Fuel System, Electronic Injection**	
24 04	Test specifications	24 - 1
24 04	Checking idle speed and CO level (vehicle with cat. converter)	24 - 3
24 04	Checking idle speed and CO level (vehicle without cat. converter)	24 - 5
24 46 19	Removing and installing intake distributor (injection system components)	24 - 7
24 46 37	Dismantling and assembling intake distributor	24 - 11
	911 Carrera RS Varioram - injection system engine M 64/20	
24 00 01	Fuel system - checking vacuum system for leakage	24 - 19
	911 Carrera RS Varioram - injection system M 64/20	
24	Hose connection schematic -	
	911 Carrera RS Varioram - engine M 64/20	24 - 21
24	911 Carrera Varioram - injection system -engine M 64/21-24	24 - 21a
24 70 19	Removing and installing DME control unit	24 - 23
24 46 19	Removing and installing intake distributor	24 - 25
24	Checking components of injections system for leaks	24 - 31
26	**Exhaust System**	
26 01 55	Replacing exhaust system	26 - 1
27	**Starter, Power Supply, GRA**	
27 22 19	Removing and installing alternator	27 - 1
27 30 49	Adjusting belt tension for new V-belts	27 - 7
27 60 19	Removing and installing starter (manual transmission)	27 - 9
27 60 19	Removing and installing starter (Tiptronic)	27 - 11
27 82 01	Troubleshooting the cruise control's control unit	27 - 13
27 84 01	Troubleshooting the cruise control actuator	27 - 15
27 88 05	Checking and adjusting tie rod for cruise control	27 - 17

Printed in Germany - 16, 1996

Survey of contents of Service Information Technik '95

The Service Information gives a detailed description of the technical features of the new 911 Carrera.

	Rep. Gr.	Page
Engine		
General		1 - 1
Engine cross-sections	10	1 - 4
Full-load curve		1 - 6
Belt pulley	13	1 - 8
Pistons	13	1 - 10
Hydraulic valve lash adjuster	15	1 - 16
Setting the timing	15	1 - 18
USA - auxiliary air pump		1 - 19
Fuel and ignition systems		
General		2 - 1
DME - Schematic	24	2 - 2
Fuel - air flow	24	2 - 3
Exhaust gas flow	26	2 - 5
DME control unit 2.10.1	24	2 - 9
Mass air flow sensor	24	2 - 12
Throttle potentiometer	24	2 - 18
Ignition system	28	2 - 24
Plausibility test		2 - 28
Diagnosis		2 - 29
Auxiliary air pump	26	2 - 33
Power transmission		
Transmission	30	3 - 1
Clutch	30	3 - 2
Manual transmission	34	3 - 3
Transmission ratios		3 - 6
Gear set	35	3 - 8
Synchromesh	35	3 - 9
Final drive	39	3 - 13
Oil supply		3 - 15
Porsche Tiptronic	37	3 - 16
Modifications for the '95 model year		3 - 17

	Rep. Gr.	Page
Running gear		
General		4 - 1
Front axle	40	4 - 2
Steering	48	4 - 7
Rear axle	42	4 - 8
Elasto-kinematic toe correction	42	4 - 12
Coil springs (layout)	42	4 - 13
Wheels, tires	44	4 - 15
Suspension alignment	44	4 - 17
Brakes	47	4 - 20
Bleeding the brakes	47	4 - 23
ABS 5	45	4 - 24
Operation of the ABD	45	4 - 30
Diagnosis ABS/ABD	45	4 - 34
Body		
General		5 - 1
Constructional dimensions	50	5 - 4
Aerodynamics and air ducting	50	5 - 8
Body equipment		
Body equipment		6 - 1
Color scheme as of 1995 model year	60	6 - 1
Windows	64	6 - 8
Airbag system	68	6 - 14
Body - interior trim		
Body - interior trim	70	7 - 1
Seats	72	7 - 5
Heating, air conditioning, ventilation		
Particle filter	85	8 - 1
Air ducting	80	8 - 3
Heating - air conditioning unit	85	8 - 5
Heating - air conditioning unit	87	8 - 6
Series resistor of rear blower	80	8 - 9

	Rep. Gr.	Page
Electrical system		
Instruments	90	9 - 1
Alarm system/central locking system	90	9 - 3
Heated rear window	64	9 - 6
Central Information System (Z I)	91	9 - 7
Radio "Alpine 7807"	91	9 - 10
Sound package, DSP-System	91	
Windshield wiper and washer system	92	
Headlights	94	
Front end light cluster	94	
Tail lights	94	
Engine compartment baseplate	97	
Wiring diagram		
Summary		
Maintenance		0 - 1
Number ranges		0 - 4
Technical data		0 - 5

911 Carrera (993)

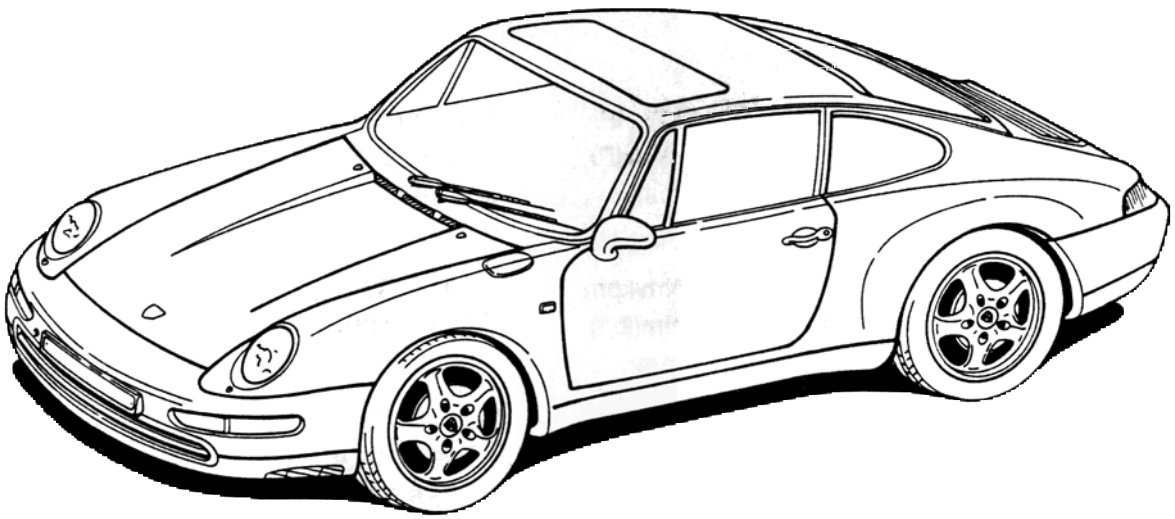

1624-03

Technical data

(Adjusting values and wear limits are included in the respective repair groups)

Note: U.S. values are given in brackets

Drive unit

Internal engine designation	Manual transm. Tiptronic	Row M 64 / 05 Row M 64 / 06	USA 07 USA 08
No. of cylinders		6	
Bore	mm/in.	100 (3.94)	
Stroke	mm/in.	76.4 (3.01)	
Displacement (actual)	c.c./cu.in.	3600 (219.7)	
Compression ratio		11.3 : 1	
Max. engine power to 80/1269 EEC Net Power, SAE J 1349 at engine speed	 kW/HP kW(HP) rpm	 200 / 272 200 (270) 6100	
Max. torque to 80/1269 EEC Net Torque, SAE J 1349 at engine speed	 Nm/kpm Nm(lbft) rpm	 330/33.6 330 (243) 5000	
Max. specific power output DIN 70020 SAE J 1349	 kW/l/HP/l kW/l (HP/l)	 55.6 / 75.6 55,6 (75,0)	
Rpm limiter, fuel cutoff at Idle speed Fuel octane rating	 rpm rpm RON/MON	 6700 800 ± 40 98/88	
Engine weight (dry, ready for fitting)			
Manual transmission	kg (lbs)	232 (511)	
Tiptronic	kg (lbs)	224 (494)	

Engine design

Type	6-cylinder four-stroke internal combustion engine with 2 horizontally opposed cylinder banks (flat engine)
Crankcase	Light-alloy, two-piece
Crankshaft	Forged, 8-bearing design
Main bearings	Friction bearings
Connecting rods	Forged
Big end bearings	Friction bearings
Pistons	Light alloy, pressed
Cylinders	Light alloy, individual cylinders
Cylinder head	Light alloy, individual cylinder heads with ceramic exhaust port liners
Valve guides	Press-fitted
Valve arrangement	1 inlet, 1 exhaust, suspended in V-design
Valve timing	One overhead camshaft each on right and left
Camshaft	Cast
Camshaft drive	Double chain
Valve clearance	Hydraulic lash adjustment
Timing for 1 mm valve lift and zero clearance	Inlet opens 1 degree BTDC Inlet closes 60 degrees ABDC Exhaust opens 45 degrees BBDC Exhaust closes 6 degrees ATDC
Induction system	With controlled tuning flap

Engine cooling

	Air-cooled system
Fan drive	Via V-belts from the crankshaft
Transmission ratio: Crankshaft to fan	approx. 1:1.60
Air delivery rate	1010 l / sec at 6,000 rpm of crankshaft

Engine lubrication

	Dry sump lubrication with separate oil tank
Oil cooling	Thermostatically controlled, front oil cooler in right-hand front fender, 2-stage electric fan
Oil filter	in return line
Oil pressure at n = 5,000 rpm	approx. 6.5 bar at 90° C oil temperature
Oil pressure indicator	0...5 bar, electric, and oil pressure warning lamp
Oil consumption	up to 1.5 l / 1000 km

Exhaust system

Twin-branch system, heat exchanger with joining of exhaust pipes outside of heat exchanger, twin-branch 3-way catalytic converter with Lambda control and central induction across mixing chamber, one muffler per exhaust line

Emission control

Lambda control with 3-way catalytic converter (metal carrier) or internal engine control

Heating

Engine-dependent hot air heating with additional electric fans and automatic temperature control

Fuel system

Type		DME (Digital Engine Electronics)
Fuel supply		1 electric roller cell pump

Clutch

Manual transmission		Single-plate dry clutch hydraulically operated double-mass flywheel
Thrust plate		G MFZ 240
Drive plate		rigid, dia. 240

Electrical system

Interference suppression		ECE-R 10 and 72/245/EEC
Battery voltage	V	12
Battery capacity	Ah	75
Alternator output	A/W	115/1610 A/C
Ignition		DME, dual ignition, knock control
Firing order		1 - 6 - 2 - 4 - 3 - 5
Ignition timing control		Via DME
Spark plugs		Bosch FR 6 LDC Bosch FR 5 DTC Beru 14 FR - 5 DTU
Spark plug gap	mm (in)	0.7 + 0.1 (0.026 + 0.004)

Body construction

Integral steel body, electrically extending rear spoiler, Coupé, optionally with sunroof, Cabriolet

Dimensions (at DIN curb weight)

		Row	USA
Length	mm (in.	4245 (167.1)	4260 (167,7)
Width	mm (in.)	1735 (68.3)	
Height	mm (in.)	1300 (51.2)	1315 (51,8)
	Sport chassis	1285 (50.6)	
Wheelbase (design)	mm (in.)	2272 (89.4)	
Front track	mm (in.)	1405 (55.3)	
Rear track	mm (in.)	1444 (56.9)	
Ground clearance	mm (in.)	110 (4.3)	120 (4,7)
(at gross vehicle weight)	Sport chassis	90 (3.5)	
Ramp angle			
(at gross vehicle weight)	degrees	13.0	
	Sport chassis	12.0	
Front overhang angle			
(at gross vehicle weight)	degrees	11.0	
	Sport chassis	10.5	
Rear overhang angle			
(at gross vehicle weight)	degrees	12.5	13,1
	Sport chassis	11.5	

Weights to DIN 70020 (manual transmission)

Total curb weight	kg	1370	
Curb weight to			
70/156/EEC	kg	1445	
Gross vehicle weight	kg	1710	1690
Max. front axle load	kg	720	
Max. rear axle load	kg	1065	
Max. roof load including	kg/lbs	75 (165) with	
roof rack		original Porsche	
		roof transport system	

Capacities

Engine	Use only approved engine oils. Refer to Technical Information Handbook
Engine oil capacity	Approx. 11.5 l (approx. 9 l for oil change) Determined by measurements with oil dipstick as per Owner's Manual
Manual transmission with differential	3.6 l
Tiptronic with torque converter	approx. 9 l
Differential	0.9 l
Fuel tank	approx. 71 l (approx. 10 l reserve)
Brake fluid reservoir	approx. 0.34 l
Washer fluid for windshield and headlights	approx. 7.3
Power-assisted steering	approx. 1.0 l ATF (Dexron)

Performance (manual transmission)

Top speed	km/h / mph	270 (168)
Acceleration from 0 to 100 km/h	s	5.6
Kilometer from standing start	s	25.1

Hill climbing

	Manual transmission	
In %	1st gear	75%
	2nd gear	51%
	3rd gear	33%
	4th gear	23%
	5th gear	16%
	6th gear	11%

Raising the vehicle

The vehicle may only be raised at the jacking points illustrated. When driving the vehicle onto a lifting platform, make sure that there is sufficient clearance between the platform and the vehicle.

Front

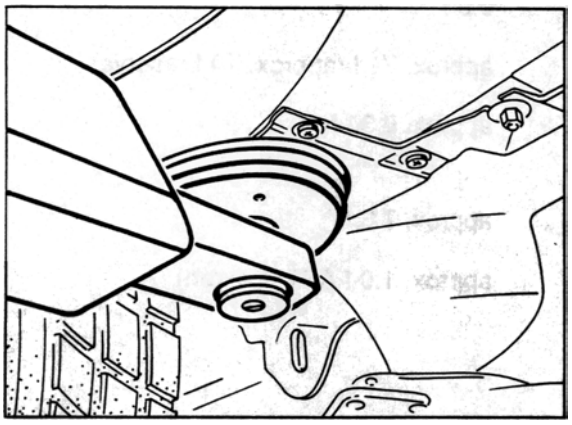

1421-03

Rear

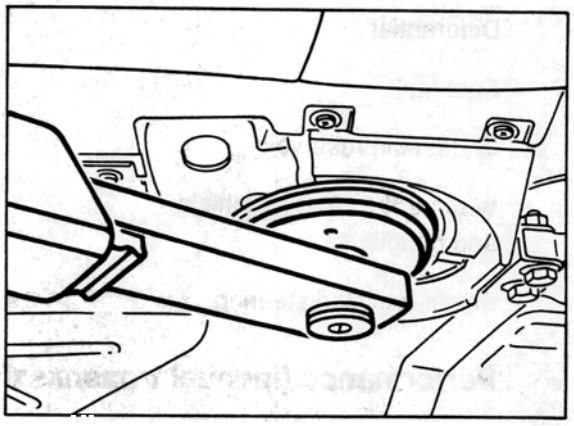

1422-03

Service every 20,000 km	Page
Diagnosis system: read out fault memory	1
Change engine oil	
Air cleaner: replace filter element	
Particle filter: replace filter element	
V-belt or Polyrib belt: check condition and tension	
Replace spart plugs (only on vehicles without catalytic converter)	
Visual check for leaks: oils and fluids	
Crankcase ventilation: check tightness of hose connections	
Fuel system: visual inspection for damage, routing and tight fit of line and hose connections	
Intake air system: check hoses, lines and connections for tight fit	
Parking brake: check free travel of parking brake lever	
Brake system: visual check of brake pads and brake discs for wear	
Brake hoses and pipes: visual check for damage, routing and corrosion	
Clutch: check free travel and pedal end position	
Throttle actutator: check for smooth operation and full-load position	
Check operation of resonance flap	
Steering gear: visual check of rubber bellows for damage. Tie rod joints: check play and condition of dust caps	
Power steering: check fluid level	14
Ball joints: visual inspection of dust caps for damage. Check bolt connections of front and rear suspension alignment for tight fit	
Transmission / final drives: check oil levels	15
Automatic transmission: check ATF fluid level	
Drive shafts: visual inspection of bellows for leaks and damage	
Exhaust system: visual inspection for leaks and damage, check fitting	
Tires: check condition and tire pressure	
Door hinges: lubricate with oil	
Check door and hinge locks and safety hook of front hood for tightness and operation	
Seat belts: check operation and condition	
Seals of doors, hoods and roof: remove rubber abrasions. Apply suitable lubricant.	
Check operation of vehicle lighting. All headlights: check adjustment. Signal hom: check operation	
Windshield washer system, headlight cleaning system: Check fluid level and nozzle adjustment, check antifreeze content in winter season	21
All other electrical systems, monitor lamps and warning lamps: check operation	21
Ignition circuits 1 and 2: check operation	
Test drive: Brake pedal and parking brake, clutch, automatic speed control, steering, heater, air conditioning and instruments: check operation	
Visual inspection for leaks: oils and fluids	22

Additional service every 40,000 km	Page
Automatic transmission: change ATF and ATF filter	23
Toothed belt for power steering: check condition	
Replace spark plugs (only for vehicles with catalytic converter)	
Replace both engine oil filters	

Additional service every 80,000 km	
Replace fuel filter	30
Manual transmission / final drives: change oil	
Automatic transmission: change oil in final drive	

Yearly service – starting after the first 2 years	
File Status Report for Long-life warranty	

Service every 3 years	
Change brake fluid (use only genuine Porsche brake fluid)	31

Service every 4, 8, 10 years and then every 2 years	
Check airbag system see page 68 - 20	

Recommended annual service	
Visual inspection for leaks: oils, fluids	
Diagnosis system: read out fault memory	
Parking brake: check free travel of parking brake lever	
Brake system: visual check of brake pads and brake discs for wear	
Check brake fluid level	
Steering gear: visual inspection of bellows for damage Tie rod joints: check play and condition of dust caps	
Ball joints: visual inspection of dust caps for damage	
Drive shafts: visual inspection of bellows for leaks and damage	
Exhaust system: visual inspection for leaks and damage, check fitting,	
Tires: check condition and tire pressure	
Seals of doors, hoods and roof: remove rubber abrasions. Apply suitable lubricant.	
Check operation of vehicle lighting.	
Windshield washer system, headlight cleaning system: Check fluid level and nozzle adjustment, check antifreeze content in winter season.	
Battery: Check electrolyte level and electrolyte density	30
All other electrical systems and monitor lamps and warning lamps: check operation	
File Status Report for Long-life warranty (first report after 2 years)	
Test drive: Brake pedal and parking brake, clutch, automatic speed control, steering, heater, air conditioning and instruments: check operation	
Visual inspection for leaks: oils and fluids	

03 20 00 Maintenance

Diagnosis system:

Reading out the fault memory

The procedure for reading out the fault memory is described in the operating instructions for System Tester 9288. A copy of the operating instructions is supplied with each tester.

The System Tester 9288 is connected to the vehicle via a 19-pin socket. The socket is located in the passenger footwell next to the glove box.

Also refer to Repair Group 03, Diagnosis, for operating instructions, repair group D, volume 8 diagnosis.

Starting with Model Year '95, the diagnostic socket is located on the left-hand side of the center console and is fitted with a plugged-on cover

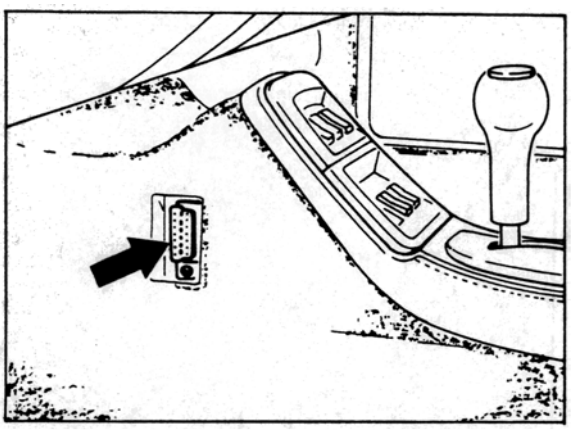

1967-03

Changing engine oil (without filter)

Precondition: Engine at operating temperature (70...90° C oil temperature)

1. Remove engine guard and right-hand side member panel. Undo the drain plugs in the crankcase and thermostat housing and drain engine oil.

Crankcase drain plug

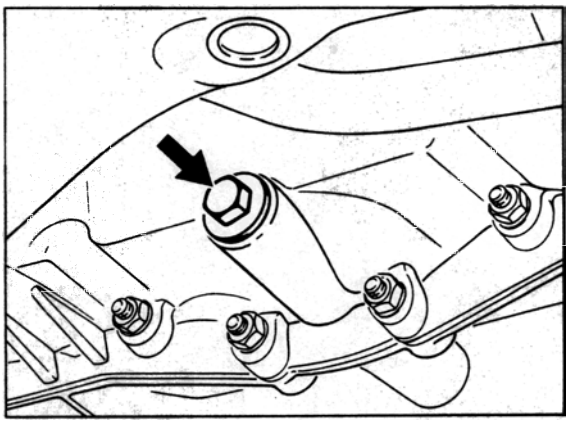

605-03

Thermostat housing drain plug

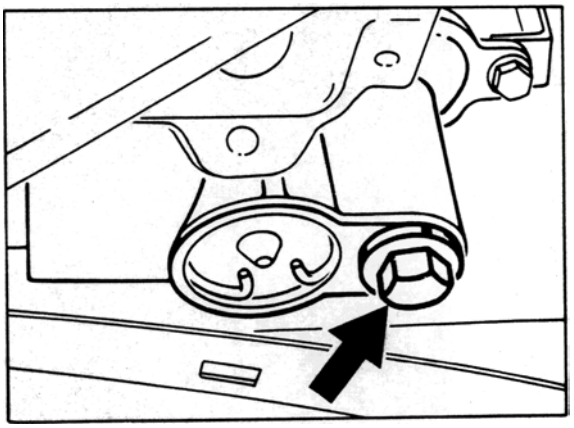

1454-03

2. Clean drain plugs. Always replace the seals. **Tightening torque of drain plugs is 50 Nm (37 ftlb.):**
   at the thermostat housing
   50 + 5 Nm (37 + 3.7)
   at the crankcase 50 + 5 Nm (37 + 3.7)

3. Fill with approx. 6 liters of engine oil. Run engine at idle and top up with approx. 3 liters. The oil change capacity is approx. 9 liters. Use only approved engine oils. Refer to Technical Information Handbook.

Check oil level at operating temperature and at idle speed (refer to Owner's Manual). Check engine, oil reservoir, lines and front oil cooler for leaks (visual inspection)!

Air cleaner:

Replacing the air cleaner element

1. Unhook clamps and lift off housing cover.

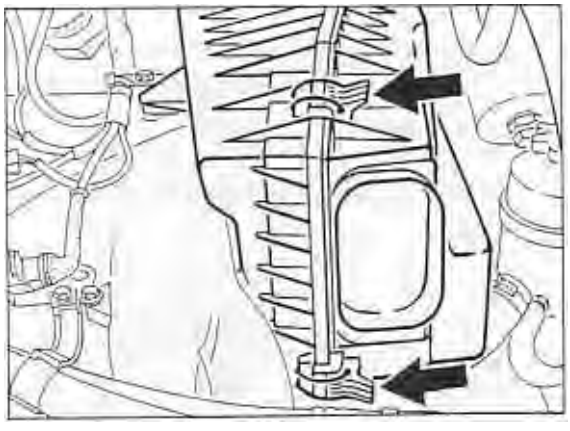

1417-03

2. Take out filter element and clean filter housing with a lint-free cloth.

3. Fit new filter element.

Check hose connections of entire intake system for tight fit!

Particle filter:

Replacing filter element

Note

The particle filters are fitted on the left and right-hand sides in front of the heater/air conditioning housing.

Removal

1. Remove cover for heating and air conditioning system. Screw out knurled nut and disengage retaining clamps from housing cover using a screwdriver. Lift off housing cover.

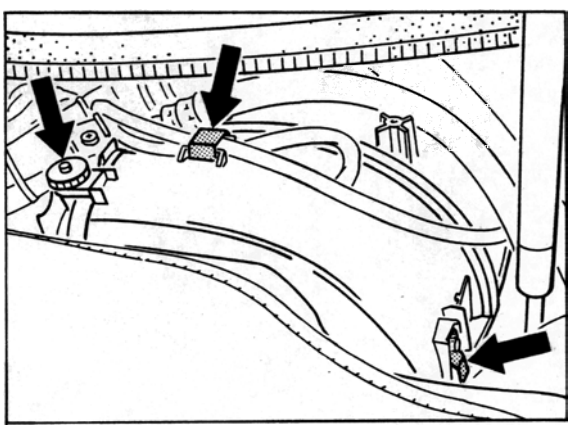

1469-03

2. Take particle filter out of housing duct from above.

Installation

1. Place particle filter into housing duct. Assembly mark faces up.

2. Fit housing cover into housing duct from above and align with assembly mark of particle filter (refer to Fig.).

Fig. shows rear of particle filter and housing cover

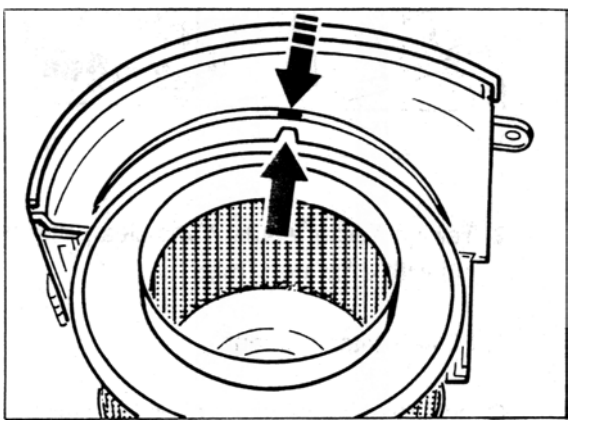

1470-03

3. The assembly mark of the particle filter is visible from outside in the housing cover.

Checking and/or adjusting alternator, fan wheel and air conditioning compressor drive belts

Caution: Make sure the ignition key is pulled off whenever measurements are made.

Checking used drive belts (alternator and fan wheel)
Use belt tension measuring instrument (Special Tool 9574) to check tension.

A description of how to use the Special Tool is contained in Repair Group 13, page 13 - 30.

Retensioning the belt is only required if the belt tension displayed at the measuring instrument is less than 15 scale increments when the engine is cold and less than 20 scale increments when the engine is hot.

Retensioning the belts

Retension belts as described in the General Adjustment Notes section.
Before measuring the belt tension, start engine and let engine idle briefly.

Tension:

Cold engine:	15 to 23 scale increments
Engine at operating temperature:	20 to 28 scale increments

Fitting a new belt (alternator and fan wheel)
When fitting a new belt, be sure to observe the correct **assembly sequence** in order to avoid any loss of belt tension during vehicle operation.

1. Fit new belt. Adjust tension by inserting or removing shims as required.
   Shims are available for belt tensioning in thicknesses of 0.5 mm and 0.7 mm. The 0.7 mm shim is identified by a 2 mm dia. drill hole.

2. Before measuring the belt tension, start engine once more and run engine at idle briefly.

   Tension:
   Cold engine: 23 to 35 scale increments

3. Run engine at idle for approx. 15 minutes or test drive vehicle for approx. 10 miles.
   Check tension again.
   Specification: 28 to 40 scale increments
   Retension if required.
   Test requirement: Engine at operating temperature

Adjustment specifications for A/C compressor drive belt

Specification: 30 to 35 scale increments
Retension if required.

General adjustment notes

Fan wheel and alternator have separate drives.

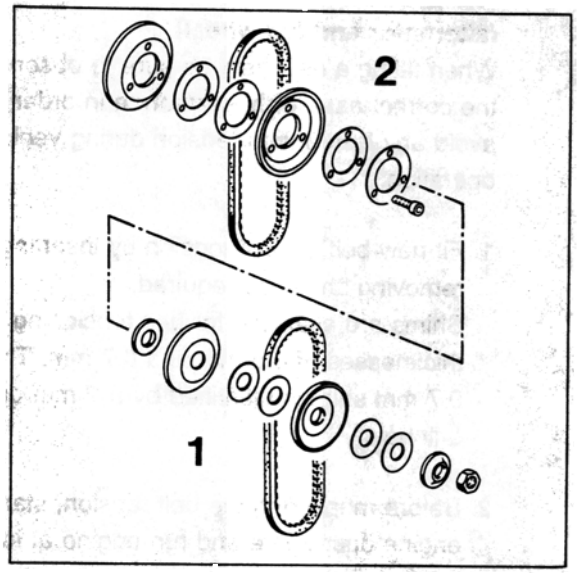

1863-27

1 = Alternator drive components
2 = Fan wheel drive components

Adjusting the V-belts

1. Use polygon wrench (999 571 052 02) to lock shaft and undo hexagon head nut. Remove shims and pulley half.

2. If belt tension is below specification, remove one shim from between pulley halves and refit in front of front pulley half. Tighten hexagon head nut to 50 ± 5 Nm.

3. Three additional M 6 screws have to be undone for V-belt and fan wheel.

4. Use only V-belts that have been approved by the manufacturer.

Note

Rotate engine only at lower belt pulley or by operating the starter. After completing all operations, check to make sure that hexagon head nut has been tightened sufficiently on alternator shaft.

Replacing spark plugs

(Remove both rear mufflers)

1. Remove engine guard. Remove ball clamps from tailpipe and rear muffler / catalytic converter and take out hexagon head bolts. Remove both tailpipes.

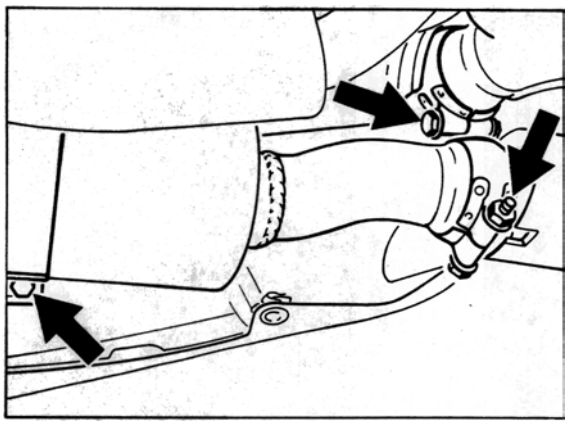

1441-03

1. Undo rear muffler at tightening strap and lift off rear muffler. Remove rear muffler bracket.

3. Undo hot-air hose from right-hand heat exchanger (cyls. no. 4 to 6) and from air distributor pipe and take off hose.

4. Undo both left and right-hand engine covers from camshaft housing, hydraulic pump support bracket as well as front and rear engine cover. Leave engine cover suspended at ignition cables.

5. If spark plugs are difficult to remove, use Special Tool (disassembly clamp) 9513, Part No. 000.721.951.30.

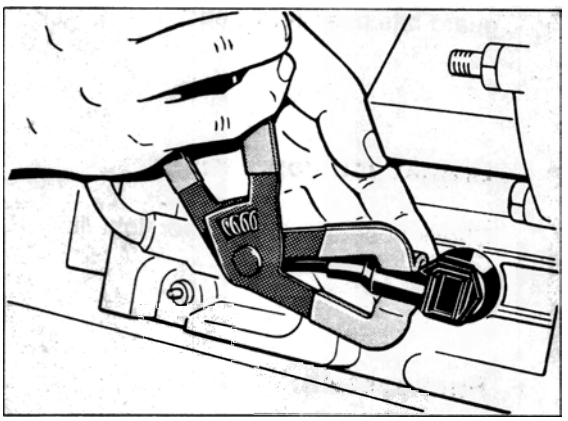

498-03

6. Unscrew spark plugs with commercially available Snap-on socket, Part No. S 9706, and Snap-on extension, Part No. FXW 4.

Note

Do not use any lubricant on the plug threads.

Visual inspection for leaks:

Oils, fluids
This check can be carried out after the engine guard has been removed.

Crankcase ventilation:

Check hose connections for tight fit.

Fuel system:

Visual inspection for damage, correct routing and tight fit of line connections.

Intake air system:

Check that hoses, pipes and connections are securely fitted.

Parking brake:

Check free travel of the parking brake lever

The parking brake is fitted with asbestos-free brake linings. The parking brake must **never be adjusted in such a way** that the lining has to "grind itself free" in operation.

If the brakes do not show any effect when the parking brake lever is pulled up by more than 4 notches using medium force, the parking brake must be readjusted.

Adjusting the parking brake:

1. Remove rear wheels.

2. Release parking brake lever and push back disc brake pads until the brake disc rotates freely.

3. Undo the adjusting nuts on the turnbuckle (arrow) until the cables are slack.

Note

Remove the cassette box behind the parking brake lever to gain access to the turnbuckle. The fastening screw is located below the rubber insert.

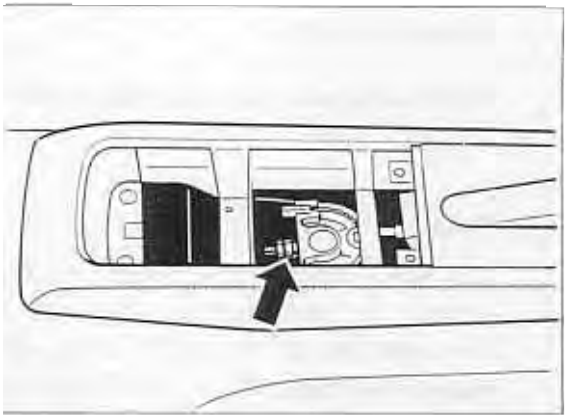

576-46

4. Insert a screwdriver across the hole in the brake disc to reset the adjuster until the wheel is locked. Then undo the adjuster again until the wheel can be rotated freely. *Now undo by a further two notches.*

5. Pull up parking brake lever by two notches and turn adjusting nut on the turnbuckle until both wheels can just barely be rotated by hand.

6. Release parking brake lever check if both wheels rotate freely.

Brake system:

Visual inspection of brake pads and brake discs for wear

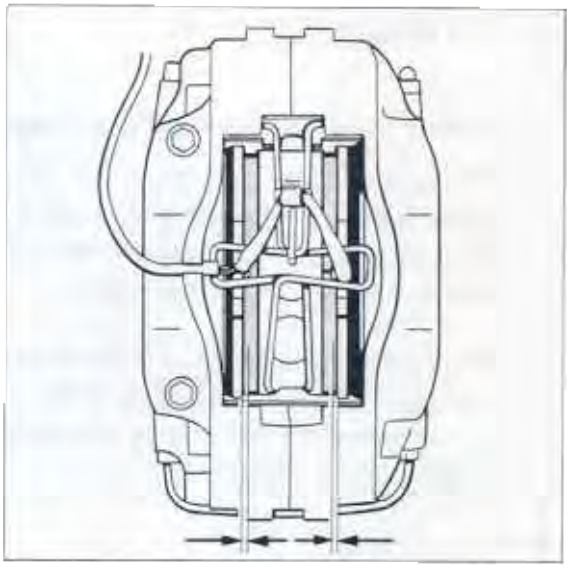

578-46

Note

The brake pads must be replaced on both sides of one single axle as soon as the brake pad wear warning lamp lights up or, at the latest, when the pads have worn down to a thickness of 2 mm. If pad wear is indicated by the wear warning lamp, the warning contact (sensor complete with wire and connector) must be replaced. Replacement of the warning contact(s) can be avoided by replacing the brake pads at the latest when they are worn to a thickness of 2.5 mm. Warning contacts must be replaced if the wire core is exposed. Replacement is not necessary, however, if rubbing wear is limited to the plastic part of the warning contact only.

1. Remove rear wheels to check rear brake pads.
   The front brake pads are visible with the wheels fitted.

2. Check brake pads visually for wear.

The wear limit is reached as soon as the remaining pad thickness is down to 2 mm.

Brake hoses and pipes:

Visual inspection for damage and routing (corrosion)

Checking the brake fluid level

Top up brake fluid if required (refer to marks on reservoir).
Never top up beyond the MAX mark as this may cause brake fluid to escape past the bleed hole.

Important information about the brake fluid

Use only new brake fluid DOT 4.
Observe brake fluid quality.

The brake fluid DOT 4 Type 200 (change interval 3 years) used until now is **no longer available** via the Porsche Parts Service.

"**Super DOT 4**" brake fluid will be delivered instead. **A 2-year change** interval applies to this brake fluid.

Vehicles with brake systems containing the old type of brake fluid must be filled **with Super DOT 4** the next time a brake fluid change is due.

This brake fluid is available under the following part number:
Container size 1 litre = 000.043.203.**66**
Container size 30 litres = 000.043.203.**67**.

Miscibility of brake fluids:

The brake fluid DOT 4 Type 200 used until now is miscible with Super DOT 4. This means that **Super DOT 4** can be used to top up the brake fluid-level in vehicles with brake systems containing the old type of brake fluid until the next time a brake fluid change is due. Both brake fluids are coloured amber.

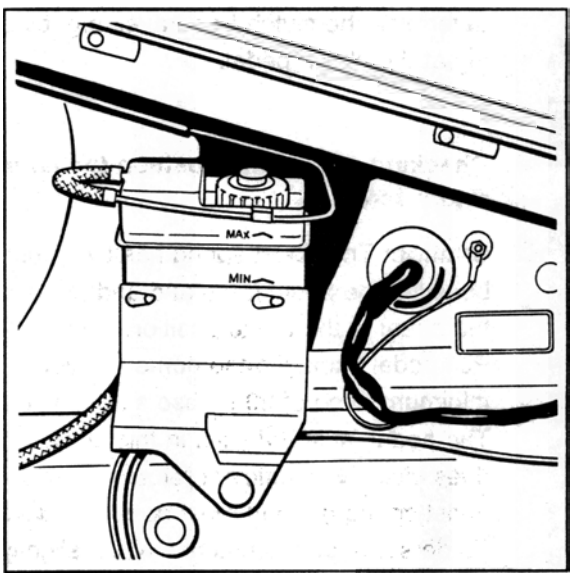

Clutch:

Checking free travel and final position of the pedal

Clutch free travel

The clutch master cylinder has an internal stop. The boost spring forces the pushrod or the clutch pedal, respectively, constantly against this stop. Due to this automatic hydraulic adjustment, it is not possible to determine the clutch free travel, e.g. by checking at the clutch pedal.

Checking pedal final position (pedal return/ return force)

Caution: The boost spring has two functions: boosting the pedal force and and returning the pedal to the home position.
Pull pedal back into the home position with a minimum force of 30 N (use a spring scale). The pedal must not yield in this position. If it does yield (= insufficient return force), the boost spring preload must be reduced slightly. To do so, undo Allen screw **No. 1** slightly until a correct tradeoff between return effect and pedal force boost is obtained.

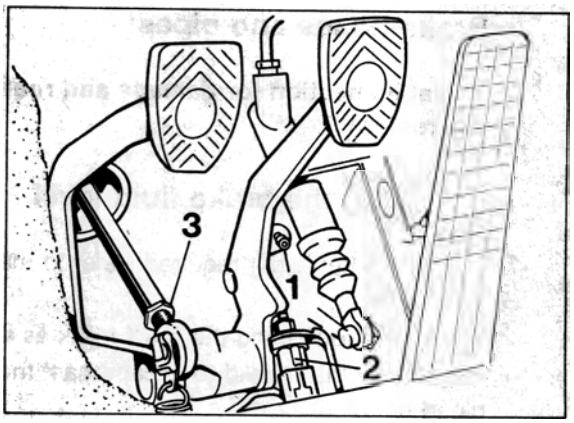

1452-46

Note

To ensure correct clutch operation, the following items must be observed, among others, when the pedals are adjusted:

Correct bleeding of hydraulic clutch circuit

Tightness of hydraulic system

Correct adjustment of boost spring

Pedal return into home position

Pedal travel stop provided by correctly adjusted floorboard stop
(pedal travel 150 + 5 mm)

Installation position of pedal assembly matches standard specifications.

Throttle operation:

Check for smooth operation and correct wide-open position.

Checking resonance flap for operation

When the ignition is switched on, the resonance flap is closed by vacuum action. When the ignition is switched off, the resonance flap is opened (rest position). The opening and closing noise is audible in the engine compartment.

Steering gear:

Checking the bellows for damage

Tie rod joints:

Checking for play and condition of dust seals

Check that joints, dust seals and bellows operate correctly and that the dust seals and bellows do not leak.

The rubber dust seals and bellows at the steering gear and tie rods can be damaged by outside impacts, e.g. stone chip damage or during assembly. If the dust seals leak, the joint or the respective tie rod must be replaced as ingress of dirt or moisture will lead to destruction of the joint.

Power steering:

Checking fluid level

The reservoir is located on the right-hand side in the engine compartment. Check the level* with the engine idling and without operating the steering.

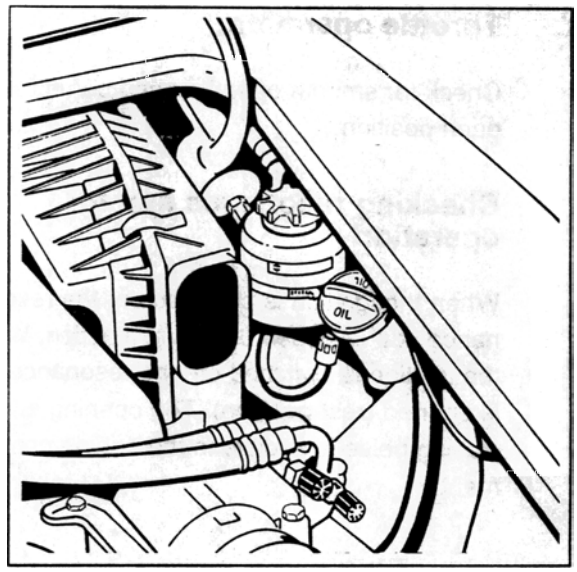

1472-48

Correct fluid level:

In the case of reservoirs **with** a transparent upper section (first version used), the fluid level must be between the min. and max. marks on the reservoir.
If the reservoir does **not** have a transparent upper section, the level must be between the two marks on the dipstick attached to the lid. Unscrew the lid and wipe the dipstick clean. Screw the lid back on, remove it again and check the fluid level*.

Note on toothed belt for power steering pump

The tension of the toothed belt cannot be adjusted but its condition must be checked.

Porsche started to fill the brake systems with Pentosin CHF 11S (green) in March 1996. ATF was used before the Pentosin and ATF are miscible. This means that Pentosin can be used to top up the fluid level in 993 vehicles before the aforementioned introduction date. On vehicles with Pentosin filling, always fill or top up the brake system with Pentosin.

Axle joints:

Visual inspection of dust seals for leaks

Check dust seals of axle joints (ball joints) of front and rear suspension as follows:

Place vehicle on lifting platform with steering lock unlocked.

After cleaning the components, check condition visually. Press rubber dust seals with the fingers to detect any hidden cracks.

Proceed as follows on front axle:
Turn front wheels to full lock. Visually inspect visible surfaces on left and right-hand surfaces.

After turning the front wheels to the opposite full lock, check the other half of the rubber dust seals.

Notes

Visual inspections are not possible in a small area around the brake cover panels. Check this area by feeling with your fingers.
If the rubber dust seals leaks, the joint or the respective steering arm must be replaced as ingress of dirt or moisture will lead to destruction of the joint.

Suspension alignment (wheel alignment specifications):

Check bolt connections of front and rear suspension geometry (wheel alignment) for tight fit.

Transmission / final drive:

Visual inspection for leaks, checking oil levels

For further notes, refer to page 03 - 16.

Checking ATF fluid level

The specified fluid level is of great importance for proper operation of the automatic transmission.

Test requirements:

Transmission guard is removed

Vehicle must be on a level surface

Engine is idling

Parking brake is pulled

Selector lever is set to "P"

ATF temperature 80°C

The ATF fluid level must be between the MIN and MAX marks at a temperature of 80°C.

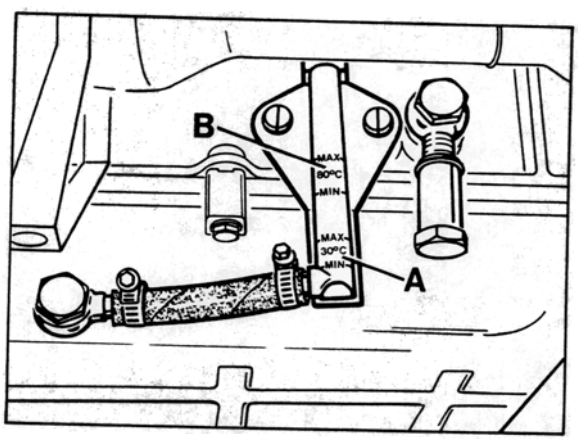

389-38

A = Testing range at 30°C ATF temperature
B = Testing range at 80°C ATF temperature

The ATF temperature may be determined precisely with System Tester 9288.

If required, top up with ATF fluid across the quick-fill device.

Drive shafts:

Visual inspection of cup seals for leaks and damage

Exhaust system:

Visual inspection for leaks and damage, check bolt connections for tight fit and examine mountings

1. Check exhaust system for tight fit and complete exhaust system for leaks. Check mountings of exhaust system.

2. Check that connection at heat exchanger/ cylinder head bolt union is tightened correctly.

3. Check all flange connections of exhaust system as well as oxygen sensor and emission test plugs for proper tightening.

Tightening torques:

1 - Heat exchanger to cylinder head 23 Nm (17 ftlb.)
2 - Heat exchanger to catalytic converter 23 Nm (17 ftlb.)
3 - Ball flange clamps 25 - 30 Nm (18 - 22 ftlb.)
4 - Strap for catalytic converter or front muffler 20 Nm (15 ftlb.)

Tires:

Checking tire condition and tire pressure

Tire condition

Tires are safety-relevant items that are only capable of meeting the requirements imposed if they are run at the correct tire pressure and with sufficient tread depth.

The tire pressures indicated are minimum pressures. The tires must never be run at lower pressures since this affects roadholding and may lead to severe tire damage.

Valve caps protect the valve against dust and dirt and therefore help prevent leaks. Always screw on caps tightly and replace missing caps.

For safety reasons, do not limit tire checks to checking the tire pressure but also check for sufficient tread depth, ingress of foreign matter, pinholes, cuts, tears and bulges in the sidewall (cord breakage!)!

Tire pressure of cold tires (approx. 20°C)

911 Carrera / 911 Carrera S / 911 Carrera 4 / 911 Carrera 4S

16-inch and 18-inch wheel
(16-inch and 18-inch wheels (summer tires 16-inch winter tires)

front	2.5 bar exc. pressure
rear	3.0 bar exc. pressure

17-inch wheels (summer and winter tires)

front	2.5 bar exc. pressure
rear	2.5 bar exc. pressure

Collapsible spare tire

front/rear	2.5 bar exc. pressure

911 Carrera RS (M 002 / M 003)

M 002 = basic version /
M 003 = Clubsport verion

Summer and winter tires

(Winter tires = 17-inch wheels
summer tires = 18-inch wheels)

front	2.5 bar
rear	3.0 bar

Folding spare wheel

front / rear	2.5 bar

Oiling door hinges

Check door and hood locks and safety catches of front hood for secure fit and correct operation

Checking for secure fit:

The fastening screws of the door lock, front and rear hood locks as well as the fastening nuts for the upper lock sections of the front and rear hoods must be tightened to 10 Nm (7 ftlb.).

Functional check:

Door lock

When the door is closed, the door lock must engage into the lock striker in two stages and disengage again when the door opener (inside and outside) is operated.

Front and rear hood locks.

When the hoods (front and rear) are closed, the hood locks must engage as soon as the upper lock sections move into their seats and must disengage again when the hood release is pulled.

Safety catch - front hood

After the hood lock has been released, the front hood must be held down by the safety catch. At the same time, this safety catch must engage into the retaining plate at its lowest point.
When the hood is open, the retractor spring must pull the safety catch back to the stop against the baseplate of the upper lock section.

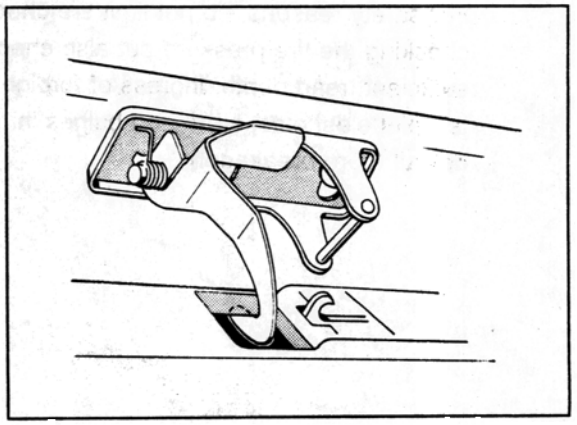

145-03

Seat belts:

Checking operation and condition

Operational check:

When the belt is pulled evenly, the belt strap must roll smoothly off the belt retractor across the guide fitting, and the plug-in latch of the seat belt must engage audibly into the lock. The seat belt retractor must lock if the belt strap is pulled with a jerk.

Check of belt condition:

The belt strap must be inspected visually for damage. If damage such as cuts, fraying, separating seams etc. is found, the seat belt must be replaced.

Seals for doors, hoods and roof:

Remove scuffed rubber, apply a suitable protective coating to seals

Cleaning:

Remove rubber scuffings and stains with benzine.

Care:

Coat seals with glycerine, talcum powder or a similar rubber care product.

Checking operation of lighting system:

Adjusting headlights

1. Open trunk lid.

2. Remove trunk mat from wheel housing wall.

3. Open cover for headlight adjusting screws.

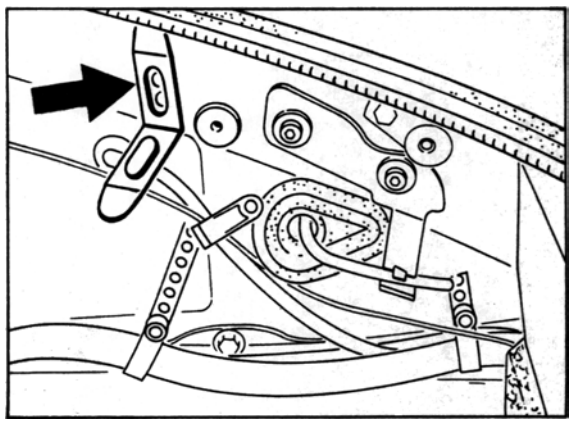

1586-03

4. Clean lens and switch on dipped beam.

5. The vehicle must be placed on a level surface. Using a headlight aiming device, adjust headlights with vehicle in roadworthy condition (full fuel tank, driver's seat occupied or loaded with 75 kgs, tires inflated to correct pressure).

Note

Adjust headlights with control switch set to the 0 position. (headlight beam adjuster).

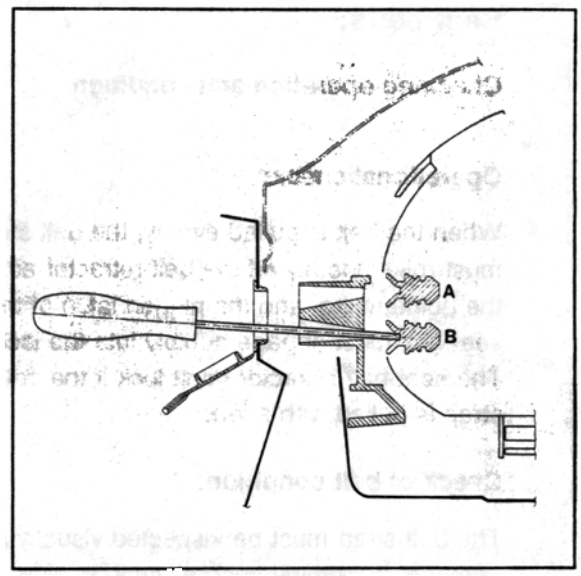

1585-03

A - Lateral and vertical adjustment
B - Vertical adjustment

Use a standard 5 mm ball socket screwdriver for adjustment.

Adjusting headlights (U.S.A. version)

Note

To comply with legal requirements, a bubble level (A) well visible from outside is fitted to the reflector at the bottom of the headlight. This bubble level is used to adjust the headlights and check the height adjustment.
To allow the side adjustment to be checked, an adjustable slide (B) is fitted to the side of the reflector. This slide is factory-set to the "zero adjustment mark" after the headlight has been adjusted.

The Fig. shows the headlight with the glass removed

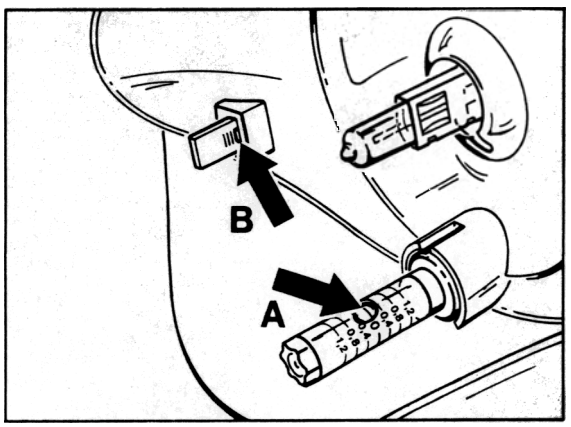

1780-03

Adjustment:

1. The vehicle must be placed on a level surface. Adjust with the vehicle in roadworthy condition (full fuel tank, driver's seat loaded with one person or 75 kgs, tire pressure meets specifications) using a headlight adjuster.

Note

Set headlight adjuster to 10cm/10m.

2. Rotate upper adjustment thumbwheel (side and height adjustment, refer to p. 03 - 20, Fig. No. 1585-03 A) until the upper light/dark cutoff of the low beam light area is in the center of the diagram shown.

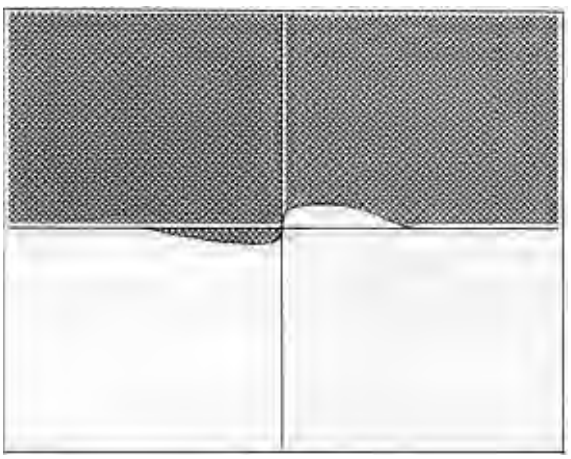

1781-03

3. Rotate lower adjustment thumbwheel (height adjustment, Fig. No. 1585-03 B) until the bubble inside the bubble level is in the "O" position. At the same time, the light/dark cutoff line must line up with the horizontal line on the left and right side.

4. Repeat items 2 and 3 if required.

Note

The side adjustment of the headlights is marked by the adjustable slide.
This zero adjustment mark is factory-preset and must not be altered.
Readjustment should be limited to **accident repairs or replacement of headlight assemblies**.

Adjusting the zero adjustment mark:

1. After having completed the headlight adjustment, unlock headlight inside luggage compartment and lift out headlight.

2. Turn adjustment screw of slide (for checking the side adjustment) with "Torx Tamper Resistent T 40" special tool until the "zero adjustment mark" lines up with the reflector.

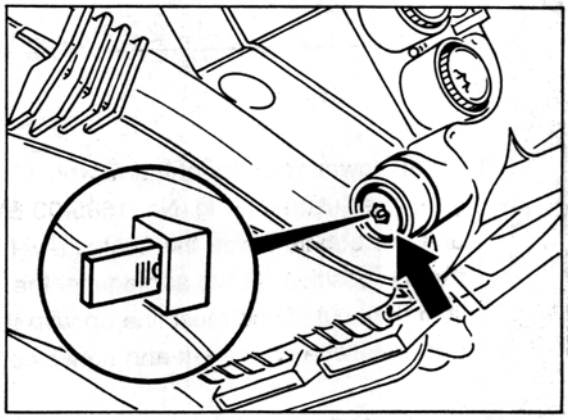

1782-03

3. Refit headlight.

Adjusting foglamps

1. Using a headlight aiming device, adjust headlights with vehicle in roadworthy condition (full fuel tank, driver's seat occupied or loaded with 75 kgs, tires inflated to correct pressure).

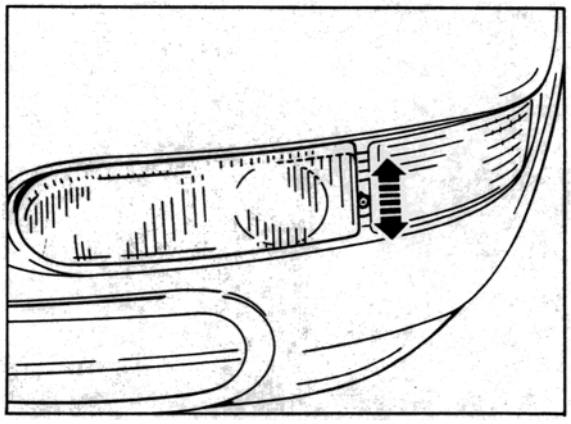

1587-03

Windshield washer, headlight washer system:

Checking operation, fluid levels and nozzle adjustment

Note

The headlight washer nozzles are preadjusted. No correction is required.

Check operation of all other electrical devices as well as warning and hazard lamps

Ignition circuit 1 and 2:

Checking operation

1. Measure CO and HC values with engine at operating temperature and both ignition circuits in operation.

2. Use System Tester 9288 to switch off ignition circuit 1.

3. Measure CO and HC value.

4. Switch ignition circuit 1 back on and switch off ignition circuit 2.

5. Measure CO and HC value.

The CO and HC values must not change significantly when the engine is running with only one ignition circuit.

Test drive:

Check operation of service and parking brake, clutch, automatic speed control, steering, heater, air conditioning and instruments.

Visual check for leaks:

Oils and fluids

It is recommended to run a test drive once with the engine guard removed to allow the engine and transmission to be checked for leaks and to avoid any additional assembly work if leaks are detected.

Do not exceed a vehicle speed of 95 mph.

03 80 00 Additional service

Replacing ATF fluid and ATF strainer

Filling capacity: approx. 9.0 l
Oil change capacity: approx. 3.0

Oil grade:
ATF-Dexron II D

Tightening torques:

ATF strainer to control unit	=	8 Nm (6 ftlb.)
ATF pan to transmission	=	6 Nm (4 ftlb.)
Drain plug to ATF pan	=	40 Nm (29 ftlb.)
Banjo bolt to ATF pan	=	40 Nm (29 ftlb.)

When changing the ATF fluid, the vehicle must be on a level surface, the engine must be stopped and the transmission guard must be removed.

Removing ATF pan and ATF strainer:

Drain ATF fluid.

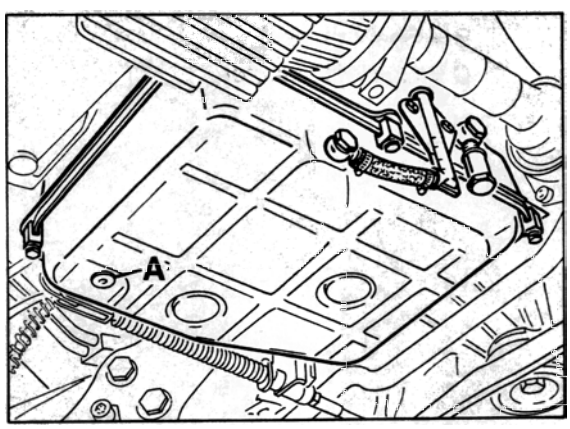

386-38a

A = Drain plug with seal

Remove ATF pan by undoing banjo bolt for oil level pipe and six mounting bolts.

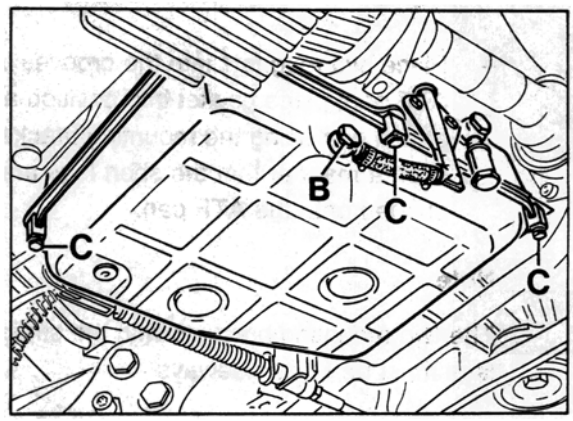

386-38b

B = Banjo bolt
C = Mounting bolts

Remove ATF strainer with Torx insert T 27.

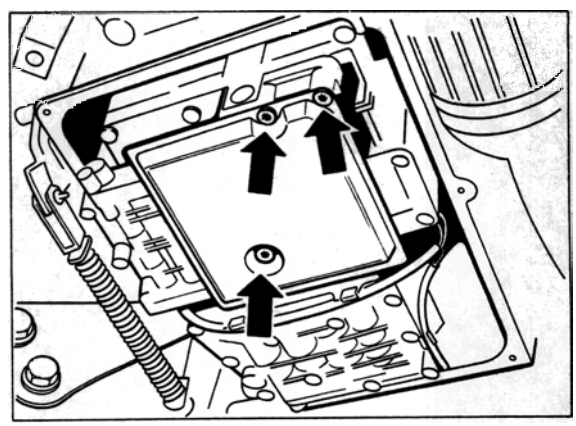

382-38

Installing ATF strainer and ATF pan:

Clean ATF pan thoroughly.

Fit ATF strainer with new O-ring. Tightening torque: **8 Nm (6 ftlb.)**.

Place two magnets into the grooves in the ATF pan, place gasket into position and attach pan using the mounting brackets in such a manner that the short legs are pushed onto the ATF pan.

Note

The two mounting brackets with the straight legs must be fitted sideways.

Screw in ATF drain plug with new seal. Tightening torque: **40 Nm (29 ftlb.)**.

Screw in banjo bolt for oil level pipe complete with new seals. Tightening torque: **40 Nm (29 ftlb.)**.

Filling in ATF fluid:

With the engine stopped, start by filling in ATF fluid up to the 30°C Max mark across the quick-fill adapter.

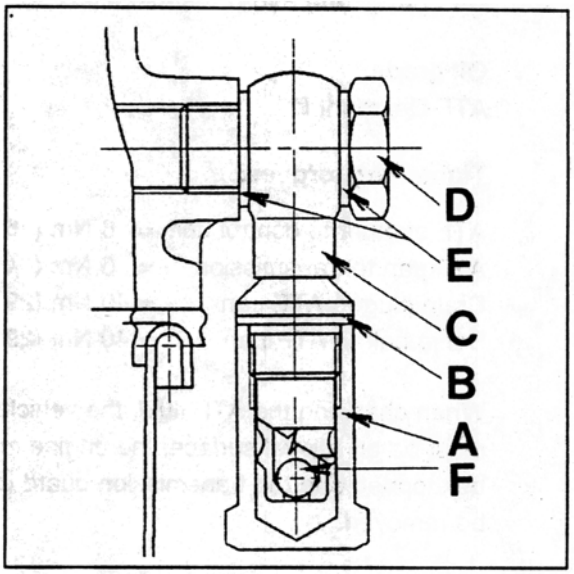

391-38

A = Plug nut
(Tightening torque 30 Nm, 22 ftlb.)
B = Seal (replace)
C = Quick-fill adapter

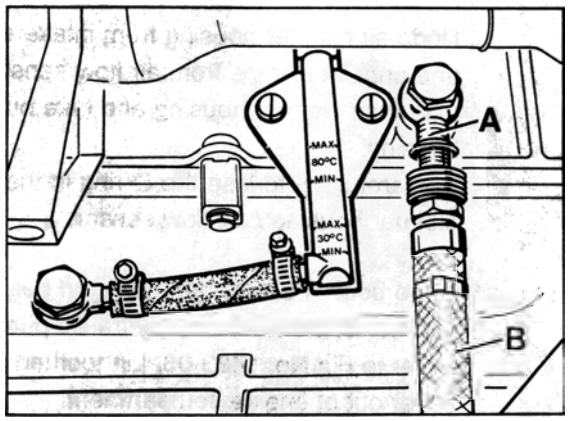

388-38

A = Quick-fill adapter
B = Hose of filler device

Start engine with selector lever set to "P" and allow engine to idle. Observe ATF level in oil level pipe and immediately top up to the 30°C Max mark if required.

Note

The ATF level in the transmission may vary according to the fluid temperature. The marks on the oil level pipe refer to ATF temperatures of 30°C and 80°C.

Run vehicle to warm up transmission and check ATF fluid at 80°C.

The fluid level must now between the 80° C mark and the Min and Max marks.

To determine the ATF temperature exactly, use System Tester 9288.

Toothed belt for power steering:

Checking condition

1. Remove transmission guard from transmission. Undo hot-air hose from heater flap box at air distributor pipe.
   Undo three M 6 x 15 mm hexagon head bolts from toothed belt cover.

The figure shows the engine removed from the vehicle

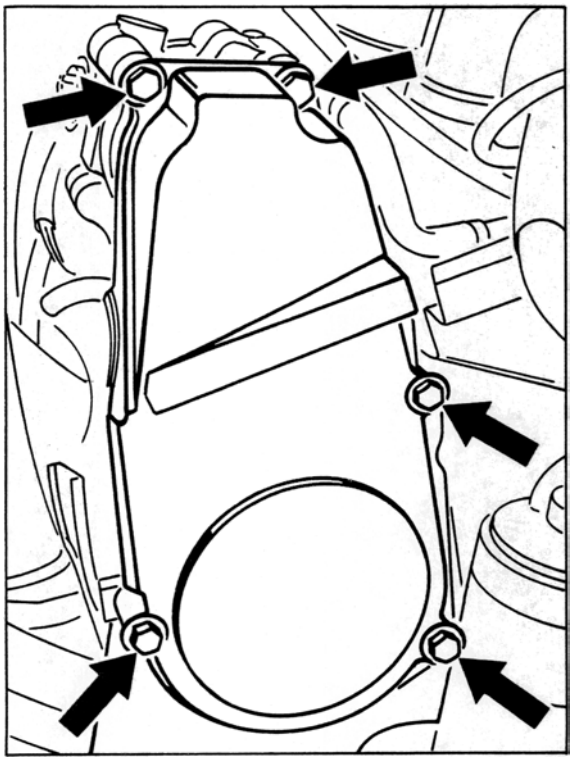

1423-03

2. Unhook clamps of air cleaner cover.
   Remove housing cover and filter element.
3. Undo air cleaner housing from intake air rail and unhook clamps from air flow sensor.
   Lift up air cleaner housing and take out housing.
   Be careful not to lose the O-ring in the air cleaner housing / air flow sensor.
4. Undo both M 8 x 30 mm hexagon head screws on the top of the hydraulic pump. Refer to Fig No. 1423-03. Lift toothed belt cover out of engine compartment.
5. Rotate engine and check toothed belt for wear and damage. The belt tension cannot be adjusted.

Replacing both engine oil filters

Replacing oil filter on engine housing

1. Remove engine guard. Undo hot-air hose at heating flap box and at air rail and take off hose.

2. Undo hexagon head bolt at crankcase and pull oil pipe out of crankcase. Catch remaining oil in a pan.

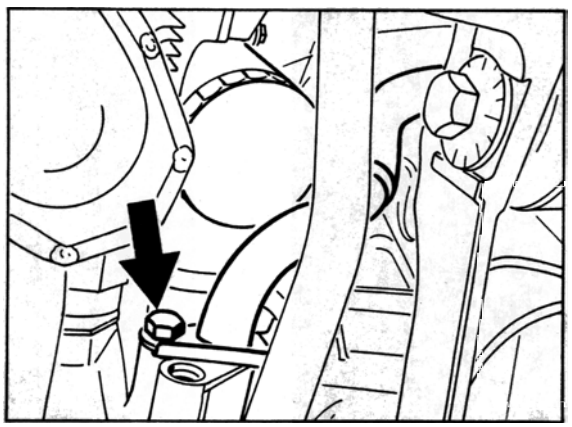

1439-03

3. Undo oil filter with Special Tool 9204.

4. Apply a thin coat of oil to new oil filter. Tighten oil filter manually until seal is seated firmly. To tighten fully, turn by approx. another 1/2 turn. Always replace O-rings for oil pipe.

Replacing oil filter on thermostat housing

1. Remove right-hand side member panel. Undo rear wheel housing liner in oil filter area.

2. Undo oil filter with Special Tool 9204.

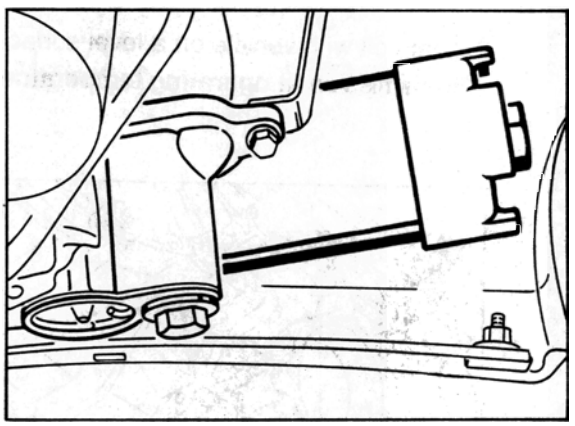

1440-03

3. Apply a thin coat of oil to seal of new oil filter. Tighten oil filter manually until seal is seated firmly. To tighten fully, turn by approx. another 1/2 turn.

Check oil level at operating temperature and idle speed (refer to Owner's Manuals). Check engine, oil reservoir, pipes and front oil cooler for leaks (visual inspection)!

Changing transmission oil (manual transmission)

Filling capacity: 3.6

Oil grade:

Transmission SAE 75 W 90 to API GL 5 or MIL-L 2105 B.

1. Remove transmission guard.

2. Drain oil with vehicle on a level surface and transmission at **operating temperature.**

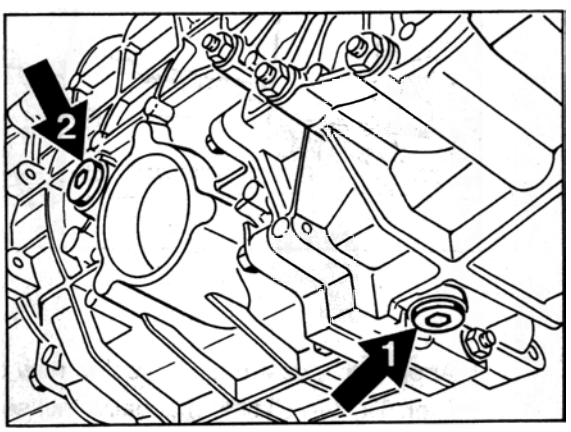

1437-03

1 - Drain plug with magnet
2 - Filler plug

3. Clean filler and drain plugs, replace seals and tighten bolts to 30 Nm (22 ftlb.).

4. **Slowly** fill in 3.6 liters of transmission oil with the vehicle on a level surface.

Note

Due to the length of the transmission, the oil requires some time to flow into the oil cavity in the front transmission cover.
If oil is filled in too quickly, the transmission may overflow even before the specified oil quantity has been reached.
It is therefore very important to top up very **slowly,** observing the specified **oil quantity**.

Changing transmission oil in real wheel drive (Tiptronic)

Filling quantity: approx. 0.9

Oil grade:

Transmission oil SAE 75 W 90 to API GL5 or MIL-L 2105 B, or optionally SAE 90.

1. Remove transmission guard.

2. Drain oil with vehicle on a level surface and transmission at operating temperature.

3. Clean filling and drain plugs, replace seals and tighten bolts to 50 Nm (37 ftlb.).

4. Fill in transmission oil with the vehicle on a level surface until the oil overflows at the neck.

Replacing fuel filter

1. Unhook clamps of air cleaner cover. Take out housing cover and filter element.

2. Separate air cleaner housing from intake air rail and unhook from air flow sensor. Lift up air cleaner housing and take out housing. Be careful no to lose the O-ring in the air cleaner housing / air flow sensor.

3. Undo fuel lines, using a second wrench to lock. Drain remaining fuel into a suitable container.

4. Undo clamp and remove fuel filter.

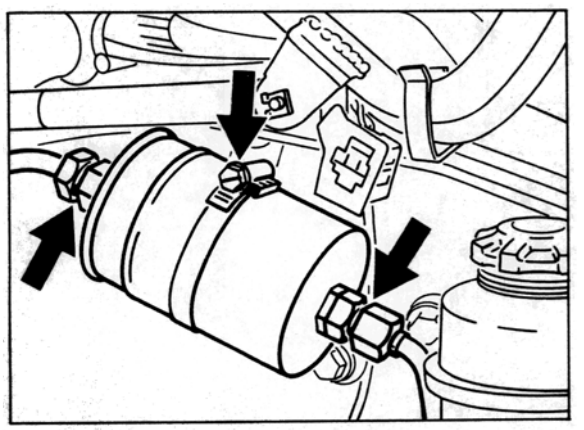

1420-03

5. Fit new filter. Observe direction of flow = direction of arrow.

6. Start engine and check fuel lines and fuel filter for leaks.

Check fuel and injection lines for leaks and tight fit!

Battery:

Checking electrolyte level

Note

To avoid short circuits, the battery must always be disconnected when working on the electrical system. However, the battery must never be disconnected when the engine is running.

1. Open luggage compartment lid.

2. Remove covers.

3. Undo and pull off ground connector.

Checking electrolyte level

1. Check electrolyte level of all cells.

2. If the electrolyte level has dropped below the minimum mark, top up with distilled water to the max. mark.

Note

Excessively low battery electrolyte level reduces the battery capacity and the life of the battery.

Changing brake fluid (vacuum brake booster)

Important notes

Use only new DOT 4 brake fluid. **Observe change interval and brake fluid quality. Refer to page 03 - 11 for further information.**
Total brake fluid quantity **approx. 1 liter.**

Procedure for changing brake fluid

Fill reservoir with new brake fluid up to upper edge. **Connect bleeder device to reservoir.**
Clamp shut overflow hose/venting hose with a hose clamp. The overflow hose/venting hose has been omitted as from October 1995; see Technical Information, Group 4, No. 16/95.
Switch on bleeder device. Bleeder pressure approx. 1.5 bar.

Proceed with brake fluid change on the individual calipers (no particular sequence required).
Open each bleeder valve until clear, bubble-free brake fluid escapes or until the respective change quantity per caliper is reached (approx. 250 c.c.). Make sure all brake calipers are bled on both bleeder valves.

To monitor the escaping brake fluid for cleanliness, freedom from air bubbles and to determine the brake fluid used, use a recipient bottle.

Also drain some brake fluid at the bleeder valve of the clutch slave cylinder (approx. 50 c.c.).

Switch off and disconnect bleeder device. Top up brake fluid if required.

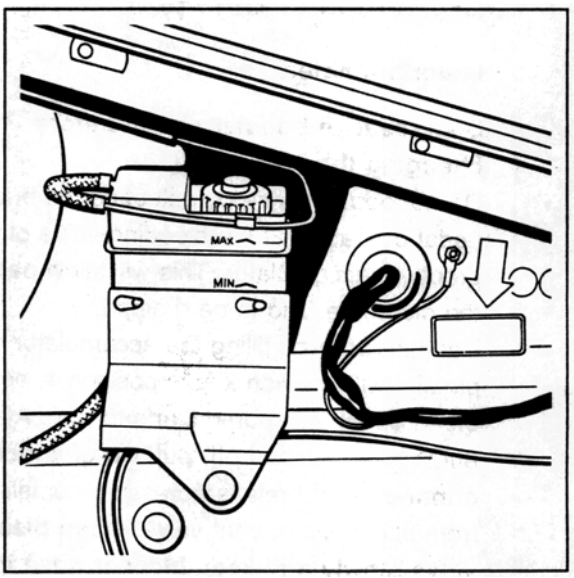

Changing the brake fluid (hydraulic brake booster)

Important notes

Use only new DOT 4 brake fluid. **Observe correct fluid change intervals and fluid grade. Refer to page 03 - 11 for further information**
Total brake fluid quantity for brake fluid change **approx. 1.6 liters.**

Brake fluid change procedure

Important notes

Depressurize booster circuit before changing the brake fluid.
Do not depressurize by actuating the brake pedal but rather at the bleeding valve of the pressure accumulator. This will allow part of the old brake fluid to be drained.
Caution: Start by filling the accumulator completely (with ignition key in position 1, actuate brake pedal until pump starts to run). After the pump has switched off, **pull off electrical connector** and release pressure completely from accumulator vent valve. **Open bleeder valve slowly and keep bleeder hose in place.**
Caution: A pressure of up to 180 bar is present in the system.
Wear goggles and protective gloves!

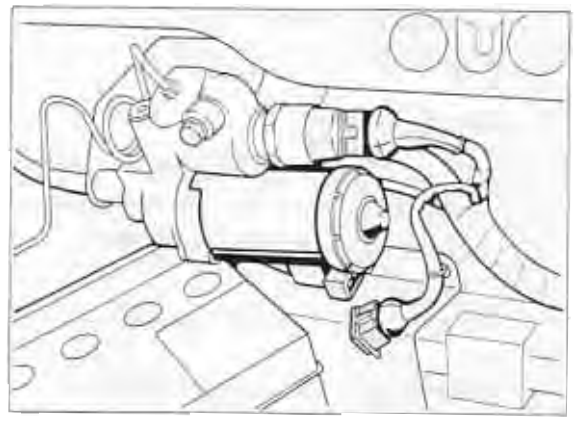

348-47

To allow the brake fluid to be changed in a rapid and practical manner, a filling and bleeding device should be used.

If the booster circuit has not been depressurized completely, do not actuate the brake pedal while the bleeder device is connected.

Changing the brake fluid: 1st step

With the booster circuit depressurized, top up with fresh brake fluid to upper edge of reservoir. **Connect bleeder device to reservoir.**
Clamp shut overflow hose/venting hose with a hose clamp. The overflow hose/venting hose has been omitted as from October 1995; see Technical Information, Group 4, No. 16/95
Switch on bleeder device. Bleeding pressure: approx. 1.5 bar.

Use a recipient bottle to allow the escaping brake fluid to be checked accurately for cleanliness and freedom from bubbles and to determine the quantity of brake fluid used.
Fluid change quantity per wheel:
approx. 250 cc.
Bleed at both bleeder valves on each wheel.
Caution: Pump the break pedal at least **10 times** over its full travel after operning the **first** bleeder valve. This additional operation is only necessary for vehicles with hydraulic brake boosters and then only for the first bleeder valve.

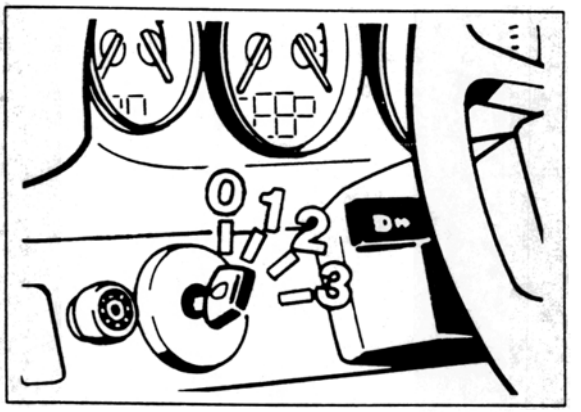

2004-47

Switch off and disconnect bleeder device. Remove hose clamp from overflow hose (vent).

Fill pressure accumulator completely by connecting the electrical connector.

After the pump unit has switched off, correct brake fluid level. **Never top up beyond the "Max. mark".**

Changing the brake fluid: 2nd step

With the bleeder device switched on, drain approx. 200 cc brake fluid at pressure accumulator. For this purpose, connect electrical connector to pressurizing pump with ignition key in position 1. As soon as the specified quantity has been drained, pull off connector and close bleeder valve.

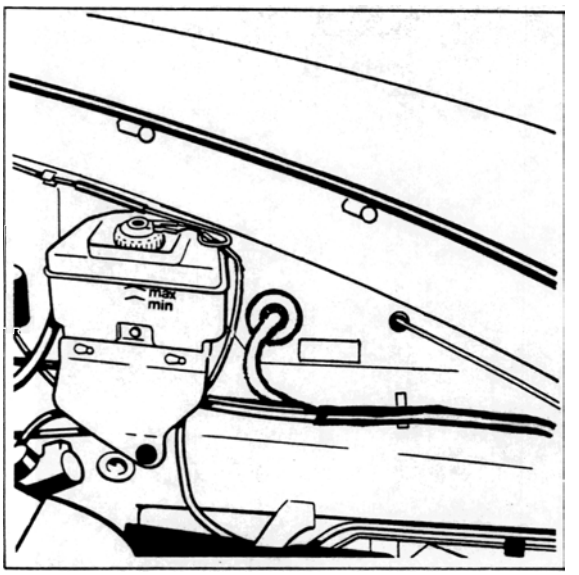

1 Tightening torques for the engine

Location	Thread	Tightening torque Nm (ftlb.)
Crankshaft/crankcase		
Connecting rod bolt (Identification: 14)	M 9 x 1.25	
First stage:		30 (22)
Final stage:		1 x 90° ± 2° rotating angle
Final check		60 (refer to page 13-10d)
Oil pump	M 8	23 (17)
Crankcase bolt connection (through bolts)	M 10 x 1.25	50 (37)
Hexagon head nuts or hexagon head bolts to crankcase	M 8	23 (17)
Double mass flywheel to crankshaft	M 10 x 1.25 x 70	85 (63)
Drive plate to crankshaft (Tiptronic)		90 (66)
V-belt pulley to crankshaft	M 14 x 1.5	170 (125)
Plug - pressure relief and safety valve	M 18 x 1.5	60 (44)
Oil drain plug for crankcase housing	M 20 x 1.5	50 (37) + 5 (4)
Oil drain plug for thermostat housing	M 20 x 1.5	50 (37) + 5 (4)
Screw-in neck in left-hand crankcase section (oil return to oil tank)	M 22 x 1.5	70 (52)
Screw-in flange in right-hand crankcase section (oil feed to oil pump)	M 24 x 1.5	90 (66)

Location	Thread	Tightening torque Nm (ftlb.)
Cylinder and cylinder head		
Cylinder head bolts		
First stage: Final stage:		20 (15) 1 x 90° ± 2° rotating angle
Camshaft housing/ cylinder heads	M 8	23 (17)
Knock sensor bridge to cylinder bank	M 6	9.7 (7)
Knock sensor to knock sensor bridge		20 ± 5 (15 ± 4)
Engine - NTC to cylinder head 3		10...12, max. 15 (7...9, max. 11)
Rocker arm shafts	M 6 x 35	13 (9)
Spark plugs	M 14 x 1.25	30 (22)
Timing gear		
Sprocket to camshaft	M 12 x 1.5	120 (88)
Chain sprocket to camshaft (4-hole chain sprocket)	1st step 2nd step	20 (15) 90° rotation
Gear / power steering pump to camshaft		120 (88)
Flange stud (slider and tensioning rail to crankcase)		30 (22)
Chain housing to crankcase		23 (17)
Chain housing cover		9.7 (7)
Valve cover to camshaft housing	M 6	9.7 (7)
Bearing saddle / chain housing		9.7 (7)

Location	Thread	Tightening torque Nm (ftlb.)
Fan		
Tensioning strap		8 (6)
Alternator pulley		50 ± 5 (37 ± 4)
Pulley section / idler	M 6	
Fan wheel for alternator cooling		14 ± (10 ± 0.7)
Exhaust system		
Heat exchanger/ cylinder head		28 (21)
Heat exchanger / catalytic converter or front muffler		23 (17)
Catalytic converter final muffler (ball clamp)		25...30(18...22)
Final muffler / tailpipe (ball clamp)		25...30(18...22)
Tensioning strap to catalytic converter or front muffler		20 (15)
Tensioning strap / final muffler		20 (15)
Oxygen sensor	M 18 x .5	50...60(37...44)
Plug to catalytic converter	M 8 x 1	15 (11)
Air injection lines		25 (18)
Belt monitor		
Bracket to crankcase	M 6	15...20(11...15)
Belt monitor to bracket	M 6	9.7 (7)

Location	Thread	Tightening torque Nm (ftlb.)
Fuel system		
Tank sender unit		30 – 3 (22 – 2)
Clutch **Double-mass flywheel (manufactured by Luk)**		
Double-mass flywheel to crankshaft	M 10 x 1.25 x 70	85 (63)
Pressure plate	M 8 x 40	23 (17)

10 01 19 Removing and installing the engine

Special Tools

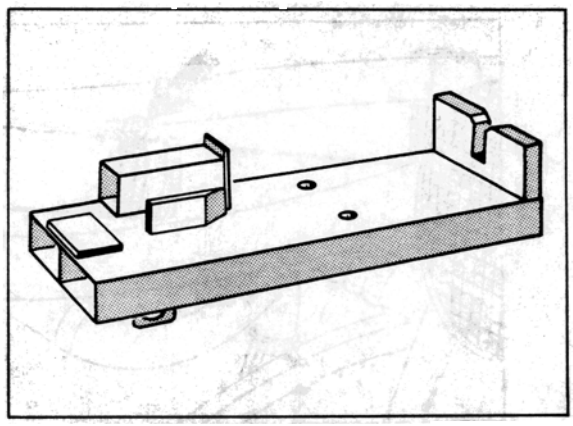

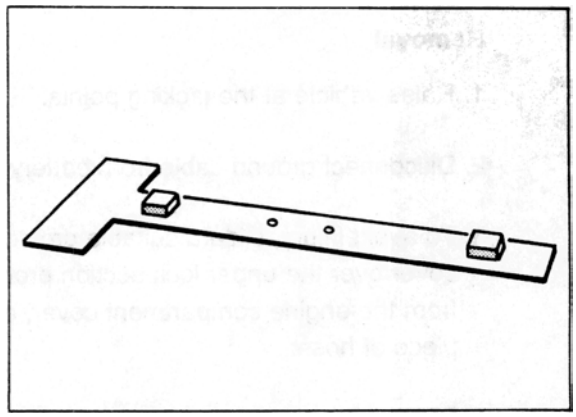

442-10

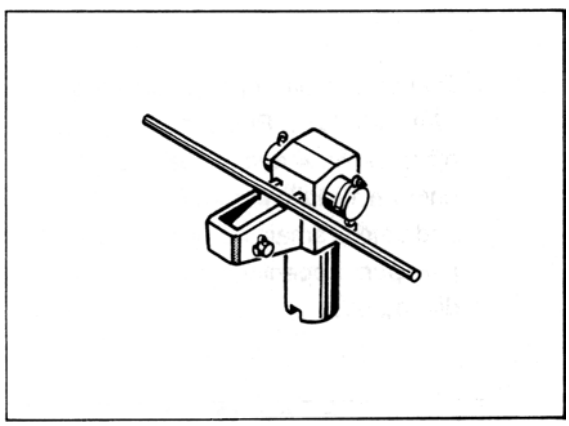

441-10

No.	Designation	Special tool	Order number	Explanation
1	Engine mounting plate	9111/3	000.721.911.13	
2	Adapter for engine mounting plate	9111/1	000.721.911.11	
3	Support plate	9111/2	000.721.911.12	

10 01 19 Removing and installing the engine

The engine/transmission assembly is removed as a unit from below.

Removal

1. Raise vehicle at the jacking points.

2. Disconnect ground cable from battery.

3. To avoid injury, slide a suitable protective cover over the upper lock section protruding from the engine compartment cover, e.g. a piece of hose.

4. Disconnect plugs, remove air conditioning compressor from console and leave it attached to the hoses connected to it. The compressor may be placed on a suitable rigid support on the left-hand side panel.

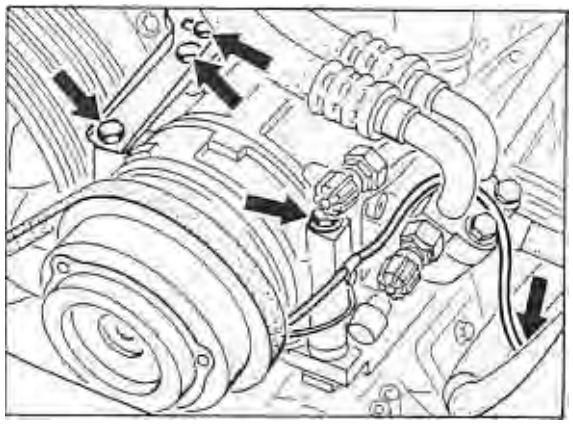

1477-15

5. Remove hot air blower.

6. Remove air cleaner assembly.

7. Disconnect crankcase / oil tank vent hoses.

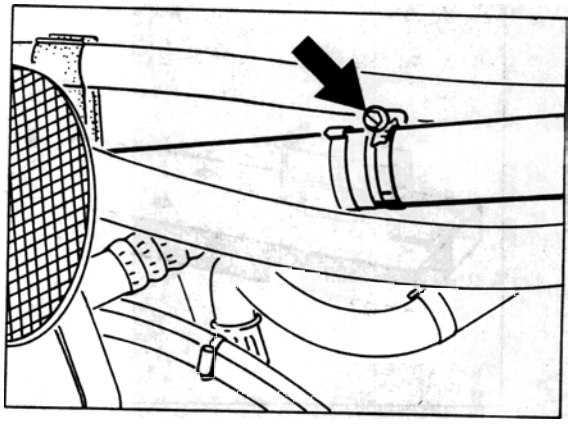

1594-10

8. Drain reservoir of power steering pump (draw off fluid). Pull spark plug connectors off cyls. No. 4 and 5. Place suitable pan under hydraulic pump. Disconnect hoses and catch remaining oil in a pan. Always plug pump openings and hoses (to prevent dirt ingress).

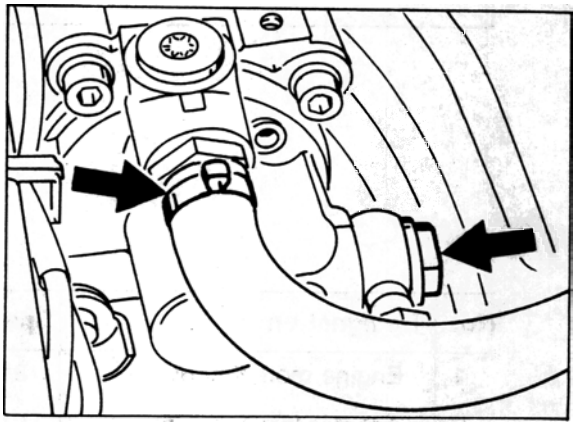

1593-10

9. Disconnect plug from intake rail. Take care not to lose the plug seal.

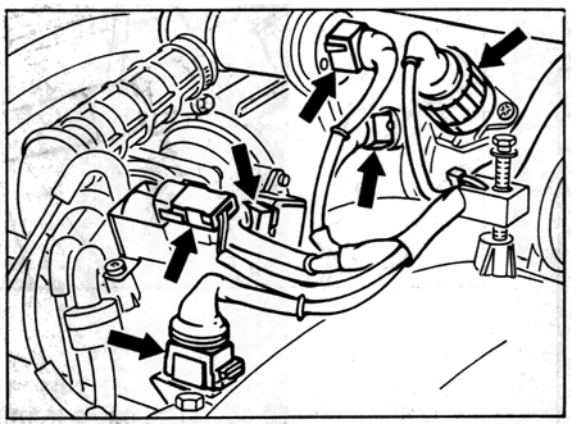

1475 - 15

10. Disconnect the following connectors or wires, respectively, in the left-hand front engine compartment area:

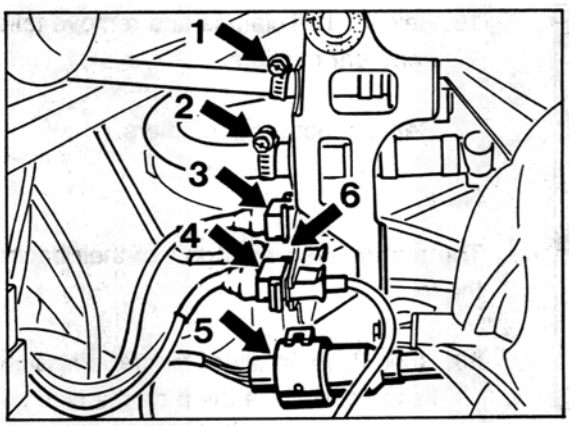

1458-10

1 - to carbon canister

2 - to brake booster

3 - to temperature sensor II (cyl. no. 3)

4 - to knock sensor

5 - cruise control connector

6 - to reference mark sender

11. Undo cover of electrical system of engine compartment. Disconnect connectors carefully (to avoid breakage).

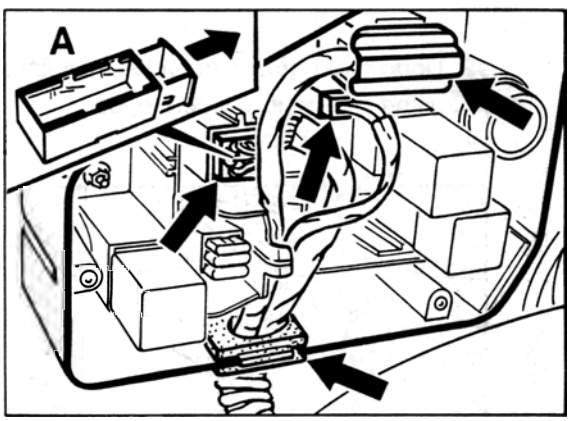

1476 - 15

Note

Release connector A before pulling it off.

11a. Remove right-hand cover next to air conditioning compressor, unlatch oxygen sensor plug and disconnect plug.

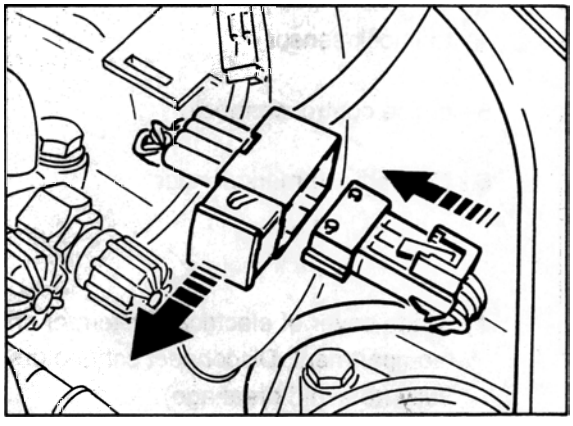

1630-15

12. Undo fuel return and fuel supply line, using a second wrench to lock.

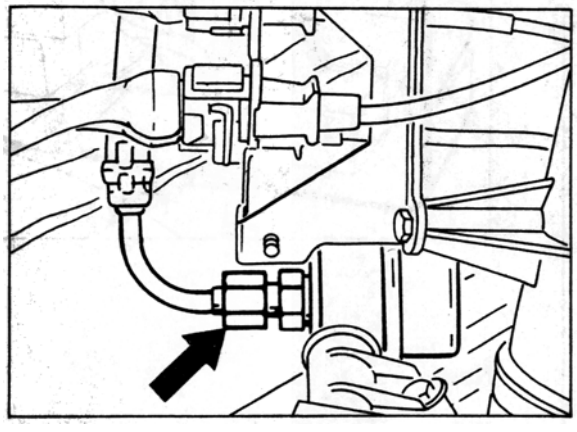

1595-10

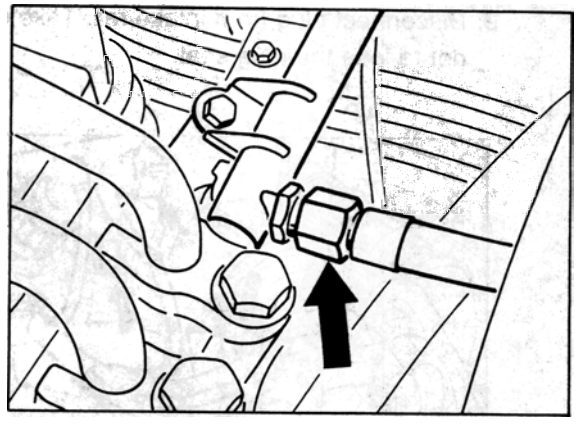

1596-10

13. Unlatch throttle operating cable from pedal return lever, back off lock nut and take off ball joint.

14. Raise vehicle

15. Remove engine / transmission guard and rear underbody paneling.

16. Release ball clamps and remove tailpipes from rear mufflers.

17. Remove both rear mufflers.

Note

The rear mufflers engage into their backets at the top.

18. Undo drive shafts at the transmission flange and place them on the side sections of the subframe. **Protect** the drive shafts against damage, e.g. with hose sections.

19. Undo hexagon head screw and pull selector rod coupling off the internal shift rod.

20. Remove hot air hoses, hot air pipes, hot air flaps and front transverse strut.

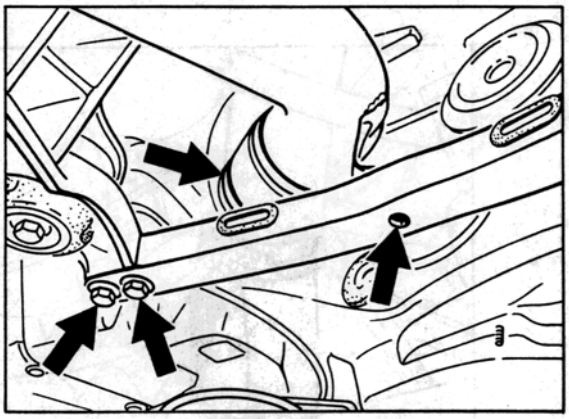

1616-10

21. Remove complete stabilizer assembly.

22. Mark position of toe eccentrics (A area).

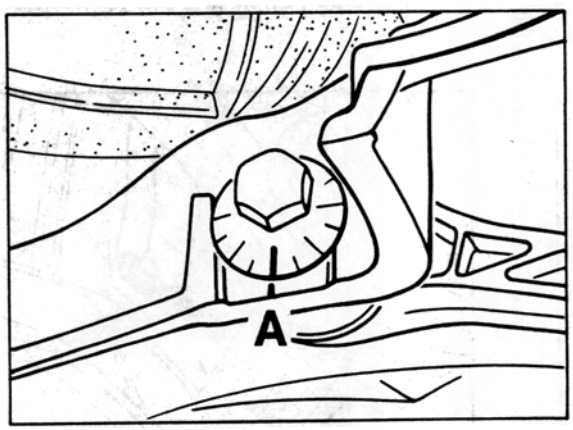

1481-10

22a. Loosen fastening nut no. 1 (without removing it). Remove toe eccentric (A area). Rotate toe control arm 2 towards the out-side (detaching it from the cross member).

Important:
While doing so, the rubber boot of the ball joint must be rotated as well (arrow); otherwise, the boot might get damaged.

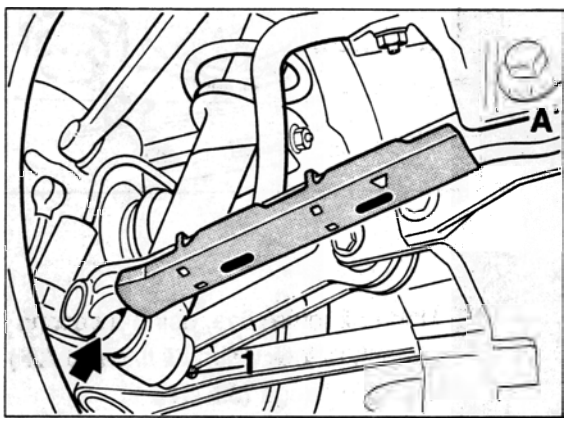

1635-10

22b. Detach toe control arm 2 on the other side as well and rotate it downwards.

22c. Remove rear cross member.

23. Disconnect oil return line from gearbox.

24. Release right-hand sill cover and engine oil from thermostat housing. When the engine is to be rebuilt, also drain oil from crankcase.

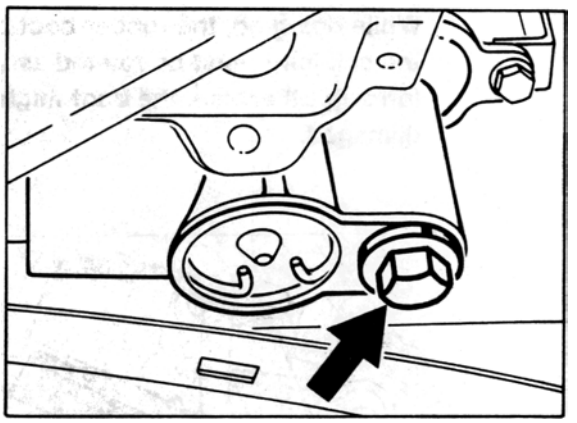

1454-03

25. Undo oil return line, using a second wrench to lock. Plug oil line (36 A/F) and screw-in flange (32 A/F).

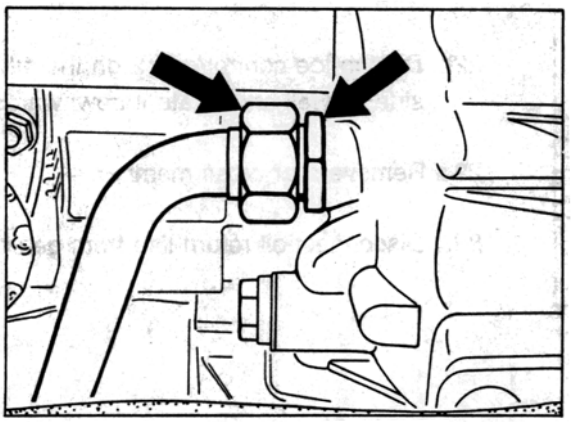

1598-10

26. Release hose clamp and pull hose off the oil pipe. Catch remaining oil in a pan.

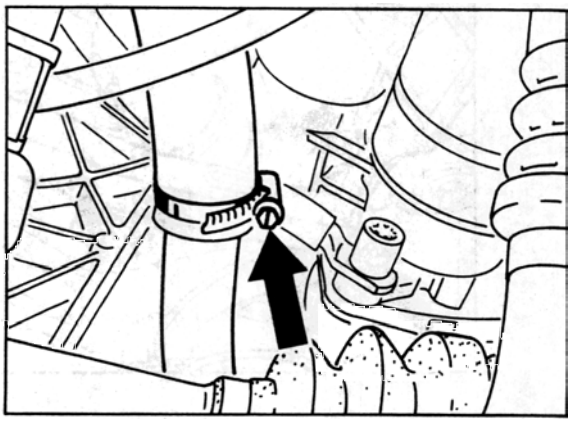

27. Undo wire of term. 30 from starter.

28. Undo ground strap between body (RH inner side panel) and starter from body.

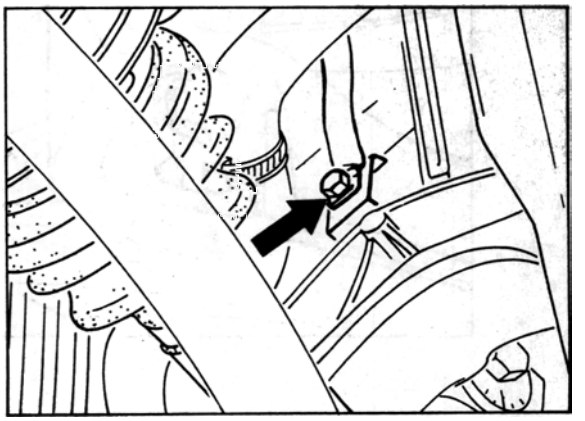

29. Pull throttle operating cable out of its guide.

30. Place engine jack complete with engine mounting plate, applying a slight preload.

Note

a. Observe position of mounting plate. Lock lever in horizontal position.

b. The support blocks on the mounting plate **face down.**

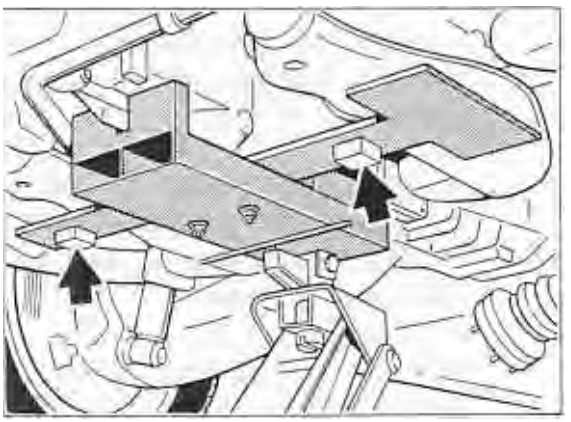

1381-10

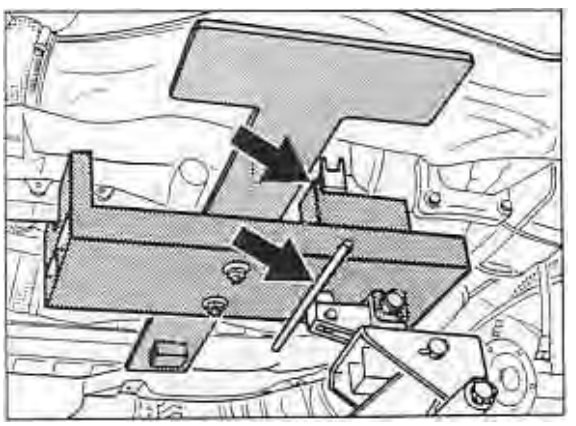

459-10

31. Unbolt transmission crossmember (6 bolts). Unbolt engine mount. (Use long-reach socket).

32. Carefully lower engine/transmission assembly somewhat. Working from the engine compartment, unbolt the clutch slave cylinder and suspend it to one side complete with the lines remaining connected.

Note

Do not actuate the clutch pedal after the slave cylinder has been removed. **Attach a note to this effect inside the vehicle.**

33. Lower engine/transmission assembly further, move or place right-hand drive shaft over starter. When lowering the assembly, take care not to damage the lower spark plug connector (cyl. no. 3) and the clutch housing vent line.

Caution

When the vehicle is placed back on its wheels, the rear crossmember and both steering arms 2 should by all means be refitted to provide sufficient rigidity.

Installation

Observe the following aspects during installation:

1. Replace all fastening nuts.

2. Install engine/transmission unit.

3. Fit toe control arms 2 to cross member.

Note
Before fitting toe control arms 2 to the cross member, check weight and **quality category** of the toe eccentrics.
Required quality 10.9 (initial version 8.8 / see parts catalogue). The quality category is indicated on the screw head.
Replace eccentric, if required (e.g. if thread not o.k. or if quality category 8.8).
In this case, transfer the position marks to the new eccentrics.

Important:
To tighten the eccentric (A area), proceed as follows.

4. Tighten the toe eccentric (A area) **in zero position.** Tightening torque: 100 Nm (74 ftlb.).
Zero position: Toe control arm 2 and rear cross member form a horizontal line. To obtain this **zero position**, lift wheel carrier using all-purpose jack.

Note
The toe eccentrics can also be tightened after the vehicle has been put on its wheels and has been rocked back and forth approx. 25 mm.

5. Check whether all plugs have been removed completely from the oil hoses and oil pipes and **especially from the bends of the hoses and pipes**.

6. Tighten the fastening screw of the gearshift rod coupling. Tightening torque 23 Nm (17 ftlb.).

7. Fit accelerator cable from below. Make sure the rubber sleeve fits properly.

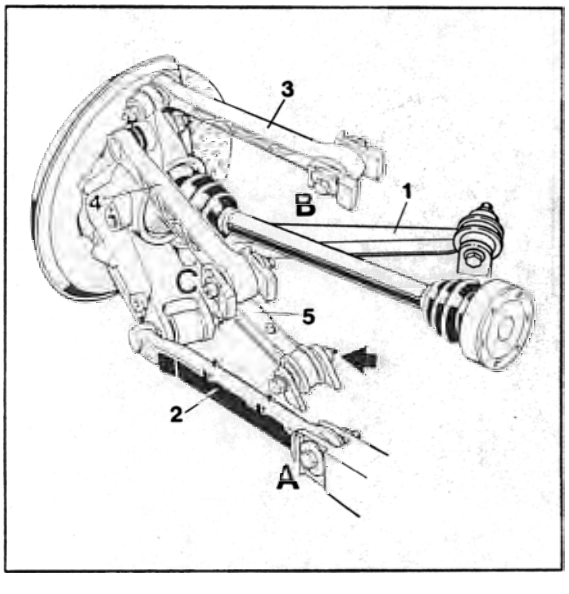

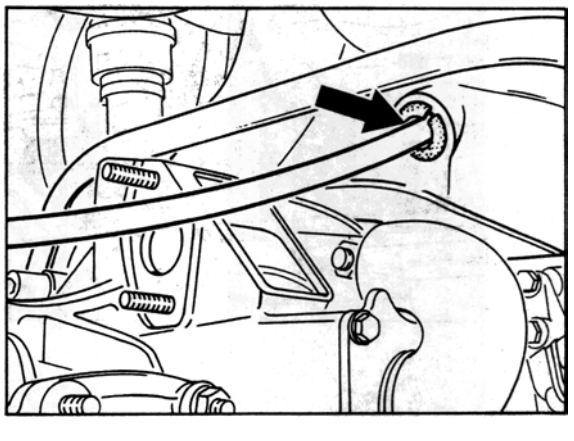

2118-10

Printed in Germany - 15. 1996

8. Put the engine compartment rubber seal between body and engine paneling in place correctly before installing the engine/ transmission unit in its final position.

9. Make sure the inner rubber seals of the connectors fit correctly.

10. Fit lid of assembly bores of engine suspension:

    Put the metal lid in place from below. The holding brackets on the lids must face upwards into the engine compartment. As shown in the figure, the holding brackets must be positioned at a right angle to the direction of travel in the "a" area. Only in this area is a tight fit ensured.

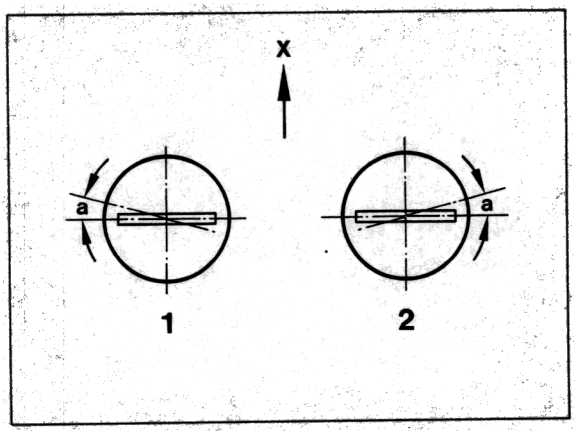

2149-10

1 = Lid left
2 = Lid right
a = 5 mm dimension - installation area

34 35 27 Removing and refitting the transmission

Removal:

1. Remove wire from starter and wire from reverse light switch.

2. Remove M 6 x 16 hexagon head bolt, bracket and mount cover. Pull out release shaft using a M 6 x 40 hexagon head bolt.

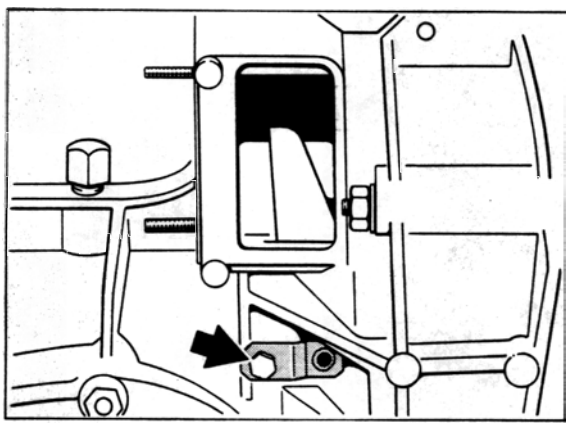

1391-10

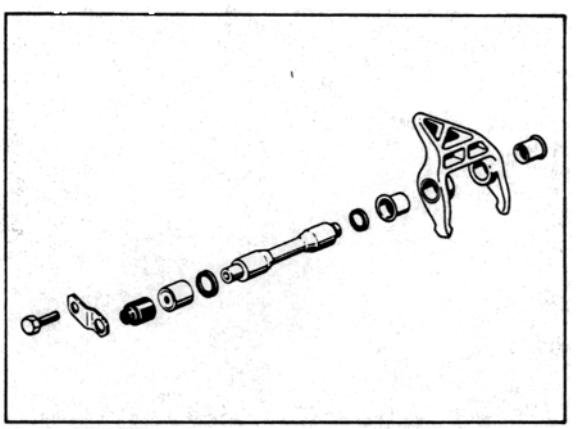

1388-10

3. Undo 4 fastening nuts and separate transmission from engine. Use Special Tool **P 119** to undo upper fastening nut on starter.

34 35 27 Removing and refitting the transmission

Refitting:

Note:

Apply a very thin coat of Olista Longtime 3 EP to input shaft splines (for corrosion protection only).

1. Engage release fork in release bearing and use a length of suitable adhesive tape to locate it provisionally in the installation position.

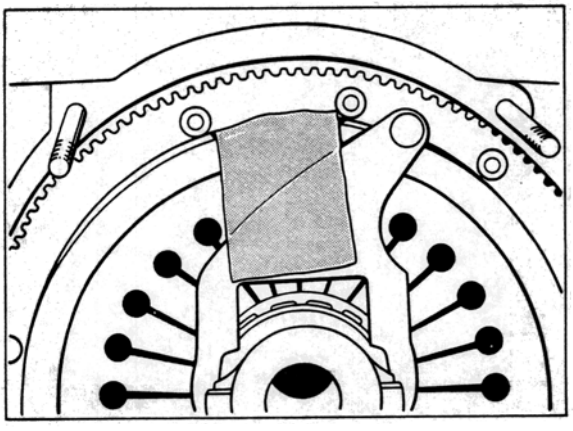

1390-10

2. Connect transmission to engine.

3. Engage release shaft with seals into release fork.

4. Remove locating tape from release fork across the assembly hole.

5. Fit needle-roller bearing, mount cover and bracket and tighten with M 6 x 16 hexagon head bolt (also refer to assembly notes, Group 30, page 30 - 1).

10 Tightening torques: Removing and installing the engine

Location	Thread	Tightening torque Nm (ftlb.)
Engine carrier to engine mount	M 12	85 (63)
Transmission carrier to body	M 12	46 (34)
Drive shaft to transmission flange	M 10	81 (60)
Oil drain plug to thermostat housing		50 + 5 (37 + 4)
Oil drain plug to crankcase		50 + 5 (37 + 4)
Selector rod (fit bolt)		18 (13) (lock additionally with Loctite 270)
Stabilizer bar to crossmember	M 8	23 (17)
Stabilizer mount to shock absorber	M 10	46 (34)
Link no. 2 to crossmember (ecc.)	M 12 x 1.5	85 (63)
Link no. 2 (track rod) to wheel carrier	M 12 x 1.5	85 (63)
Rear crossmember to side panels	M 12 x 1.5	120 (88)
Front crossmember to side panel	M 10	65 (48)

10 Special Tool 9111/3

Fit auxiliary support to Special Tool 9111/3 (engine mounting plate).

The auxiliary support should be fabricated in the workshop.

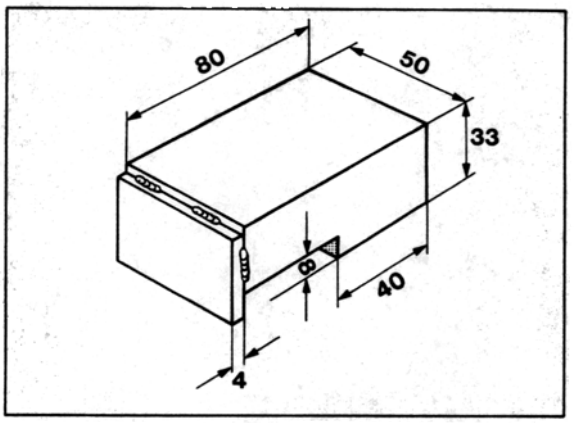

1775-10

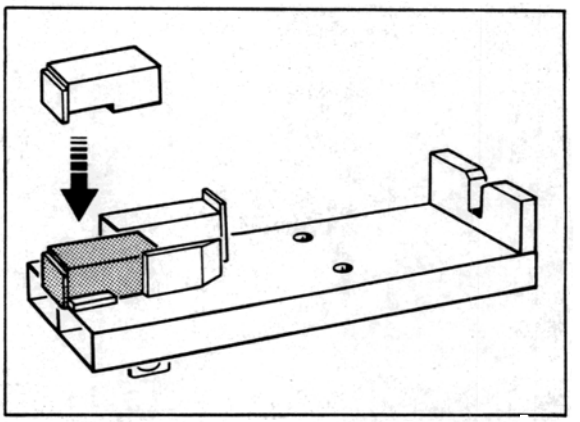

1776-10

10 01 37 Disassembling and Assembling Engine

Tools

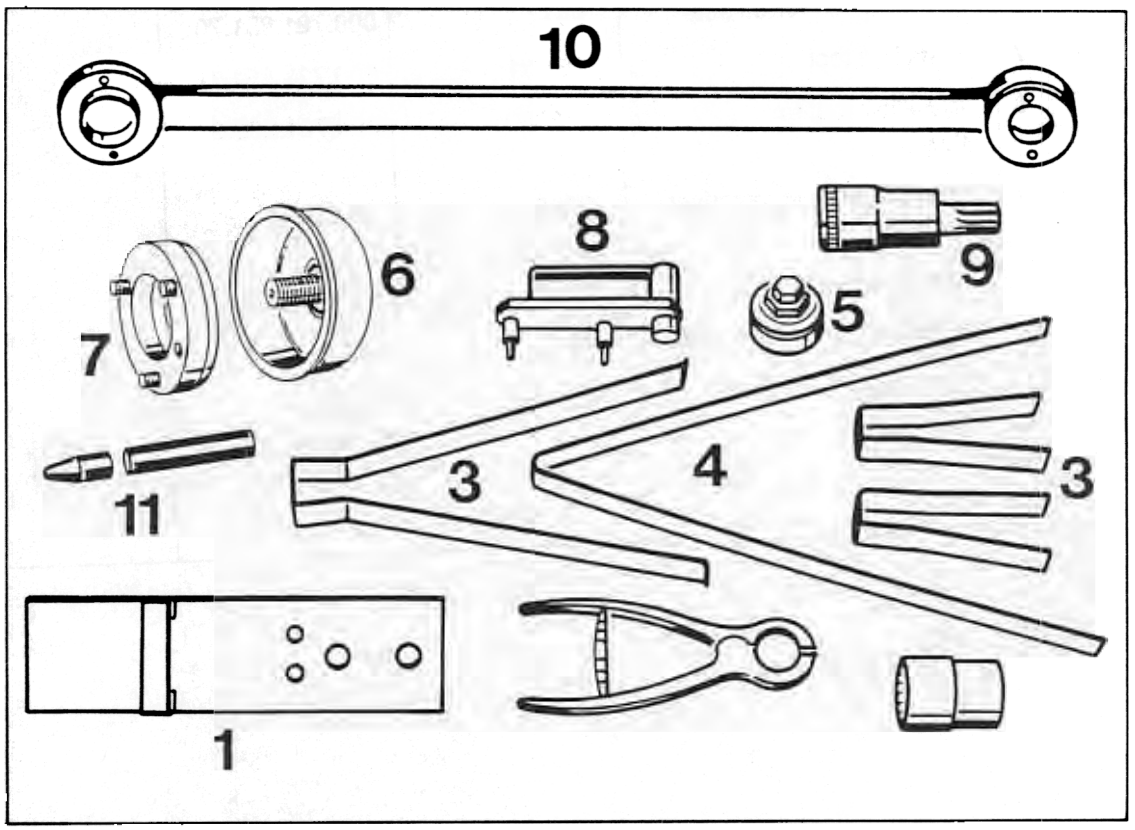

352/13

No.	Description	Special Tool	Order Number	Remarks
1	Holding plate	209 a	000.721.209.10	Bolt crankshaft on holding plate with multiple-tooth socket bolts, Part No. 928 102 152 01.
2	Circlip pliers			Standard
3	Straps (conrod)	P 221	000.721.221.00	Modify as required (conrod dimensions modified)
4	Strap (timing chain)	P 222	000.721.220.00	

No.	Description	Special Tool	Order Number	Remarks
5	Oil seal fitting tool (pulley side)	P 216 d	000.721.216.40	
6	Thrust piece for oil seal	9517	000.721.951.70	
7	Installing tool	9517/1	000.721.951.71	
8	Installing tool for flywheel	P 238 b	000.721.238.20	
9	Multiple-tooth screwdriver socket	9290	standard	
10	Holder for pulley	9548	000.721.954.80	
11	Installing sleeves for studs	9511	000.721.951.10	
12	M 14 wrench socket for studs		Snap-on Order No. FM 14 (2 required)	

10 01 37 Dismantling and assembling crankcase sections

Left-hand crankcase section

Note: Unless indicated otherwise, apply Loctite 270 to all stud threads when reassembling the engine!

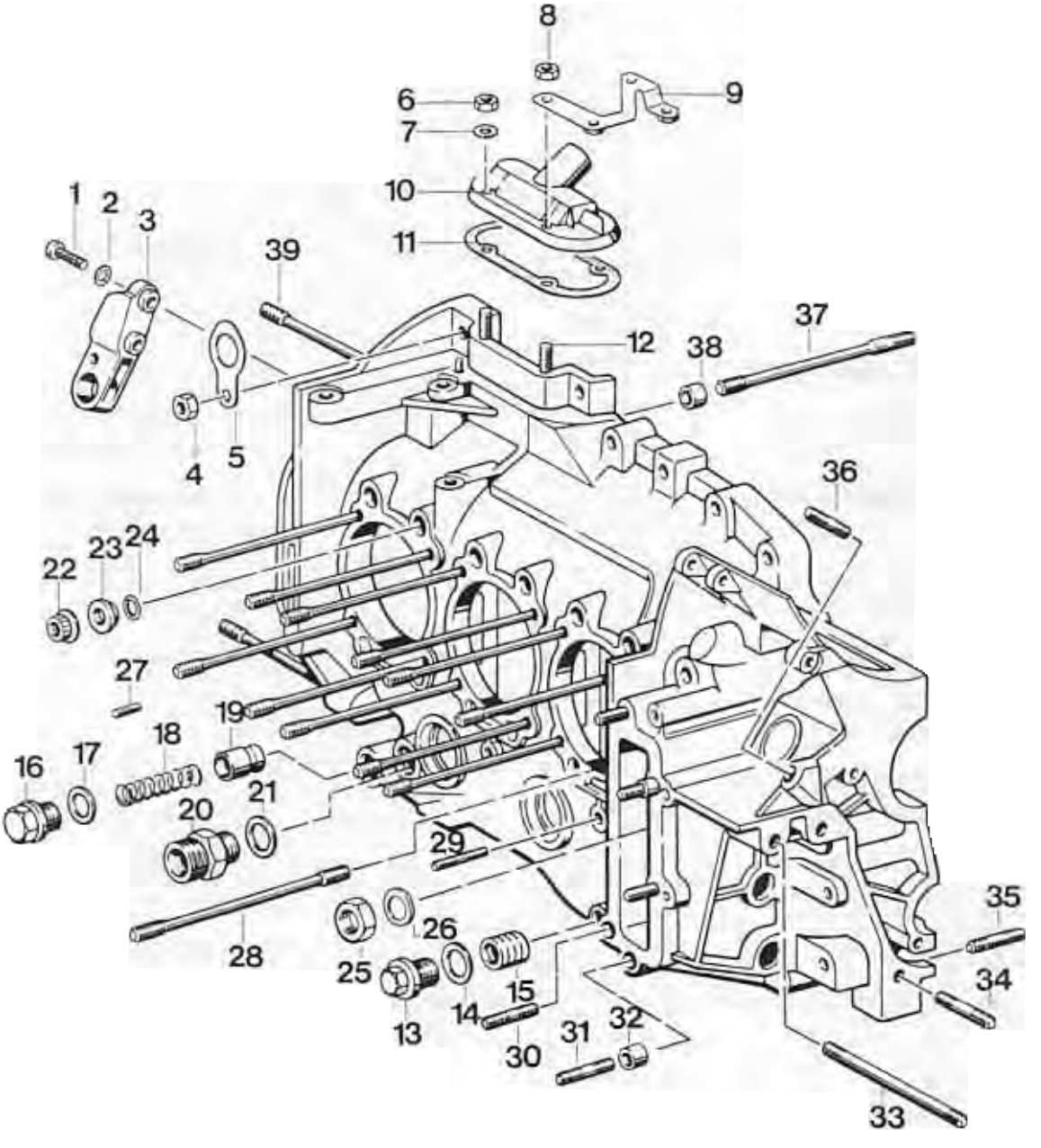

No.	Designation	Qty.	Note: Removal	Installation
1	Hexagon head bolt M 6 x 30	1		
2	Washer	1		
3	Sensor bracket	1		
4	Self-locking hexagon head nut	1		
5	Retainer	1		
6	Self-locking hexagon head nut	2		tightening torque 10 Nm (7 ftlb)
7	Washer	2		
8	Self-locking hexagon head nut	2		tightening torque 10 Nm (7 ftlb)
9	Retainer	1		
10	Ventilation cover	1		
11	Gasket	1		replace, coat both sides with Loctite 574
12	Stud M 6 x 20			projection length 20 + 1 mm
13	Drain plug M 20 x 1.5	1		tightening torque 70 Nm (52 ftlb)
14	Seal A 22 x 27	1		replace
15	Threaded insert M 20 x 1.5	1		
16	Plug for oil pressure release valve	1		tightening torque 60 Nm (44 ftlb)
17	Seal A 18 x 24	1		replace
18	Thrust spring	1		
19	Piston	1		oil before fitting
20	Screw-in flange (oil return)	1	heat screw-in flange area	bond in place with Loctite 270, tightening torque 70 Nm (52 ftlb)
21	Seal A 22 x 27	1		replace

Printed in Germany – III. 1993

No.	Designation	Qty.	Note: Removal	Installation
22	Multiple-tooth nut	11		tightening torque 50 Nm (37 ftlb), tighten with double hexagon head socket insert
23	Stepped disc	11		
24	O-ring 8 x 2	1		replace, oil lightly
25	Hexagon head nut M 10 x 1.25 (at main bearing saddle VII)	1		tightening torque 50 Nm (37 ftlb)
26	Washer A 10.5	1		
27	Spray jet for piston cooling	6	heat spray jet area	bonded in place with Loctite 639, peened at circumference to lock
28	Stud M 10 x 164	12	heat area	projection length 130.2 - 0.5, use Loctite 649 to secure
29	Stud M 6 x 43	3		projection length 31 - 0.5 mm
30	Stud M 8 x 42	3		projection length 25 - 0.5 mm
31	Stud M 8 x 47	2		projection length 25 - 0.5 mm
32	Adapter sleeve	2		projection length 6 - 0.5 mm
33	Stud M 10 x 111	1		projection length 90 - 1 mm
34	Stud M 10 x 55	1		projection length 36 - 1 mm
35	**discontinued**			
36	Stud for distributor M 8 x 44	1		projection length 28 - 0.5 mm

Printed in Germany – III, 1993

No.	Designation	Qty	Note: Removal	Note: Installation
37	Stud M 10 x 1.25 / M 11 x 169	2		bond in place with Loctite 649, projection length 116 + 0.5 mm
38	Adapter sleeve	2		projection length 9.5 ± 0.3 mm
39	Stud	2		projection length 105 mm

Replacing oil spray jets for piston cooling

1. Using a 5 mm dia. drill bit, drill a pilot hole to approx. 2 mm depth. Remove cover, spring and ball.

2. Insert a M 5 tap (finishing tap No. 3) and pull out jet remains. If required, use M 6 tap (taper tap No. 1).

Note

Heat surrounding area of spray jet to facilitate removal.

4. Bond new spray jet in place using Loctite 640 or Loctite 270. Observe installation position, ball points towards bearing saddle. Bore must be free from Loctite.

5. Peen circumference of spray jet.

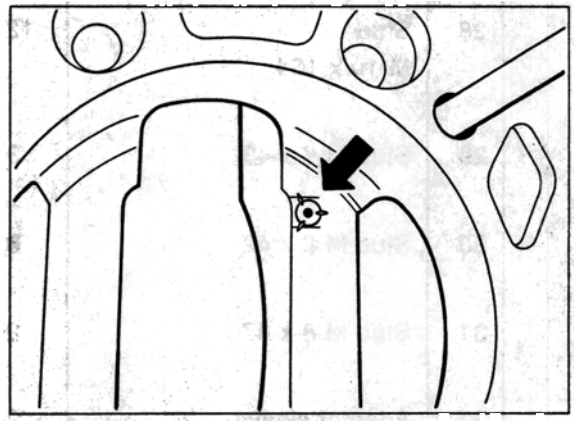

Note

Oversize spray jets are available from the Parts Department. Part No. 964.101.020.50

Right-hand crankcase section

Note: Unless indicated otherwise, apply Loctite 270 to all stud threads when assembling the engine!

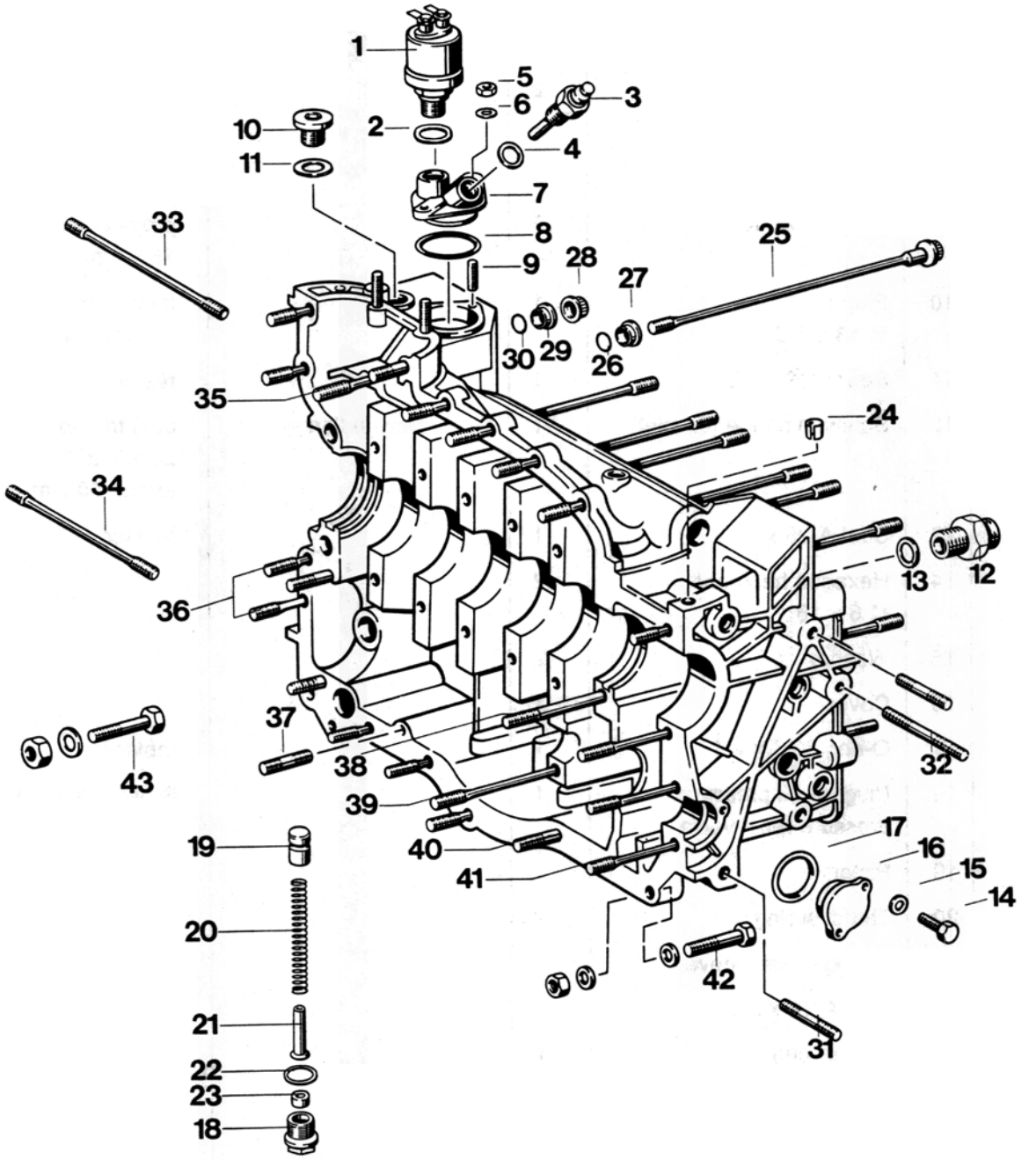

Printed in Germany – III, 1993

No.	Designation	Qty.	Note: Removal	Installation
1	Oil pressure sender	1		
2	Seal 18 x 24	1		replace
3	Temperature gauge sender	1		
4	Seal 14 x 18	1		replace
5	Self-locking hexagon nut	2		
6	Washer	2		
7	Cover	1		
8	O-ring	1		replace
9	Stud M 6 x 16	2		projection length 15.5 mm
10	Plug M 18 x 1.5	1		tightening torque 45 Nm (33 ftlb)
11	Seal A 18 x 22	1		replace
12	Screw-in flange (oil inlet)	1	heat screw-in flange	coat threads lightly with Loctite 270, tightening torque 90 Nm (66 ftlb)
13	Seal A 25 x 30	1		replace
14	Hexagon head bolt M 6 x 16	2		
15	Washer	2		
16	Cover	1		
17	O-ring 33.3 x 2.4	1		replace
18	Plug for oil pressure pressure relief valve	1		tightening torque 60 Nm (44 ftlb)
19	Piston			oil when fitting
20	Thrust spring	1		
21	Spring guide sleeve	1		
22	Seal A 18 x 24			replace
23	Spacer ring	1		
24	Tension sleeve 8 x 16 (blower mounting)	1		opening must point towards pulley

No.	Designation	Qty.	Note: Removal	Note: Installation
25	Through bolt	11		oil lightly, always use a second wrench to lock. To install, use a double hex head socket insert (14 A/F)
26	O-ring 8 x 2	11		replace, oil lightly
27	Stepped disc	11		
28	Multiple-tooth mut	2		use a double hex head socket insert (14 A/F)
29	Stepped disc	2		
30	O-ring 8 x 2	2		replace
31	Stud M 10 x 35	2		projection length 36 - 1 mm
32	Stud M 10 x 90	1		projection length 90 - 1 mm
33	Stud M 10 x 140	1		projection length 140 mm
34	Stud M 10 x 105	1		projection length 105 mm
35	Stud M 8 x 52	1		projection length 52 mm
36	Stud M 8 x 48	2		projection length
37	Stud (for mounting of oil pump) M 8 x 22	3		projection length 22 mm
38	Stud M 10 x	1		projection length 55 mm
39	Stud	1		projection length 108 mm
40	Stud M 8 x 32 (for circum-ferential mounting)	13		projection length 32 mm
41	Stud M 8 x 78	3		projection length 78 mm
42	Hexagon head bolt M 8 x 45	1		
43	Hexagon head bolt M 8 x 55	1		

Printed in Germany – III, 1993

Assembly notes

Sealing the crankcase mating sections

Use only **Loctite 574** to seal.

Loctite 574 hardens only when contact with metal is made and air ingress is prevented. After having applied the sealant, bolt up the crankcase sections within approx. 10 minutes since the sealant bead applied directly to the metal surface will otherwise start to cure.

Removing old sealant

In case of repairs, the old sealant coat must not necessarily be removed. It is sufficient to de-grease the surface and apply the new coat of sealant after the solvent has evaporated.

New Loctite will soften the old sealant embedded in the machining marks and will cure after assembly.

Should it be required to remove the old sealant, it isrecommended to use a fine-mesh wire brush or Loctite adhesive remover 80646.

Applying sealant

1. For manual application, it is recommended to use a short-pile paint roller and to pour the sealant into a dish with grooves at its circumference (for squeezing excess sealant off the roller).

2. Apply a uniform coat of Loctite 574 sealant to the left-hand crankcase section using the paint roller. Use a small paint brush to apply sealant to the areas around the bolt holes.

Crankcase Mounting Bolts/Studs and Nuts

Mounting Sequence of Bolts

1. Lubricate 11 bolts and 24 round seals lightly with oil.

Note

Lubricate seals with oil only immediately before installation; never keep lubricated seals in storage for a long time.

2. Place insulators on bols.

3. Guide round seals over the threaded zone with the tapered adapter of Special Tool P 9511, and slide on to the reduced shaft head end of the bolts.

Important

O-ring must not be pushed on to the bolt collar (10 mm dia.)!

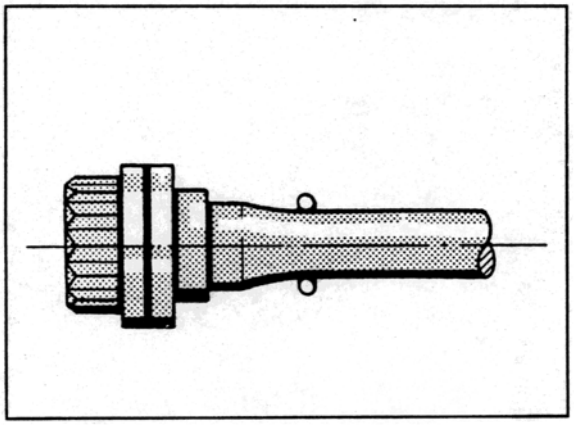

336/13

Prepare left and right crankcase sections for assembling. Coat mating surfaces and bearing seats of the left section lightly with Loctite No. 574.

Assemble the sections and tighten the outer crankcase M 8 nuts until there is contact between both mating surfaces.

4. Insert the prepared bolts into the right crankcase section from underneath against the metal stop.

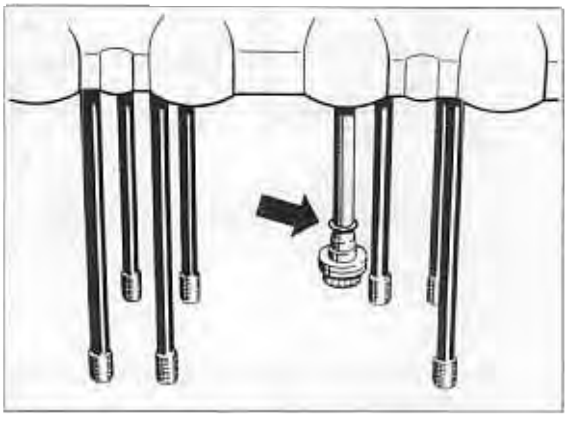

330/13

5. Slide the tapared adapter with mounted and lubricated round seal on the threaded end.

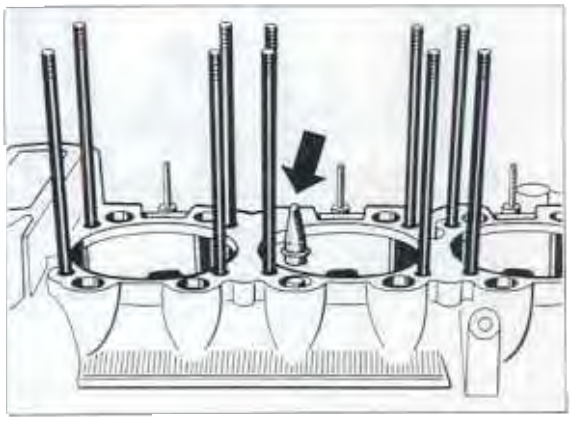

331/13

Printed in Germany – III, 1994

6. Slide round seal off of the tapered adapter carefully, with A-end (thin wall) of the cylindrical sleeve.

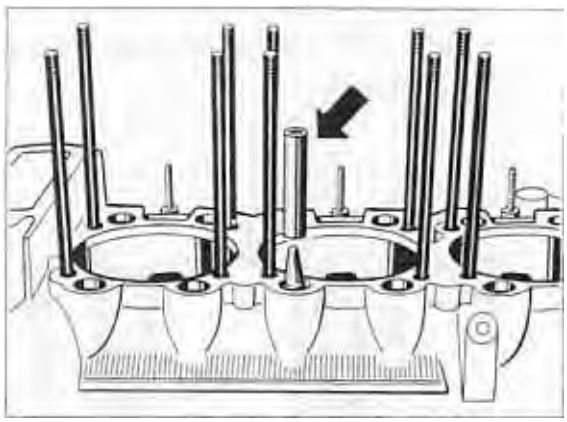

332/13

7. Remove tapered adapter and slide round sleeve into final position carefully with the B-end (thick wall) of the cylindrical sleeve, while counterholding on the bolt head.

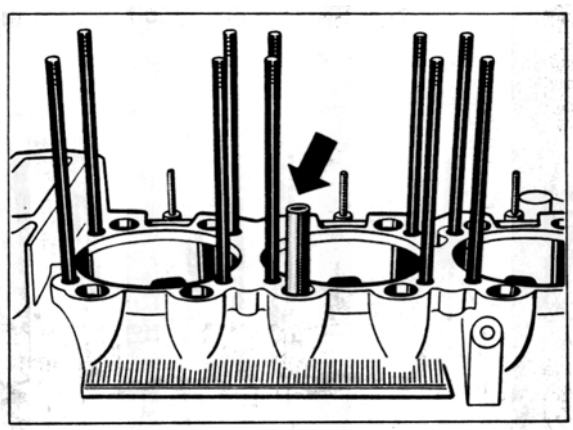

333/13

Special Tool 9511

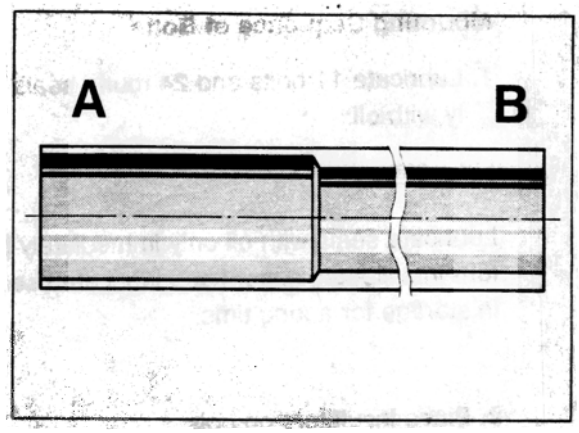

335/13

8. Install insulators dry and press on lightly with the cylindrical sleeve's B-end.

9. Install multiple-tooth nuts (threads lubricated with oil) finger tight.

10. Proceed with both studs for the right crankcase section (near bearing no. 1) accordingly.

Printed in Germany – III, 1994

11. Mount M 10 x 1,25 hexagon nut and A 10,5 spring washer on the stud, with rounded side facing the hex.nut.

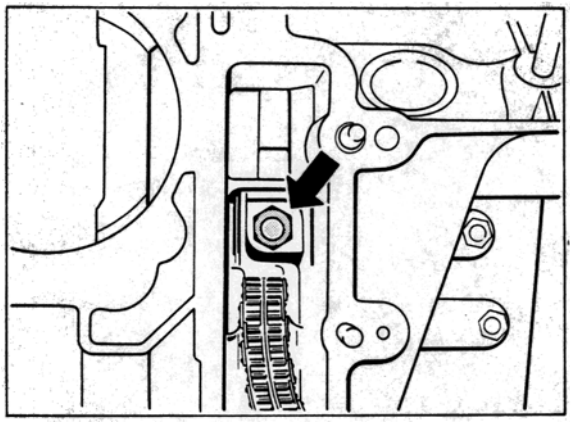

334/13

12. Tighten bolts and studs with 50 Nm (36.9 ftlb) Note specified tightening sequence.

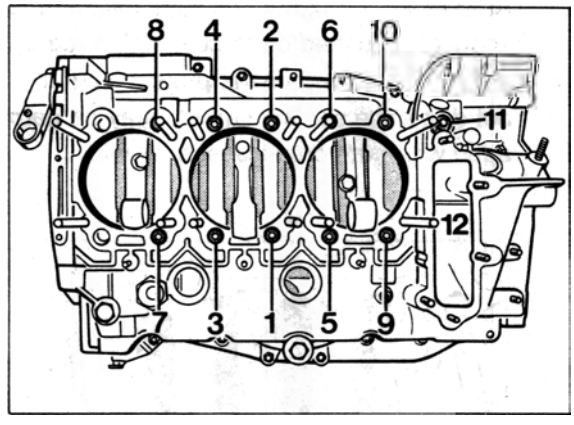

302-13

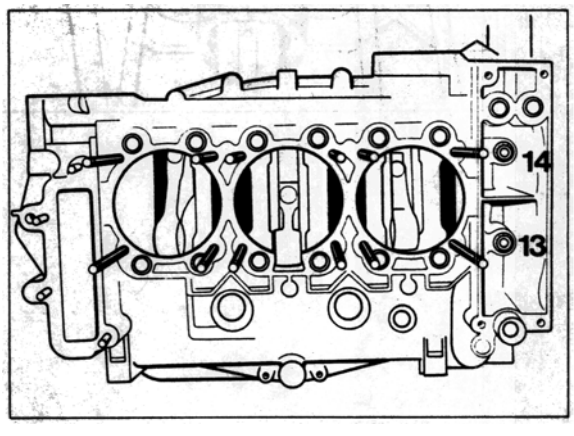

298/13

Note

A second person should always counterhold while tightening, to avoid damaging the O-rings while turning the bolts. Use a M 14 wrench socket from „Snap-on".

Printed in Germany – III, 1994

13. Tighten outer crankcase bolts with a final torque of 25 Nm (18 ft. lbs.).

Note

After fitting the right crankcase half, a tube should be pushed on to connecting rod cylinders 1 and 4 as damage protection. If this is not done, the sealing surface may be damaged when the crankcase is turned.

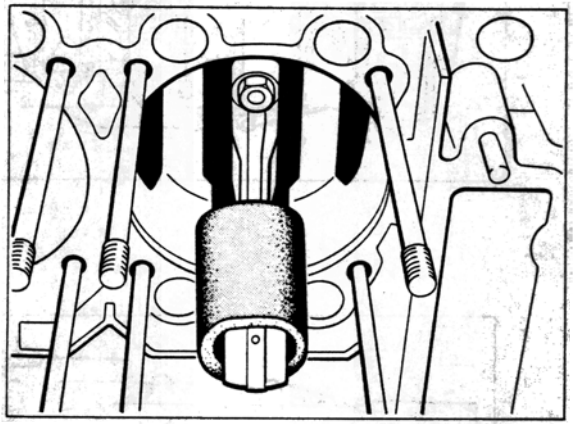

438-13

Assembly instructions

Right half of crankcase

Installation of lower anchorage bolts on RS engine (M 64/20)

Note

Additional O-rings (6 x 2.5) are inserted on 4 anchorage bolts of the lower bearing block mounts (bearing blocks 2, 3, 4 and 5) (part no. 999 707 288 40).

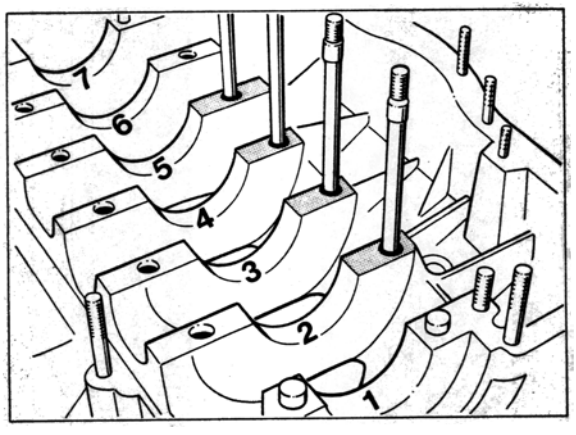

2202-10

Installation

Insert the pre-assembled anchorage bolts into the right half of the crankcase from below. Place conical sleeve on thread end using special tool P 9511. Push O-ring (dry) into bearing block up to bevel. Remove conical sleeve.

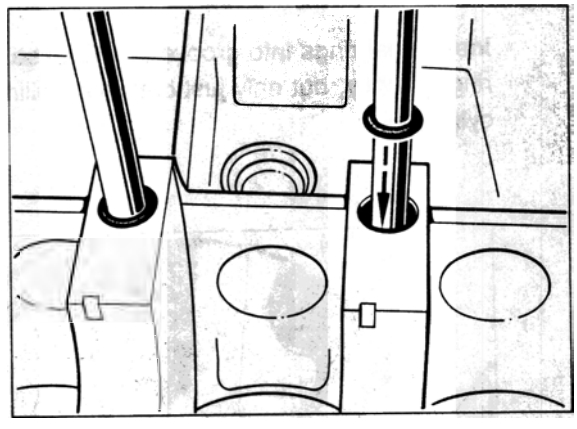

2201-10

Assembly instructions

Installation of cylinder base seals on RS engine (M 64 / 20)

Note

Sealing is no longer provided by O-rings on the cylinder but by seal rings in the crankcase.

Installation

Insert seal rings into groove dry. Grease seal rings slightly, but only just before installing cylinders.

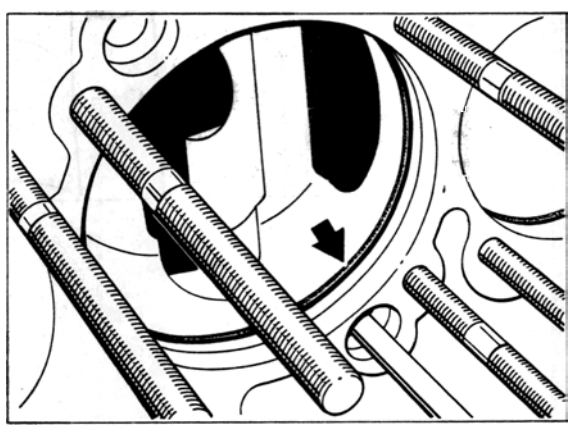

2200-10

10 10 Measuring and repairing the crankcase

Tools

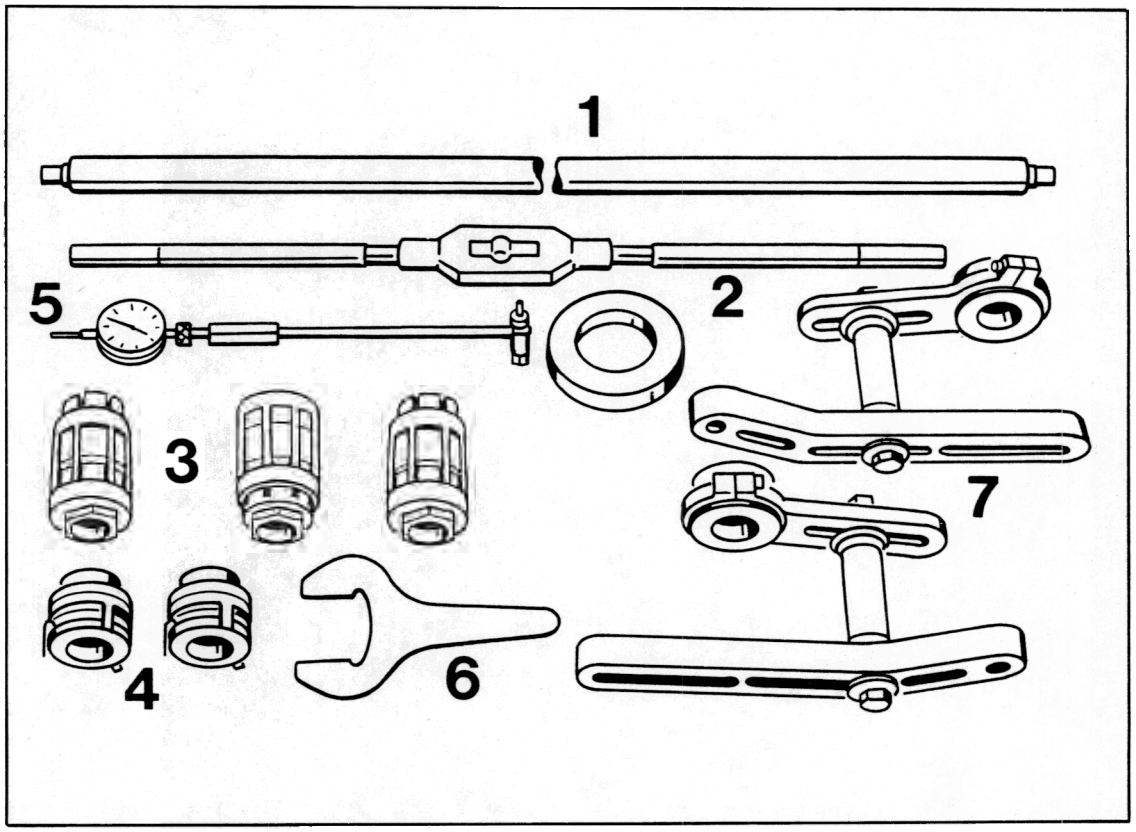

930-13

No.	Description	Special Tools	Remarks
1	Guide rod for reamer 35 x 1500 mm		comm. avail. (supplied by Hunger)
2	Tap wrench size 4		comm. avail. (supplied by Hunger)
3	Main bearing reamers		comm. avail. (supplied by Hunger)
4	End bearing bushings EL 35		comm. avail. (supplied by Hunger)
5	Internal measuring device with measuring ring dia. 65.000 mm		commercially available
6	Wrench, 58 A/F		comm. avail. (supplied by Hunger)
7	Guide for support of guide rod		comm. avail. (supplied by Hunger)

Printed in Germany – III, 1994

10 10 03 Measuring the crankcase

General

Whenever the crankcase is dismantled in the course of rebuilding the engine, measure the main bearing bores.

Measuring

1. Attach crankcase to engine support P 201 using mounting hardware P 201 b and assemble both housing sections.
   Lightly tighten all through bolts and four M 8 fastening nuts at bearing 1 (flywheel side) and at bearing 8 (pulley side).

2. Applying light blows with a plastic mallet, align both crankcase sections. The gap at bearing bore 8 must not show any offset whatsoever.
   Use an internal measuring device to measure bearing bore 8 diagonally and align to max. 0.02 mm.

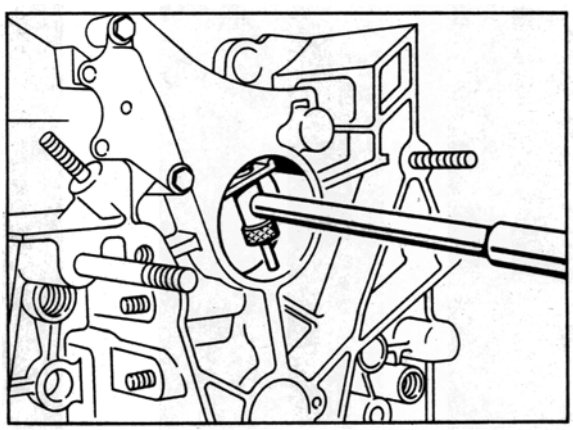

931-13

3. Tighten all through bolts and 4 additional hexagon nuts (M 8) at bearing 1 and bearing 8 to specified torque.

4. Measure all 8 main bearing bores using an internal measuring device.

   If the bearing bores are too narrow, use a standard reamer to ream bores to standard dia. 65.00.

   Specified size for bearing bores 1 to 8 is 65.000 mm to 65.019 mm.

5. If the bearing bores are too large, use a roughing or finishing reamer, respectively, to ream to 65.25 mm oversize dia. (B bearings).
   The checking dimension for B bearings is 65.25 mm dia. to 65.269 mm dia.

10 10 49 Reworking and reaming

General

Reaming of the light-alloy Silumin crankcase for B bearings is done in two steps. When reaming the bearings, always grease the reamer using white spirits.

1st step = roughing reamer 65.20 mm dia.
2nd step = finishing reamer 65.25 mm dia.

Reaming

1. Fit shop-made tool to crankcase and tighten in a vise.

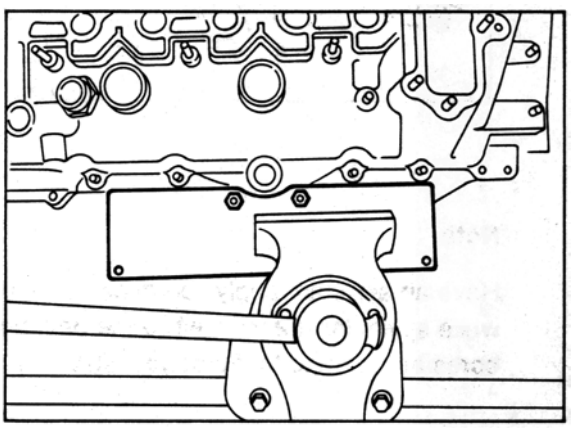

932-13

2. Place end bearing bushing EL 35 in bearing bore 1.

3. Place end bearing bushing EL 35 in bearing bore 8 and align using the guide rod.

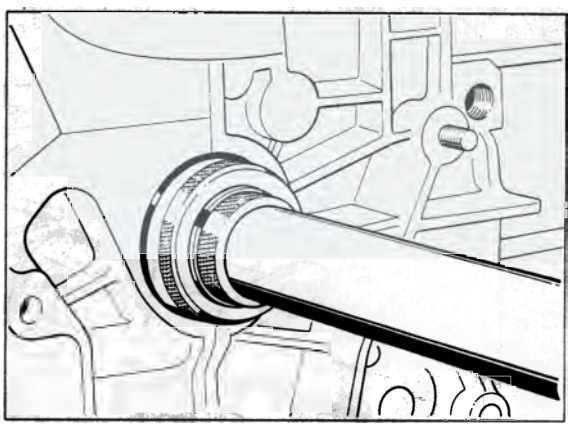

933-13

Printed in Germany – III, 1994

4. Now attach and align both guides for support of the guide rod.

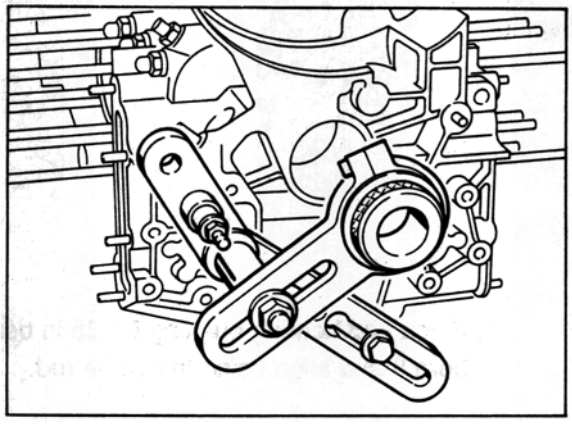

934-13

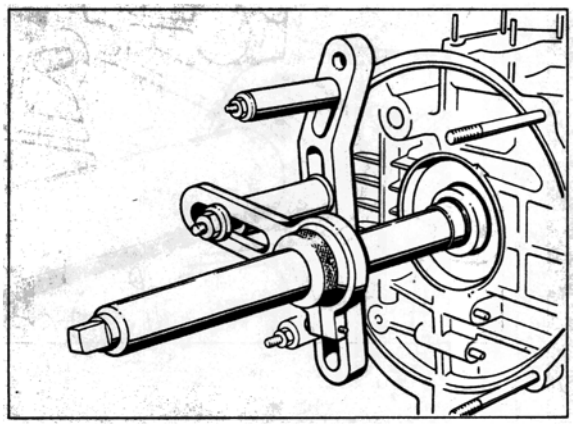

935-13

Note

When tightening the guides, make sure the guide rod does not bind, i.e. the guide rod must be checked for free rotation during the whole tightening process.

5. Remove end bearing bushings after tightening and aligning, respectively.

6. Insert guide rod complete with reamer into bearing 8 and ream all bearing bores slowly and steadily.

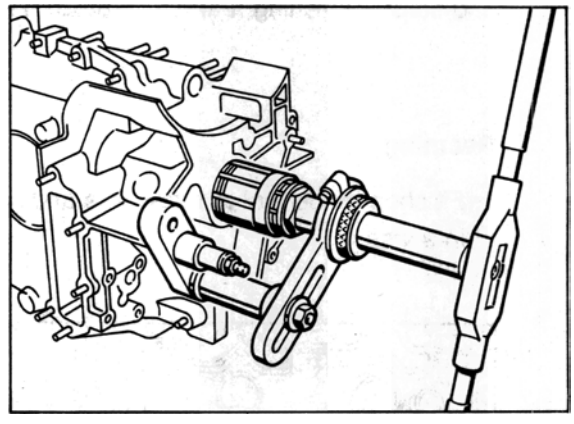

936-13

Note

Have an assistant apply liberal amounts of white spirits for greasing while the bearing bores are reamed to the correct size.

13 01 Engine Holder

Tools

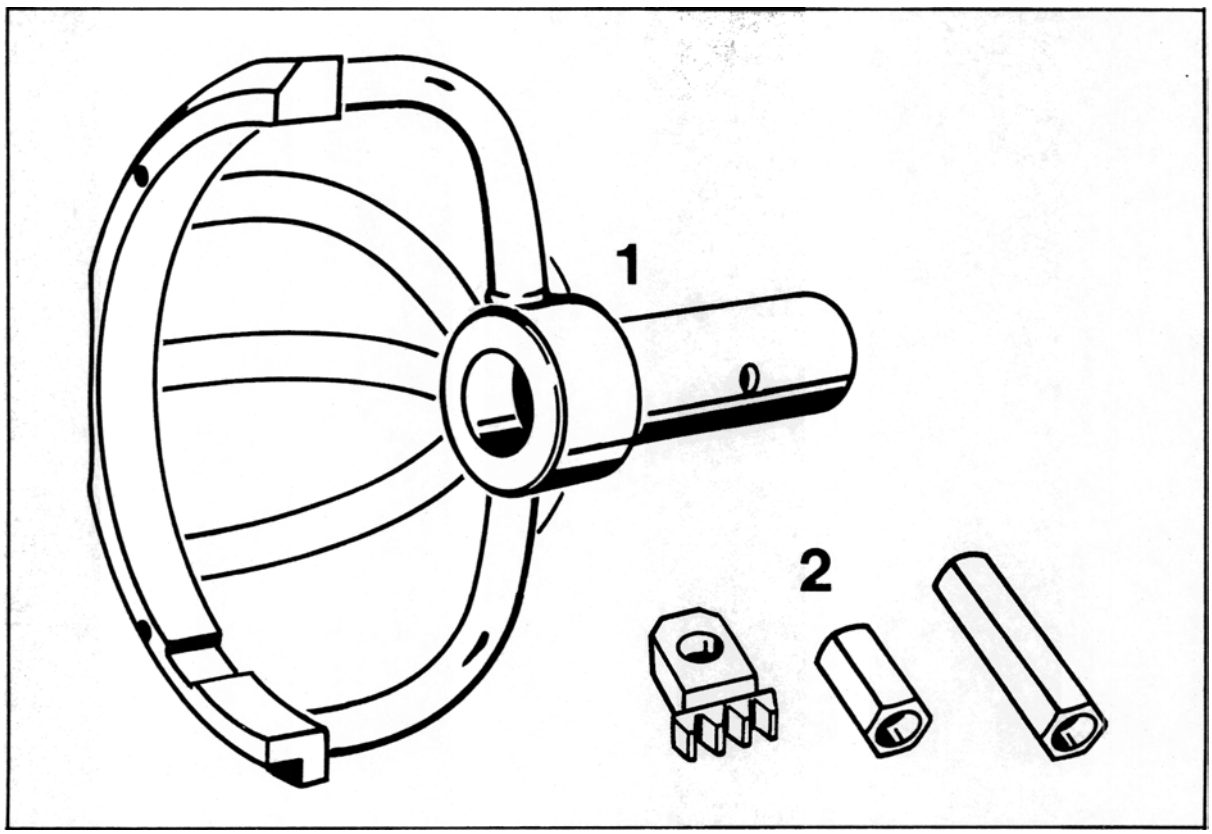

No.	Description	Special tool	Order No.	Explanation
1	Engine holder	P 201	000.721.201.00	Mount engine holder to right-hand crankcase section (cyl. no. 4...6). Use spacer sleeves (shop-made).
2	Toothed sector and mounting parts	P 201 b	000.721.201.20	

13 10 Identification of crankcase engine number and engine type

1. The crankcase sections are machined as a unit and must always be fitted in combination with each other. Observe identification mark.

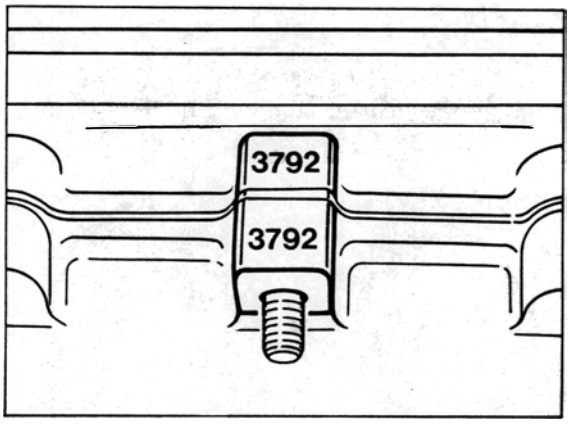

1413-13

2. Engine number and engine type identification

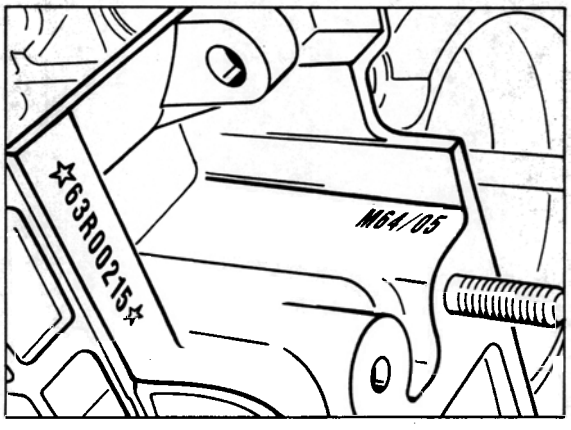

1414-13

3. Crankcase matching number

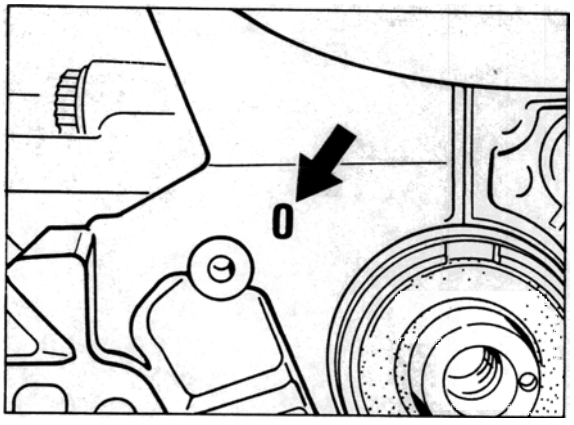

1415-13

4. Intermediate shaft matching number

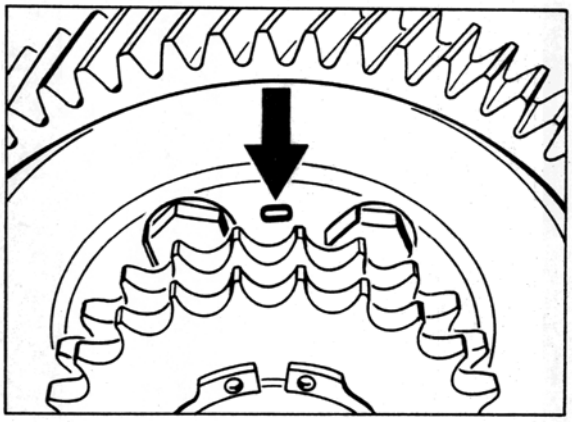

1416-13

13 48 Crankshaft - Standard and Repair Dimensions

Sizes	Main bearing d 1	Big end bearing d 2	Main bearing dia. d 3 (bearing 8)	
Standard	59.971...59.990	54.971...54.990	30.980...30.993	
- 0.25	59.721...59.740	54.721...54.740	30.730...30.743	
- 0.50	59.471...59.490	54.471...54.490	30.480...30.493	
Sizes	**Flange Ø d 4**	**Timing gear fit dia. d 5**	**Support dia. d 6**	**Guide bearing width A**
Standard	89.780...90.000	42.002...42.013	29.960...29.993	28.000...28.060
Wear dia.	89.580		29.670	

	Crankcase dia. Bearing 1...8
	Standard 65.000...65.019
	Oversize 65.250...65.269

Grind running surfaces for oil seals to 29.670 and 89.580 sizes only if score marks are too deep.
In other cases, repolish if required, Rt = 3.

Oil bores are rounded to R 0.5 after grinding.

Remove sharp edges with R = 0.2...0.5.

Max. permissible radial runout relative to support in-.-.-max. 0.04.

Surface treatment requirements: Gas carbonitrided PN 2063.

Do not straighten main bearings 3 and 5 after nitriding treatment.

Straightening the other main bearing by levering at the radii is permissible.

Running surfaces of main and big end bearing journals are polished after nitriding treatment.

Color coding or repair sizes:

1st repair size	blue dot
2nd repair size	green dot

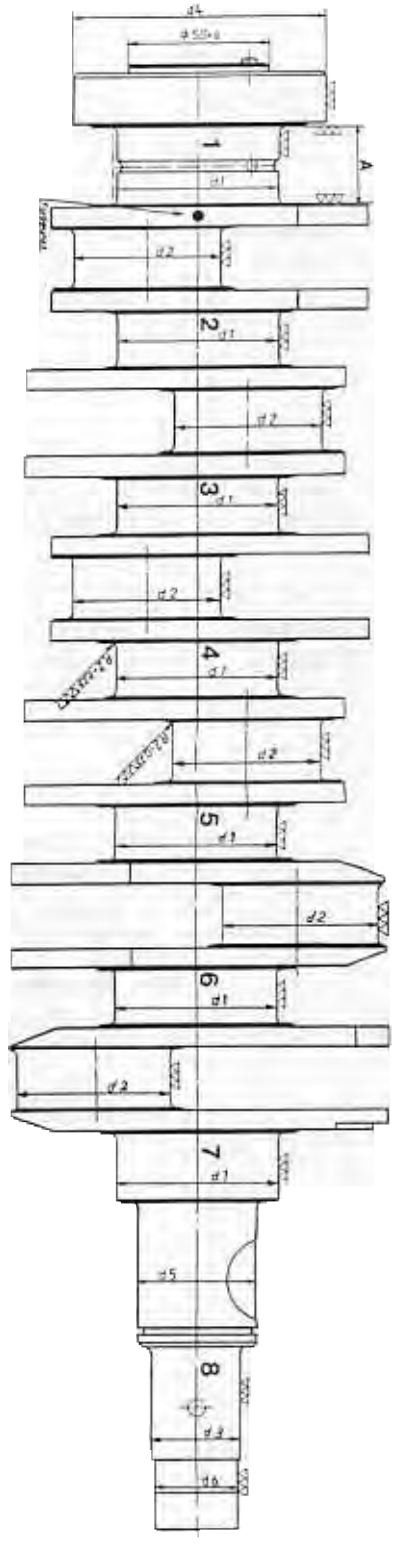

13 40 02 Con-rod weight classes

The con-rods are allocated to weight classes. The last digit of the part number indicates the weight class. The last digit is marked on the shaft of con-rods supplied as spare parts.

Note

The weight difference between con-rods installed in the same engine must not exceed 6 g. To determine the weight class, weigh the entire con-rod without the bearing shells.

The con-rod markings for spare parts are stamped with paint.

Type 1 and 2 con-rods are no longer available as spare parts.
If con-rods need to be replaced, a complete set of type 3 con-rods must be installed.

Note

Type 3 con-rods are also available as individual parts.

Type 1 (from the start of 993 production)

Weight from (grams)	to (grams)	Weight group for spare part	Part no. of replacement con-rod	Code on con-rod
508	514	1	993.103.020.50	50
	520	2	993.103.020.51	51
520	526	3	993.103.020.52	52
	532	4	993.103.020.53	53
	538	5	993.103.020.54	54
	544	6	993.103.020.55	55
544	550	7	993.103.020.56	56

Type 2

From engine no.: M64/05 63 S 02522 - 05847 / M64/06 63 S 51344 - 52684 / M64/07 64 S 02413 - 04238 / M64/08 64 S 50791 - 51180

Weight from (grams)	to (grams)	Weight group for spare part	Part no. of replacement con-rod	Code on con-rod
	524	1	993.103.020.57	57
	530	2	993.103.020.58	58
	536	3	993.103.020.59	59
	542	4	993.103.020.60	60
542	548	5	993.103.020.61	61
548	554	6	993.103.020.62	62

Type 3

From engine no. M64/05 63 S 05848 / M64/06 63 S 52685 / M64/07 64 S 04238 / M64/08 64 S 51181 / M64/20 63 S 85654 / M64/60 61 T 00932

Weight from (grams)	to (grams)	Weight group for spare part	Part no. of replacement con-rod	Code on con-rod
		1	993.103.020.64	64
	546	2	993.103.020.65	65
	552	3	993.103.020.66	66
	558	4	993.103.020.67	67
	564	5	993.103.020.68	68
	570	6	993.103.020.69	69

37 D ma ıtli ıg nd sem ra kshaft

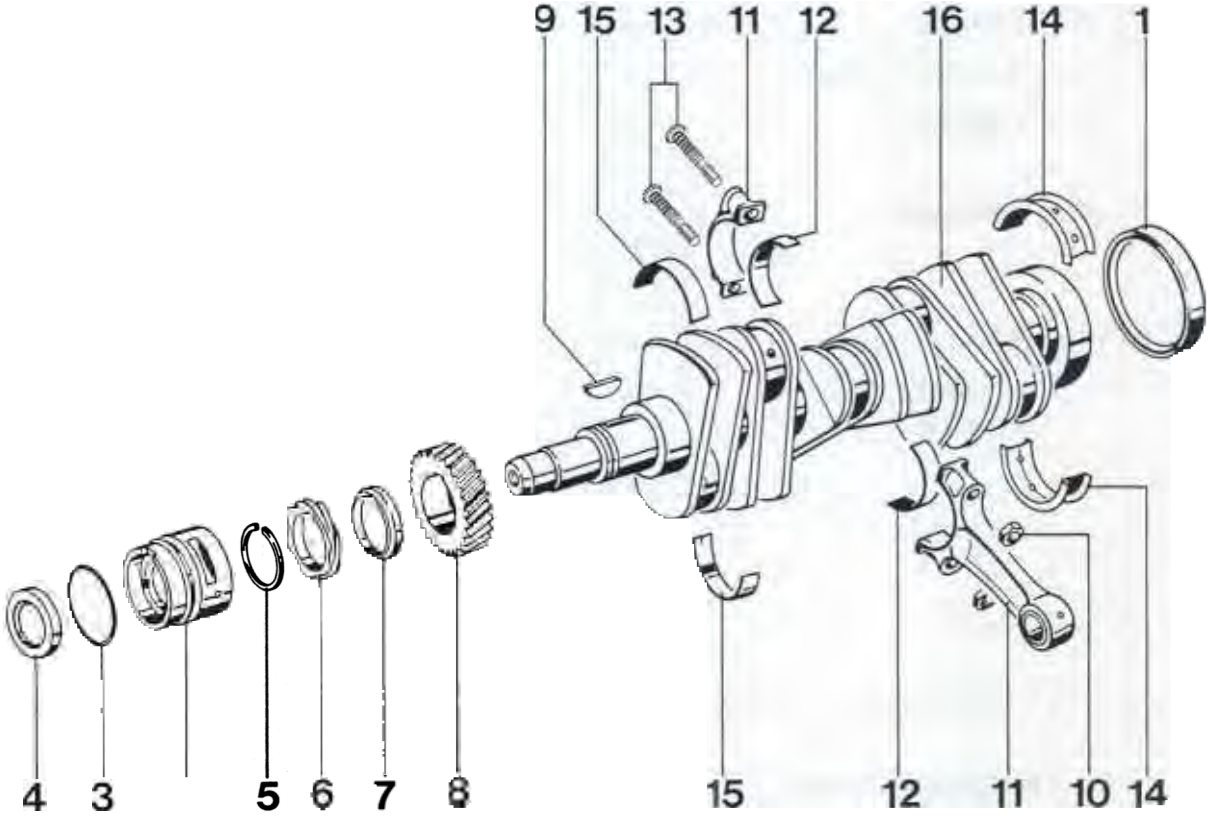

No.	Designation	Qty.	Note: Removal	Installation
1	Oil seal	1		Replace
2	Bearing bushing for bearing No. 8	1		Apply oil to bushing
3	Sealing ring	1		Replace
4	Oil seal	1		Replace
5	Snap ring	1		
6	Distributor drive pinion	1		
7	Spacer ring	1		Observe correct installation position
8	Timing gear	1		Matched with intermediate shaft, fit only as an assembly
9	Woodruff key	1		
10	Connecting rod nut M 9 x 1.25	12		Tightening torque 1st tightening sequence: 30 Nm (22 ftlb.) Final tightening sequence: 1 x 90° ± 2° tightening angle, threads and seating face lightly oiled
11	Connecting rod	6		Observe installation position and weight
12	Big end bearing shell	12		Coat with oil
13	Connecting rod bolts	12		
14	Main thrust bearing shells 1	2		Coat with oil
15	Main bearing shells 2 - 7	12		Coat with oil
16	Crankshaft	1	Check for wear	Carry out sound check

13 40 38 Dismantling and assembling connecting rods

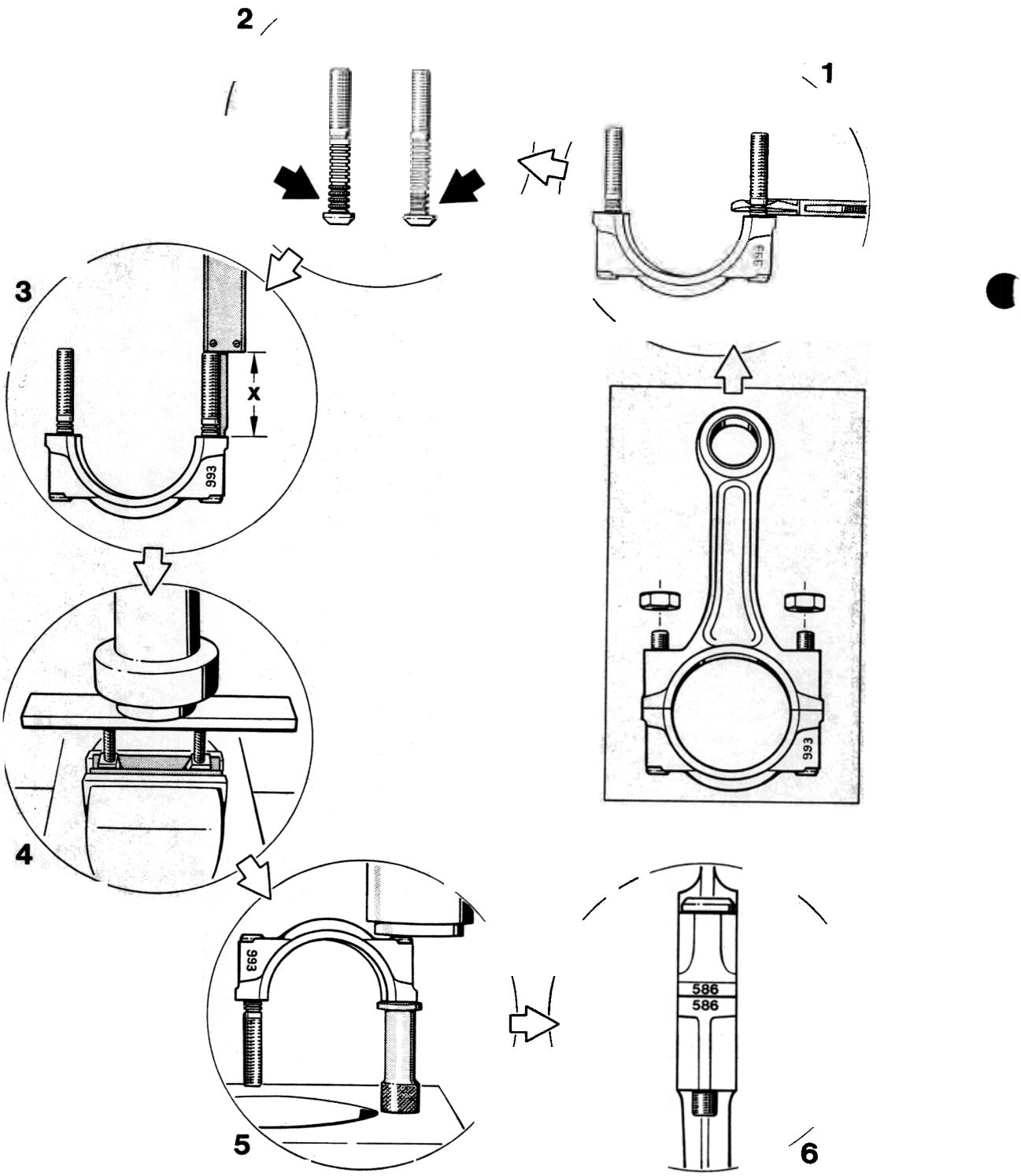

13 40 38 Dismantling and assembling connecting rods

Engine is dismantled

No.	Operation	Instructions
	Determine type of knurled ring bolt	To determine if a 3-ring knurled bolt or a 4-ring knurled bolt has been fitted with the knurled ring bolt (connecting rod bolt) being pressed in place, the groove diameter has to be measured.
1	Measure dia. of groove 1	Former **3-ring knurled bolt:** Ø Groove 1 = **7.95** to **8.20 mm** New **4-ring knurled bolt:** Ø Groove 1 = **7.70** to **7.85 mm**
2	Difference between both types of knurled ring bolts	The visual difference between the **3-ring knurled bolt** and the **4-ring knurled bolt** is only detectable when the bolt is pressed out.
3	Determine elongation of knurled ring bolts	Before reassembling the connecting rods, make sure the elongation of the knurled ring bolts is checked. If **dimension X** (38.3 mm) is exceeded, the connecting rod bolts have to be **replaced**. **Note:** The bolts cannot be replaced on connecting rods fitted with 3-ring knurled bolts. In this case, the entire connecting rod assembly has to be replaced. The 4-ring knurled bolt is also available as a spare part.
4	Press out 4-ring knurled bolt	Clamp connecting rod cap in a machine vise, inserting aluminum sheet strips on both sides to protect the cap. Press out both 4-ring knurled bolts simultaneously.

No.	Operation	Instructions
5	Press in 4-ring knurled bolt	Insert new 4-ring knurled bolt manually into former (old) splines. **Note:** To avoid damaging the separation joint, use an aluminum sleeve, e.g. from Special Tool set P 140 (cylinder retaining sleeves). Press in 4-ring knurled bolt until it is seated at the stop.
6	Assemble connecting rod	**Always use new connecting rod nuts.** When reassembling the connecting rod, always make sure the **matching numbers** are located on the **same side**.
	Tightening specifications	**Apply a thin coat of oil to threads and seating surfaces.** **Initial tightening: 30 Nm (22 ftlb.)** **Final tightening: 1 x 90°**
	Checking	Scribe a mark on connecting rod and connecting rod nut. Tighten to **60 Nm (44 ftlb.)** to check the **tight fit** of the knurled ring bolt. **If the knurled ring bolt starts to rotate at this torque or if a torque of 60 Nm (44 ftlb.) cannot be reached, the entire connecting rod assembly has to be replaced.**

13 59 19 Removing and installing crankshaft oil seal

Removal

1. Deform oil seal at crankcase cutout using a drift or a cross-cut chisel and lever out with a screwdriver.

Installing

1. Checking sealing lip running surface on crankshaft.

2. Clean oil seal seating surface in crankcase. If required, deburr outer edge with a scraper and remove burrs.

3. Coat running surface for sealing lip with oil and install oil seal w. **assembly tool 9517/1** and **thrust piece 9517** special tools.

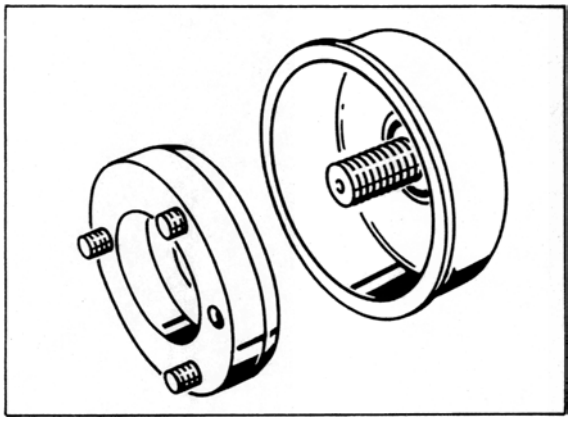

1369 - 13

Note

The oil seal must be pressed in until it is recessed **2 mm** below the flange of the crankcase.

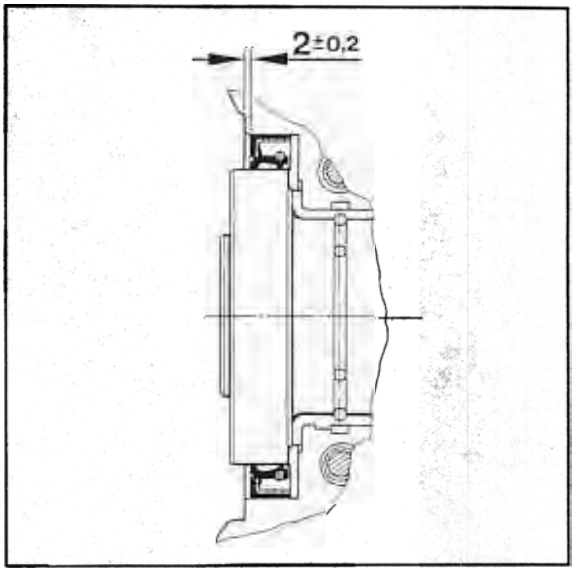

1732 - 13

13 10 03 Measuring pistons and cylinders

Tolerance group stamped	Cylinder Ø	Piston Ø
0	100.000 - 100.007	99.970 - 99.980
1	100.007 - 100.014	99.977 - 99.987
2	100.014 - 100.021	99.984 - 99.994
3	100.021 - 100.028	99.991 - 100.001

Cylinder-to-piston clearance 0.02 - 0.03

Piston identification

The following marks are stamped on the upper piston crown section (installation position):

Letter "E" in the middle (towards inlet), with change level ID (internal Mahle ID) to the right; the tolerance group (0, 1, 2, 3) is indicated to the left of the "E", and the weight class is indicated next to the tolerance group.

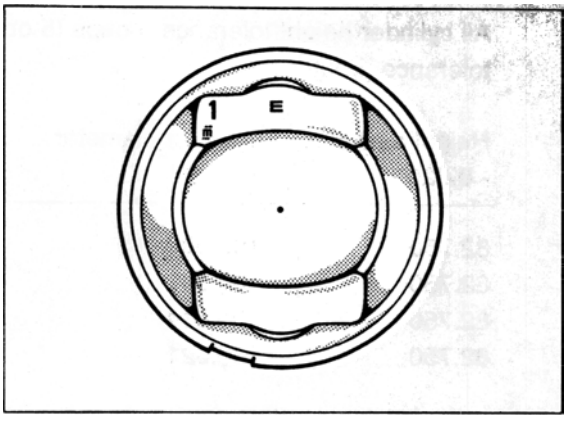

1631-10

Note:

The signs – – (minus minus) to indicate the weight group may also appear in vertical direction.

Cylinder identification

The following IDs are stamped in the opposite side of the knock sensor bridge mounting lug:

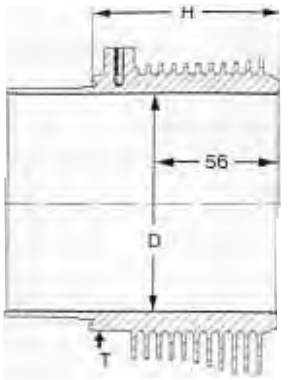

Cylinder dia. tolerance group,
e.g. group 0
and cylinder height tolerance group

e.g. height 5

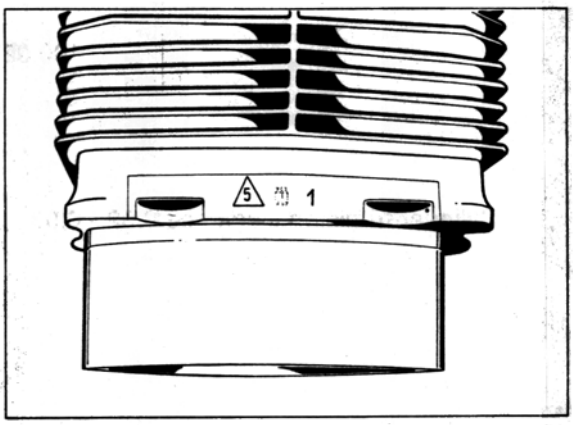

All cylinder height tolerance groups (5 or 6) are further subdivided into the cylinder diameter tolerance group.

Height size H - 0.020	Cylinder diameter + 0.007	Stamped groups	
82.750	100.000	0	5
82.750	100.007	1	
82.750	100.014	2	
82.750	100.021	3	
82.770	100.000	0	6
82.770	100.007	1	
82.770	100.014	2	
82.770	100.021	3	

Fit only cylinders of the same height group (5 or 6) to one single side of the engine.

13 13 37 Dismantling and assembling pistons and cylinders

Tools

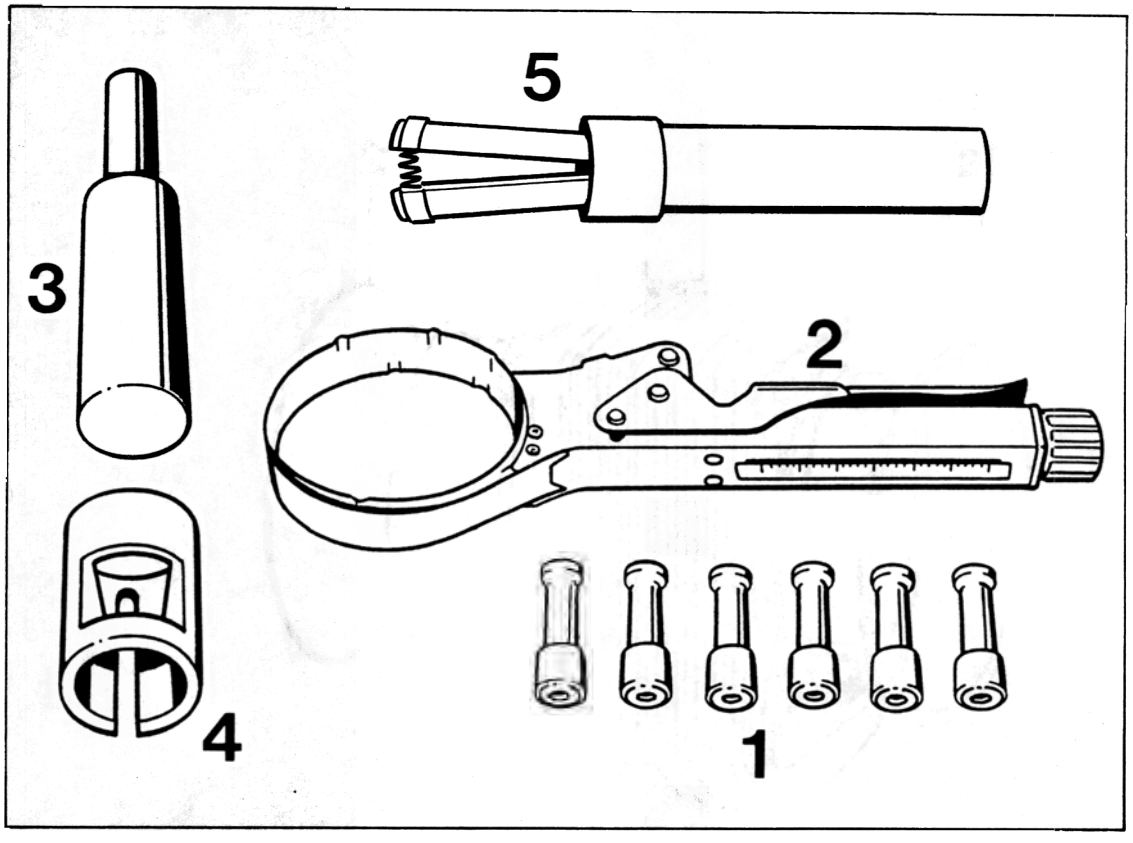

No.	Designation	Special tool	Order number	Explanation
1	Support for cylinder	P 140	000.721.140.00	
2	Piston ring compressor			Standard, e.g. Hazet 794-U-3
3	Front thrust piece from front thrust piece	9500 9500/4	000.721.950.00 000.721.950.04	for piston pin, 13 mm dia. for piston pin, 11 mm dia. (special-size piston pins)
4	Assembly sleeve	9500/2	000.721.950.02	
5	Assembly tool for snap ring	9500/3	000.721.950.03	For preassembly of snap ring to 9500/2

13 10 37 Dismantling and assembl g pi to nd cylinde

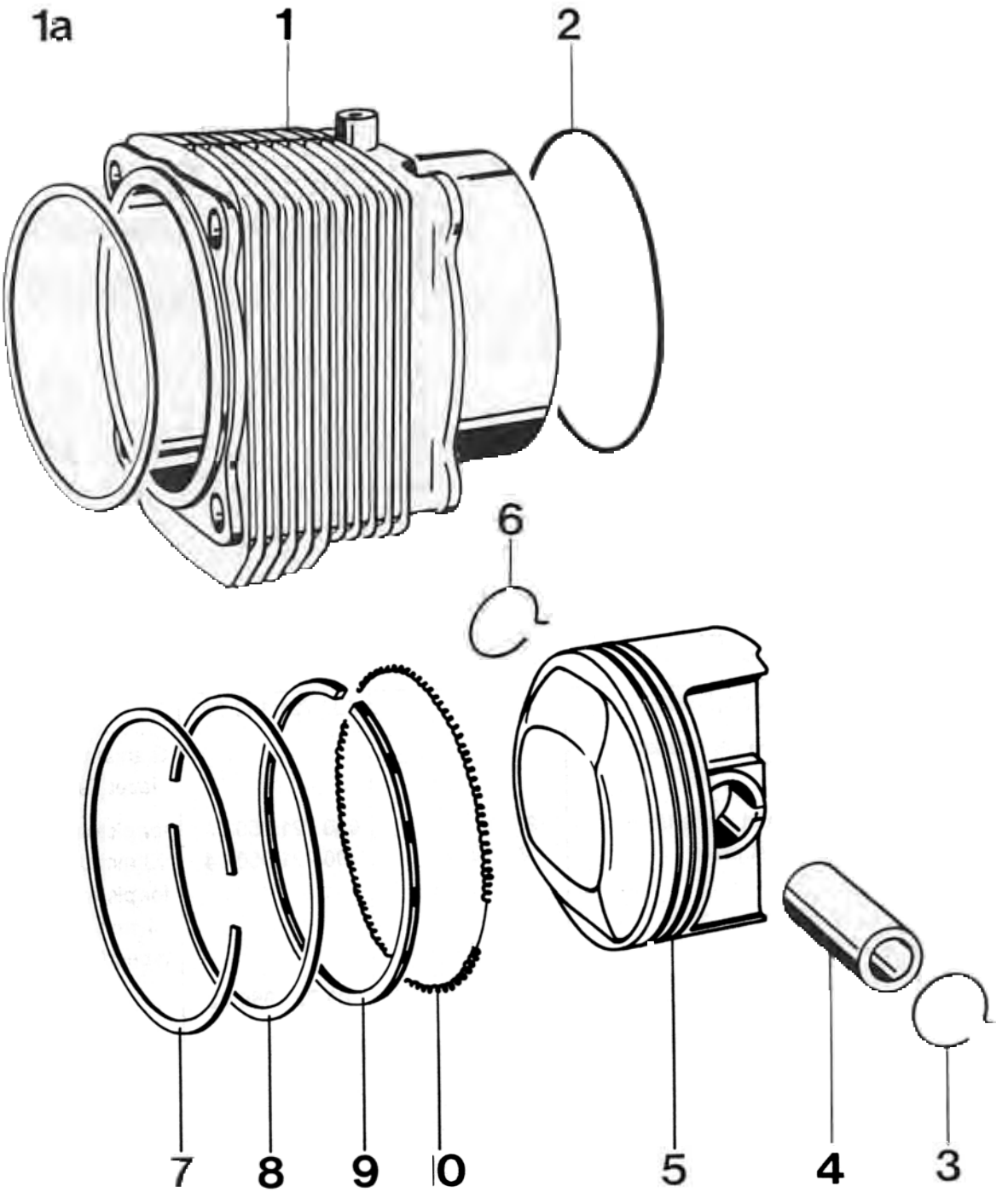

No.	Designation	Qty.	Note: Removal	Installation
1	Cylinder	6	Mark installation position	Check, oil bore
1a	Cylinder head gasket	6		Always replace with new parts, fit dry
2	O-ring 102 x 2	6		Always replace with new parts
3	Snap ring	6	Lever out	Always replace with new parts, check for correct seating, use Special Tool 9500
4	Piston pin	6	Must remain assigned to the corresponding piston and must not be mixed even within the same engine. Observe this when dismantling and assembling the engine and mark parts accordingly	Observe inside dia., use suitable thrust pin
5	Piston	6	Mark installation position	Preassemble piston in cylinder
6	Snap ring	6	Lever out	Must always be replaced, preassemble in piston, make sure it is seated correctly. Use Special Tools 9500, 9500/2, 9500/3
7	Taper faced ring, groove 1	6		
8	Stepped taper faced ring, groove 2	6		
9	Double-bevelled oil control ring, groove 3	6		
10	Tubular spring, groove 3	6		

13 10 37 Dismantling and assembling pistons and cylinders

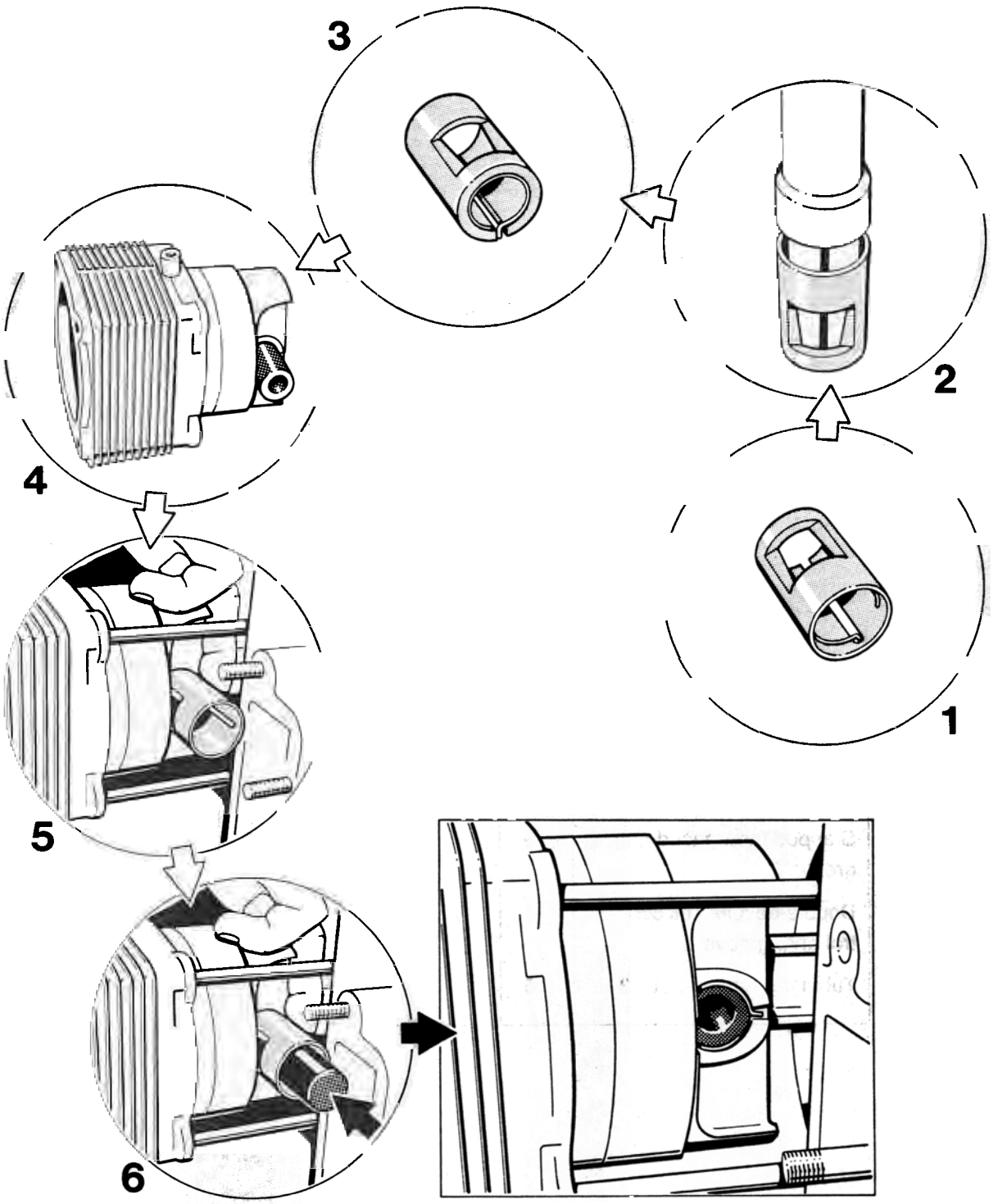

13 10 37 Dismantling and assembling pistons and cylinders

No.	Operation	Instructions
	Install snap ring	Place new snap ring manually into tapered assembly sleeve 9500/2
2	Engage snap ring	Using assembly tool 9500/3, push snap ring down until the snap ring engages audibly into the groove of the assembly sleeve 9500/2. **Caution:** Make sure the snap ring is preassembled with the tapered assembly sleeve on a solid support but only immediately before fitting the assembly to the piston pin bore.
3	Visual check	Remove assembly tool 9500/3 and visually check snap ring for correct seating in the groove of the tapered assembly sleeve 9500/2. **Caution:** **The snap ring may pop out of the assembly sleeve — Be careful to avoid injury!**
4	Preassemble pistons to cylinders	Preassemble pistons and cylinders on a plastic or wooden support (to protect the cylinder) off the engine.
5	Place preassembled cylinder on studs and place assembly sleeve into position	Place preassembled cylinder on studs. Place tapered assembly sleeve 9500/2 on piston pin bore.
6	Fit snap ring to piston	Insert plunger into tapered assembly sleeve. The smaller diameter of the plunger is used to provide guidance in the piston pin. Use plunger to press the snap ring into the piston pin snap ring groove in the piston. The snap ring must engage with an audible click. **Note** A helper should be available to press the snap ring into the piston.
	Visual check	**Visually check snap rings for correct seating after fitting.**

Assembly Note

1. Lift off cylinder head gasket only in this reinforced area (arrows) with a suitable tool. If required, soak sealant residues with adhesive remover, e.g. by Loctite, and remove carefully.

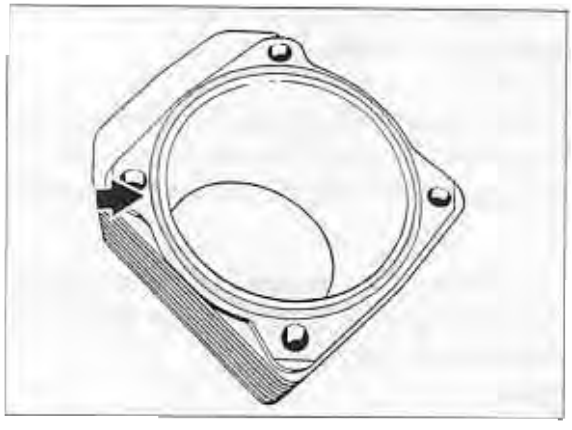

1011-13

2. The piston pins are fitted with circlips with rotation protection. Replace the circlips whenever the pistons have been dismantled.

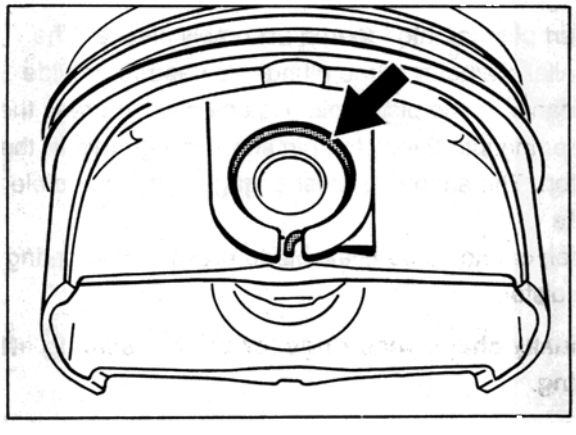

1621-13

13 10 Pistons

Piston weight classes

The weight of the pistons has been changed for technical reasons. The new pistons are lighter. If it is necessary to remplace indi-vidual pistons and cylinders during repair work, first check which pistons are installed.

The marks on the piston can be inspected by using a steel brush to remove deposits. Otherwise, the pistons must be weighed!

Distinguishing features:

Old „heavy" piston
Stamp on piston crown: **11/0**

New „light" piston
Stamp on piston crown: **24/0**

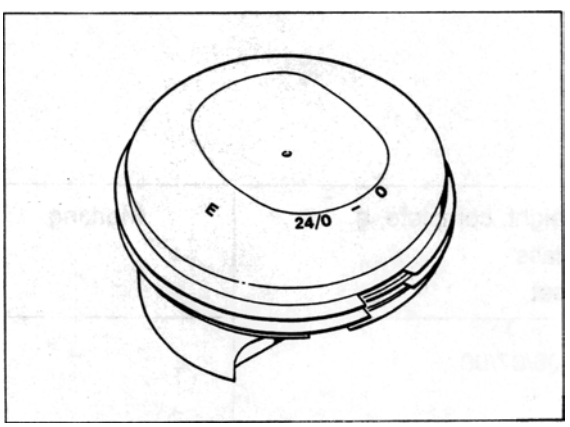

1907-15

Only the new **„light"** pistons are now available.

Compensating for weight differences

The new and the old pistons can be installed in the same engine.
However, the weight difference must be compensated.

Compensation is effected by installing **a 14 g heavier replacement piston pin** (dimensions 23 x 11 x 54).

To install the piston pin, special tool **pressure piece 9500/4**, order no. 000 721 950 04, must be used.

13 10 Pistons

Weight classes for „heavy“ pistons

Weight classes for **Mahle pistons**
Pistons weighed complete with fittings (piston pins, piston rings, snap ring)

	Piston weight, complete, g Weight class within a set	Marking
Engine type	M 64/05/06/07/08	
Standard production	606 - 610 610 - 614	
max. weight difference 4 g	614 - 618 618 - 622	+ ++
For replacement parts max. diff. 8 g	606 - 614 614 - 622	– – or – + or ++

Weight classes for „light“ pistons

	Piston weight, complete, g Weight class within a set	Marking
Engine type	M 64/05/06/07/08	
Standard production	592 - 596 596 - 600	
max. weight difference 4 g	600 - 604 604 - 608	+ ++
For replacement parts max. diff. 8 g	592 - 600 600 - 608	– – or – + or ++

13 78 05 Checking and adjusting drive belts

Tool

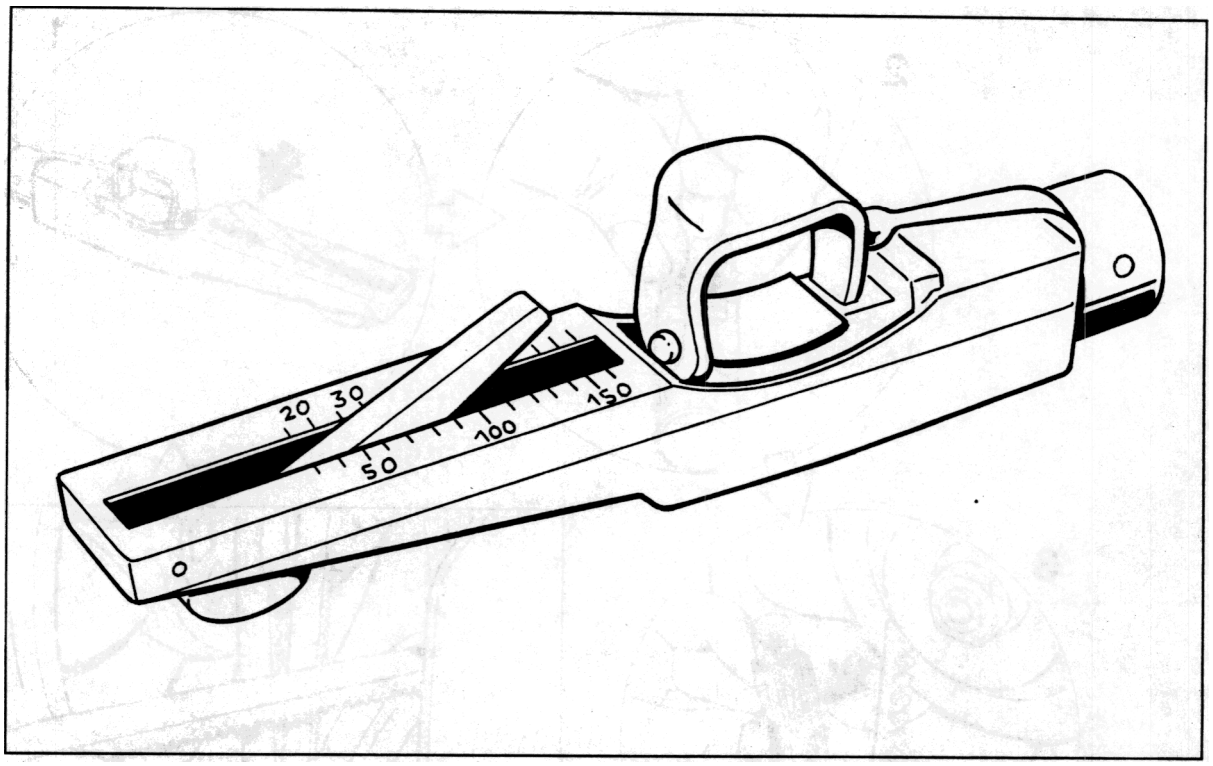

1985-13

No.	Description	Special Tool	Order No.	Explanation
	Belt tension measuring instrument	9574	000 721 957 40	

Operating the measuring instrument

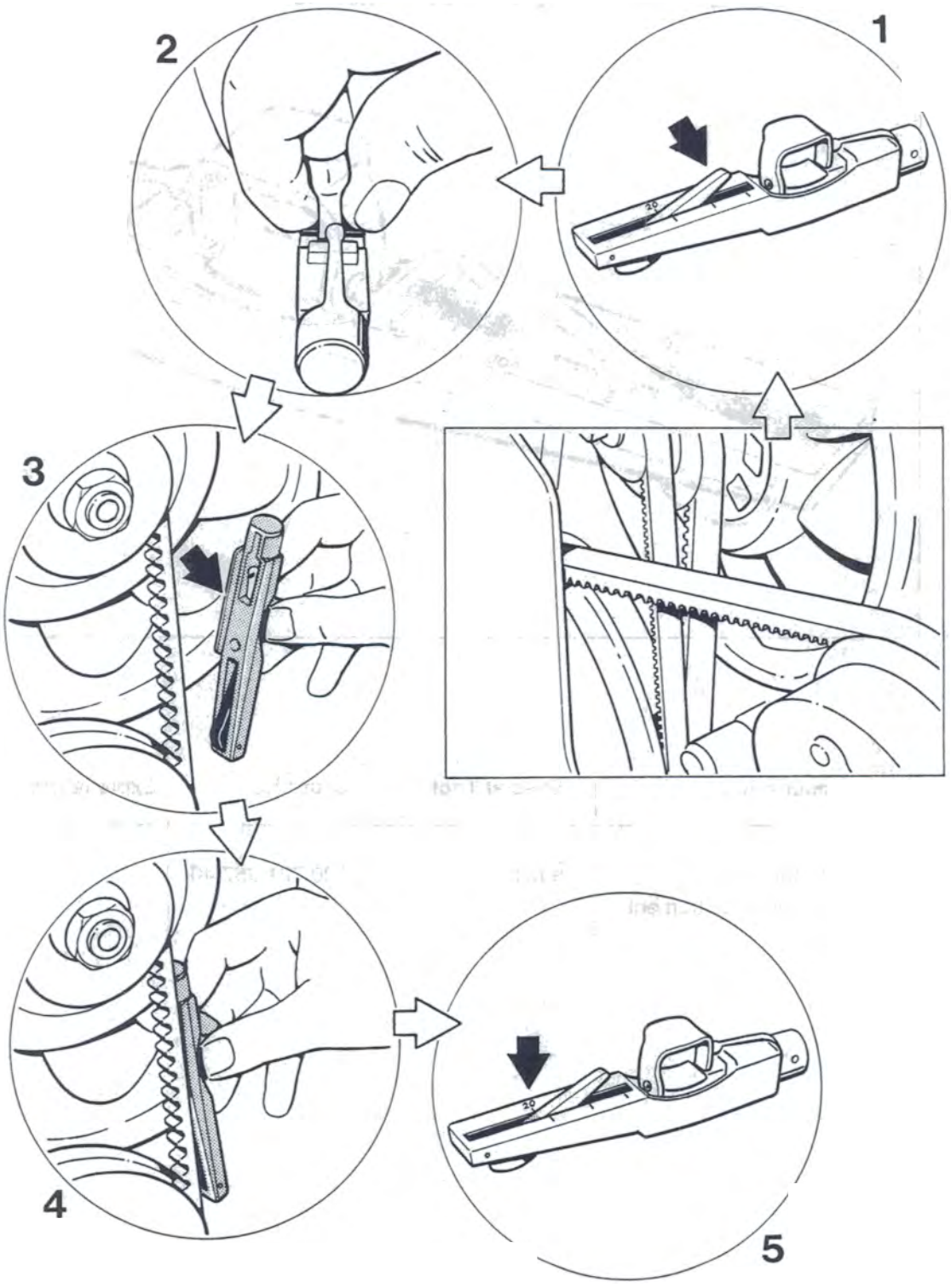

Operating the measuring instrument

No.	Operation	Instructions
	Prepare measuring instrument for testing	Lower pointer into measuring instrument.
2	Pick up measuring instrument	Grasp rubber strap between thumb and index finger.
3	Position measuring instrument	Position measuring instrument in **center** between pulleys on the drive belt. The lateral stop of the instrument must rest on the side of the V-belt.
4	Measure belt tension	Press pushbutton to apply **uniform pressure in perpendicular direction** on top of V-belt until the detent spring can be **heard** (or felt) to disengage. After the detent spring has disengaged, the measuring instrument or the pushbutton, respectively, must not be pressed anymore as the reading will otherwise be incorrect.
5	Read off measurement	Lift measuring instrument carefully off the V-belt. **Caution:** Do not push against instrument when lifting off the instrument as sudden impacts may alter the position of the pointer and may give a faulty reading. Read off measurement (tensioning value) at the point of intersection of the pointer with the **upper scale** (KG scale).

Checking and/or adjusting alternator and fan wheel drive belt

Caution: Make sure the ignition key is pulled off whenever measurements are made.

Checking used drive belts:

Use belt tension measuring instrument (Special Tool 9574) to check tension.

A description of how to use the Special Tool is contained in Repair Group 13, page 13 - 30.

Retensioning the belt is only required if the belt tension displayed at the measuring instrument is less than 15 scale increments when the engine is cold and less than 20 scale increments when the engine is hot.

Retensioning the belt

Retension the belt as described in the General Adjustment Notes section.
Before measuring the belt tension, start engine and let engine idle briefly.

Tension:

Cold engine:	15 to 23 scale increments
Engine at operating temperature:	20 to 28 scale increments

Fitting a new belt

When fitting a new belt, be sure to observe the correct **assembly sequence** in order to avoid any loss of belt tension during vehicle operation.

1. Fit new belt. Adjust tension by inserting or removing shims as required.
   Shims are available for belt tensioning in thicknesses of 0.5 mm and 0.7 mm. The 0.7 mm shim is identified by a 2 mm dia. drill hole.

2. Before measuring the belt tension, start engine once more and run engine at idle briefly.

   Tension:
   Cold engine: 23 to 35 scale increments

3. Run engine at idle for approx. 15 minutes or test drive vehicle for approx. 10 miles.
   Check tension again.
   Specification: 28 to 40 scale increments
   Retension if required.
   Test requirement: Engine at operating temperature

General adjustment notes

Fan wheel and alternator have separate drives.

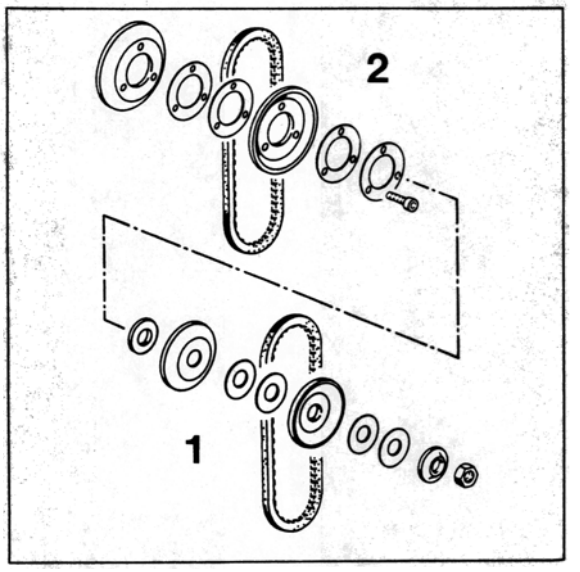

1863-27

1 = Alternator drive components
2 = Fan wheel drive components

Adjusting the V-belts

1. Use polygon wrench (999 571 052 02) to lock shaft and undo hexagon head nut. Remove shims and pulley half.

2. If belt tension is below specification, remove one shim from between pulley halves and refit in front of pulley half.
   Tighten hexagon head nut to 50 ± 5 Nm.

3. Three additional M 6 screws have to be undone for V-belt and fan wheel.

4. Use only V-belts that have been approved by the manufacturer.

Note

Rotate engine only at lower belt pulley or by operating the starter. After completing all operations, check to make sure that hexagon head nut has been tightened sufficiently on alternator shaft.

17 00 Lubrication (Engine oil circuit diagram)

Components

1 Oil tank
2 Pressure pump section
3 Pressure relief valve (opens at 5.3 bar)
4 Safety valve (opens at 9 bar)
5 Bracket with oil filter
6 Oil pressure sensor / remote temperature sensor
7 Instrument cluster
8 Crankshaft
9 Intermediate shaft
10 Camshaft
11 Hydraulic valve lifter
12 Oil gallery (Camshaft housing / oil supply)
13 Chain tensioner
14 Oil jets for piston cooling (open at 3.0 bar)
15 Return pump section
16 Full flow oil filter with thermostat housing (opens to oil cooler at 83 °C)
17 Oil cooler with fan and temperature switch (fan is switched on at 110 °C)
18 Crankcase breather
19 Throttle body with intake shroud

A - Pressure oil circuit
B - Return oil circuit
C - Breather line
D - Electrical system

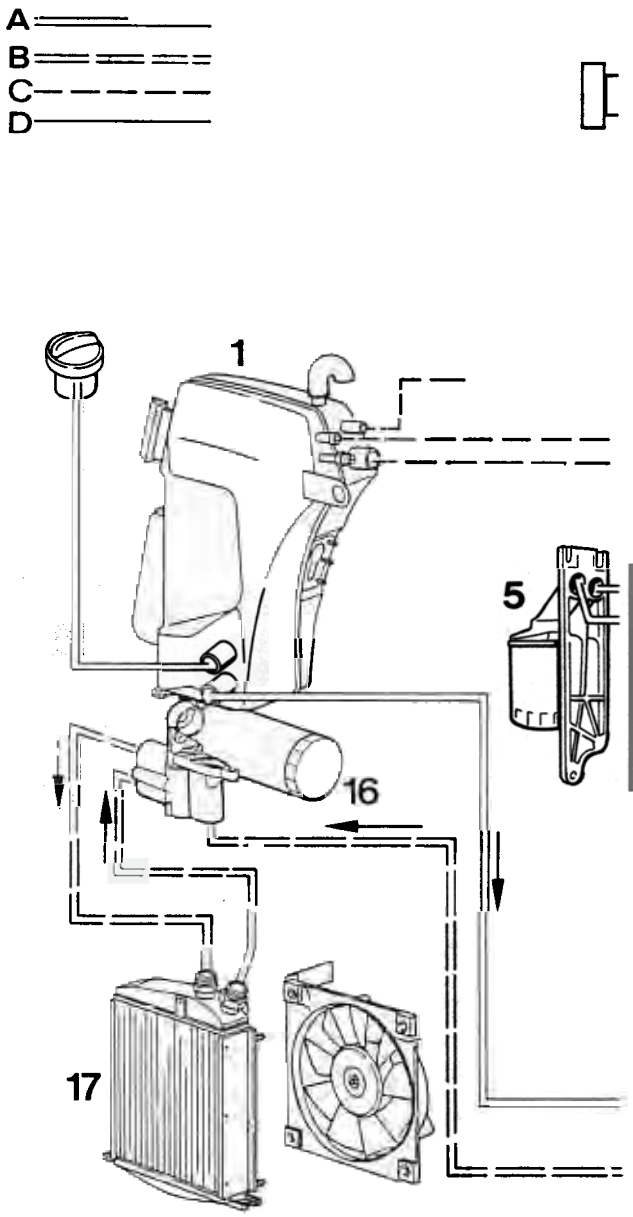

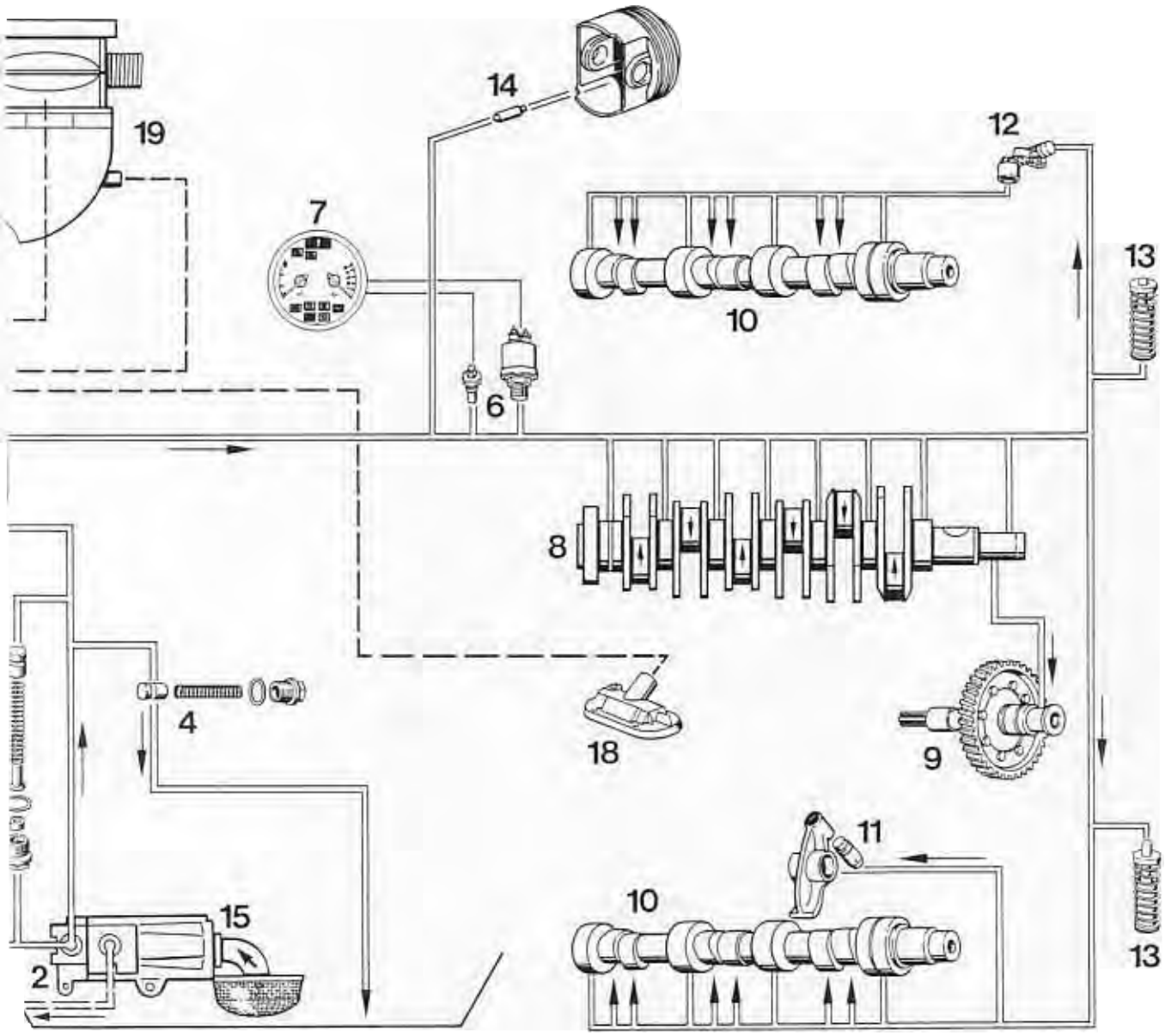
14
19
12
7
13
10
6
8
4
18
9
11
10
15
2
13

15 05 06 Checking and adjusting camshafts

(Adjusting the timing)

Tools

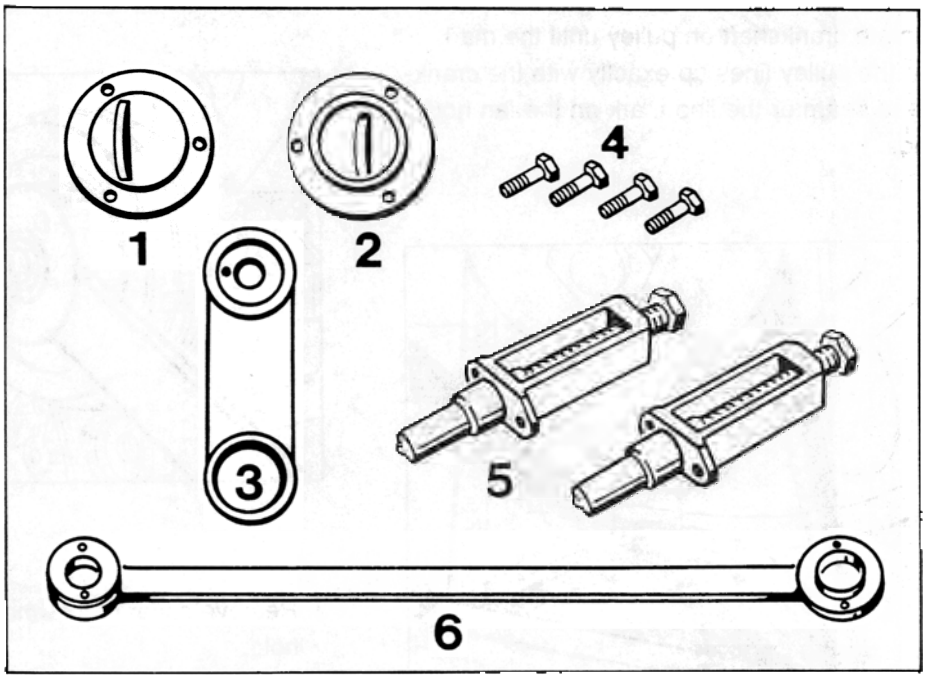

1457-15

No.	Designation	Special tool	Order number	Explanation
1	Locking tool for LH camshaft	9551	000.721.955.10	install 2 fit bolts in the 6^{H7} holes in the three-hole flange
2	Locking tool for RH camshaft	9552	000.721.955.20	install 2 fit bolts in the 6^{H7} holes in the three-hole flange
3	Locking tool for crankshaft	9553	000.721.955.30	
4	Fit bolt (4 pieces)	9554	000.721.955.40	Install fit bolts in oval hole of three-hole flange
5	Auxiliary chain tensioner	9401	000.721.940.10	
6	Pulley retaining wrench	9548	000.721.954.80	

15 05 06 Checking and adjusting camshafts

(Adjusting the timing)

Approximate adjustment

1. Rotate crankshaft on pulley until the mark on the pulley lines up exactly with the crankcase seam or the line mark on the fan housing.

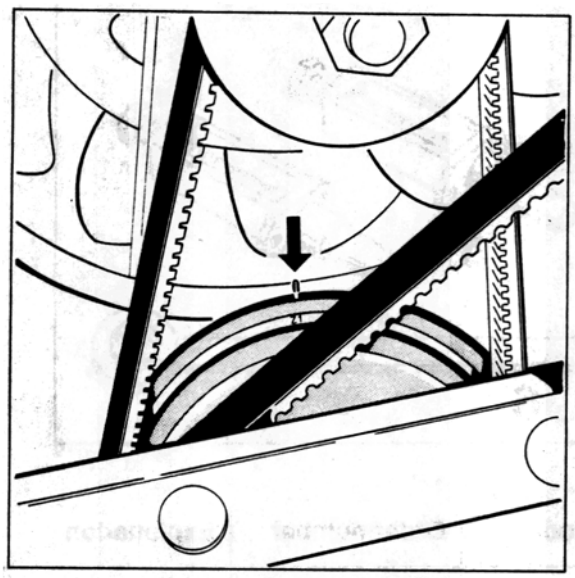

151-03

2. Remove pulley. Undo hexagon head bolt, having a helper lock the pulley with Special Tool 9548 (retaining wrench).

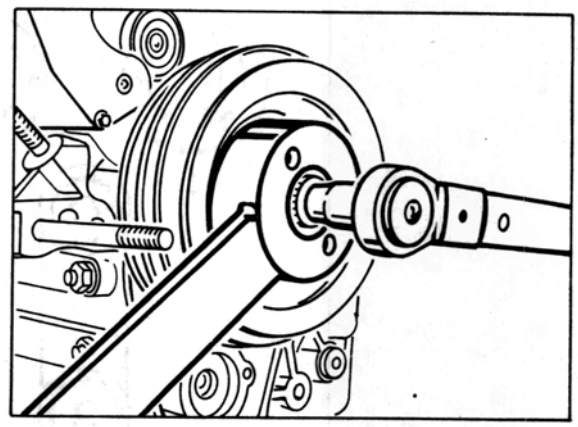

3. Remove cover of intermediate shaft access hole.

4. Place Special Tool 9553 (locking tool) into position.

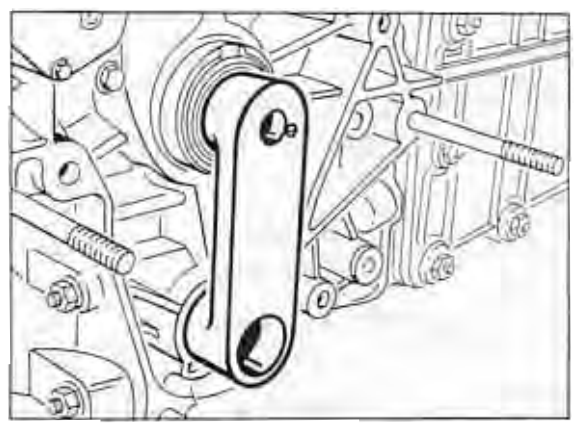

5. Turn both camshafts until punch mark faces up.

Note

If the mark is missing, rotate camshafts until woodruff key groove points up.

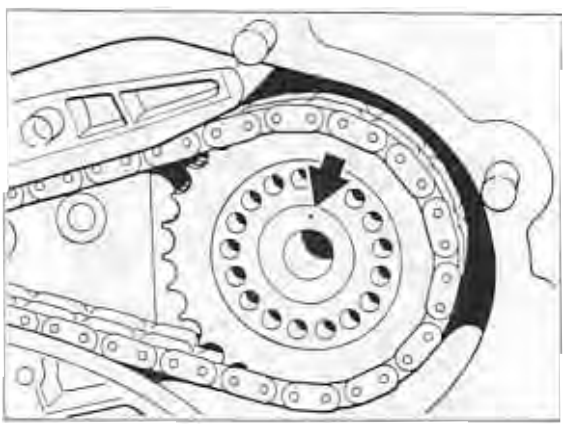

6. The camshafts may be aligned and rotated from the front (flywheel end) using Special Tools (locking devices) 9551 or 9552, respectively.

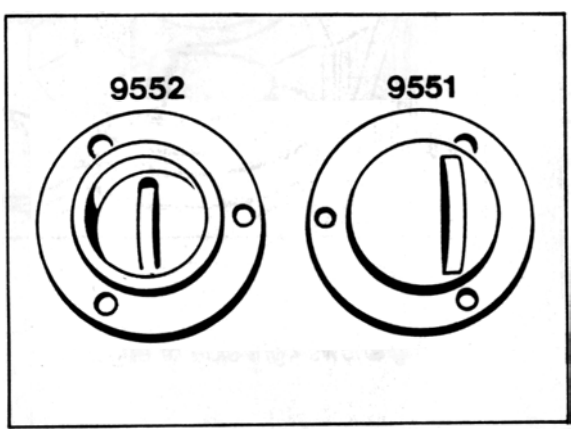

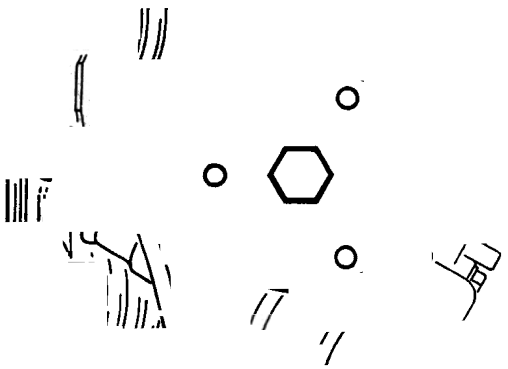

7. When the Z 1 mark on the pulley has been aligned with the seam and when the punch marks or woodruff key groove, respectively, point up, the engine is in the basic firing TDC for cylinder No. 1 and the overlap TDC for cylinder No. 4.

8. Fit auxiliary chain tensioner (Special Tool 9401).

Figure shows left-hand side of auxiliary chain tensioner

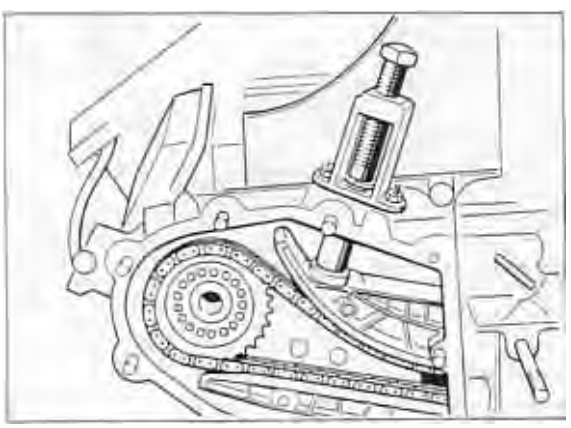

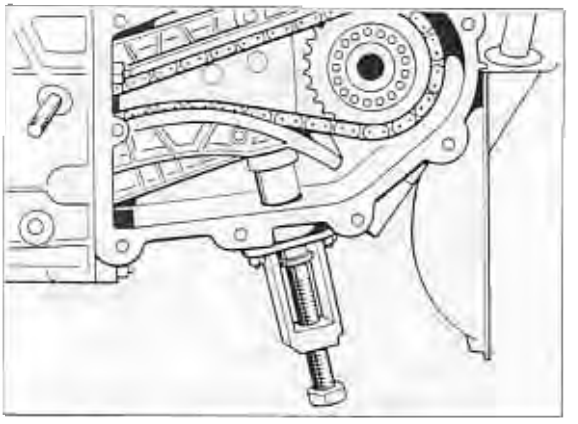

88-550

Note

To adjust or check the timing, the mechanical auxiliary chain tensioners must be fitted with the specified preload. The recess on the plunger must just barely remain visible. Adjusting or checking the timing with a dial gauge is no longer required. The locking tools also serve as adjustment gauges.

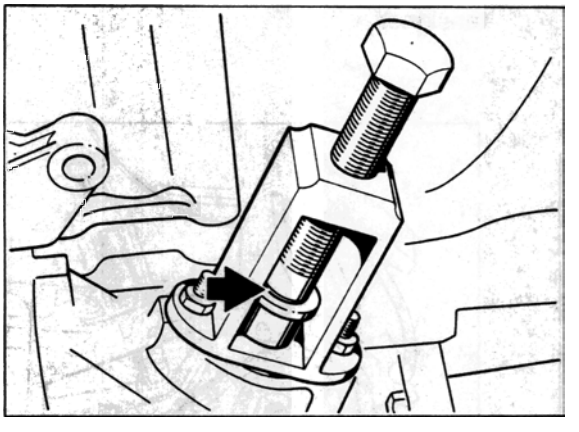

87-378

Precision adjustment

1. Place locking device 9551 on left-hand camshaft and locking device 9552 on right-hand camshaft and tighten them. Install fit bolts 9554 in oval hole in three-hole flange.

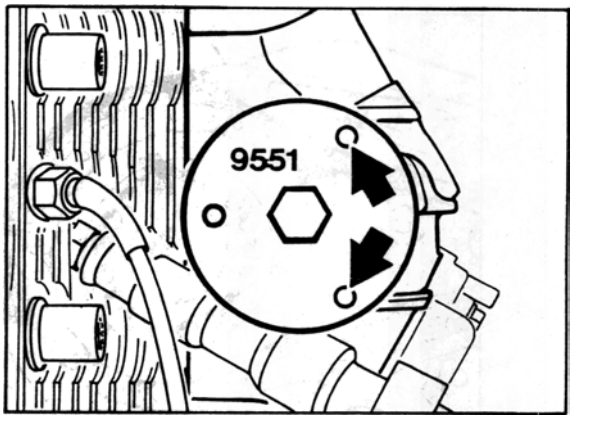

1465-15

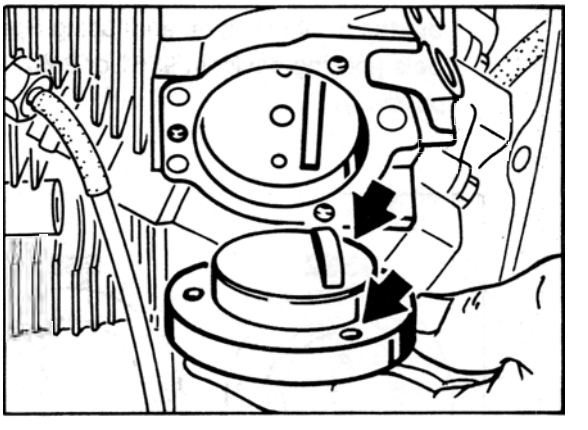

1461-15

Drawing shows right side of engine

Note

Adjusting or checking the timing with a dial gauge is no longer required. The locking tools also serve as adjustment gauges.
Caution:
At the same time, the locating pin on the chain sprocket or chain sprocket flange is no longer required. However, at the start of production, the locating pin was installed on some engines.

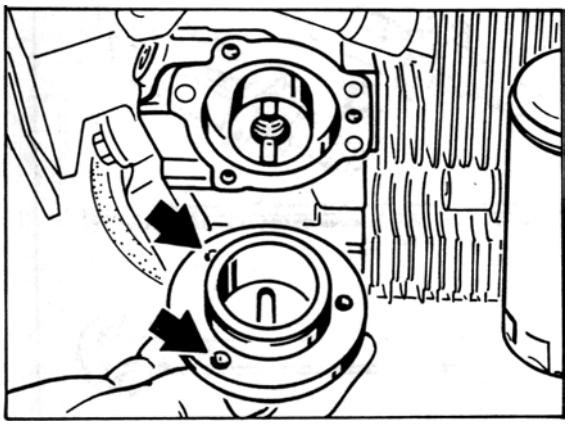

1460-15

Drawing shows rihgt side of engine

2. Apply a thin coat of **Optimoly HT** to hexagon head bolt threads. Tighten hexagon head bolts of left-hand and right-hand camshafts to 120 Nm (12 kpm).

3. After the adjustment has been completed, remove the auxiliary chain tensioner and refit original chain tensioner. Observe installation position!

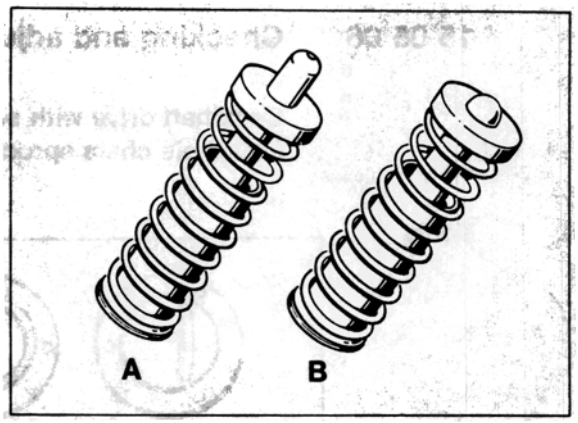

88-167

A - Left-hand chain tensioner. Oil supply hole hole points up.

B - Right-hand chain tensioner. Oil supply hole hole points down.

Note

The spring retainers are additionally marked with **„oben“** (**top**) and **„unten links“** (**bottom left**) or **„unten rechts“** (**bottom right**).

15 05 06 Checking and adjusting the camshafts

Camshaft drive with single-part chain sprocket flange (four-hole chain sprocktet) (adjust timing)

Tools

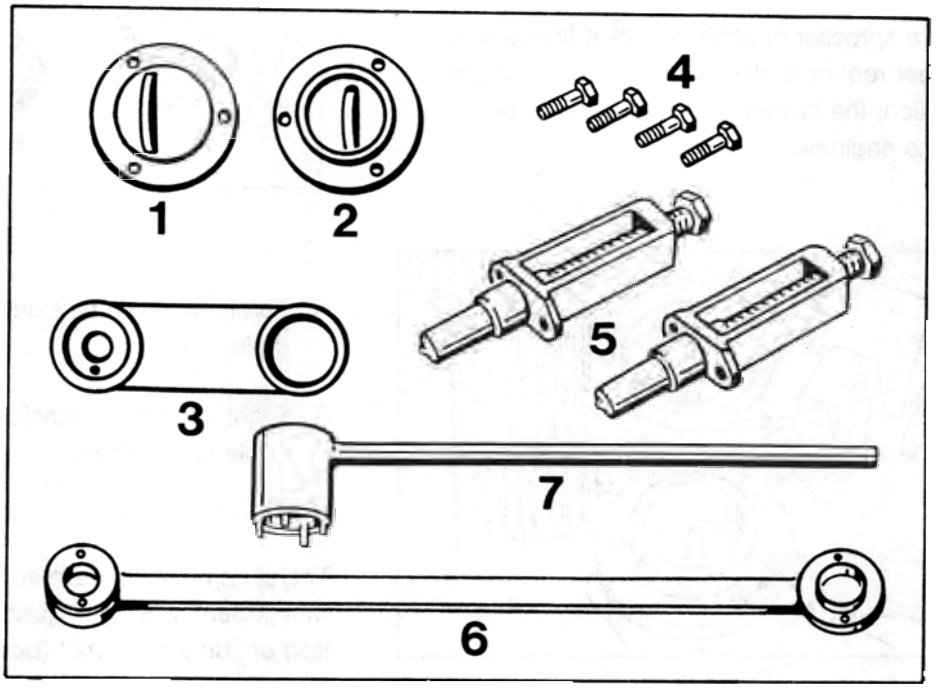

1457-15

No.	Designation	Special Tool	Order Number	Explanation
	Locking device for left camshaft	9551	000.721.955.10	Install 2 fit bolts into 6 ^{H7} holes of three-hole flange
2	Locking device for right camshaft	9552	000.721.955.20	Install 2 fit bolts into 6 ^{H7} holes of three-hole flange
3	Crankshaft locking device	9553	000.721.955.30	
4	Fit bolt (4 ea.)	9554	000.721.955.40	
5	Auxiliary chain tensioner	9401	000.721.940.10	
6	Pulley retaining wrench	9548	000.721.954.80	
7	Retaining wrench	9582	000.721.958.20	

15 05 06 Checking and adjusting the camshafts

(Adjusting the timing)

Basic adjustment

Rotate crankshaft at pulley until the pulley mark is exactly in line with the separating joint on the crankcase or the line mark on the blower housing.

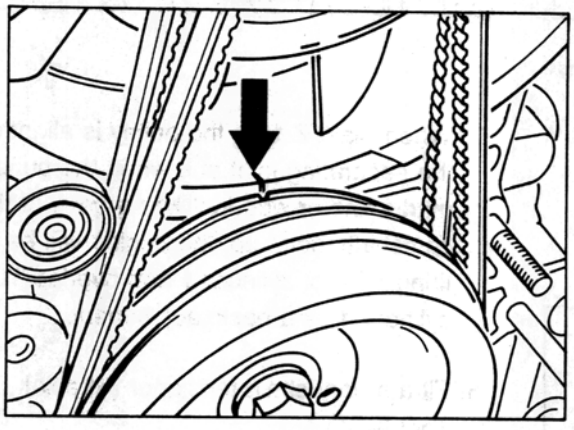

151-03

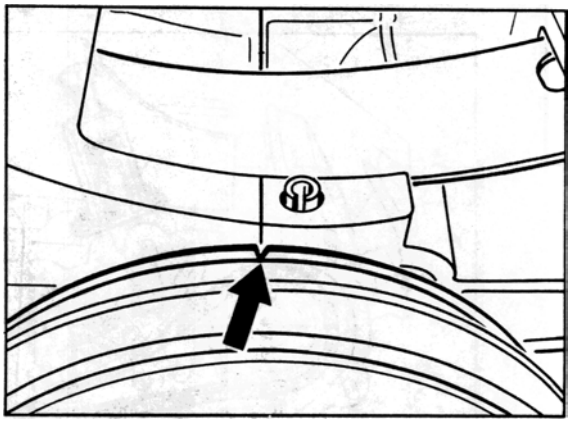

2160-15

2. Undo hexagon head bolt, having a helper use Special Tool 9548 (locking wrench) to lock. Take off pulley.

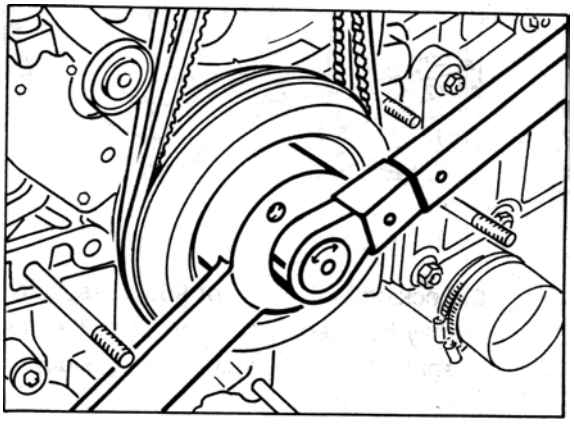

1464-15

3. Take off A/C compressor bracket.

4. Place Special Tool 9553 (locking device) into position.

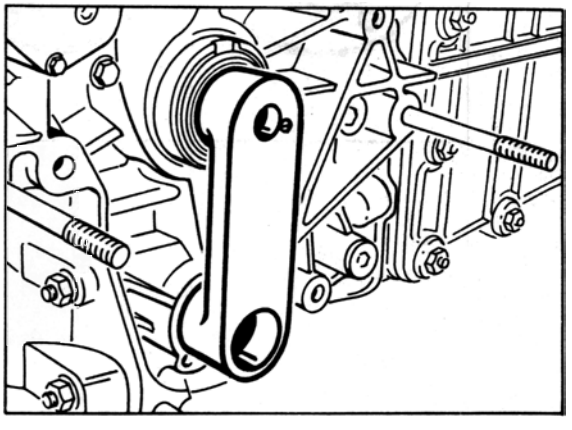

5. Turn both camshafts until punch mark points up.

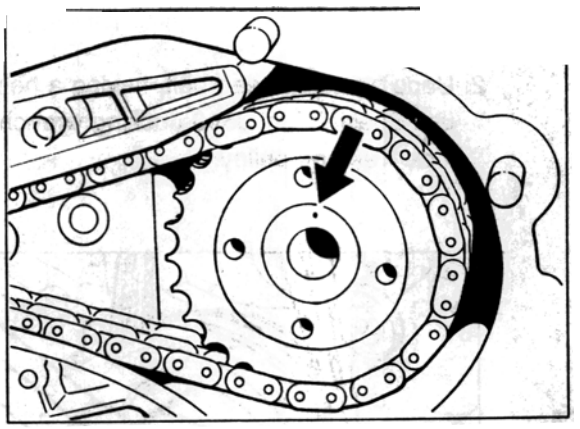

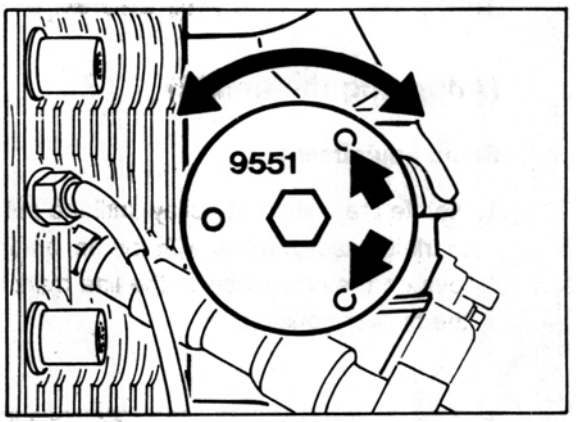

1465-15

6. Locking tools 9551 or 9552, respectively, may be used to align or rotate the camshafts from the front (flywheel side).

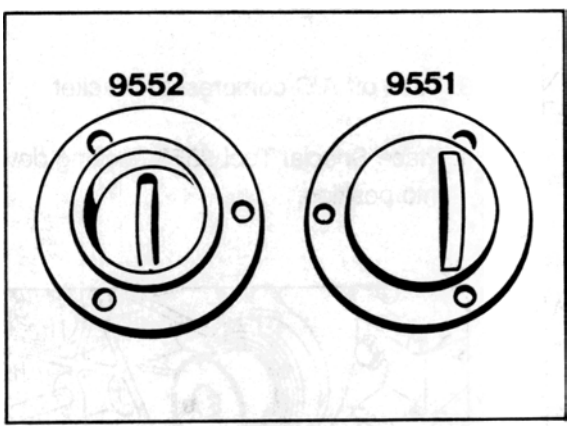

1480-15

7. When mark Z 1 on the pulley is aligned with the separating joint and when the punch marks and/or woodruff key groove of the camshafts point up, the engine will be set to firing TDC of cylinder 1 and overlap TDC of cylinder 4 as a basic adjustment.

8. Fit auxiliary chain tensioner (Special Tool 9401).

Fig. shows auxiliary chain tensioner for left side

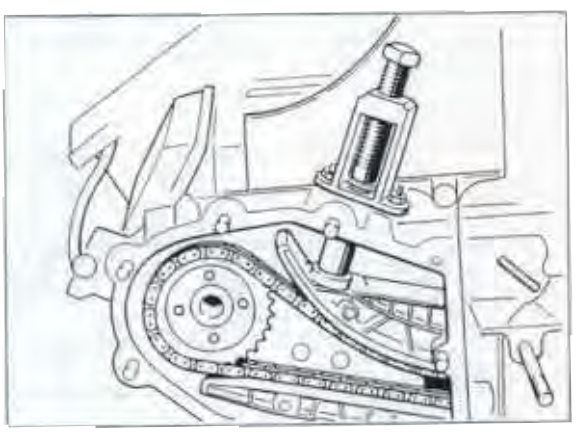

2172-15

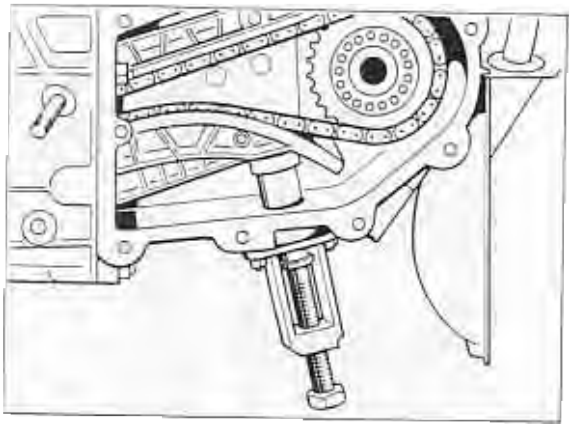

88-550

Note

When adjusting or checking the timing, the mechanical auxiliary chain tensioners must be fitted with the specified preload. The groove machined on the thrust piece must be barely visible.

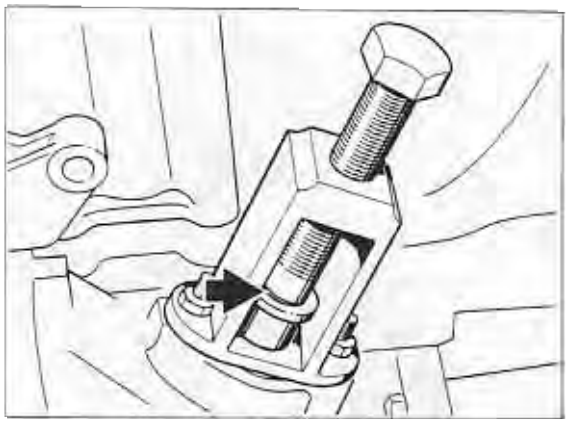

87-378

Precision adjustment

1. Place locking tool 9551 on left camshaft and locking tool 9552 on right camshaft and tighten them. Fit the fit bolts (2 ea.) to the three-hole flange (arrows).

Note

Due to tolerances of the hole pattern of the camshaft housing, the adjustment procedure may differ in some cases:

If the special tools cannot be fitted with 2 fit bolts each, use one fit bolt and one standard M6 bolt to locate them.

In extreme cases (large deviations of the mounting hole pattern on the camshaft housing), standard M6 bolts may be used to locate the special tools. (This will result in slight deviations of the camshaft timing).

Before installing Special Tools 9551 + 9552, check for any burr formation at the 6 H7 holes and at the fit bolts. The fit bolts must be able to rotate in the holes.

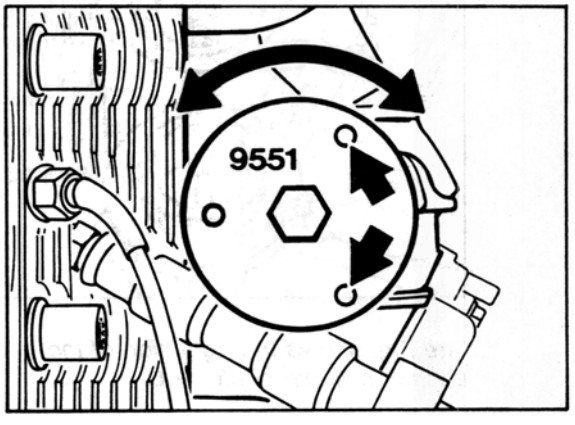

1465-15

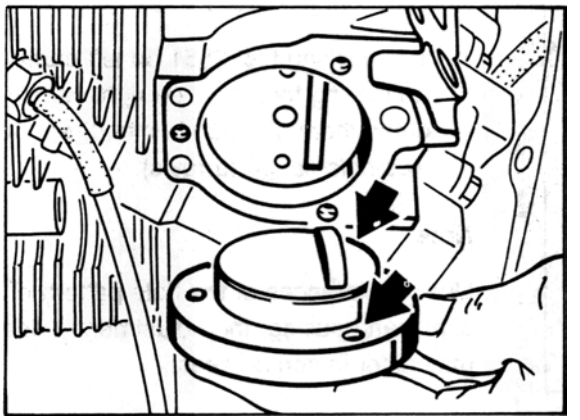

1461-15

The Fig. shows the left side of the engine Cylinder bank 1 - 3

Note

Adjusting and/or checking the timing with a dial gauge is no longer required. The locking tools are at the same time designed as timing adjustment gauges.

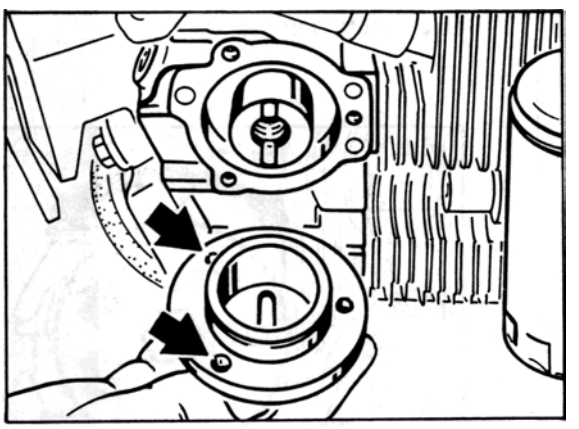

The Fig. shows the right side of the engine, cylinder bank 4 - 6 1460-15

2. Coat threads of hexagon head bolts with a thin coat of **Optimoly HT**.
   Tighten hexagon head bolts of left and right camshafts.

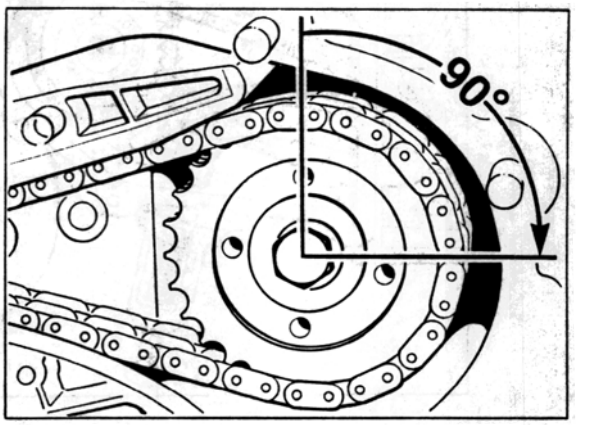

2136-15

1st stage: Setting torque 20 Nm (15 ftlb.)
2nd stage: Tightening angle 90°

To release the strain on the chain drive and the locking tools, lock with locking wrench (Special Tool **9582)** at the chain sprockets when tightening the bolts.

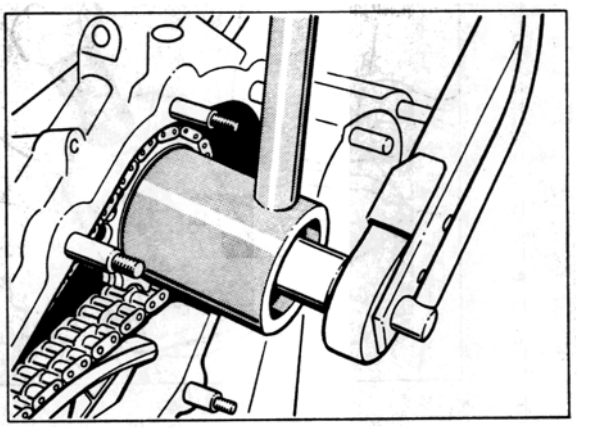

2137-15

After completing adjustment, take off auxiliary chain tensioner and refit original chain tensioner. Observe correct installation position.

15 30 37 Dismantling and assembling intermediate shaft

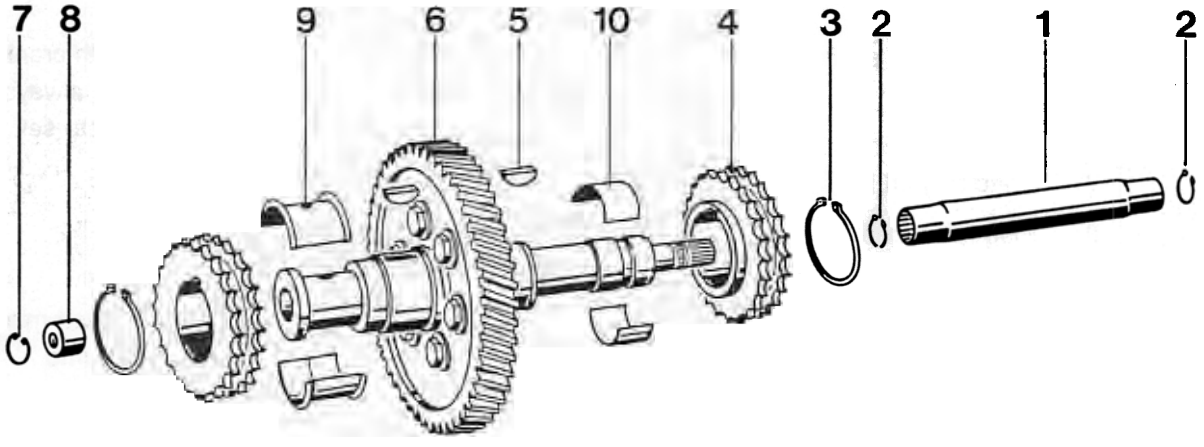

2001-15

No.	Designation	Qty.	Note: Removal	Installation
1	Union shaft	1		Check that shaft runout is within tolerances, shaft must move freely in longitudinal direction.
2	Snap ring 13 x 1	2		
3	Snap ring 36 x 1.75	2		Replace.
4	Chain sprocket		Press off, check teeth. Sprockets are available as spare parts.	Heat on heating plate, push into place to stop, observe installation position.
5	Woodruff key	2		
6	Intermediate shaft	1		Matched with crankshaft timing gear, always fit as a complete set.
7	Snap ring 16 x 1	1		
8	Plug, aluminum	1	Remove if bearing damage has occurred, clean bore.	
9	Thrust bearing	2		Sliding surface must be oiled, place into crankcase halves.
10	Bearing	2		Sliding surface must be oiled, place into crankcase halves.

15 20 01 Checking intermediate shaft

Checking

1. Visual inspection:
   Check intermediate shaft gear and timing gear for wear.

2. Check circumferential backlash:
   Fit crankshaft and intermediate shaft with new bearings in installation position. Fit VW 387 dial gauge bracket to crankcase mating surface. Take care not to damage sealing surface, use protective support if required.

3. Align dial gauge with one gear tooth and determine backlash.

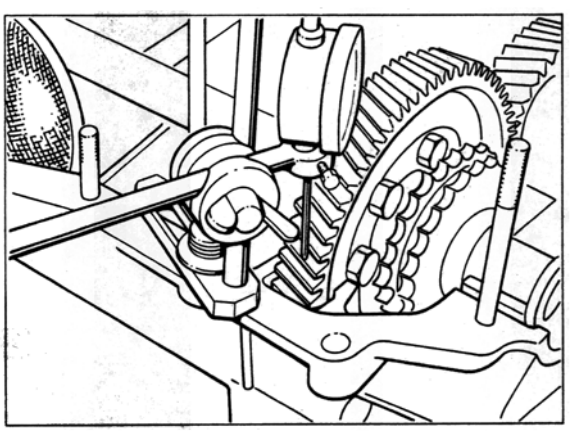

Circumferential backlash:

New dimension	0.035 - 0.084 mm
Wear limit	0.10 mm

Rotate intermediate shaft by 180° and repeat measurement.

15 38 19 Removing and installing camshaft housing seal

Tool

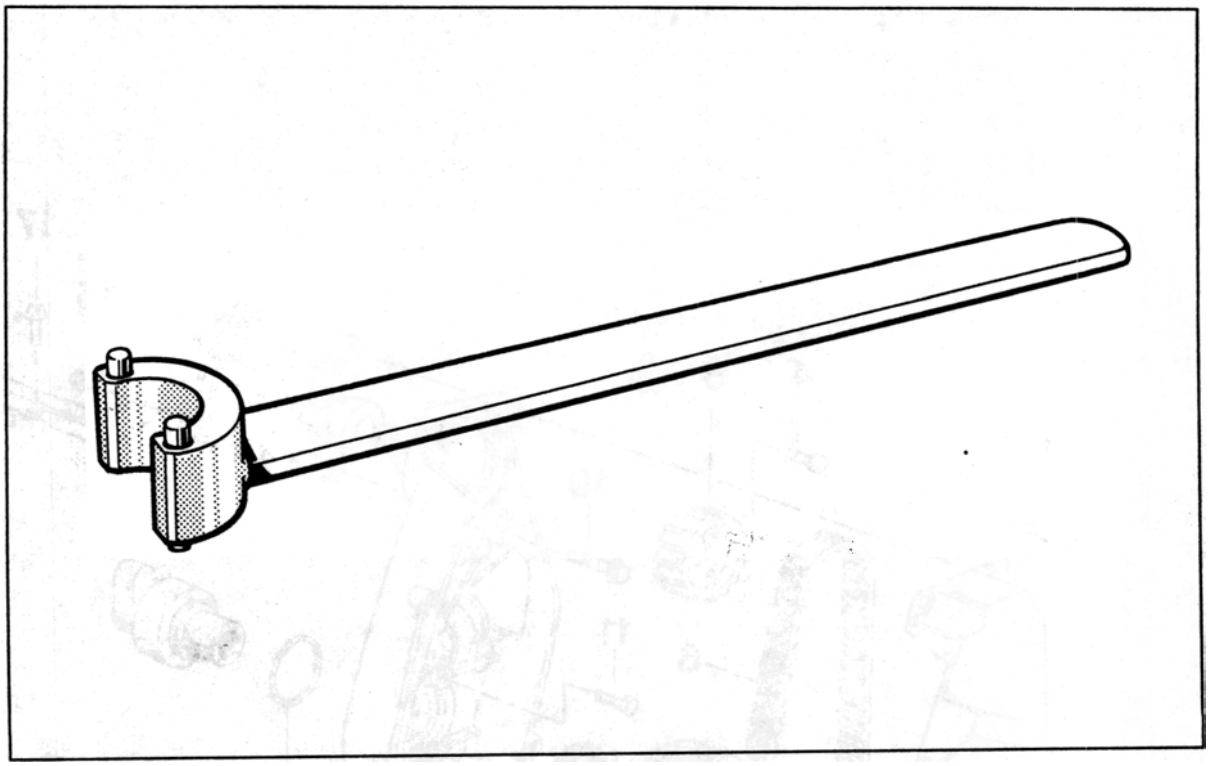

No.	Designation	Special Tool	Order No.	Explanation
1	Support assembly	9236	000.721.923.60	

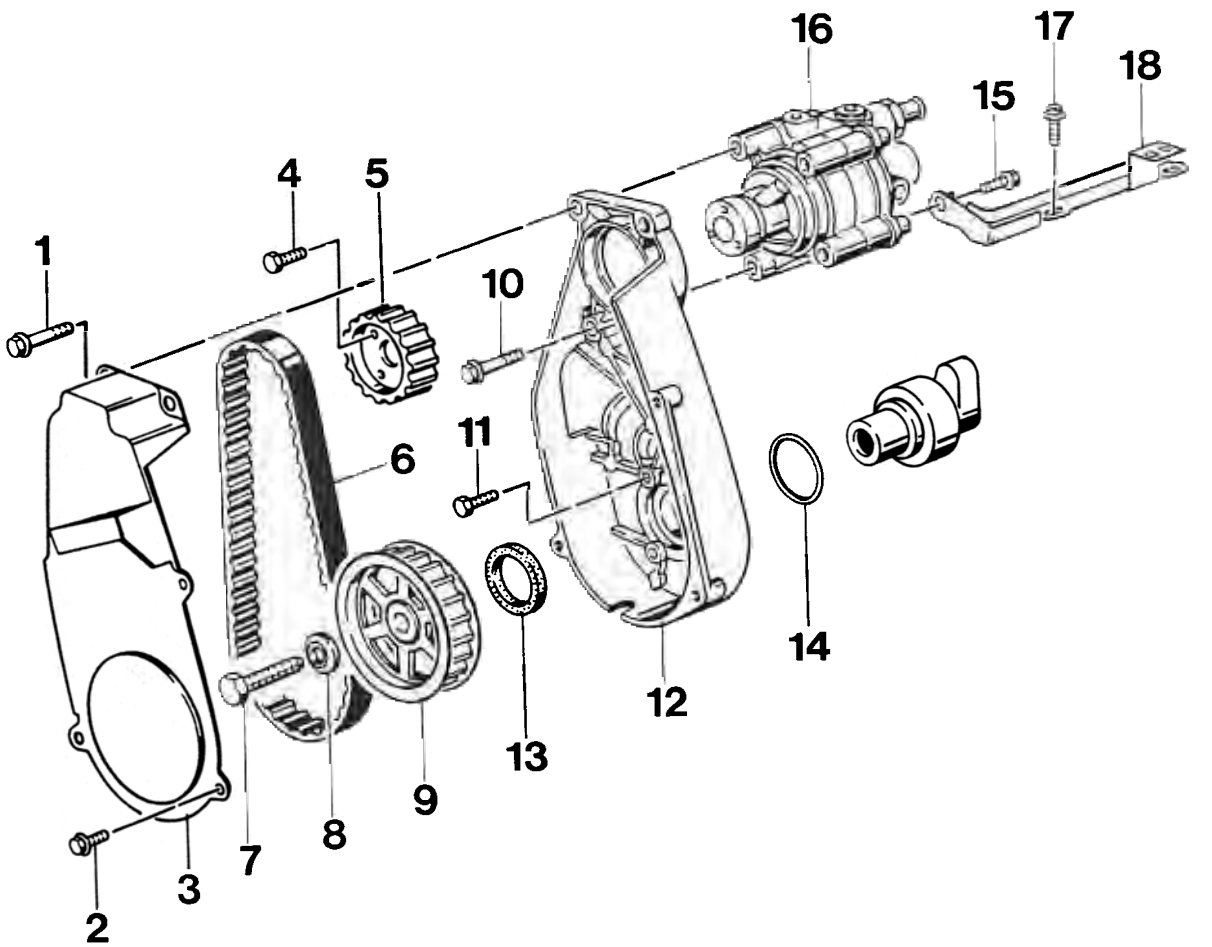

2007-15

No.	Designation	Qty.	Note: Removal	Note: Installation
1	Combination screw M 8 x 30	2		
2	Combination screw M 6 x 16	3		
3	Cover	1		
4	Pan-head screw M 6 x 16, self-locking	3		Apply locking compound if required.
5	Gear	1		Install with toothed belt fitted in place.
6	Toothed belt	1	Mark installation position	Check, inspect visually for damage.
7	Hexagon-head bolt M 12 x 1.5 x 50	1		Tightening torque 120 Nm, use Special Tool 9236 to lock.
8	Washer A 13	1		
9	Gear	1		Install with toothed belt fitted in place.
10	Combination screw M 8 x 35	2		
11	Hexagon-head bolt M 6 x 28	3		
12	Support housing	1		
13	Shaft seal A 30 x 42 x 7	1		Drive in to stop, apply oil to sealing lip.
14	O-ring 40 x 4	1		Replace, oil lightly.
15	Combination screw M 8 x 16	1		
16	Power pump	1		
17	Combination screw M 6 x 18	2		
18	Mounting bracket	1		

Combination screw = Hexagon-head bolt with captive washer

17 26 38 Removing and installing pressure regulating valves (Pressure relief valves)

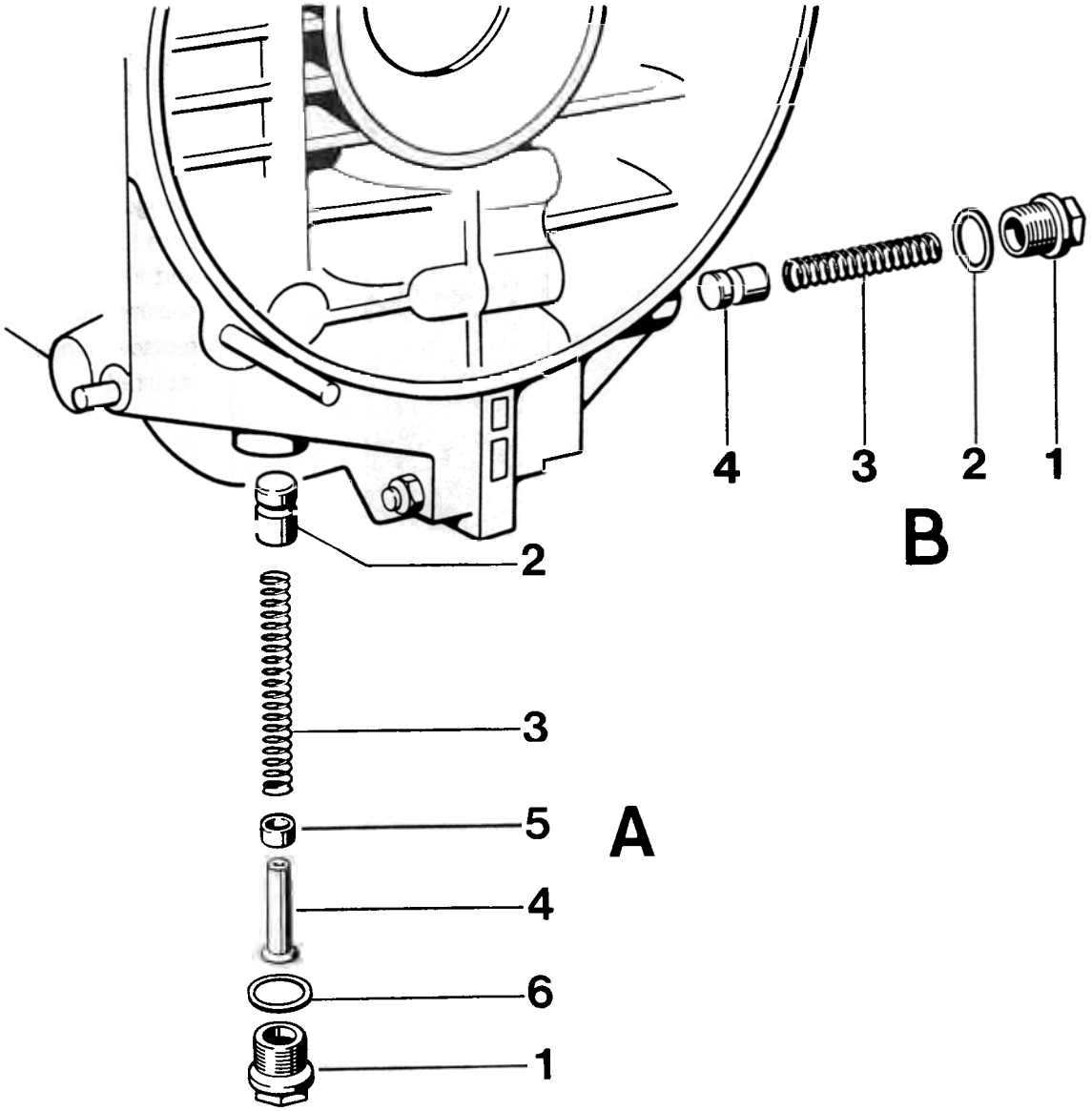

432-17

Printed in Germany - IX. 1994

No.	Designation	Qty.	Removal Note:	Installation
	Pressure relief valve A (Crankcase half, right-hand side)			
	Plug M 18 x 1.5	1		Tightening torque 60 Nm (44 ftlb.)
2	Plunger	1		Use wooden stick to pull out, if required. Check plunger and housing bore for signs of seizure. Remove seizure marks carefully, replace plunger if required
3	Thrust spring, 89 mm long	1		
4	Guide sleeve	1		
5	Spacer ring	1		Push onto guide sleeve
6	Seal A 18 x 24	1		Replace
	Safety valve B (Crankcase, left-hand side)			
	Plug M 18 x 1.5	1		Tightening torque 60 Nm (44 ftlb.)
2	Seal A 18 x 24	1		Replace
3	Thrust spring 70 mm long			
4	Plunger	1		Use wooden stick to pull out if required. Check plunger and housing bore for signs of seizure. Remove seizure marks carefully, replace plunger if required

17 10 30 Cleaning crankcase (oil passages)

The oil passages in the crankcase are plugged (i.e. closed) with sheetmetal covers during production.

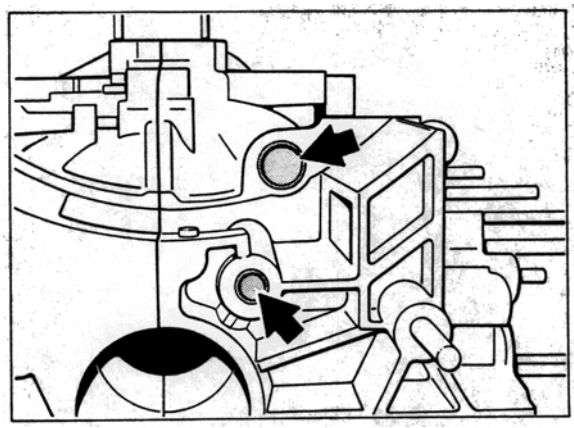

1872 - 17

If the sheetmetal covers have been removed e.g. to clean the oil passages after bearing damage has occurred, the sheetmetal covers have to be replaced with service aluminum plugs.

Sheetmetal covers have not been released as spare parts!

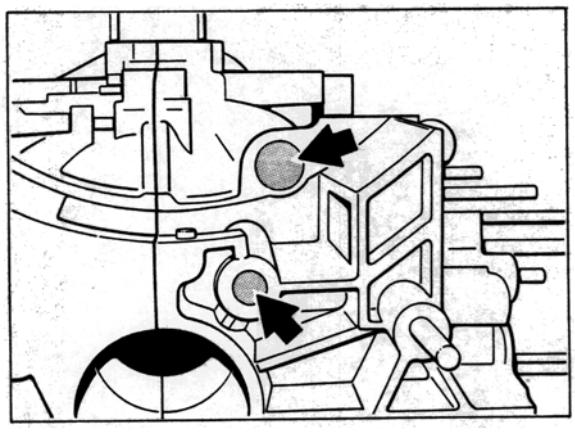

1873 - 17

Replacement aluminium plugs

The following oversize plugs are available for repairs:

Plug (A):

Ø 23 mm, part no. 911 101 185 01 (2 plugs)

Plug (B)

Ø 14 mm, part no. 911 101 182 01

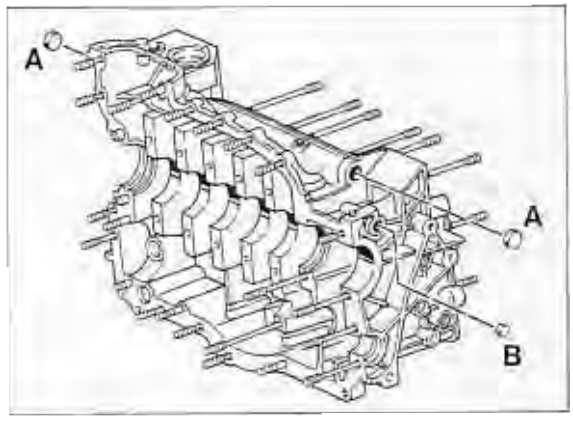

2250-17

Removal

Drill out plug (using a 6.5 mm bit) and tap M8 thread. Pull out plug using a "home-made" extractor consisting of an M8 bolt, spacer ring and washer. Push out the opposite plug, for example using a 10 mm dia. pipe.

Installation

Apply Optimoly HT (copper paste) to plug and press plug in flush.

17 03 01 Checking oil pressure

1. Screw standard oil pressure tester or VW 1342 tester combined with M 10 x 1 fitting and M 14 x 1.5 flange into hole of temperature sender unit in base.

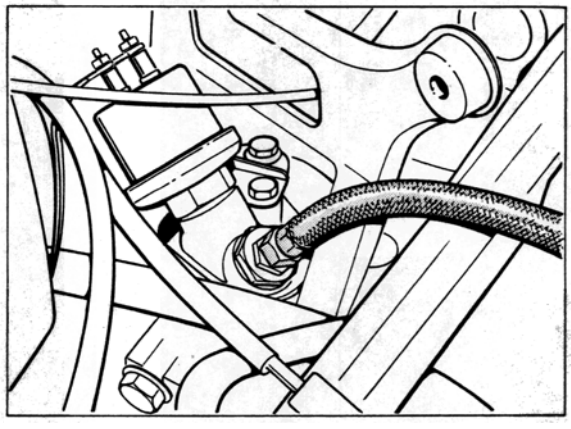

1874 - 17

2. Warm up engine to operating temperature (80 °C to 90 °C oil temperature). Use oil temperature tester (Special Tool 9122 + 9122/2) to check temperature.

3. The oil pressure at idle speed must remain between 2.0 and 2.5 bar. Have a second person raise the engine speed to 2,500 rpm. Read off oil pressure on tester. The reading must be above 5 bar.

4. Fit temperature sender unit with new seal.

15 70 37 Dismantling and assembling cylinder head

Tools

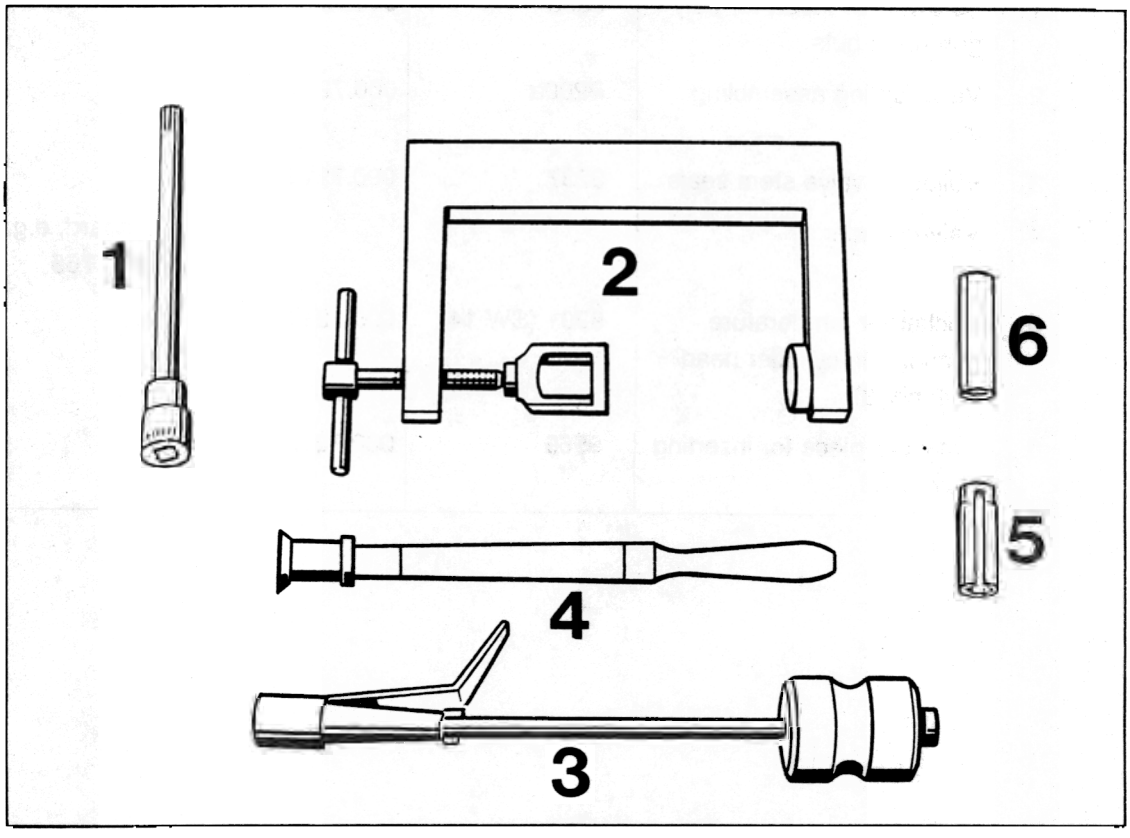

Tools

No.	Designation	Special tool	Order number	Explanation
1	Screwdriver insert for polygon head nuts	9295	000.721.929.50	
2	Valve spring assembling tool	P200a	000.721.200.10	
3	Puller for valve stem seals	3237	000.721.923.70	
4	Valve grinder			Standard, e.g. Hazet 765
5	Socket for temperature sensor II in cylinder head (cyl. no. 3)	9291 (SW 14)	000.721.929.10	
6	Pressure piece for inserting valve seal	9569	000.721.956.90	

70 17 D ntl ıg an assembl ng cy inder head

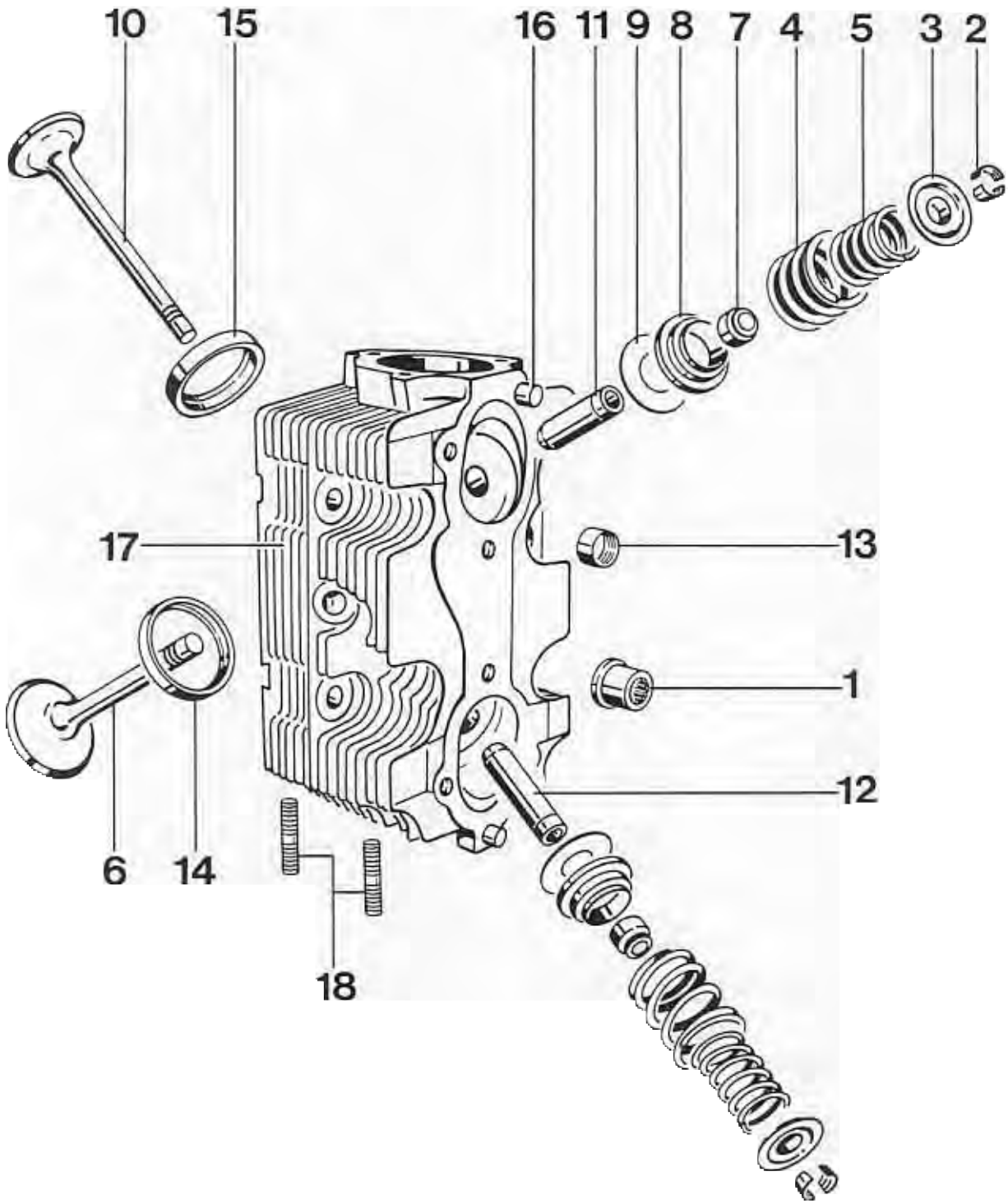

No.	Designation	Qty.	Note: Removal	Installation
1	Cylinder head nut	4	Use screwdriver insert for 9295 polygon-head nut	Apply a thin coat of Optimoly HT to cylinder head nut bearing surface
2	Valve collet	4		
3	Valve spring retainer	2		
4	Valve spring, outer	2		
5	Valve spring, inner	2		
6	Inlet valve	1		
7	Valve stem seal	2	Pull off	Replace, use assembly sleeve
8	Valve spring ring	2		
9	Washer	X		
10	Exhaust valve	1		
11	Valve guide, inlet	1		
12	Valve guide, outlet	1		
13	Thread insert	2		
14	Valve seat insert, inlet	1		
15	Valve seat insert, exhaust	1		
16	Roll pin	2		Pressed in to stop
17	Cylinder head	1		
18	Studs M 8 x 22	2		Fitted with Loctite 270, protruding length 23 - 0.5 mm. Screw studs with unmarked end into cylinder head (exhaust side)

Tightening the cylinder heads

Tightening method based on rotating angle

Tools

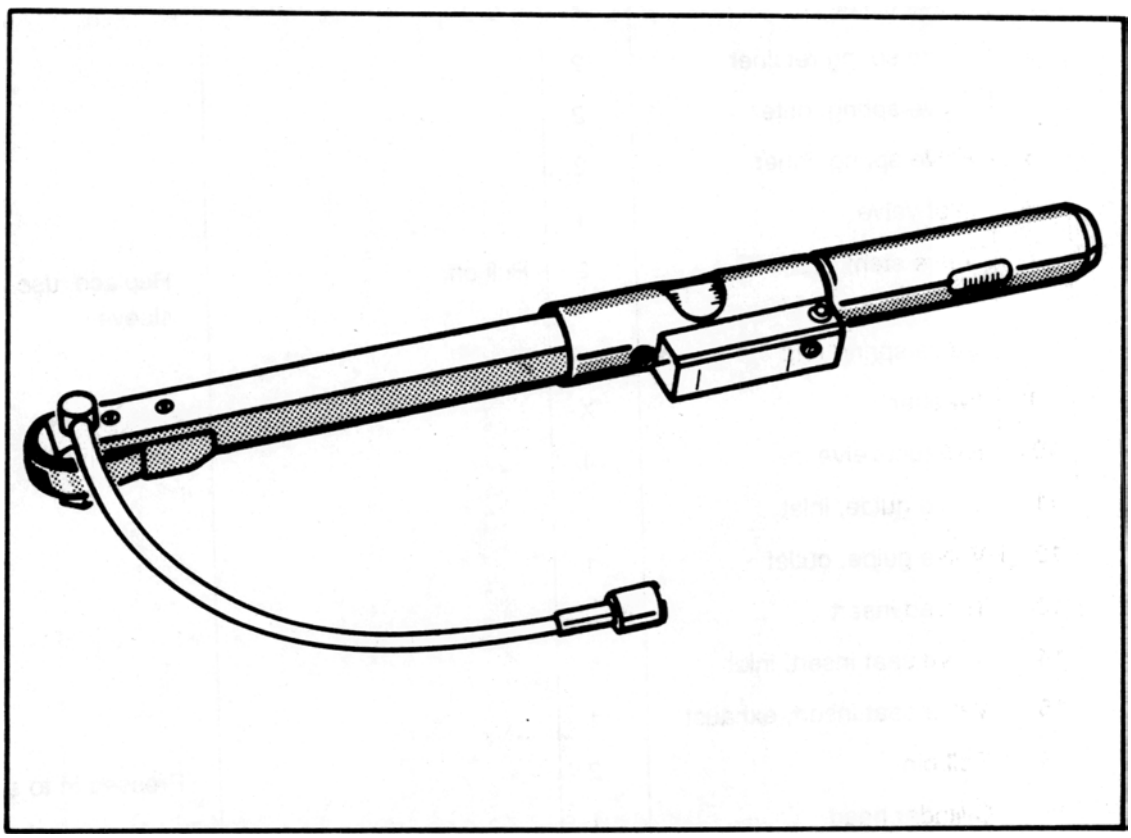

No.	Designation	Special tool	Order number	Explanation
	Gradoscope			Standard, e.g. Stahlwille No. 15/20

Tightening the cylinder heads

Tighten cylinder heads with tightening method based on rotating angle.

Assembly notes

1. Apply a thin coat of **Optimoly HT** (copper paste) to the stud threads.

2. Fit cylinder heads.

3. Apply a thin coat of **Optimoly HT** to the cylinder head nuts and tighten them as follows:

Tightening in two steps:

1st step: **20 Nm** (18 ftlb.) according to specified tightening sequence

2nd step: **1 x 90° ± 2°** in identical sequence

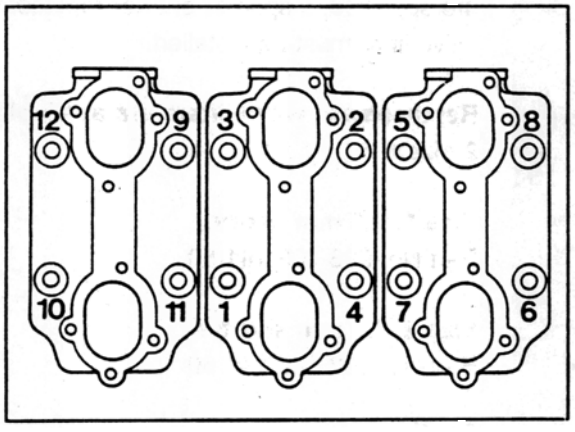

327-13

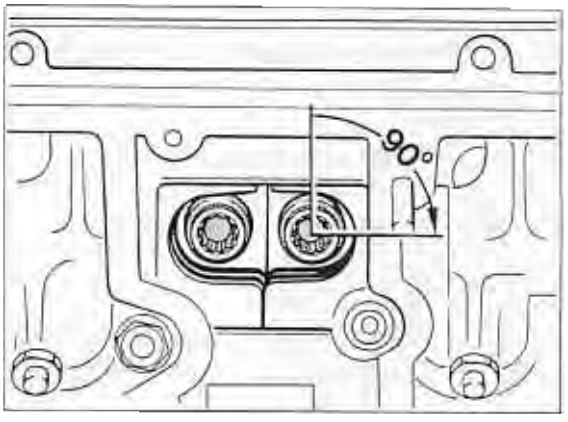

435-15

4. Tighten knock sensor bridges to a final torque of 9.7 Nm (7 ftlb).

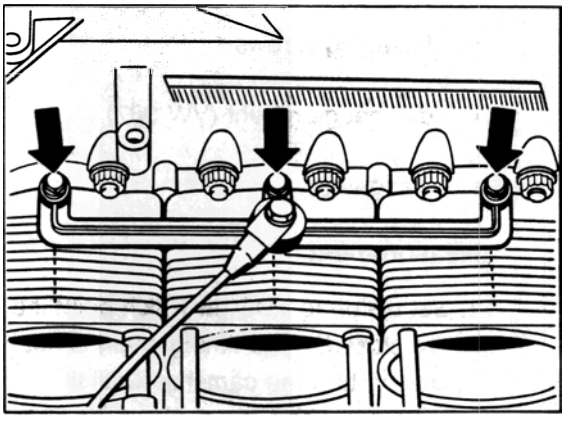

436-15

Note

The hexagon head bolts of the knock sensor bridge should only be screwed in manually before tightening the cylinder heads.

15 59 04 Measuring valve lifters

Each time valve seats or valves are machined, the lift of the valve lifters must always be measured.

The following parts are needed for the test assembly:

1 intake rocker arm

1 exhaust rocker arm

2 valve lifters
(the valve lifters must be free from oil; clean them in petroleum spirit)

Note: These parts should only be used for checking valves and lifters and must therefore be appropriately marked and stored separately.

original rocker arm shafts

fastening screws

dial gauge mount (VW 387)

dial gauge

Measurement

Set piston to TDC, at which point the valves are closed. If the timing chain is not installed, turn the camshaft until the rocker arms are within the circle of the cam.

2. Push rocker arm by hand and read valve lift of dial gauge.

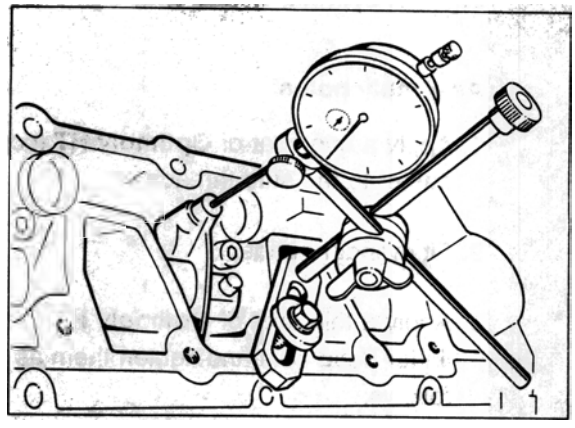

1908-15

The lift must be at least **0.2 mm on the intake rocker arm and 0.6 mm on the exhaust rocker arm.**

If the valve lift measured is lower than the figure specified, a special, shorter replacement valve lifter must be installed.

Replacement valve lifters are available in 2 sizes:

Size 1: 0.5 mm shorter
Part No. 993 105 141 50

Size 2. 1.0 mm shorter
Part No. 993 105 141 60

Caution:

The lift must not exceed
1.85 mm on the intake rocker arm
or
2.25 mm on the exhaust rocker arm!

15 75 02 Checking valve guides

1. Clean valve guides thoroughly

2. Use a new valve to measure the tilting play.

3. Fit dial gauge holder VW 387 to cylinder head. The dial gauge must be aligned parallel to the valve head.

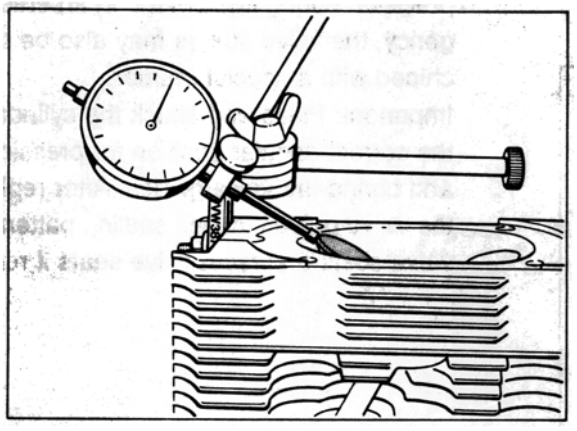

1763-15

4. The tilting play is measured at a valve lift of 10 mm (clearance from valve head to valve seat).
   Wear limit for
   inlet guide = **0.80 mm**
   exhaust guide = **0.80 mm**

Note

Any ovality in the entry section of the valve guides may be disregarded.

15 75 56 Replacing valve guides

Removal

Working from the camshaft side, machine off protruding valve guide sections using a spot facer until the valve guides are flush with the cylinder head. Loosen guide with a sharp hammer blow and press out remainder towards combustion chamber using a press.

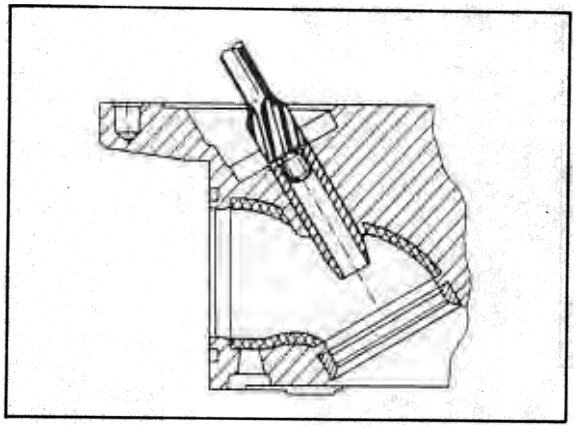

1761-15

Installation

The valve guide mounting bores in the cylinder head are widened slightly during removal of the old guides.
When fitting new guides, use oversize valve guides and adjust them accordingly (refer to measurement table).

1. Measure valve guide mounting bores.

2. Machine the outside diameter of the oversize valve guides on a lathe according to the bores in the cylinder head. Guideline for machining: 14.08 - 13.09.
   The press fit for the inlet and exhaust valve guides must be 0.06 to 0.08 mm.

3. Coat machined valve guides with tallow and fit into cylinder head with a shop-made drift, working form the camshaft side.

4. Bore inner valve guide dia. to a dimension of "g" = 8.00 to 8.015 mm using a broach or precision boring equipment. In an emergency, the valve guides may also be machined with a special reamer.
   Important: Place and chuck the cylinder in the correct angular positíon for pressing in and boring the valve guides. After replacing the valve guides, check sealing pattern of valve seats and recut valve seats if required.

Dimensions for fitting the valve guides

Valve guide	Outside Ød* of valve guide	Bore Ø D of cylinder head
Standard (production)	13.060	13.000 - 13.018
1st oversize	13.260	13.000 - 13.200

* Machine valve guide Ø d to the respective bore Ø D - observe correct press fit.

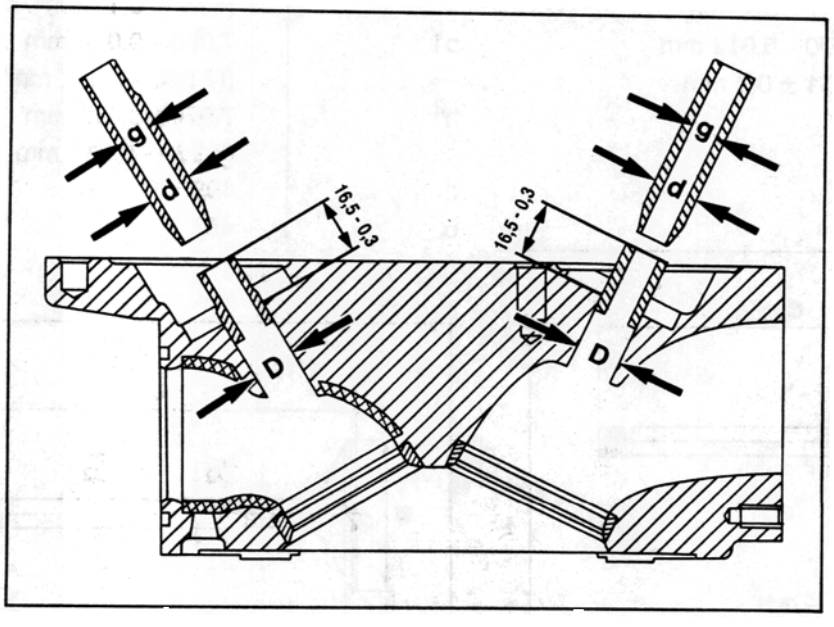

How to tell the valve guides apart

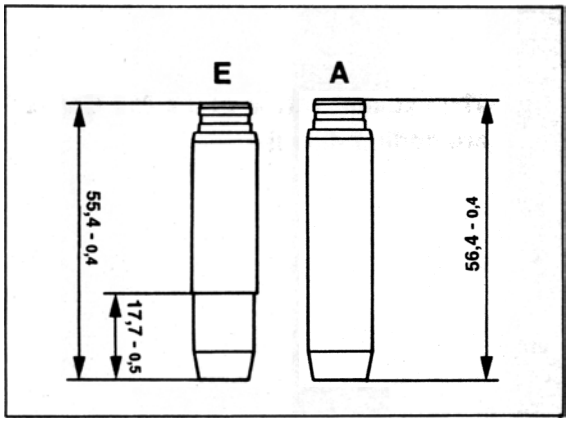

1745 - 15

15 62 04 Measuring the valves

Valve dimensions
911 Carrera RS (values in brackets)

Inlet valve

Dimension	Inlet valve (sodium-filled)
a	49 ± 0.1 mm (51,5 ± 0,1 mm)
b	7.970 - 0.012 mm
c	110.1 ± 0.1 mm
α	45°

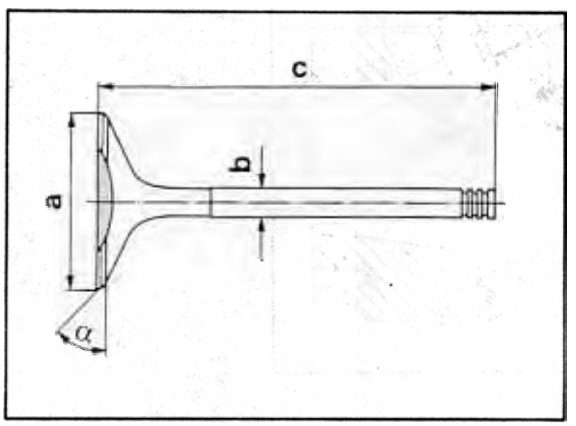

1770 - 15

The intake valves of the 911 Carrera (993) and the 911 Carrera RS are sodium-filled!

Exhaust valve

Dimension	Exhaust valve (b^1 - b^2 = tapered)
a	42.5 ± 0.1 mm (43.5 ± 0,1 mm)
b1	7.950 - 0.012 mm ((7.940 - 0.012 mm)
b^2	7.970 - 0.012 mm (7.960 - 0.012 mm
c	109 ± 0.1 mm
α	45°

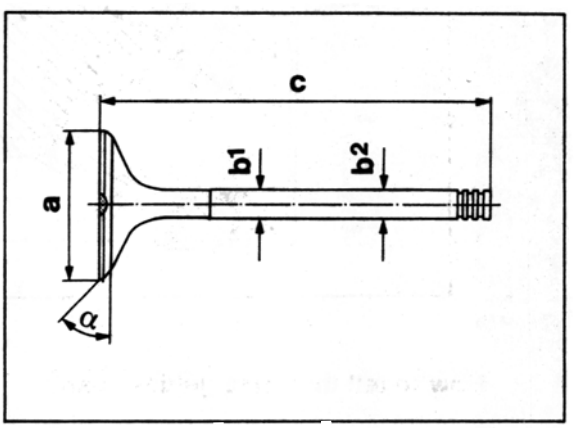

1771 - 15

The exhaust valves of the 911 Carrera RS are sodium-filled!

15 65 06 Checking and adjusting installed length of valve springs

Installed length, dimension "A"

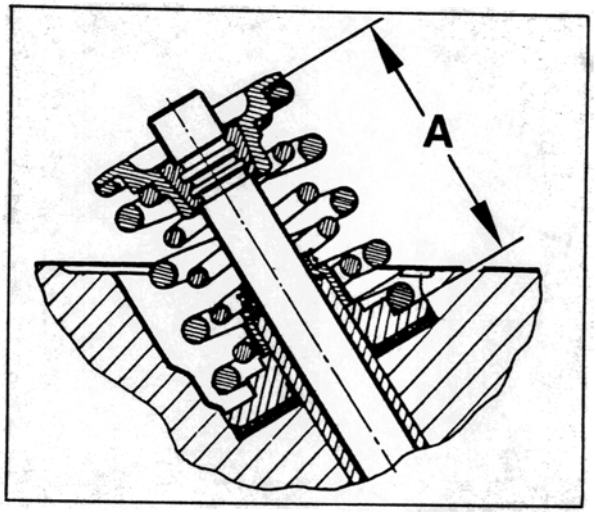

1. Assemble shims, valve spring support, valve, auxiliary spring, e.g. for oil thermostat (engine 928), part number 928.107.171.01, valve spring cap and valve keepers.

Note

If required, the spring may be shortened slightly to facilitate assembly.

2. Using a depth gauge, measure vertically from valve spring cap top surface to valve spring seat surface. Record measurement.

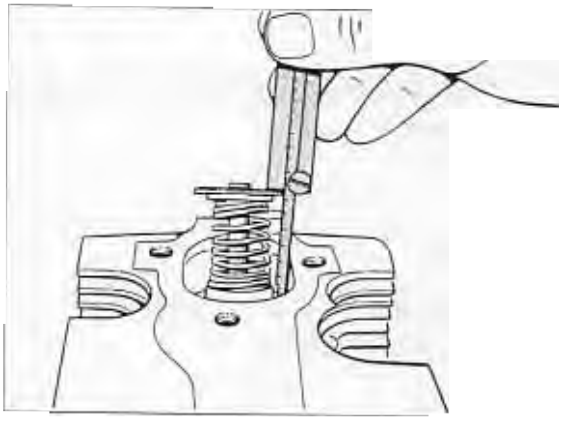

3. Determine thickness of valve spring cap. Record measurement.

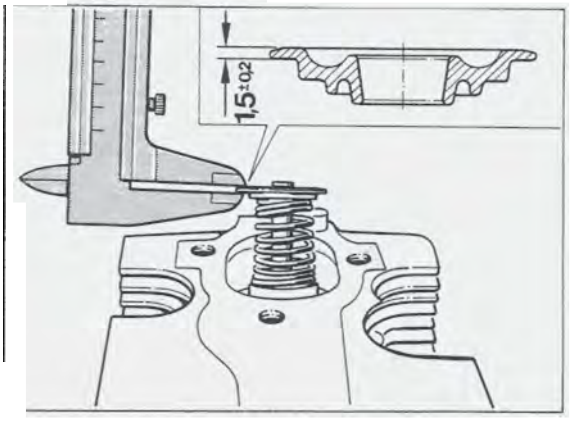

1733-15

4. Determine actual dimension

Example for determining the actual dimension:

Inlet valve spring

Measured value	38,5
Thickness of valve spring cap	- 1.6
	36.9

Result:
The value of **36.9** is within the admissible tolerance.

Note

Take care not to confuse the parts after the measurement.

Engine **M 64 / 05 / 06 / 07 / 08**		**Engine** **M 64 / 20 (RS)**
Installation dimension specifications		
Inlet valve **A**	= 36.7 + 0.3 mm	37,2 + 0,3 mm
Exhaust valve **A**	= 35.7 + 0.3 mm	35,8 + 0,3 mm

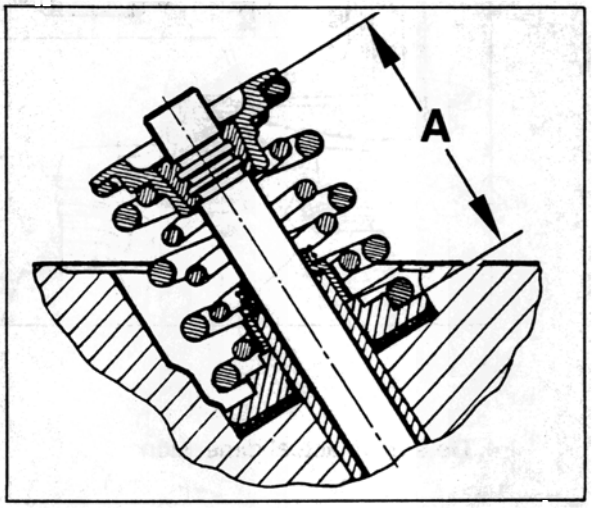

15 63 19 Removing and installing valve seal

Removal

Hook special tool 9237 into recess in valve seal and pull valve seal out.

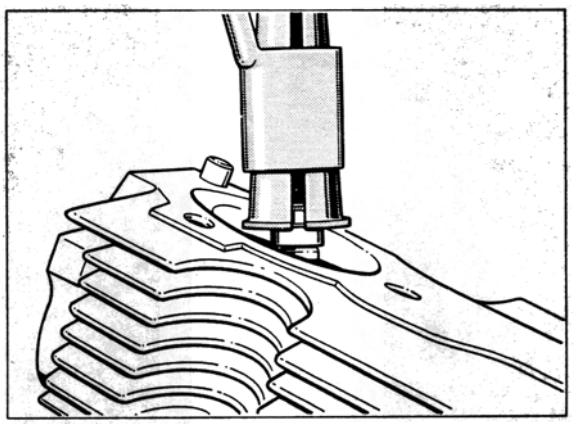

2204-15

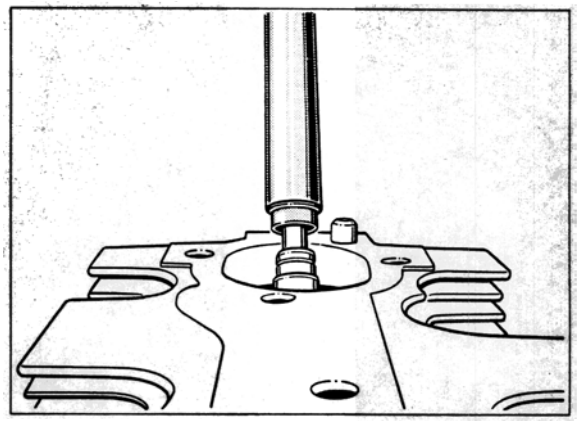

2205-15

Installation

Install the washers and valve spring seats which have been determined. Push plastic mounting sleeve (8 mm dia.) onto valve stem. Oil seal lip and seat surface of valve seal, position it by hand and knock it carefully onto the valve guide using special tool 9569 (pressure piece). Remove plastic sleeve.

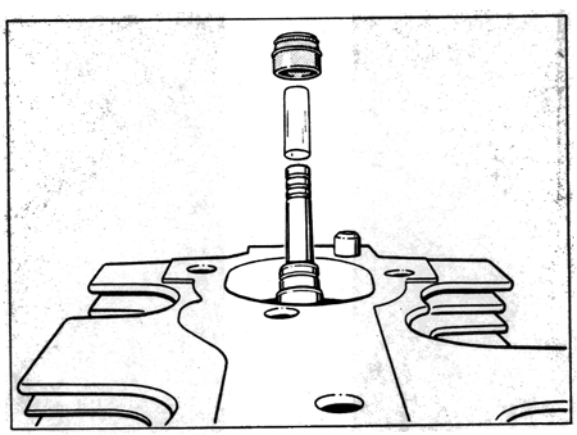

2203-15

15 03 37 Dismantling and assembling camshaft housings

Left-hand camshaft housing

Note: Unless indicated otherwise, coat all aluminum plugs with Optimoly HT (copper paste) and press in flush. Do not use any other lubricant.

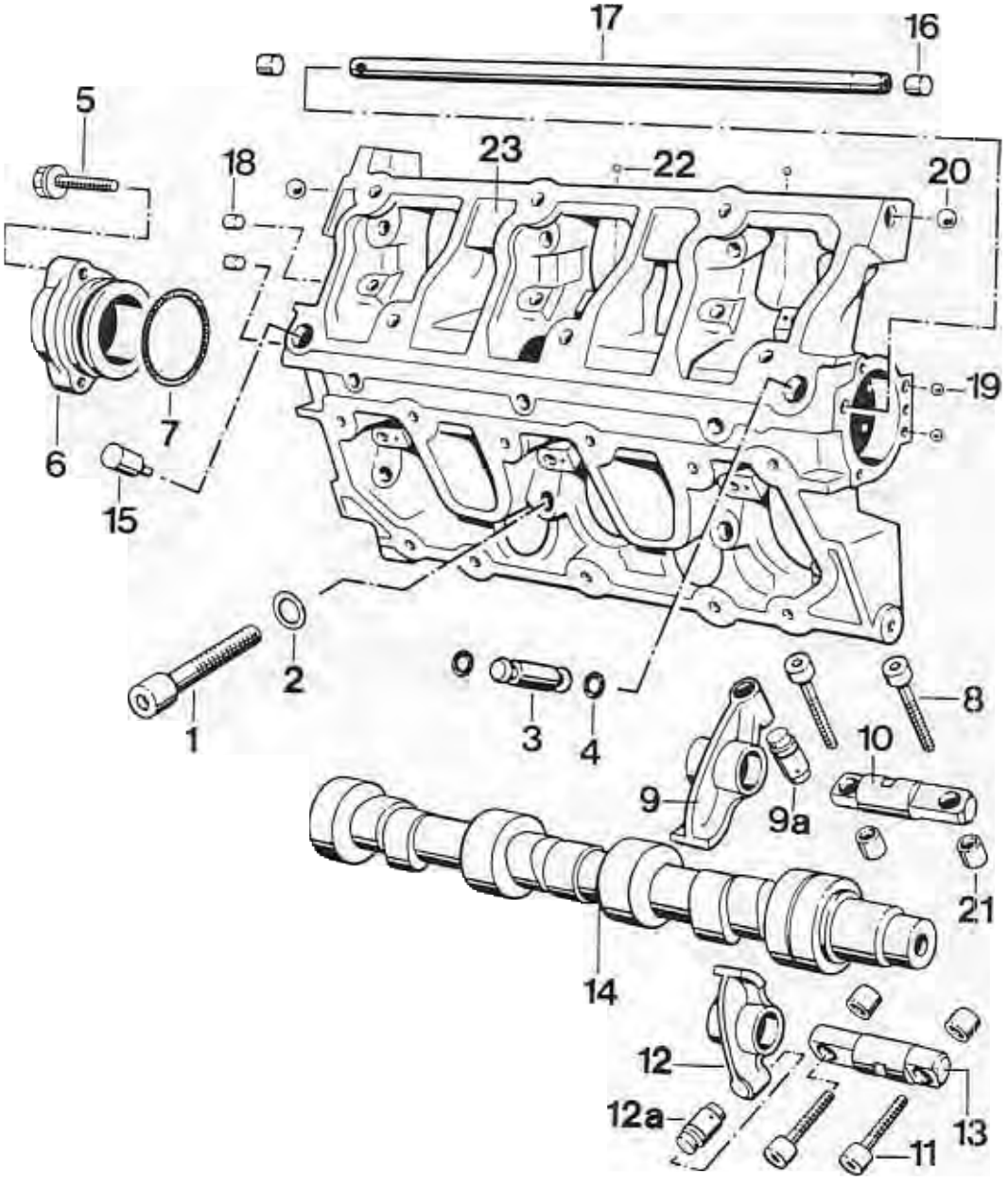

No.	Designation	Qty.	Note: Removal	Installation
1	Cylinder bolt (outer) M 8 x 55 Cylinder bolt (inner) M 8 x 30	12 6		Replace, coat threads with Loctite 574 if required, tightening torque 23 Nm (17 ftlb.)
2	Washer, attached permanently to cylinder bolt (for item No. 1)			
3	Flange	1		
4	O-ring	3		Replace, lightly oiled
5	Hexagon head bolt with permanent washer (M 6 x 28, self-locking)	3		
6	Cover	1		
7	O-ring 40 x 4	1		Replace, lightly oiled
8	Cylinder bolt	6		Tightening torque 13 Nm (10 ftlb.)
9	Rocker arm (inlet)	3		Identification: Cap for valve lifter bore is punch-marked along its circumference
9a	Valve lifter	3	Pull out with suitable pliers but do not reuse	
10	Rocker arm shafts	3		Bearing surface oiled
11	Cylinder bolt	6		
12	Rocker arm (exhaust)	3		Bearing surface oiled
12a	Valve lifter	3	Pull out with suitable pliers but do not reuse	
13	Rocker arm shafts	3		Oil sliding surface, use hold-down tool to push against mating surfaces on both sides, then tighten cylinder bolts to 13 Nm

No.	Designation	Qty.	Note: Removal	Installation
14	Camshaft, left-hand (cylinder bank 1 - 3)	1		Identification 993.247.07 embossed on face flange. Punch mark points up. Use locking device 9551
15	Plug with positioning tip	1	Drill open, pull off	Press in flush. Apply only Optimoly HT (copper paste) when fitting
16	Plug	2	Drill open, pull off	
7	Spray tube	1		Check oil spray bores, flush thoroughly, install in correct position (spray bores must point towards camshaft); position spray tube
18	Plug Ø 6.7	2		Press in flush
19	Ball Ø 6.35	2		Press in flush
20	Ball Ø 9.525	2		Only found on engines with air injection, otherwise bore is omitted
21	Adapter sleeve 9 x 11	12	If required, use vise-grip pliers to pull out	Check for correct seating
22	Ball Ø 3.969	6		Check if ball is not missing

Assembly notes

Removing and installing spray tube on camshaft housing

Note

In case of bearing damage and when rebuilding the engine, the spray tubes must always be removed and cleaned thoroughly.
If bearings are damaged, the lateral oil ducts must also be cleaned (removed 6.7 mm dia. plug and opposite 6.3 mm dia. balls).
The ball may be pushed out with a threaded bar (M5) from the opposite side. **Balls that do not retain a press-fit should be replaced by a plug.**

Removing the spray tubes

Removal

1. Pre-drill lateral plugs (8.15 mm dia.) and upper plug (12.5 mm dia.) with a 4.8 to 5 mm dia. drill to a depth of approx. 9 mm and tap in an M 6 thread with a bottoming tap. Pull out plug with M 6 screw and spacer sleeve.

Positioning spray tube with auxiliary tool

Turn original plug (Part No. 993.105.345.00) down to an outside dia. of 12.4 mm. Tap M 5 thread into plug and screw in suitable screws, e.g. M 5 x 35. Push spray tube into camshaft housing. Smaller bores (6 bores) face camshaft. Use auxiliary tool to position spray tube. Coat new plug with Optimoly HT and press in flush.

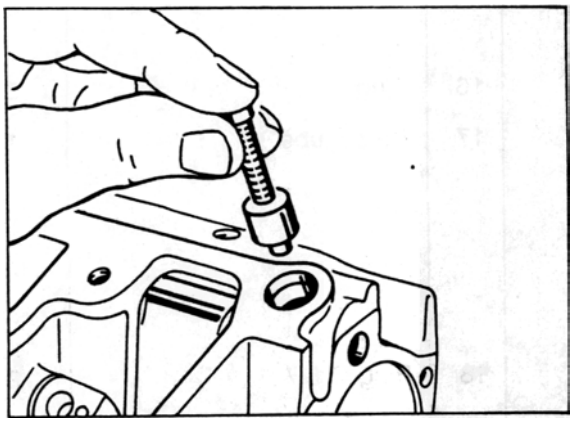

1592-15

Installation

Apply a coating of Optimoly HT to the new plug and press in flush.

Installation position of rocker arms

1 - Inlet rocker arm

Identification:
Valve lifter bore is drilled, plugged with cover and punched (arrow).

2 - Exhaust rocker arm

Valve lifter bore not drilled

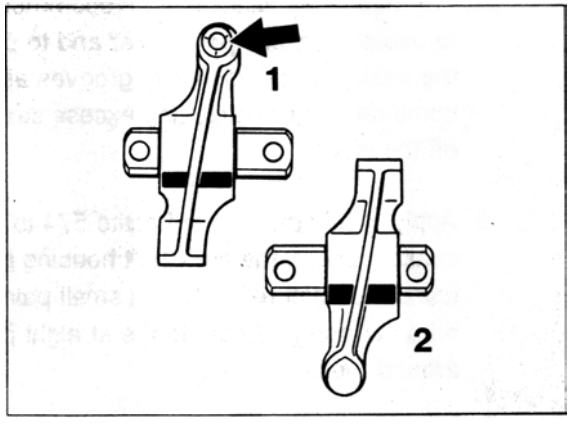

1483-15

Checking presence of sealing balls

Balls (6) on camshaft housing sealing face, balls (2) on front face (pulley side). 2 lateral balls are only present on engine with air injection.

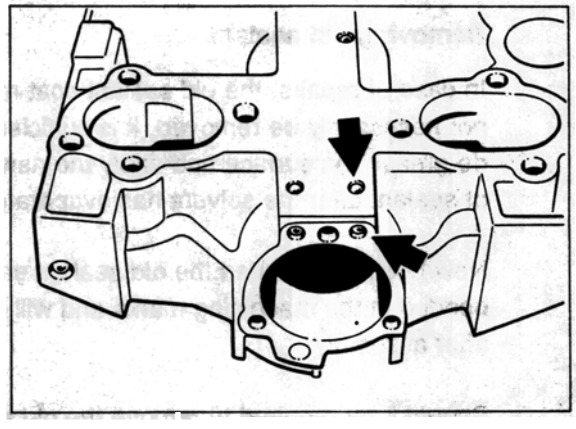

1629-15

Sealing the camshaft housing sealing face

Use only Loctite 574 to seal.

Loctite 574 hardens only when contact with metal is made and air ingress is prevented. After having applied the sealant, bolt up the crankcase sections within approx. 10 minutes since the sealant bead applied directly to the metal surface will otherwise start to cure.

Removing old sealant

In case of repairs, the old sealant coat must not necessarily be removed. It is sufficient to de-grease the surface and apply the new coat of sealant after the solvent has evaporated.

New Loctite will soften the old sealant embedded in the machining marks and will cure after assembly.

Should it be required to remove the old sealant, it isrecommended to use a fine-mesh wire brush or Loctite adhesive remover 80646.

Applying sealant

1. For manual application, it is recommended to use a short-pile paint roller and to pour the sealant into a dish with grooves at its circumference (for squeezing excess sealant off the roller).

2. Apply a uniform coat of Loctite 574 to the sealing face of the camshaft housing by using the paint roller. Use a small paint brush to apply sealant to the straight pins around the bolt holes.

15 31 37 Dismantling and assembling chain housing with camshaft drive

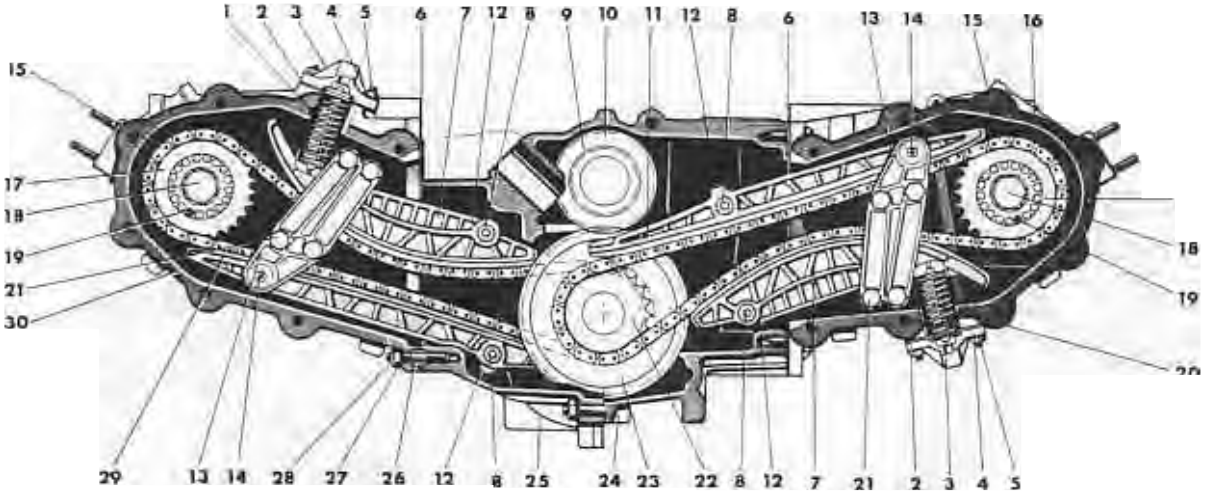

649

1 - Left-hand chain tensioner
2 - Chain tensioner gasket
3 - Chain tensioner cover
4 - Aluminum washer
5 - M 6 lock nut
6 - Chain housing gasket
7 - Tensioning rail
8 - Support stud
9 - Distributor drive gear
10 - Crankshaft sprocket z = 35
11 - Right-hand guide rail
12 - Spring-loaded thrust piece
13 - Bearing saddle
14 - Heavy type dowel pin
15 - Duplex roller chain
16 - Right-hand chain housing
17 - Chain sprocket z = 28
18 - Hexagon head bolt M 12 x 1.5
19 - Straight pin, 6 mm dia.
20 - Right-hand chain tensioner
21 - M 6 hexagon-head bolt
22 - Chain sprocket z = 24
23 - Intermediate shaft sprocket z = 60
24 - Right-hand crankcase section
25 - Left-hand crankcase section
26 - Fit sleeve
27 - Aluminum washer
28 - M 8 lock nut
29 - Left-hand guide rail
30 - Left-hand chain housing

15 31 37 Dismantling and assembling chain housing with camshaft drive

Cylinder bank 4 - 6

Set engine to firing TDC of cylinder no. 1 (overlap TDC of cylinder no. 4) before dismantling the housing. The punch marks on both camshafts now face up.

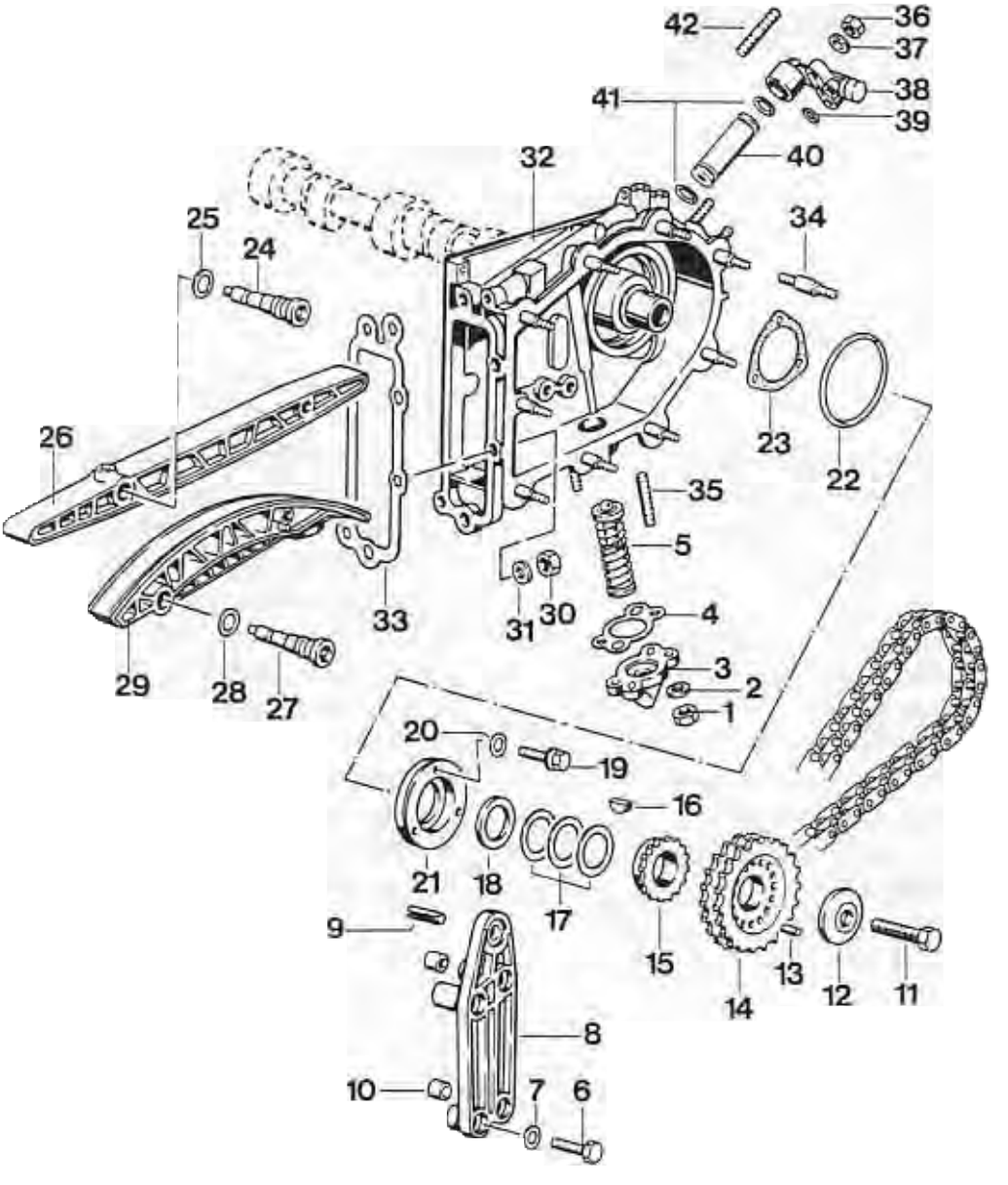

No.	Designation	Qty.	Note: Removal	Installation
1	Lock nut	2		
2	Washer 6.4 x 14 x 3	2		
3	Cover	1		
4	Gasket	1		Replace
5	Chain tensioner	1		Oil supply bore points down. In addition, the spring retainers are marked with **„oben" (top)** and **„unten rechts" (bottom right)**.
6	Hexagon head screw M 6 x 18	4		
7	Washer 6.4	4		
8	Support bracket	1	When levering off, take care not to damage the guiding edges of the guide rail	
9	Roll pin 10.5 x 43	1	Use vise-grip pliers to pull out of chain housing	Observe correct seating in chain housing
10	Adapter sleeve 8 x 8	2		Check for correct seating in support bracket
11	Hexagon head bolt M 12 x 1.5 x 50	1	Lock with suitable locking device	Apply a thin coat of **Optimoly HT**. Tightening torque **120 Nm** (88 ftlb.), lock with locking device
12	Washer	1		
13	Straight pin	1	Use puller **P 212** to pull out	
14	Sprocket	1	Take off chain	Check teeth for wear, deeper cutout in sprocket must face forward (towards flywheel)
15	Sprocket flange	1		

No.	Designation	Qty.	Note: Removal	Installation
16	Woodruff key	1	Use diagonal cutting pliers to lift out	
17	Shim	X		Measure size. Determine parallelity of sprockets. In most cases 4 shims are required
18	Thrust washer	1		Install in correct position, cutout must face camshaft
19	Hexagon head bolt or screw and washer assembly	3		
20	Washer A 6.4 (refer to item 19)	3		
21	End cover	1		
22	O-ring	1		Replace. Check seating area in chain housing and deburr edge if required. Must be greased lightly along outside circumference. Do not twist when fitting
23	Gasket	1		Replace, apply a thin coat of **Loctite 574** to both sides
24	Retaining stud	1		Tightening torque **31 Nm** (23 ftlb.)
25	Seal A 16 x 20	1		Replace
26	Guide rail	1		Guide rail must engage audibly into groove in retaining stud
27	Retaining stud	1		Tightening torque **31 Nm** (23 ftlb.)
28	Seal A 16 x 20	1		Replace

No.	Designation	Qty.	Note: Removal	Installation
29	Tensioning rail	1		Tensioning rail must engage audibly into groove in retaining stud
30	Lock nut	5		
31	Washer 8.4 x 18 x 3	5		
32	Chain housing (right-hand side)	1		Check O-ring seating area (No. 22) and deburr if required
33	Gasket	1		Must always be replaced. **Coat both sides with Loctite 574**
34	Collar pin	9		Tightening torque **7 Nm** (5 ftlb.), glued into place with **Loctite 270**
35	Stud 6 x 18	2		Bonded in with **Loctite 270**
36	Lock nut	2		Replace if required
37	Washer 6.4 x 14 x 3	2		
38	Flange (bridge)	1		
39	Seal 6 x 25	1		Replace
40	Sleeve	1		
41	Seal 6.7 x 3.53	2		Replace
42	Stud M 6 x 20	1		Bonded in with **Loctite 270**

15 31 37 Drive with single-part chain sprocket – flange unit (4-hole chain sprocket)

Note

Description from page 15 - 20a onwards

In combination with the use of 4-hole chain sprockets, the following parts are no longer installed on the camshaft drive.

thrust washer
compensation washers (measurements to ensure that the parts are parallel are therefore no longer required)
Woodruff key
chain sprocket flange
straight pin

The holes drilled in the chain sprocket are intended for inserting special tool 9582 (retaining tool). This tool must be used in addition to blocking tools in order to relieve the strain on the camshaft drive when tightening.

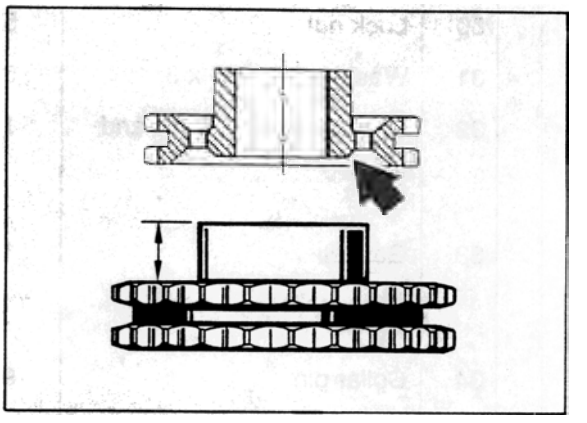

2153-15

Right chain sprocket / cylinders 4 - 6
part no. 993 105 546 02
Distinctive feature: high collar (arrow)
low flange

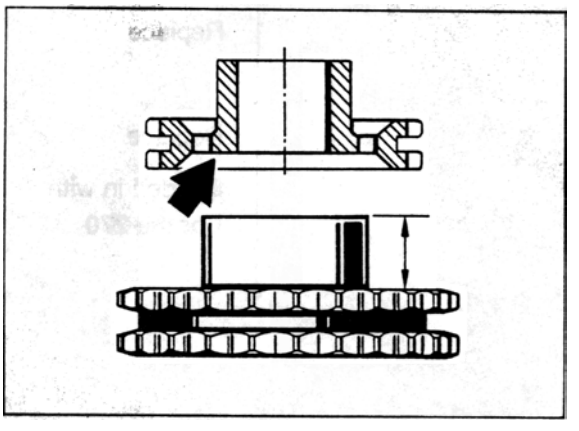

2165-15

Left chain sprocket / cylinders 1 - 3
part no. 993 105 546 01
Distinctive feature: flat collar (arrow)
high flange

15 31 37 Dismantling and assembling chain housing with cam drive

Camshaft drive with single-part chain sprocket flange (four-hole chain sprocket)

Cylinder bank 4 - 6

Before dismantling, set engine cylinder 1 to firing TDC (overlap TDC of cylinder 4). Punch marks of both camshafts now point up.

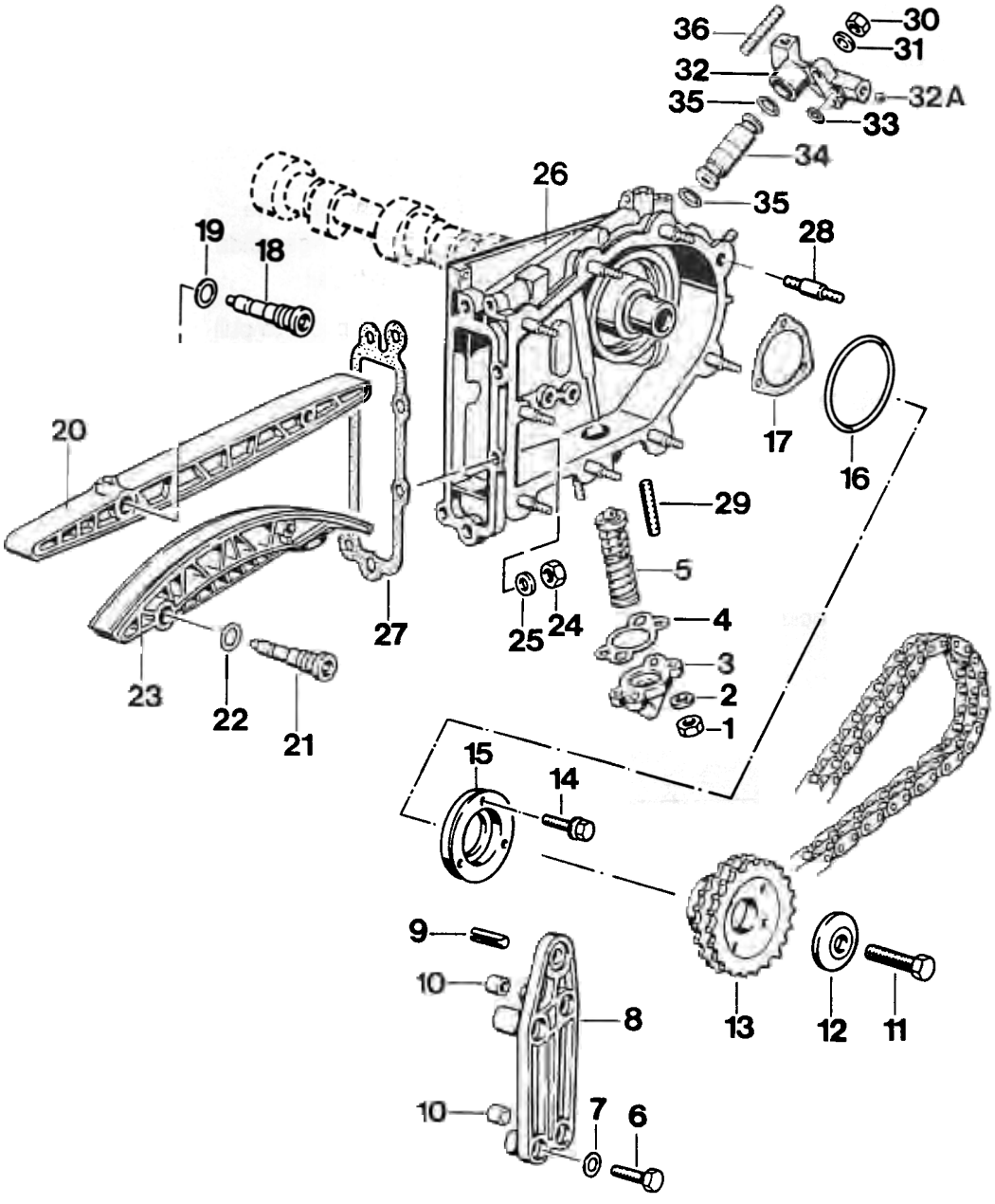

No.	Designation	Qty.	Note: Removal	Installation
1	Lock nut	2		
2	Washer 6.4 x 14 x 3	2		
3	Cover	1		
4	Gasket	1		Replace
5	Chain tensioner	1		Oil supply hole points down, spring cups are also marked **"top"** and **"RH bottom"** for identification
6	Hexagon head bolt M 6 x 18	4		
7	Washer 6.4	4		
8	Bearing bracket	1	When levering off, take care not to damage guide edges of slide rail	
9	Roll pin 10.5 x 43	1	Use vise-grip pliers to pull out of chain housing	Check for correct seating in chain housing
10	Sleeve 8 x 8	2		Check for correct seating in bearing bracket
11	Hexagon head bolt M 12 x 1.5 x 50	1	Use locking device to lock	Use locking device to lock
12	Washer	1		
13	Chain sprocket	1	Lift off chain	Check teeth for wear, fit to camshaft with chain placed into position.

No.	Designation	Qty.	Note: Removal	Installation
14	Screw/washer assy. with captive washer	3		
15	End cover	1	Press off between chain casing and camshaft housing using a suitable tool	
16	O-ring	1		Replace. Check mounting area in chain housing and deburr edges if required. Grease outer circumference lightly. Do not twist when refitting
17	Gasket	1		Replace
18	Retaining pin	1		Tighten to **31 Nm** (23 ftlb.)
19	Seal A 16 x 20	1		Replace
20	Slide rail	1		Slide rail must be felt to engage into the groove of the retaining pin
21	Retaining pin	1		Tighten to **31 Nm** (23 ftlb.)
22	Seal A 16 x 20	1		Replace
23	Tensioning rail	1		Tensioning rail be felt to engage into the groove of the retaining pin
24	Lock nut	5		
25	Washer 8.4 x 18 x 3	5		
26	Chain housing	1		Check seating area of O-ring (No. 18) and deburr if required
27	Gasket	1		Must always be replaced, coat both sides with Loctite 574
28	Flanged pin	9		Tighten to **7 Nm** (5 ftlb.), bonded in place with **Loctite 270**

No.	Designation	Stück	Note: Removal	Installation
29	Stud 6 x 18	2		Bonded in place with **Loctite 270**
30	Lock nut	2		Replace if required
31	Washer 6.4 x 14 x 3	2		
32	Flange (saddle)	1		
32A	Ball	1		
33	Seal 6 x 2.5	1		Replace
34	Pressure oil pipe	1		
35	Seal 8.2 x 2.8	2		Replace
36	Stud M 6 x 20	1		Bonded in place with **Loctite 270**

15 05 Camshafts, timing

	Engine type M 64/05/06	Engine type M 64/ 20
Camshafts		
Camshaft LH Cylinder bank 1...3	993.105.247.07	993.105.247.41
Camshaft RH Cylinder bank 4...6	993.105.246.07	993.105.246.41
Identification on front face of		
LH camshaft	993.247.07	993.247.41
RH camshaft	993.246.07	993.246.41
Timing for 1 mm valve lift and zero clearance		
Inlet opens	1° crankshaft BTDC	5° crankshaft BTDC
Inlet closes	240° crankshaft ABDC	238° crankshaft ABDC
Exhaust opens	225° crankshaft BBDC	230° crankshaft BBDC
Exhaust closes	2° crankshaft ATDC	2° crankshaft ATDC

15 31 37 Determining parallelity of chain sprockets

The parallelity offset between the driving sprocket on the intermediate shaft to the driven sprocket on the camshaft must not exceed ± **0.25 mm max.** Before measuring, move the intermediate shaft in axial direction towards the flywheel to make sure the support collar of the bearing is seated correctly.

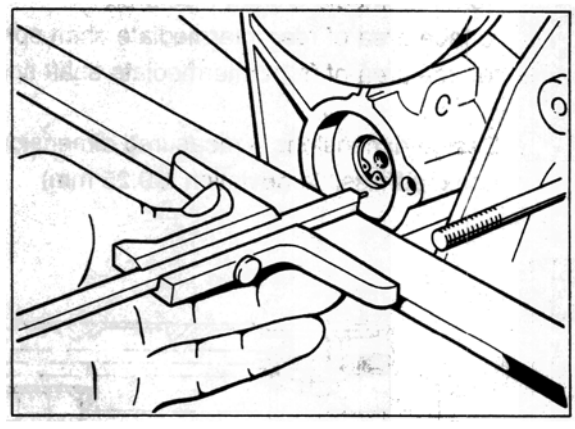

1307-15

To adjust the sprockets, insert or remove shims, Part No. 901.105.561.00 (shim thickness 0.5 mm). Usually, three shims are required below the left-hand sprocket (cylinders no. 1 - 3), and four shims are requied below the right-hand sprocket (cylinders no. 4 - 6).

Adjustment

Tighten hexagon head bolts of sprockets to approx. **30 Nm (22 ftlb.)**, using Special Tool 9551 or 9552 (camshaft locking tools) to lock.

Determine dimension "A" from crankcase front edge or ruler, respectively, to intermediate shaft face area.

Design dimensions of drive sprockets on intermediate shaft
from intermediate shaft face area -
to face area of rear intermediate shaft sprocket (cyls. no. 1 - 3) = 98.07 mm
to face area of front intermediate shaft sprocket (cyls. no. 4 - 6) = 43.27 mm

Design dimensions + measured dimension "A" is equal to position of sprockets on camshafts (max. admissible deviation ± 0.25 mm).

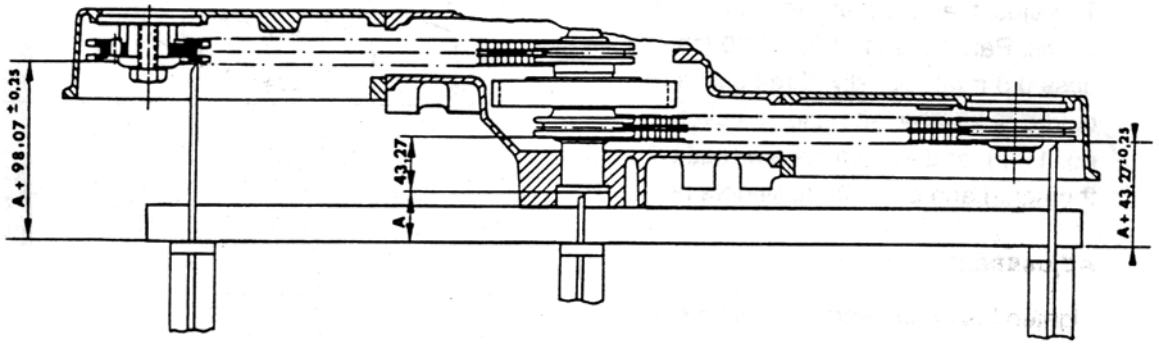

1304-15

Example: Measured dimension "A" = 35.5 mm
The value of the sprocket of cyls. no. 1 - 3 then equals: A + 98.07 =
35 + 98.07 = 133.57 ± 0.25 mm

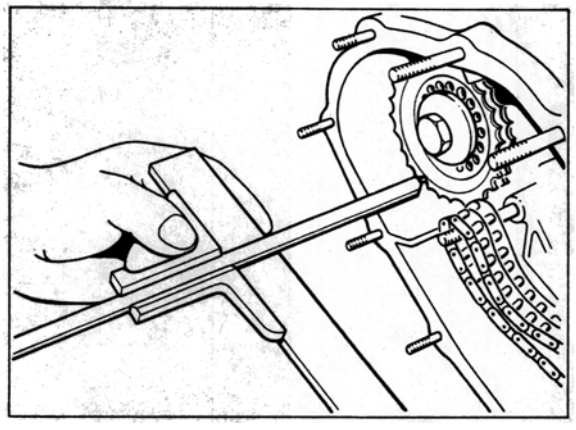

1305-15

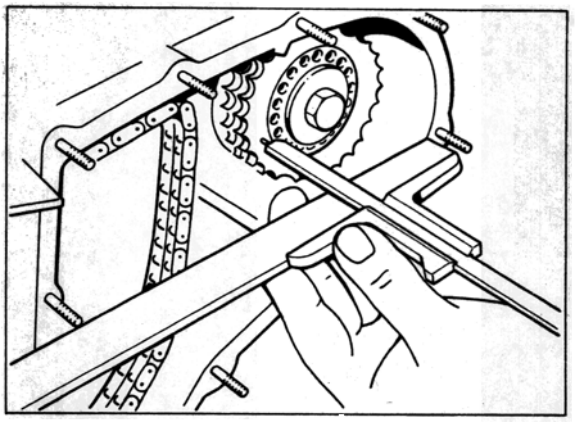

1306-15

The value for the sprocket of cyls. no. 4 - 6 then equals: A + 43.27 =
35 + 43.27 = 78.77 ± 0.25 mm

17 37 37 Dismantling and assembling oil temperature regulator housing

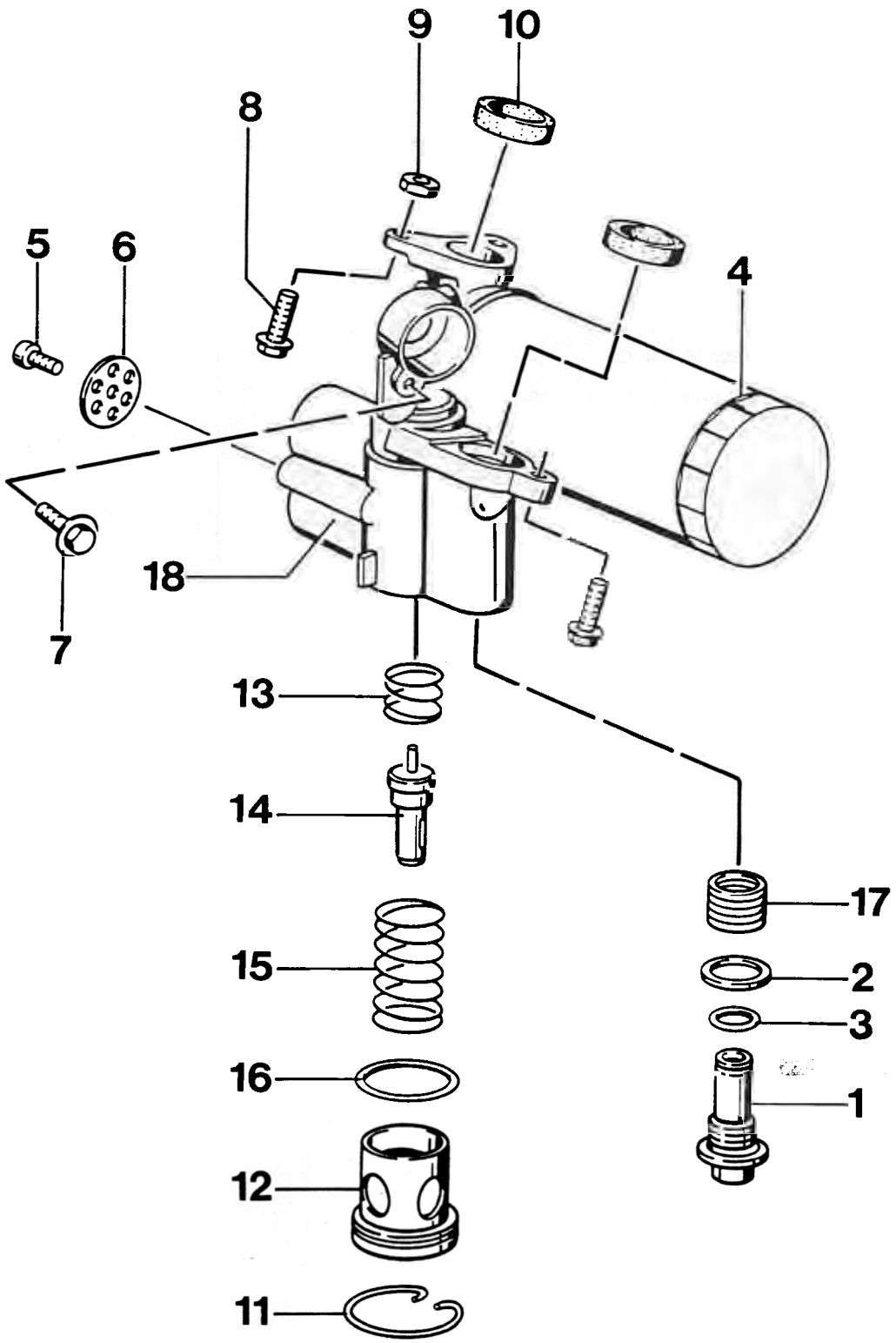

Printed in Germany – VII. 1994

No.	Designation	Qty.	Note: Removal	Installation
1	Oil drain plug	1		Tighten to 50 + 5 Nm.
2	Seal A 22 x 27	1		Replace.
3	O-ring 11 x 2.5	1		Replace.
4	Oil filter	1	Use Special Tool 9204.	Use Special Tool 9204.
5	Pan-head screw M 6 x 12	1		
6	Washer 6.5 x 28 x 2.0 (Lock washer for oil lines)	1		Domed side faces outside.
7	Combination screw M 6 x 16	1		
8	Pan-head screw M 6 x 18	3		
9	Hexagon-head bolt	3		
10	Seal	2		Replace, oil lightly.
11	Snap ring A 40.9	1		
12	Cover	1		
13	Compression spring, short	1		
14	Regulator insert	1		Check.
15	Compression spring	1		
16	O-ring 32 x 2.5	1		Replace.
17	Threaded insert M 20 x 1.5 x 15	1		Replace.
18	Oil temperature regulator housing	1		

Combination screw = Hexagon-head bolt with captive washer

Repair Manual

911 Carrera 4
(993)

Volume I:
General
Engine

Dr. Ing. h.c. F. Porsche Aktiengesellschaft

I General / Engine

10 Engine, Crankcase, Engine Mounts

10 01 19 Removing and installing the engine . . . . . 10 - 101

10 01 19 Removing and installing the engine

Special Tools

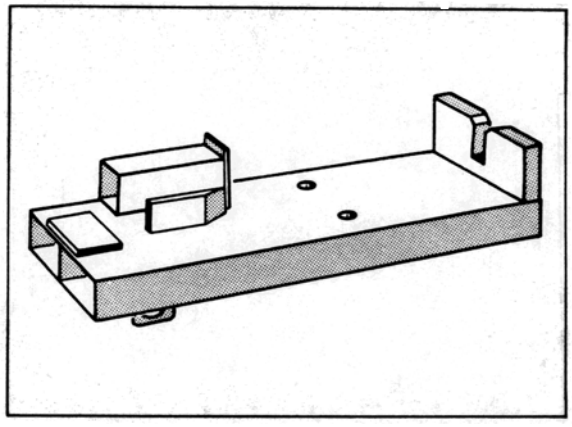

440-10

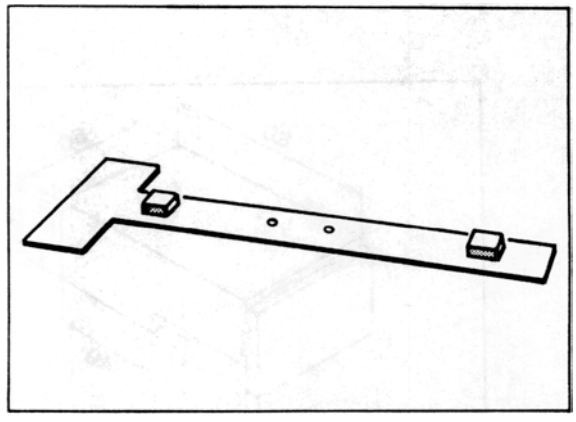

442-10

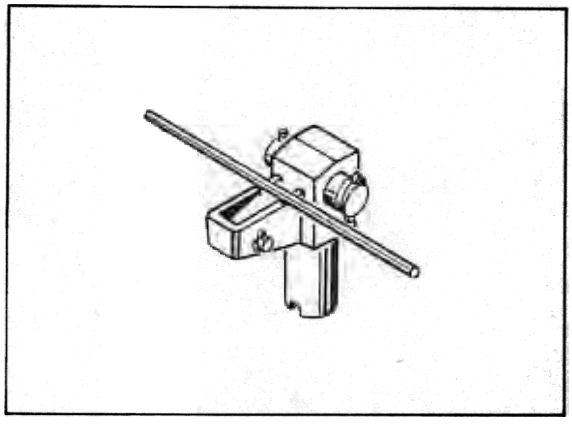

441-10

No.	Designation	Special Tool	Order No.	Description
1	Engine mounting plate	9111/3	000.721.911.13	Attach auxiliary support
2	Adapter for engine mounting plate	9111/1	000.721.911.11	
3	Support plate	9111/2	000.721.911.12	

Printed in Germany IX 1994

Auxiliary support for Special Tool 9111/3, attach engine mounting plate

The auxiliary support should be fabricated in the shop

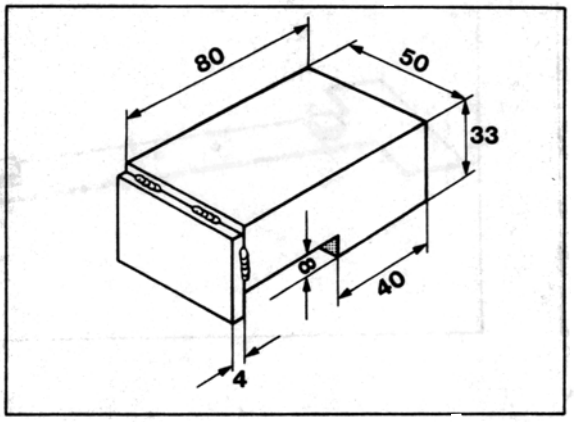

1775-10

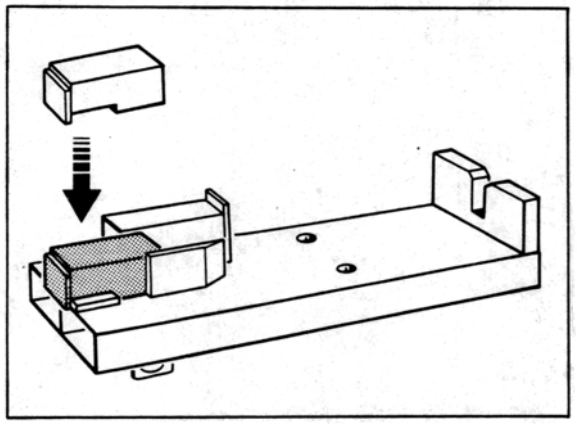

1776-10

10 01 19 Removing and installing the engine

The engine and transmission assembly is removed as a unit from below.

Removal

Raise vehicle at jacking points.

Disconnect battery ground cable

3. Place a suitable protective cover or a piece of hose on upper lock section protruding from engine compartment cover (to avoid injury). Place rear protective cover into position.

4. Disconnect connector, remove air conditioning compressor from console and leave it attached to the hoses connected to it. The compressor can be placed on a suitable rigid support on the left-hand side panel.

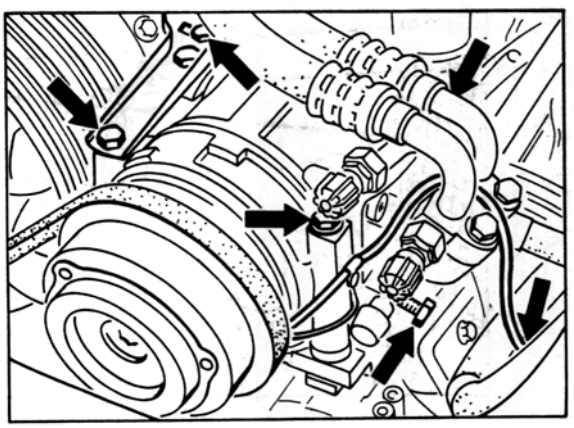

1477-8

5. Remove complete air cleaner assembly.

6. Remove switch-over flap (fresh air / engine air) and rear heater blower.

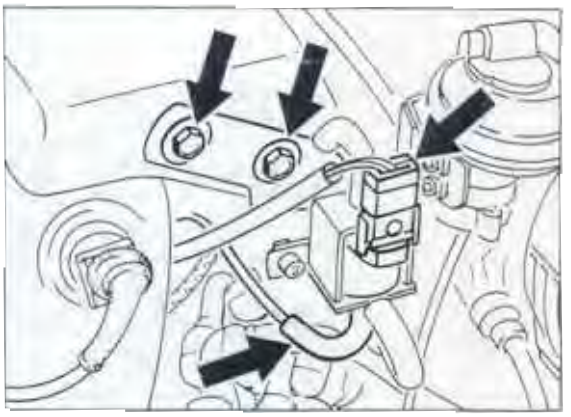

7. Remove cover of electrical system in engine compartment. Disconnect connectors carefully (to avoid breakage).

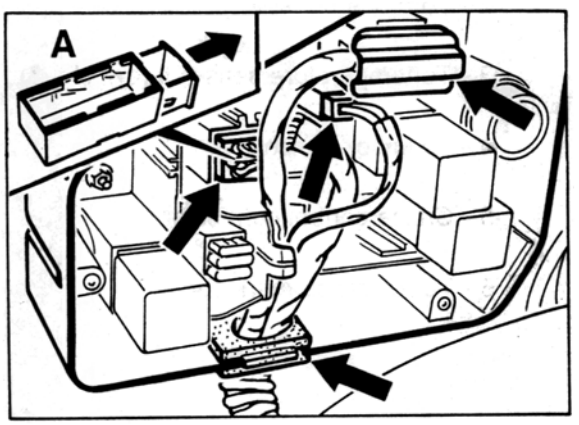

Note

Unlatch connector A before pulling off.

8. Disconnect the following connectors or wires in left front engine compartment area:

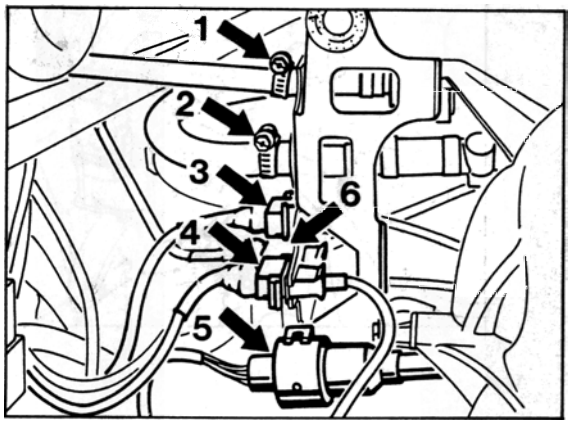

1458-10

- To carbon canister

2 - To brake booster

3 - To temperature sensor II (cyl. No. 3)

4 - To knock sensor

5 - Cruise control connector

6 - To reference mark sender

9. Undo hexagon head bolt and take off wiring bracket. Disconnect connectors. (Take care not to damage connector seal).

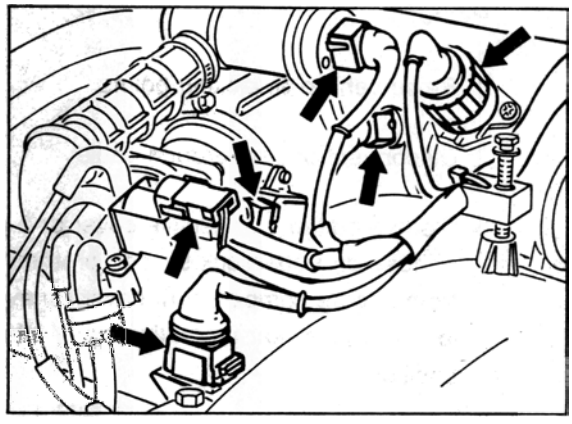

1475-15

10. Pull off both hose connections of crankcase / oil reservoir breather.

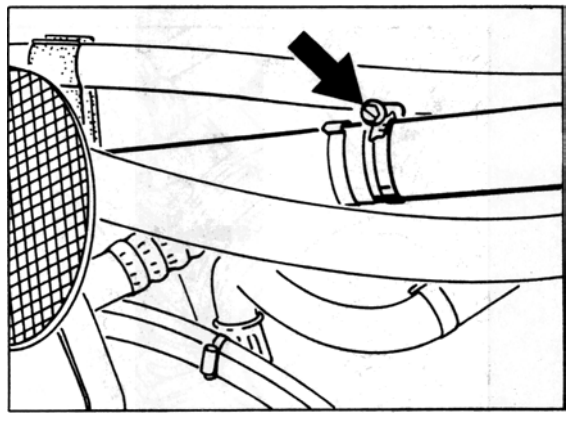

1594-10

11. Detach breather hose from resonance flap housing.

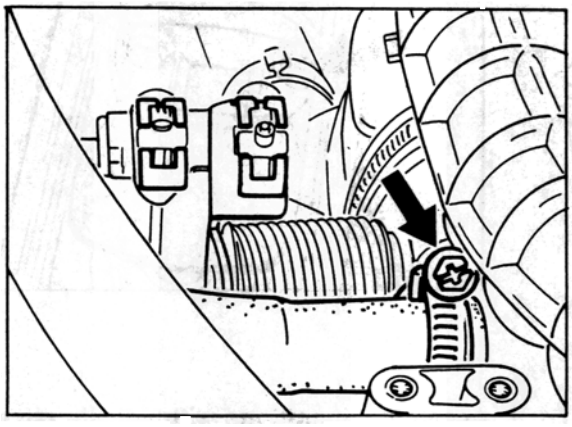

2024A-10

12. Release throttle operating cable. Push rubber grommet out of bracket.

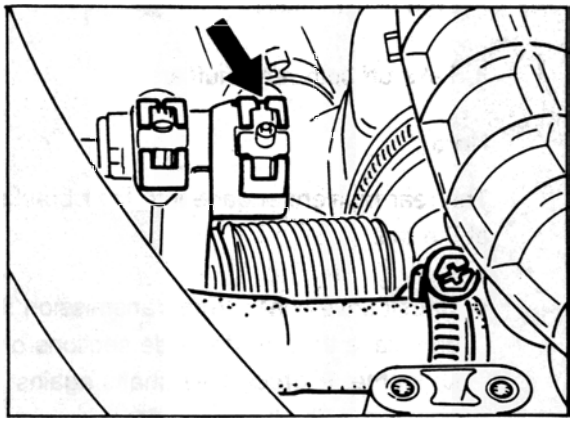

2024B-10

13. Pull off cover, unlatch oxygen sensor connector and pull off connector.

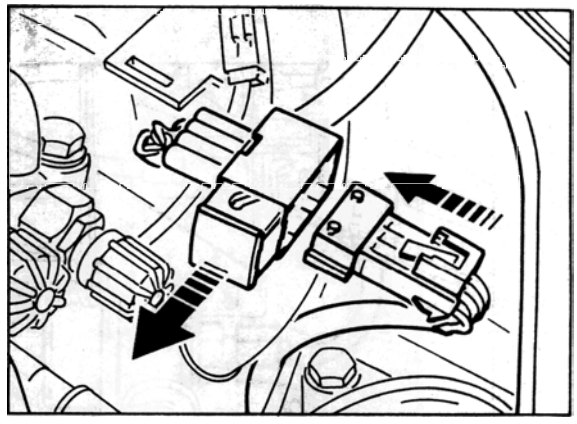

1630-15

14. Drain power steering pump tank (draw off fluid). Pull off spark plug connectors of cyl. No. 4 and cyl. No. 5. Place suitable container under power steering pump. Undo hoses and catch spilling fluid. Plug all openings immediately (to prevent dirt ingress).

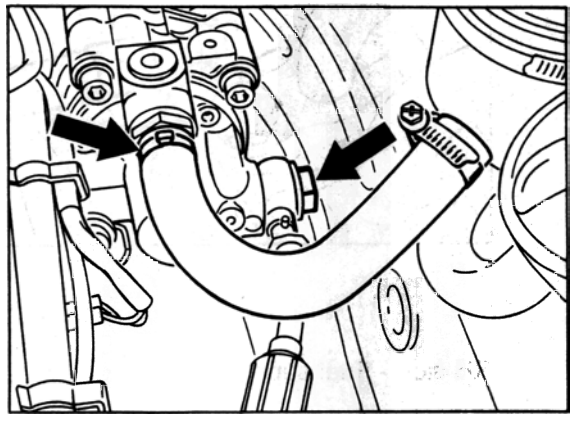

230-10

15. Undo fuel return and fuel supply lines, using a second wrench to lock. Catch overflowing fuel in a suitable pan.

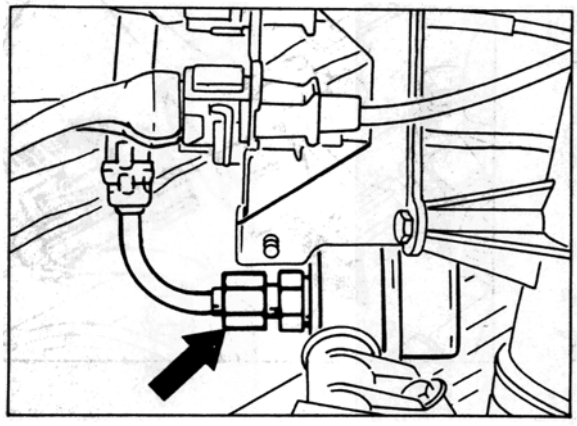

LH side - Fuel return

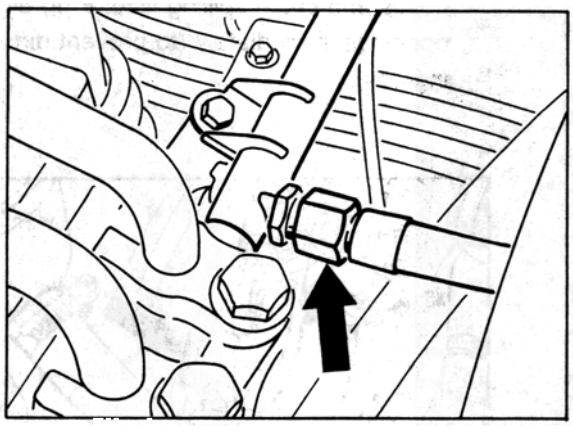

RH side - Fuel supply

16. Remove rear oddments tray from center tunnel console. The fastening screw is located under the rubber insert.
Flip damping tab over. Remove cover.
Unscrew central tube to transmission fastening bolts.

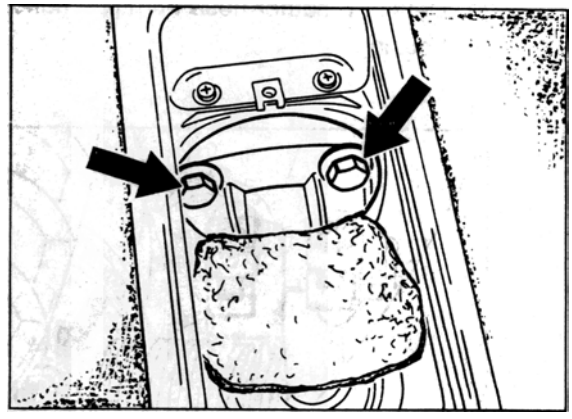

2025-10

Assembly operations with vehicle raised off the ground:

1. Take off undertrays of engine, transmission and central tube.

2. Release ball clamps and remove tailpipes from rear mufflers.

3. Take off both rear mufflers.

Note

The rear mufflers engage into their brackets at the top.

4. Unbolt drive shafts from transmission flange and place them on the side sections of the subframe. **Protect** drive shafts against damage, e.g. with short hose sections.

5. Push rubber boot forward over shift rod coupling and release fit bolt.

6. Unscrew both Allen bolts from clamping sleeve and push clamping sleeve forward on central shaft.

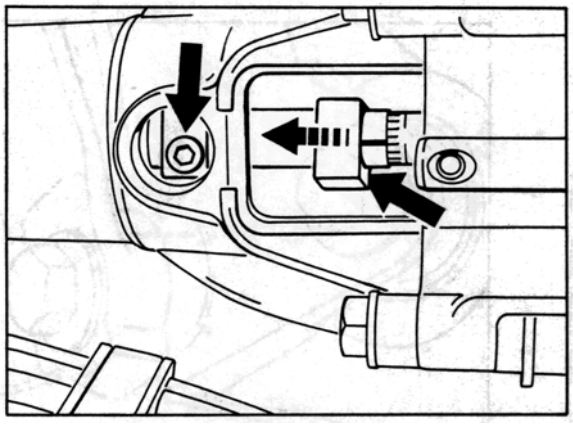

2023-10

7. Install shop-made flat iron bar tool. (To support central tube when unbolting the tube).

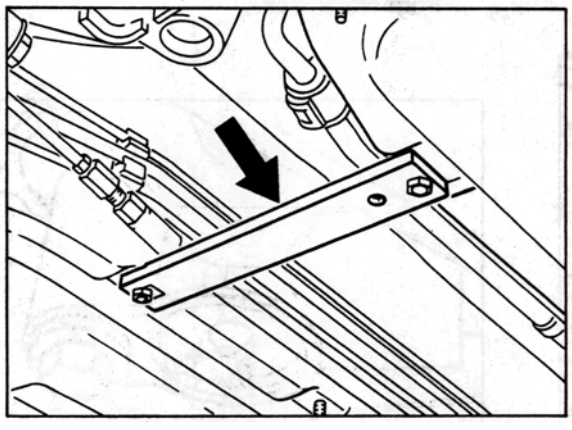

2022-10

Diagram of shop-made tool

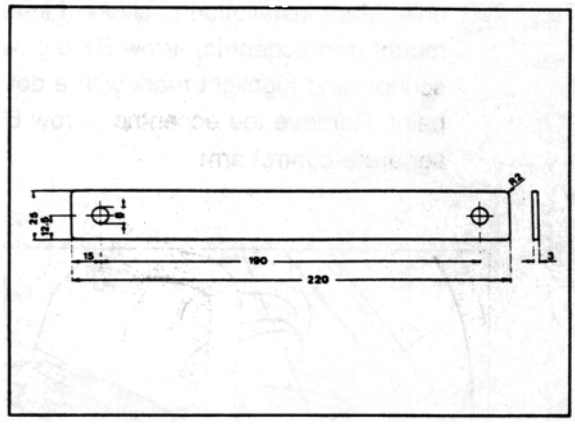

2029-10

8. Take off heater air hoses, heater air pipes, heater air flaps and front transverse strut.

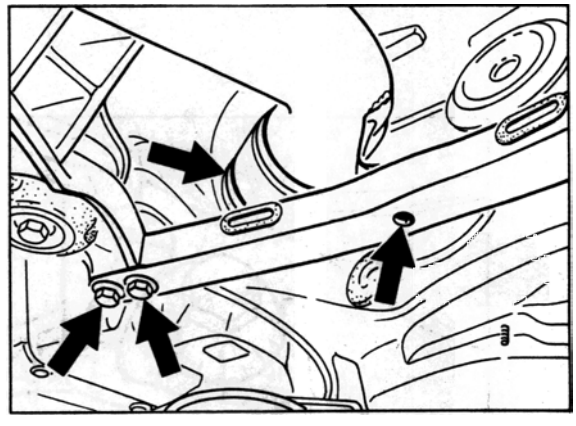

1616-10

9. Remove complete stabilizer bar assy.

10. Separate toe arms (arm No. 2) at both ends. Slacken outer mounting (arrow A) only. Mark installation position of inner mount (toe eccentric, arrow B), e.g. with a scriber, and highlight mark with a dot of paint. Remove toe eccentric (arrow B) and separate control arm.

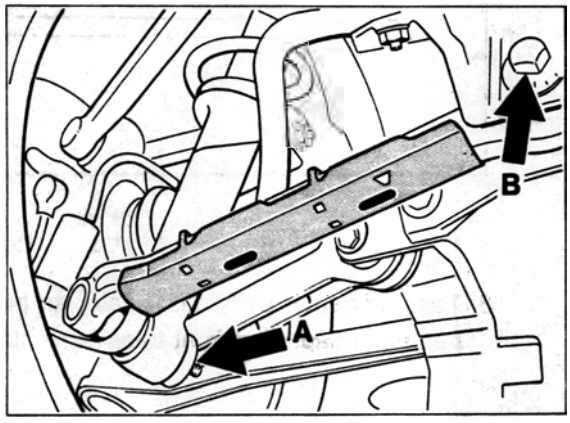

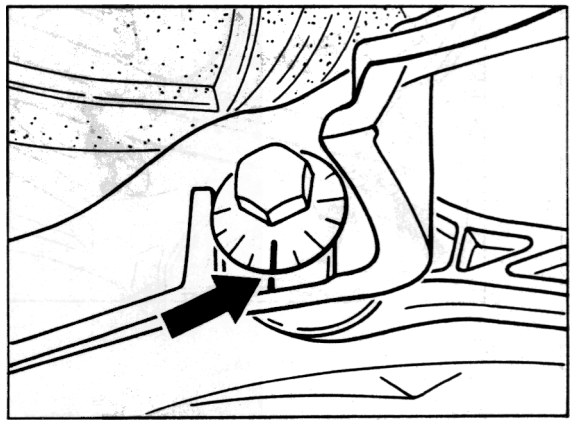

11. Mark position of rear crossmember. Remove crossmember (four mounting bolts).

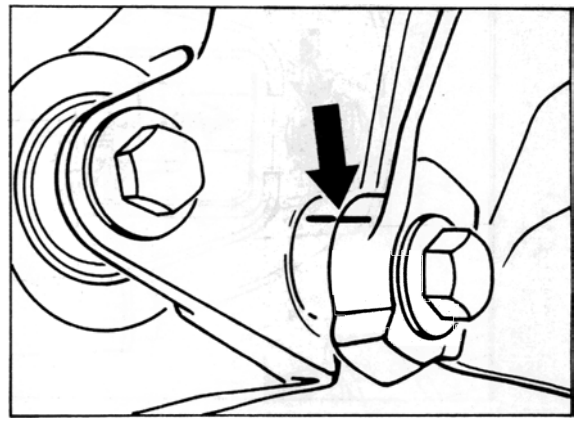

1482-10

12. Undo right-hand sill cover and drain engine oil from thermostat housing. When the engine has to be rebuilt, also drain oil from crankcase.

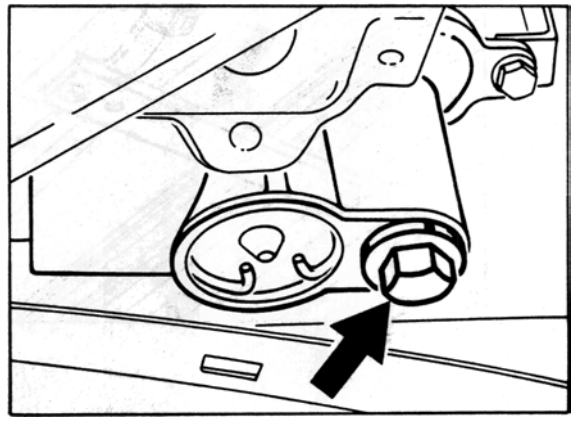

1454-03

13. Undo ground strap between body and starter motor from lower starter mount.

14. Release wire No. 30 from starter.

15. Unbolt clutch slave cylinder and suspend to one side complete with the fluid line remaining connected.

16. Separate oil return line from transmission.

17. Undo oil return line, using a second wrench to lock. Plug oil return line (36 A/F) and screw-in flange (32 A/F).

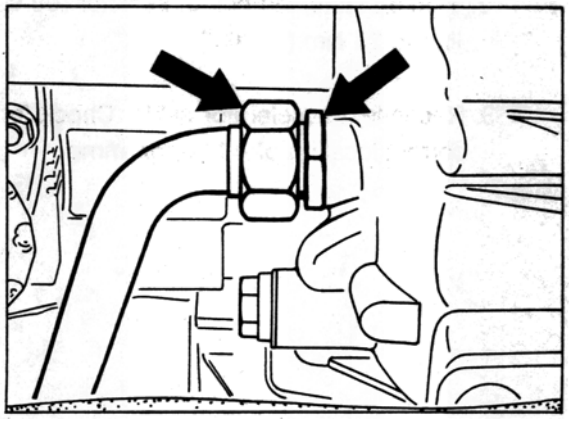

1598-10

18. Release hose clamp from oil supply line and catch remaining oil in a pan.

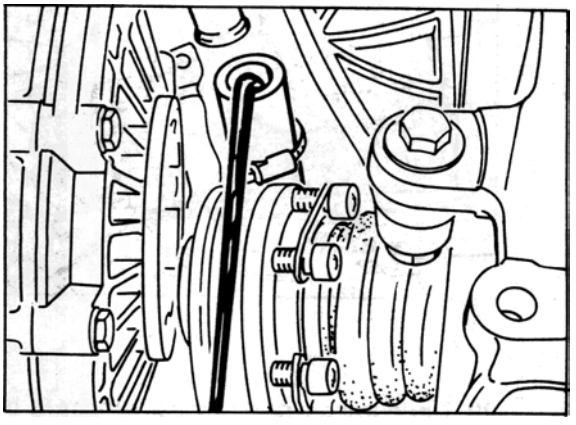

2028-10

19. Place jack with engine support plate under vehicle, placing jack under light preload.

Note

a. Notice position of support plate. Lock lever in horizontal position.

b. The support blocks of the support plate **point downward**.

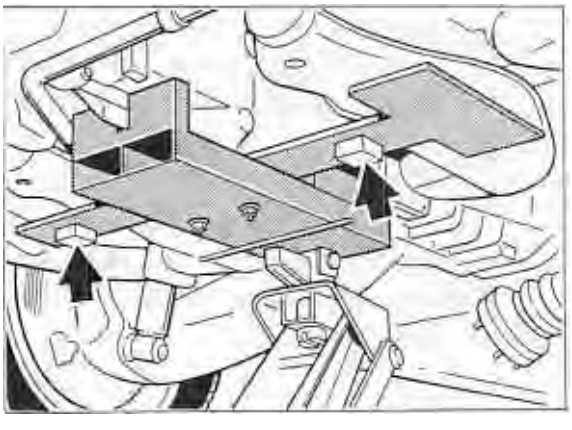

1381-10

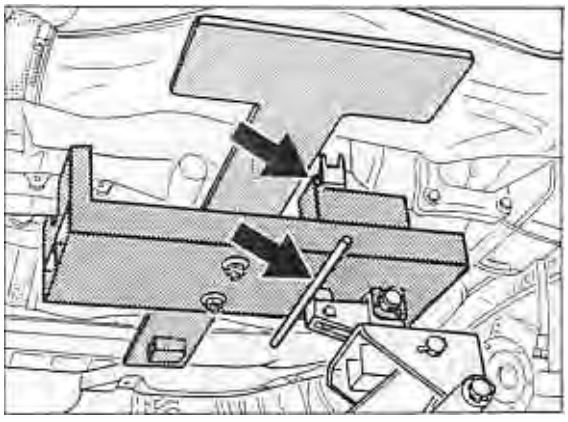

459-10

20. Undo transmission crossmember (6 bolts). Unbolt engine mount (use long socket).

21. Take off inspection cover of assembly cutouts for engine mount in rear engine end plate and undo hexagon head nuts from engine mounts.

22. Lower engine/transmission assembly until central tube rests on the shop-made flat iron bar.

23. Lower engine/transmission unit further. Move or place right-hand drive shaft over starter. Take care not to damage lower spark plug socket (cyl. No. 3) and clutch housing breather pipe and accelerator cable when lowering the assembly.

Caution

When the vehicle is placed on its wheels, the rear cross member and both arms No. 2 should be installed to ensure stability of the vehicle.

Note

Do not actuate the clutch pedal when the slave cylinder has been removed. **Attach a note to this effect inside the vehicle.**

Installation

When refitting the engine, observe the following:

1. Check all hoses and oil lines to make sure all plugs have been removed completely - **particularly in the elbow sections of the hoses and oil lines.**

2. Tighten fastening bolt of selector rod coupling to 23 Nm (17 ftlb.).

3. Reconnect accelerator cable. Check for correct location of rubber grommet.

4. Install engine compartment rubber seal between body and engine paneling. Take care to fit rubber seal correctly.

5. Check for correct positioning of inner rubber seals of connectors.

Caution
To protect the paneling against damage when removing and installing the engine unit, attach a shop-made sheetmetal panel to the rear muffler that will allow the power unit to slide off without causing damage.

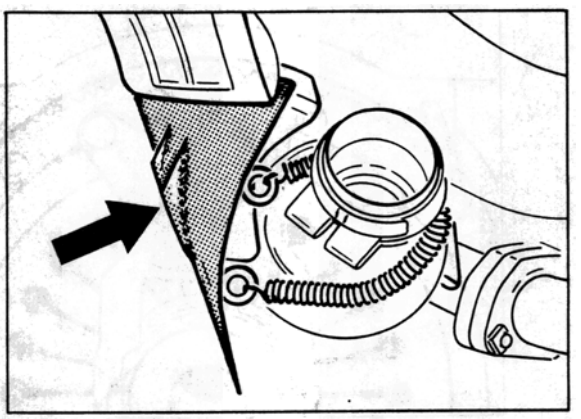

2034-10

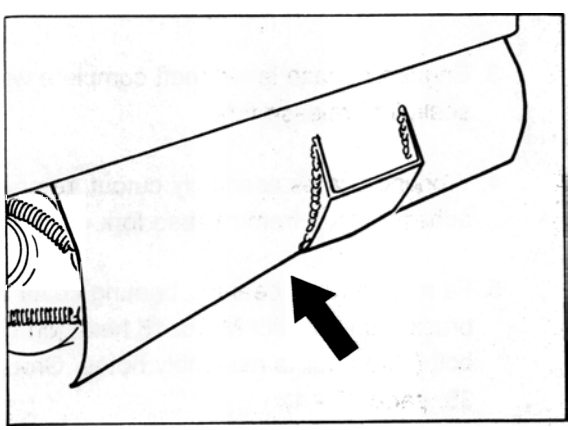

2035-10

Unbolting and refitting the engine

1. Take wire off the starter and detach wire from reverse light.

2. Remove M 6 x 16 hexagon head bolts, bracket and bearing cover. Pull out release lever shaft with M 6 x 40 hexagon head bolt.

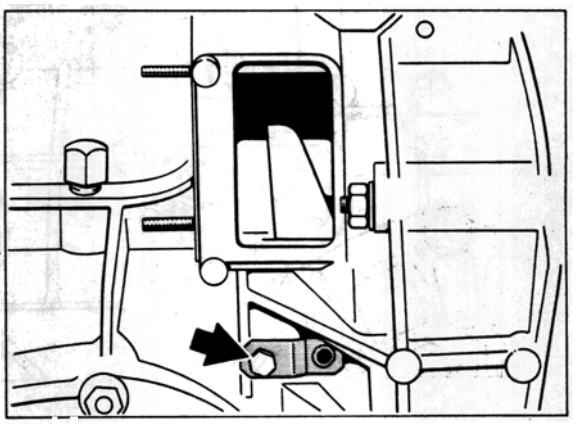

1391-10

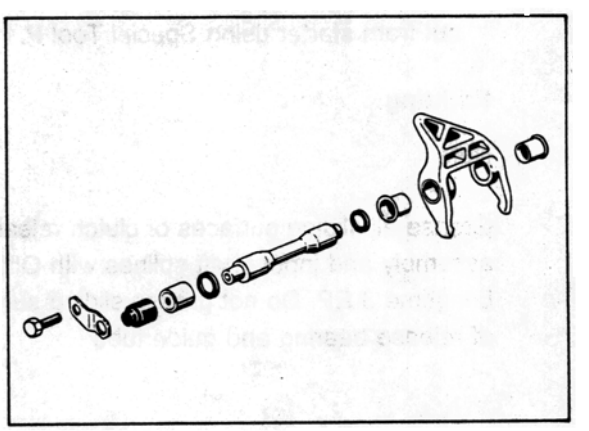

1388-10

Removing the bearing cover

Working across rectangular aperture, use a suitable screwdriver to push bearing cover (of clutch bellhousing) out of bearing hole.

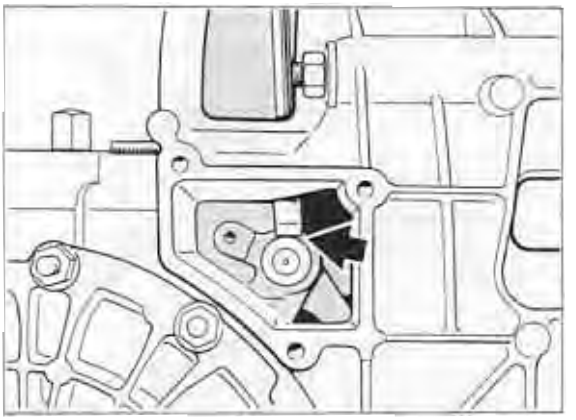

1865-30

3. Undo four mounting nuts and separate transmission from engine. Undo upper mounting nut from starter using Special Tool **P 1119**.

Refitting

Grease all sliding surfaces of clutch release assembly and input shaft splines with Olista, Longtime 3 EP. Do not grease sliding surface of release bearing and guide tube

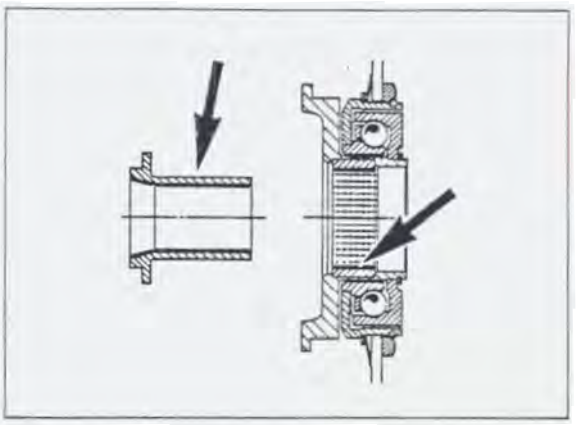

1867-30

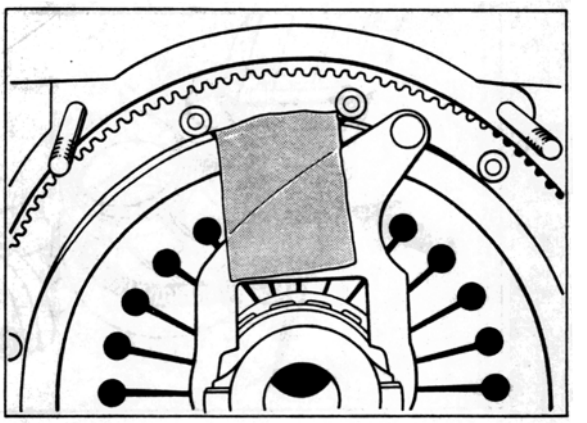

1390-10

2. Fit transmission to engine.

3. Engage release lever shaft complete with seals into release fork.

4. Working across assembly cutout, remove adhesive tape from release fork.

5. Fit needle roller bearing, bearing cover and bracket and fit with M 6 x 16 hexagon head bolt (also refer to assembly notes, Group 30, page 30 - 1).

Note

Fitting bearing cover

Locate bearing cover with assembly mandrel, e.g. Special Tool 9287 (mandrel for removing actuator of headlight beam adjuster) and push cover carefully home to stop.

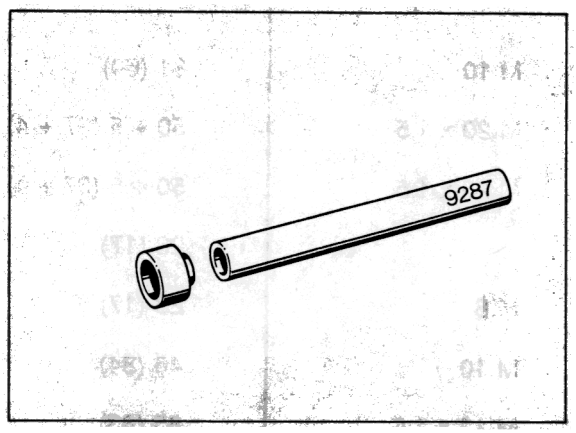

1866-30

10 Tightening torques: Removing and installing the engine

Location	Thread	Tightening torque Nm (ftlb.)
Engine to engine mount	M 12	85 (63)
Transmission support to body	M 12	46 (34)
Drive shaft to transmission flange	M 10	81 (60)
Thermostat housing drain plug	M 20 x 1.5	50 + 5 (37 + 4)
Crankcase drain plug	M 20 x 1.5	50 + 5 (37 + 4)
Shift rod (fit bolt)		23 (17)
Stabilizer bar to crossmember	M 8	23 (17)
Stabilizer mount to spring strut	M 10	46 (34)
Control arm 2 to crossmember (eccentric)	M 12 x 1.5	85 (63)
Control arm 2 to toe control arm	M 12 x 1.5	85 (63)
Rear crossmember to side sections	M 12 x 1.5	120 (88)
Front crossmember to side sections	M 10	65 (48)
Pressure pipe to power pump	M 14	30 (22)
Drive shaft to transmission	M 10	81 (60)
Wheel to wheel hub	M 14	130 (96)
Fuel return pipe		35 (26)
Fuel feed pipe		35 (26)
Starter motor to transmission		46 (34)

20 02 01 Checking fuel pressure

Special tools

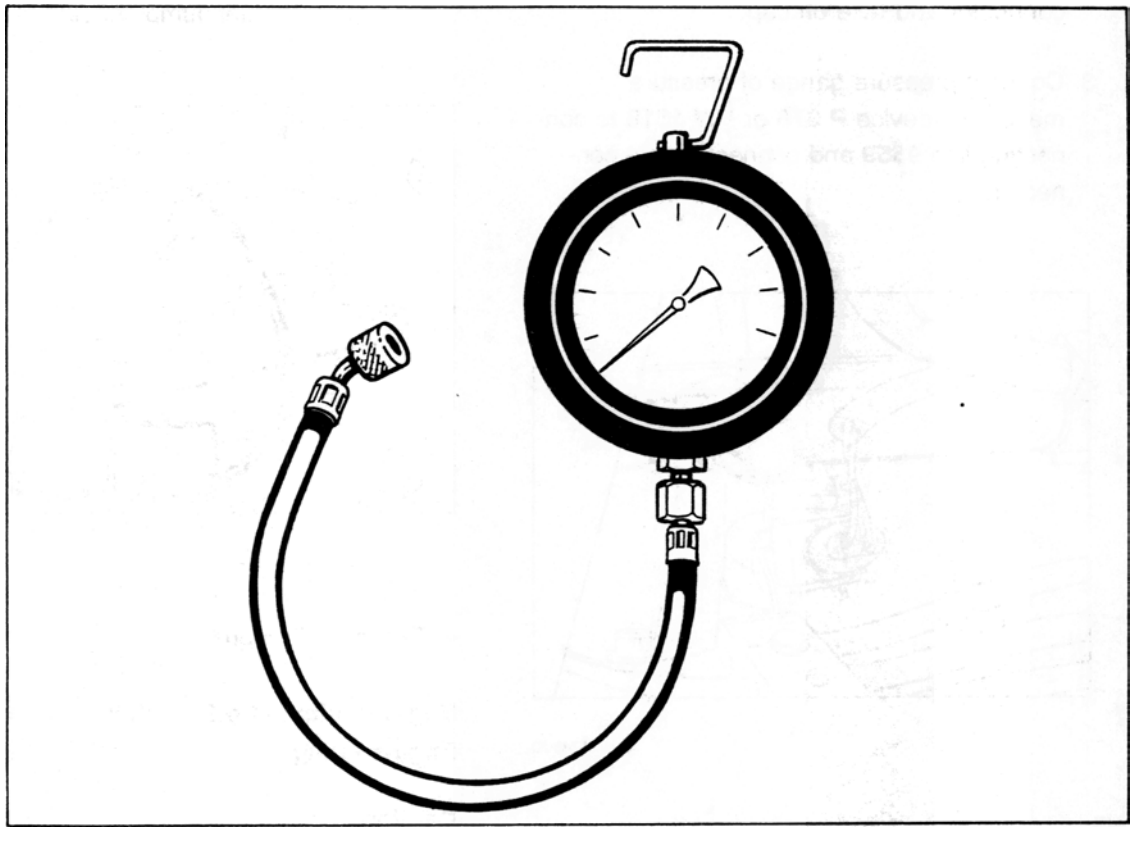

1731-20

No.	Designation	Special tool	Order number	Explanation
1	Pressure gauge for pressure measuring device	P 378 or V.A.G. 1318	000.721.378.00 Z 40 11 WE	
2	Connecting line	9559	000.721.955.90	

20 02 01 Checking fuel pressure

1. Remove heater fan from left-hand rear engine compartment area.

2. Detach cap from fuel collection pipe test connector and take off cap.

3. Connect pressure gauge of pressure measuring device **P 378** or VW 1318 to connecting line **9559** and connect to test connector.

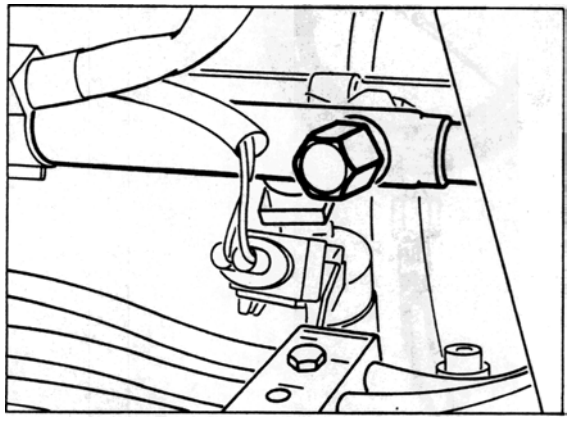

1743-20

4. Pull DME relay (R53) off the Central Electrical System and use a fuse-protected shop-made jump lead to connect pin 30 to pin 87 b (identifications 3 and 7 on Central Electrical System). The fuel pump should now operate.

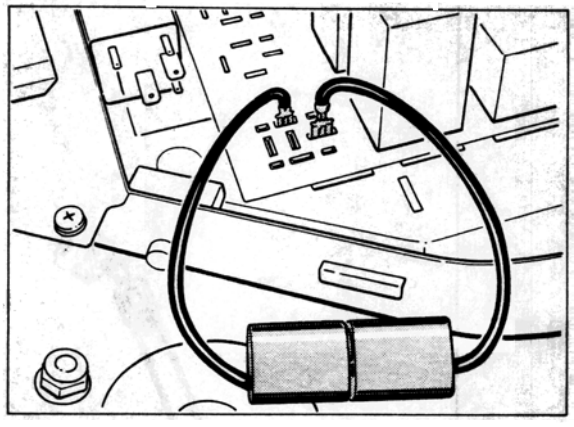

1728-20

4. Test specifications:

Engine switched off	**3.8 ± 0.2 bar**
Engine idling	**3.3 ± 0.2 bar**

Caution

The plastic cap at the test connector must always be replaced by a new brass cap (Part No. 993.110.218.01).

The seal in the brass cap **cannot** be replaced. The brass cap must therefore be used only **once**.

Tighten new brass cap to 2.5 + 0.5 Nm (1.8 + 0.4 ftlb).

20 66 01 Checking fuel pump delivery

Requirements:

Fuel filter and voltage supply o.k.

1. Remove heater fan from left-hand rear engine compartment area.

2. Undo fuel return pipe from branch piece, using a second wrench to lock. Drain remaining fuel into a suitable container.

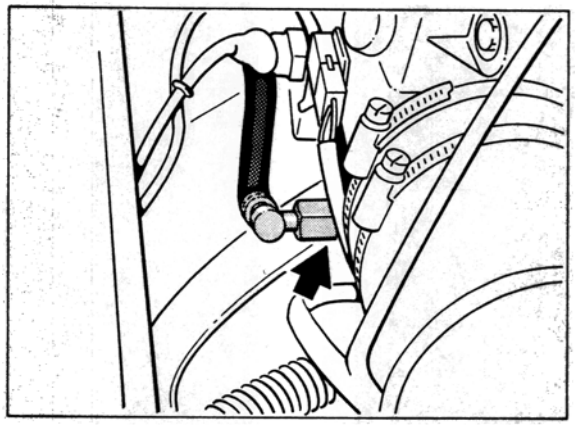

1729-20

3. Connect Special Tool, connecting hose 9507, Part No. 000.721.950.70, and route it into a fuel measure.

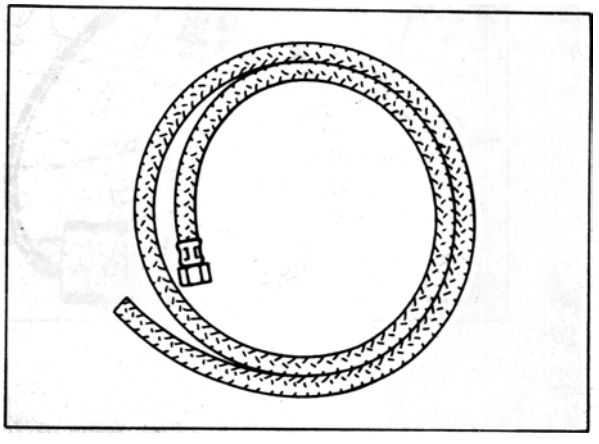

1742-20

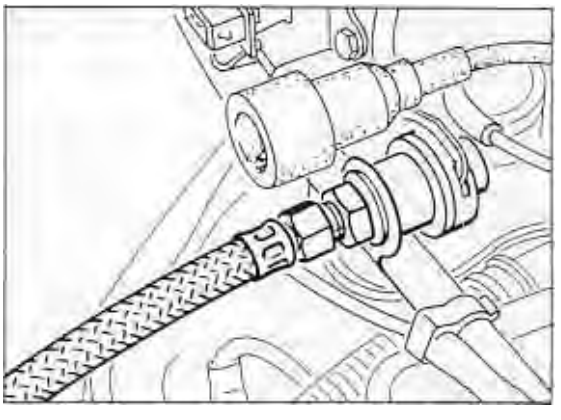

1744-20

4. Pull DME relay (R53) off the Central Electrical System and use a fuse-protected shop-made jump lead to connect pin 30 to pin 87 b (identifications 3 and 7 on Central Electrical System). The fuel pump should now operate.

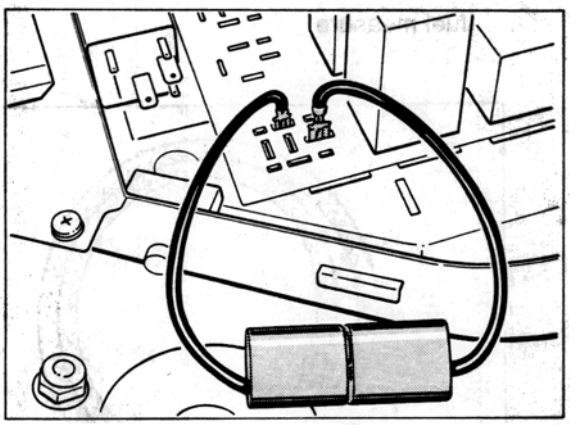

1728-20

5. Allow fuel to drain into a fuel measure for 30 seconds.
Minimum fuel delivery 850 cc/30 sec,
i.e. at least 850 cc of fuel should have collected in the fuel measure after 30 seconds have elapsed.

24 04 Test specifications

Engine type M 64/05/06

Engine type M 64/20 (values in brackets)

Test	Test and adjustment specifications		Remarks
Elecric fuel pump			
Delivery rate	at least 850 c.c./30 s		
Fuel pressure (engine off)			
Fuel pump relay jumpered	3.8 ± 0.2 bar		
Test value at idle	approx. 3.3 ± 0.2 bar		
Leak test			
Minimum pressure after 20 mins.	3.0 bar		
	without catalytic converter	with catalytic converter	
Idle speed rpm *	800 ± 40* (960)	800 ± 40* (960)	* The idle speed can only be checked. No idle adjustment.
CO values	0.5...1.0	0.4...1.2*	* Measured upstream of catalytic converter, oxygen sensor connector not disconnected. No CO adjustment.
HC values ppm	≤ 300	≤ 300	

Idle speed of engine type M 64/06 Tiptronic with driving range selected: 750 ± 40 rpm

24 04 Checking idle speed and CO level

Vehicles with catalytic converter

Engine type M 64/05/06

Note

Idle and CO level adjustment is no longer possible on vehicles fitted with a catalytic converter. The oxygen sensor is not disconnected during the idle CO test.

Test requirements

Engine in perfect mechanical condition. Loads must be switched off during the checks. Run check as quickly as possible to keep the intake ducts from heating up and causing faulty CO level readings. Ambient temperature 15...35 deg. C.

1. Fit exhaust gas adapter to test connector of catalytic converter.

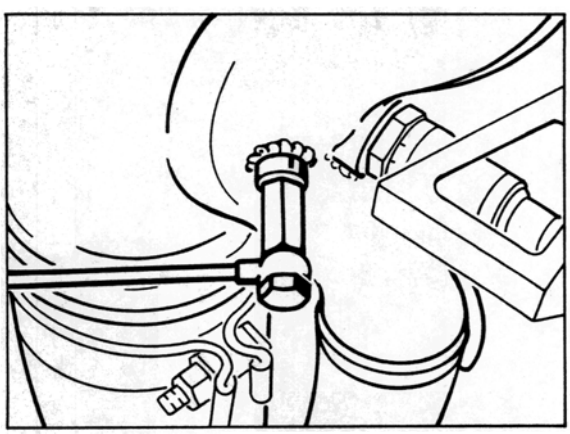

1419-24

2. Warm up engine to operating temperature (70...90 deg. C oil temperature).

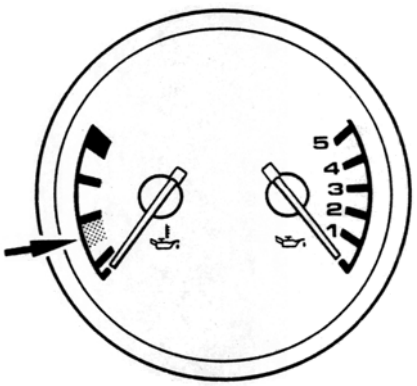

129-03

3. Do not disconnect oxygen sensor connector. Connect CO meter and additional rev counter to manufacturer's instructions.

CO check value: 0.4...1.2%

Idle speed: 800 ± 40 rpm

24 04 Checking idle speed and CO level

Vehicles without catalytic converter

Engine type M 64/05/06

Note

No provision for idle speed adjustment is made anymore. Adjustment on the throttle body is therefore omitted.

Idle CO adjustment
Adjustment requirements

Perfect mechanical condition of engine. Loads must be switched off during the checks. Run check as quickly as possible to keep the intake ducts from heating up and causing faulty CO level readings. Ambient temperature 15...35 deg. C.

1. Warm up engine to operating temperature (70...90 deg. C oil temperature).

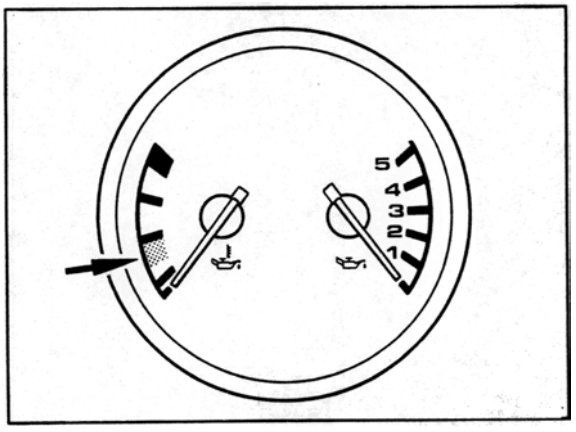

129/03

2. Check CO level. If the CO level is not within the specified range, correct the setting at the CO adjustment screw

3. The CO potentiometer is located behind the cover on the carrier plate for plug connections on the right-hand rear side of the engine compartment. Remove plugs from access hole to CO adjustment screw.

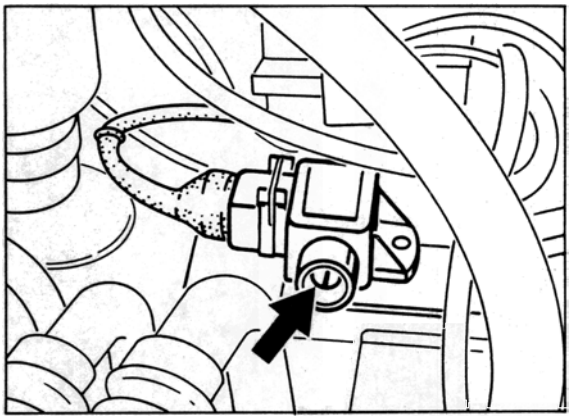

1418-24

CO adjustment: 0.5...1.0%
Right-hand turn - richer mixture
Left-hand turn - leaner mixture

Checking idle speed

1. Connect separate rev counter according to manufacturer's instructions.

Idle speed: 800 ± 40 rpm

24 46 19 Removing and installing intake distributor (injection system components)

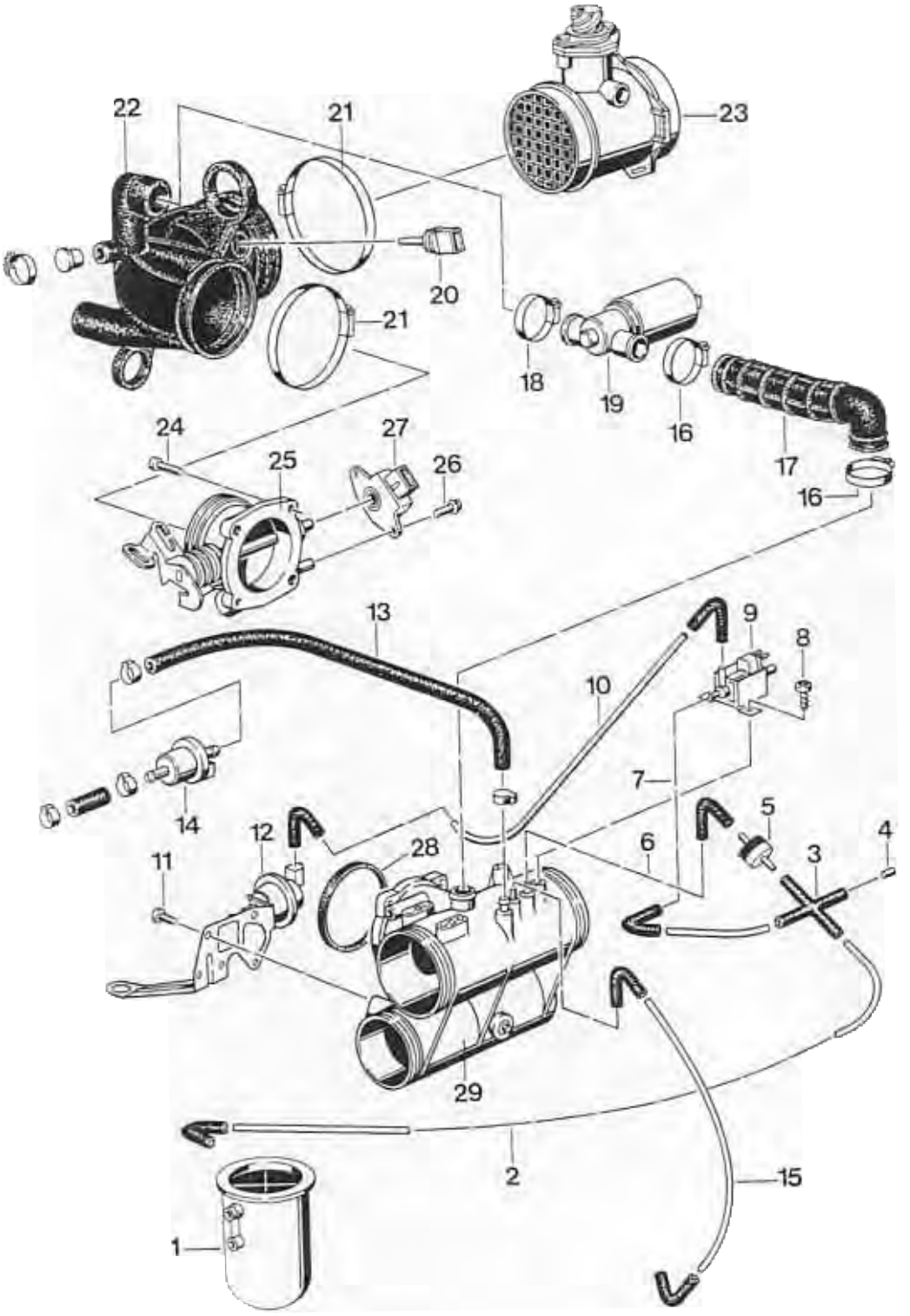

No.	Designation	Qty.	Note: Removal	Installation
1	Vacuum accumulator	1		
2	Vacuum line	1		
3	Branch piece	1		
4	Plug 4.0 x 10	1		
5	Check valve	1		Check for free flow (flow is only possible in one direction). Black side faces intake distributor
6	Line to intake distributor (RH connection)	1		
7	Line to vacuum shift valve	1		
8	Oval-head screw M 5.0 x 12	2		
9	Vacuum shift valve	1		
10	Line to vacuum modulator	1		
11	Oval-head screw	5		
12	Vacuum modulator for tuning flap	1		
13	Line	1		
14	Tank vent	1		May be checked via "Drive links" menu item. Observe correct flow direction! Arrow points towards intake distributor
15	Line to fuel pressure regulator (length 580 mm)	1		
16	Hose clamp 25 - 40/9	2		

No.	Designation	Qty.	Note: Removal	Installation
17	Hose	1		Check for correct seating
18	Hose clamp 25 - 40/9	1		
19	Idle speed control	1		
20	Intake air temperature sensor	1		Grease sparingly, e.g. with Contifix. May be checked with "Actual values" menu item
21	Hose clamp	2		
22	Cowl	1		
23	Air flow sensor	1		
24	Pan head screw M 5 x 18	4		
25	Throttle body	1		
26	Screw M 4 x 10	2		
27	Throttle potentiometer	1		May be checked with "Actual values" menu item
28	Seal	1		Must always be replaced
29	Intake distributor	1		Check that tuning flap does not bind

24 46 37 Dismantling and assembling intake distributor

911 Carrera RS engine with Varioram induction system (M 64 / 20)

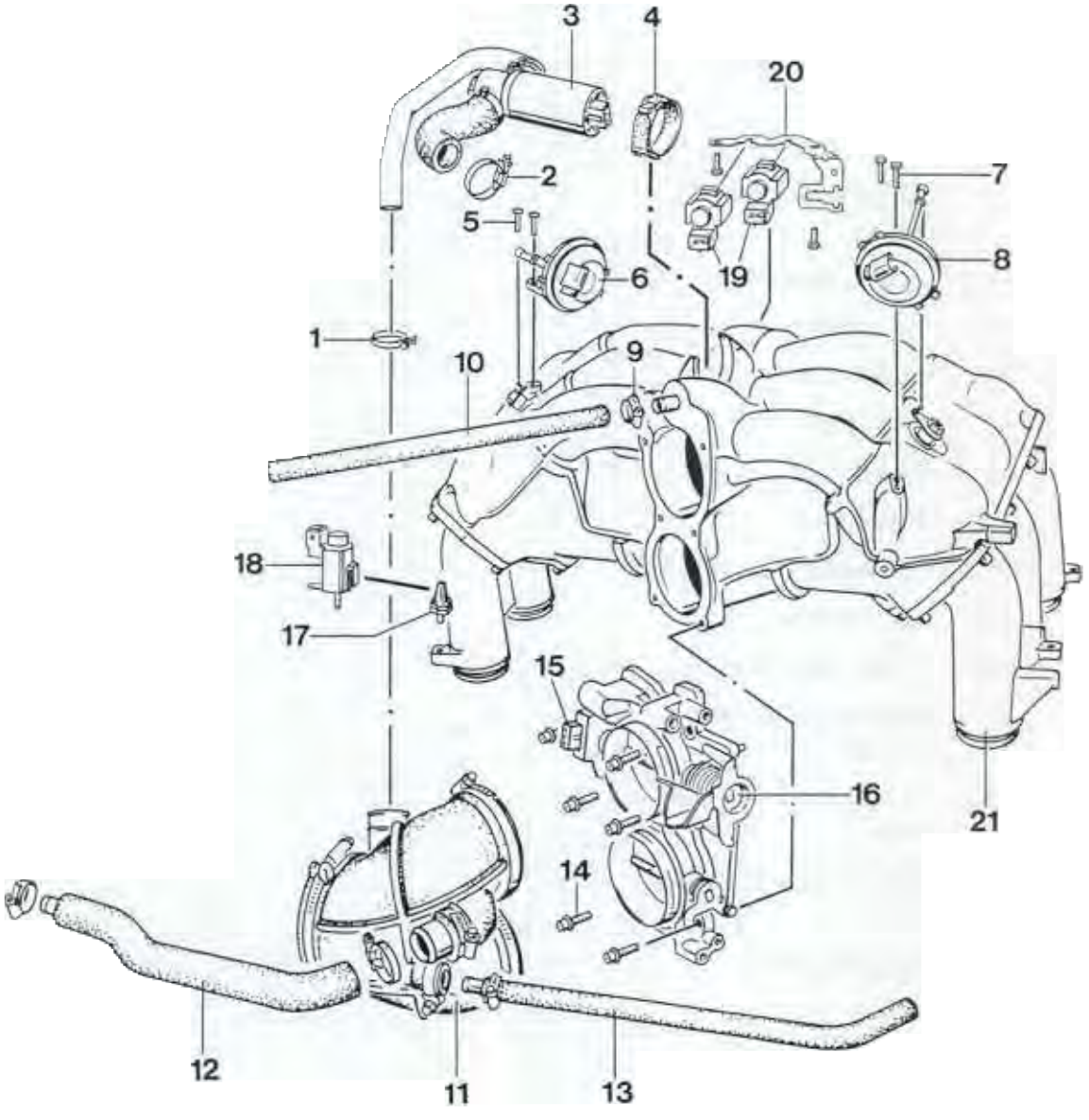

No.	Designation	Qty.	Note: Removal	Installation
1	Hose clamp	1		
2	Hose clamp	1		
3	Idle speed control	1		
4	Rubber shroud	1		
5	Countersunk screw M 5 x 16	2		tightening torque 5.6 Nm (4.1 ftlb)
6	Vacuum capsule	1		
7	Countersunk screw M 5 x 16	2		tightening torque 5.6 Nm (4.1 ftlb)
8	Vacuum capsule	1		
9	Hose clamp	1		
10	Molded hose	1		
11	Hose clamp	1		
12	Molded hose	1		
13	Molded hose	1		
14	Combination Allen screw	6		
15	Potentiometer	1		
16	Throttle valve assembly	1		
17	Guide pin for air filter housing	2		
18	Solenoid valves for slide valves	2		
19	Solenoid valve for tuning flap	1		
20	Induction system	1		Degrease seal surface of throttle valve flange and apply Loctite 574 sealant with velour roller.

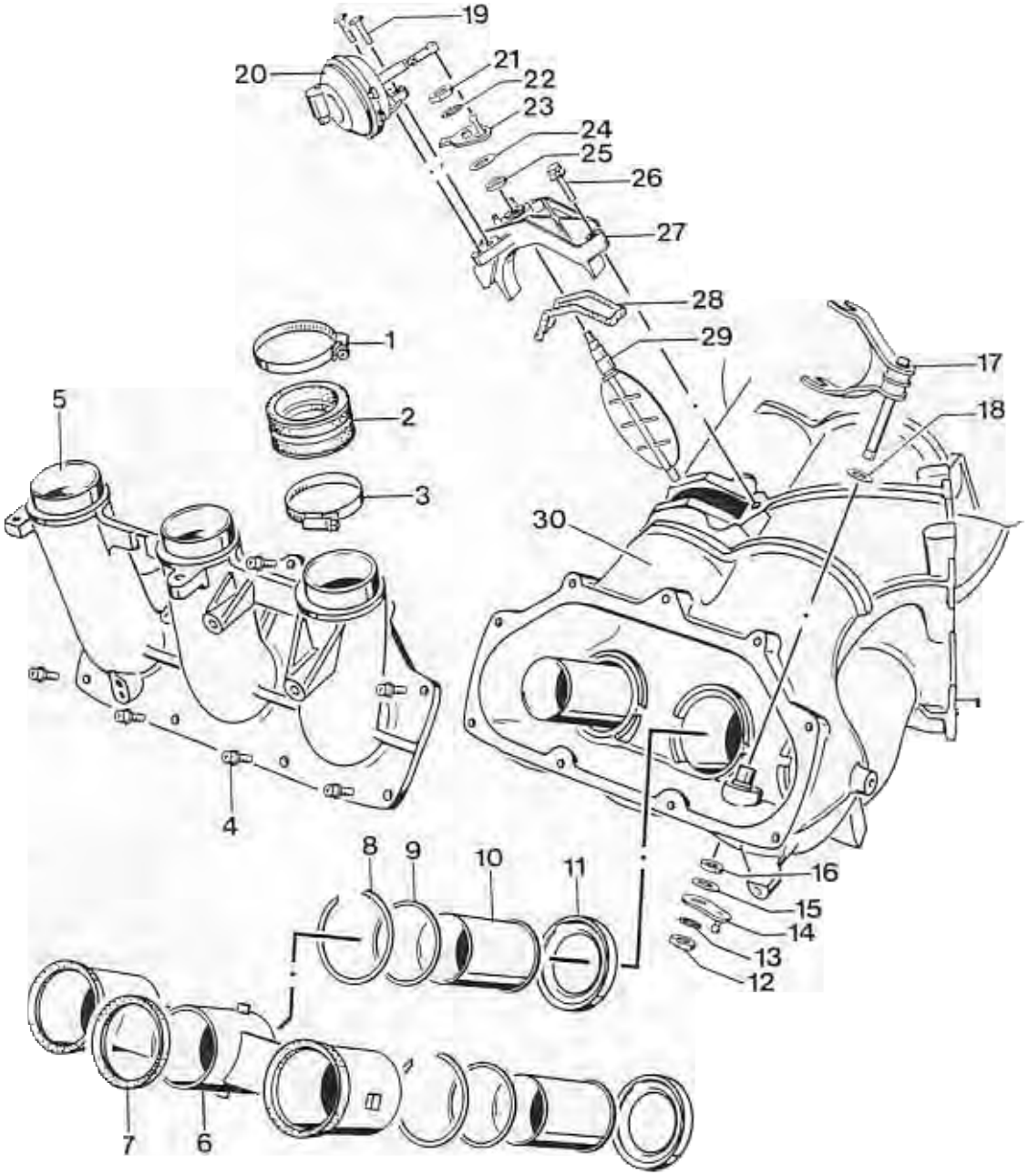
19
20
21
22
23
24
25
26
27
28
29
1
2
3
5
4
30
17
18
8
9
10
11
16
15
14
13
12
7
6

2210-24

No.	Designation	Qty.	Removal / Installation Note:
1	Hose clamp	6	
2	Rubber sleeve	6	Inspect for damage.
3	Hose clamp	6	
4	Combination Allen screw M 6 x 20	9	tightening torque 9.7 Nm (7.2 ftlb), tighten screws working crosswise. Degrease seal surface and apply Loctite 574 sealant with velour roller.
5	Intake pipe, lower section	2	
6	Slide valve	2	Oil bore slightly. Install in correct position with rounded central platform facing center of intake pipe.
7	Seal ring	6	
8	Snap ring	6	
9	Cup spring	6	Install with flat side towards upper section of intake pipe.
10	Pipe nozzle	6	
11	Seat ring	6	
12	Hexagonal nut	2	tightening torque 7 Nm (5.2 ftlb), hold wrench against forked rocker shaft when tightening.
13	Lock washer	2	
14	Lever	2	
15	Shim 8.1 x 14.5 x 0.5	2	
16	Shaft seal ring G8 x 12 x 9	2	Replace. Closed side must face intake pipe, i.e. open side is visible.

No.	Designation	Qty.	Note: Removal	Installation
17	Forked rocker for slide valve.	2		Observe marking. Rockers are marked "R" for right and "L" for left.
18	Shim 8.1 x 14.5 x 0.5	2		
19	Countersunk screw M 5 x 16	2		Tightening torque 5.6 Nm (4.1 ftlb)
20	Vacuum capsule	1		
21	Hexagonal nut	1		tightening torque 7 Nm (5.2 ftlb)
22	Lock washer 8.4	1		
23	Lever for tuning flap	1		
24	Shim 8 x 14 x 1	1		
25	Shaft seal ring G8 x 12 x 3	1		Replace. Closed side must face intake pipe, i.e. open side is visible.
26	Hex head screw M 6 x 25	2		
27	Tuning flap housing	1		
28	Seal ring	1		
29	Tuning flap	1		
30	Intake pipe, upper section	1		Degrease seal surface.

Note

All moving parts must be oiled slightly for installation.

Installation instructions

Install shaft seal ring for forked rocker of slide valve.

Installation

The closed side must face the intake pipe, i.e. the open side must be visible.
Ensure that the seal ring is pressed in to the correct depth.

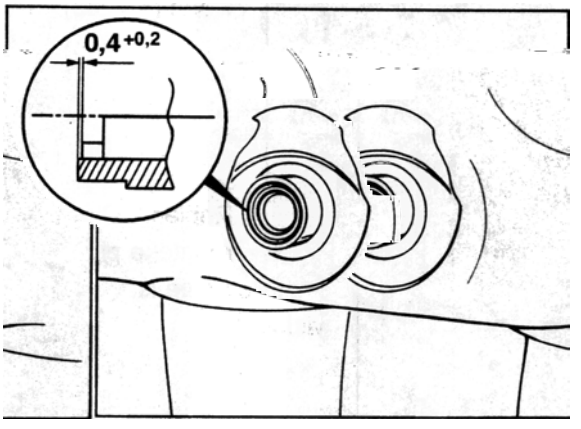

2223-24

Hook forked rocker onto slide valve.

Installation

In order to prevent the slide valve from becoming unhooked, the forked rocker must be installed with the intake pipe upper section turned over. The forked rockers are marked "R" and "L". The intake pipe must not be turned over until the upper section has been bolted to the lower section (installation position).

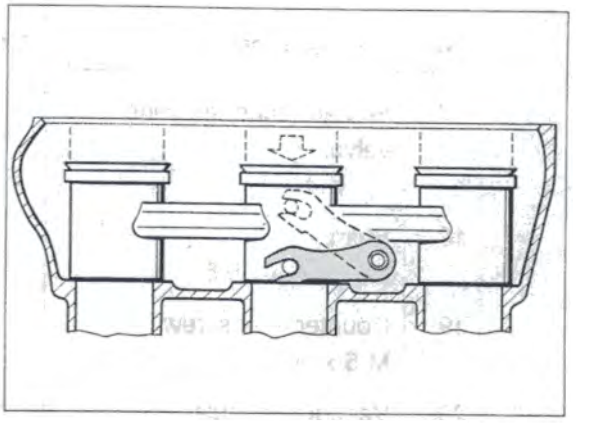

2224-24

The illustration shows the cutout in the turned over intake pipe upper section for cylinders 1 - 3.

Removing and installing vacuum reservoir

Note

The vacuum reservoir is below the rear left wheel housing, near to the carbon canister.

Installation instructions

Install connection in correct position on vacuum reservoir. Install vacuum hose without stress. Tighten fastening screw to 3 Nm (2.2 ftlb).

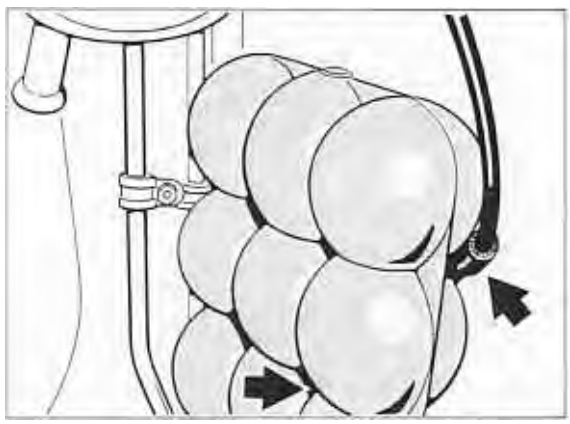

2220-24

Disconnect air filter housing from air mass sensor.

Disconnect air filter housing from air mass sensor in engine compartment. To do so, turn air mass sensor in direction of arrow (towards front of vehicle) to unhook bayonet mounting. For installation, apply a thin layer of assembly lubricant to rubber seal.

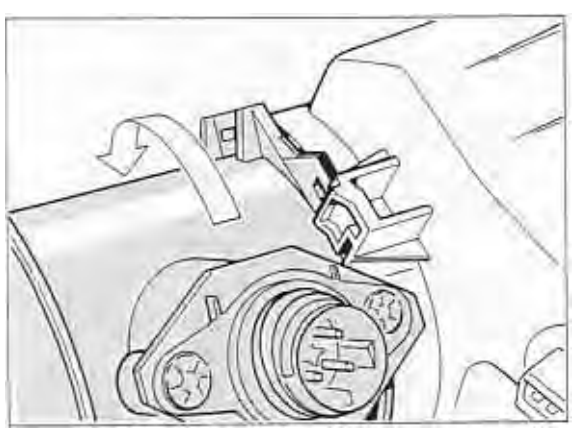

2221-24

24 00 01 Fuel system - checking vacuum system for leakage

General

If there are leakages in the vacuum system, the variable induction system may not operate correctly and there may be a reduction in engine power output.

Leakage test

1. Run engine until operating temperature (70...90°C oil temperature) is reached.

2. Remove vacuum hose from solenoid valve (fresh air /engine air) switchover flap.
   Attach special tool 9160/1 to open end of hose (on vehicles not equipped with a switchover flap, the plugged hose end is under the intake system).

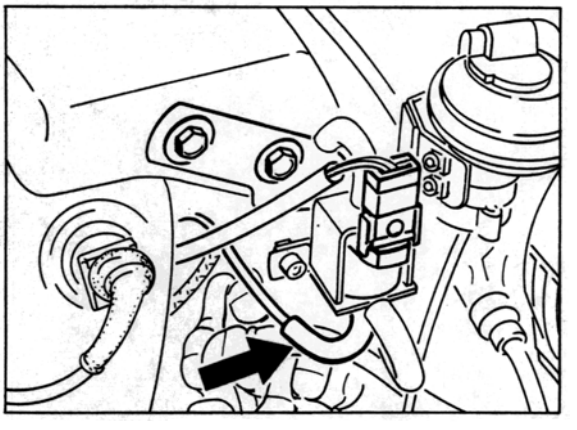

2027-10

3. Start engine. Hold engine speed at 2500 rpm for about 10 sec. to build up vacuum.

4. Turn off ignition.

5. Test functions of slide valve actuator.
   A second person is needed for this work.
   Turn on ignition.
   As you turn the ignition on, the second person must observe the movements of the two levers on the intake pipe.
   If the levers are moved as the ignition is switched on, the slide valves and vacuum capsules will operate correctly.
   If the levers do not move, the vacuum system, the vacuum capsules or the slide valves may be faulty.

6. Pressure maintenance test on vacuum system.
   The ignition is still switched on.
   After the completion of items 3 to 5, the vacuum in the vacuum system must still be at least 0.64 bar. The pressure drop over about 3 minutes must be no more than 0.02 bar.
   If the pressure drop is higher, the entire system must be checked for mechanical faults.

7. After the test has been completed, reconnect vacuum hose to solenoid valve.

24 Hose connection schematic

911 Carrera RS engine M 64/20

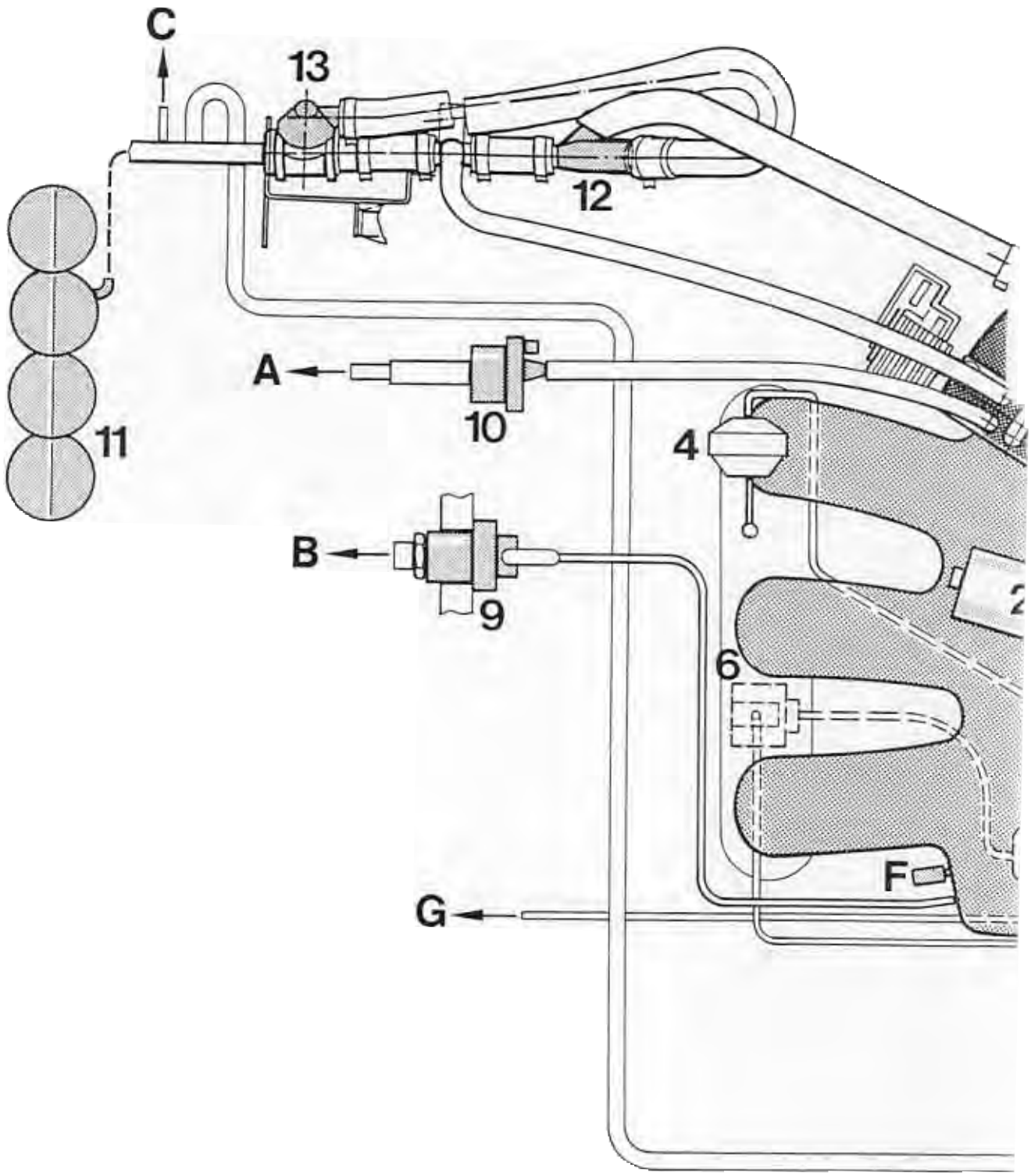

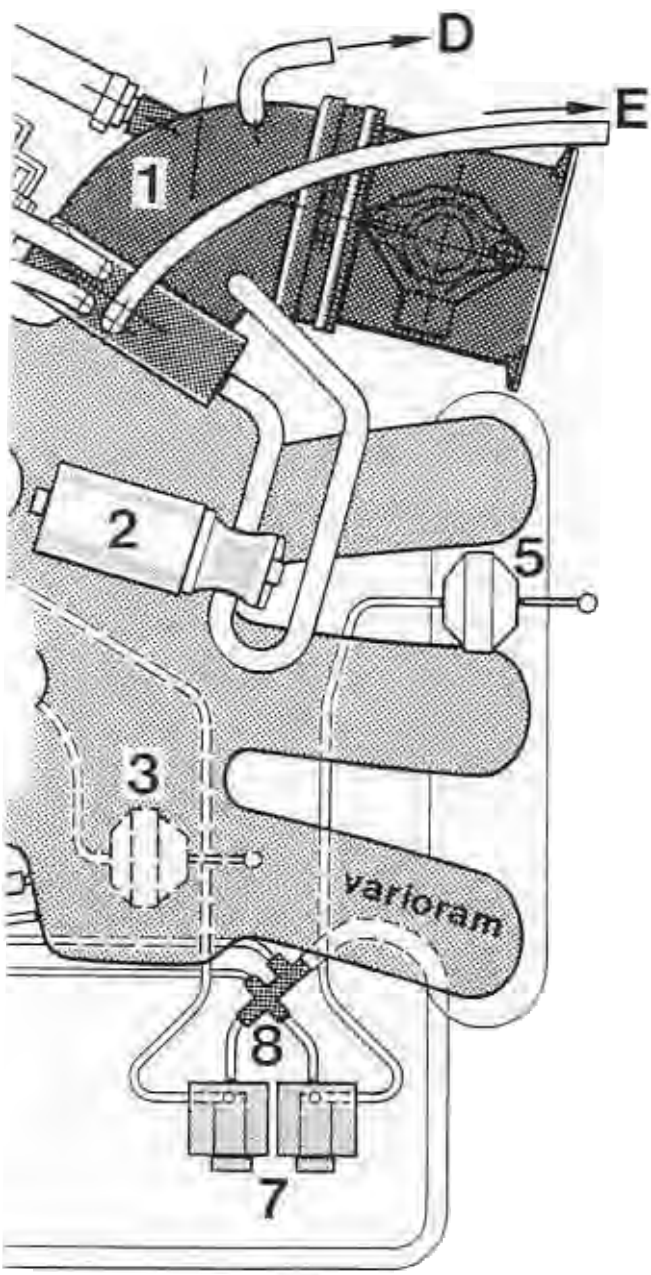

2211-24

Designation

1 = Throttle valve assembly with hot film air flow sensor

2 = Idle speed control

3 = Vacuum capsule for tuning flap

4 = Vacuum capsule for left slide valve

5 = Vacuum capsule for right slide valve

6 = Solenoid switchover valve for tuning flap

7 = Solenoid switchover valves for left and right slide valves

8 = Distributor

9 = Fuel pressure regulator

10 = Tank ventilation valve

11 = Vacuum reservoir for variable induction system

12 = Jet pump with throttle

13 = Check valve

A → to carbon canister

B → Fuel return line

C → Vacuum line for heater / A/C unit bypass valve actuator

D → to oil tank

E → to oil tank

F → Emission test connection

G → Vacuum line for fresh air / engine air switchover flap

911 Carrera, M 64/21-24 engine
Model year 96

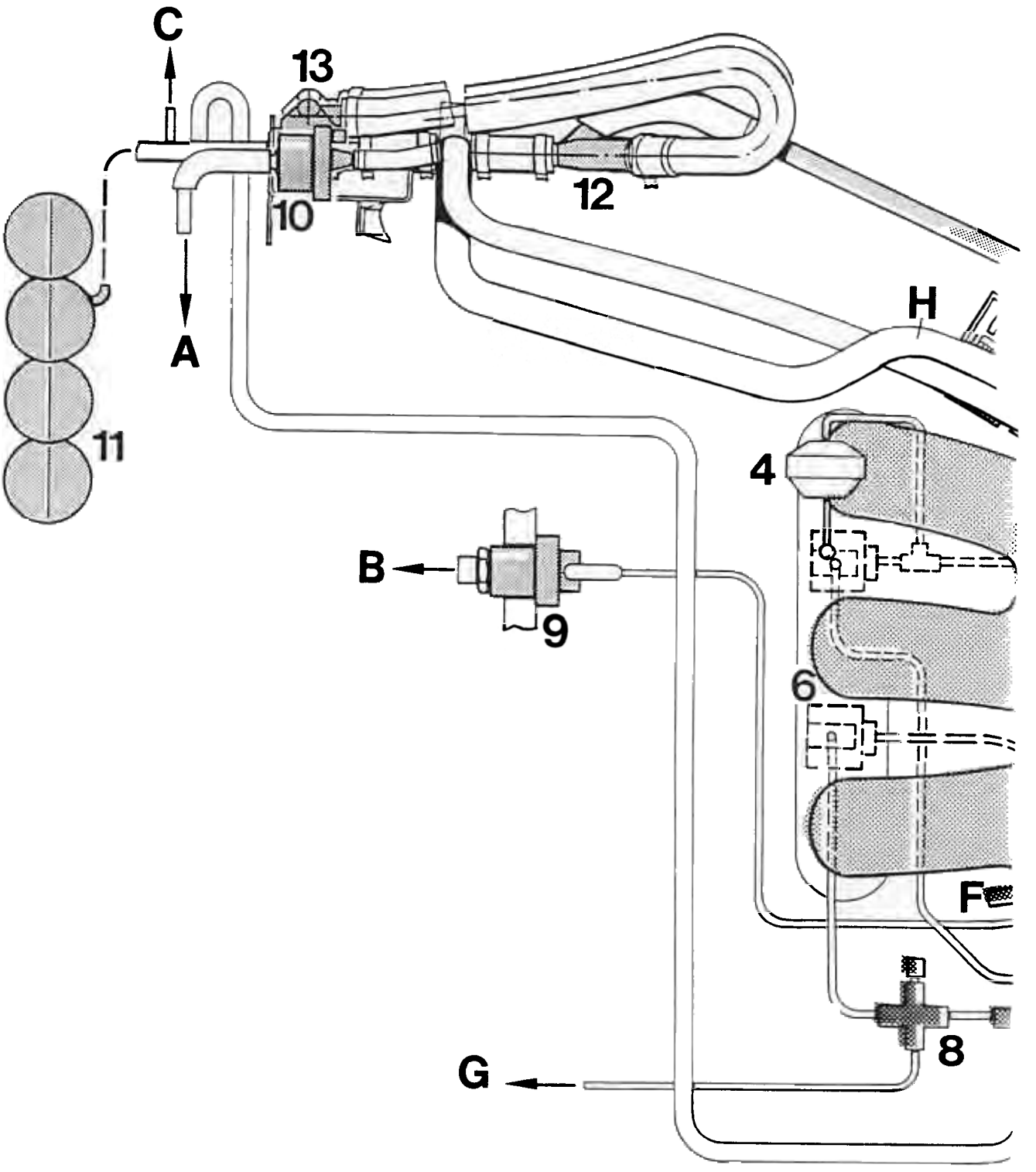

Printed in Germany - 16, 1995

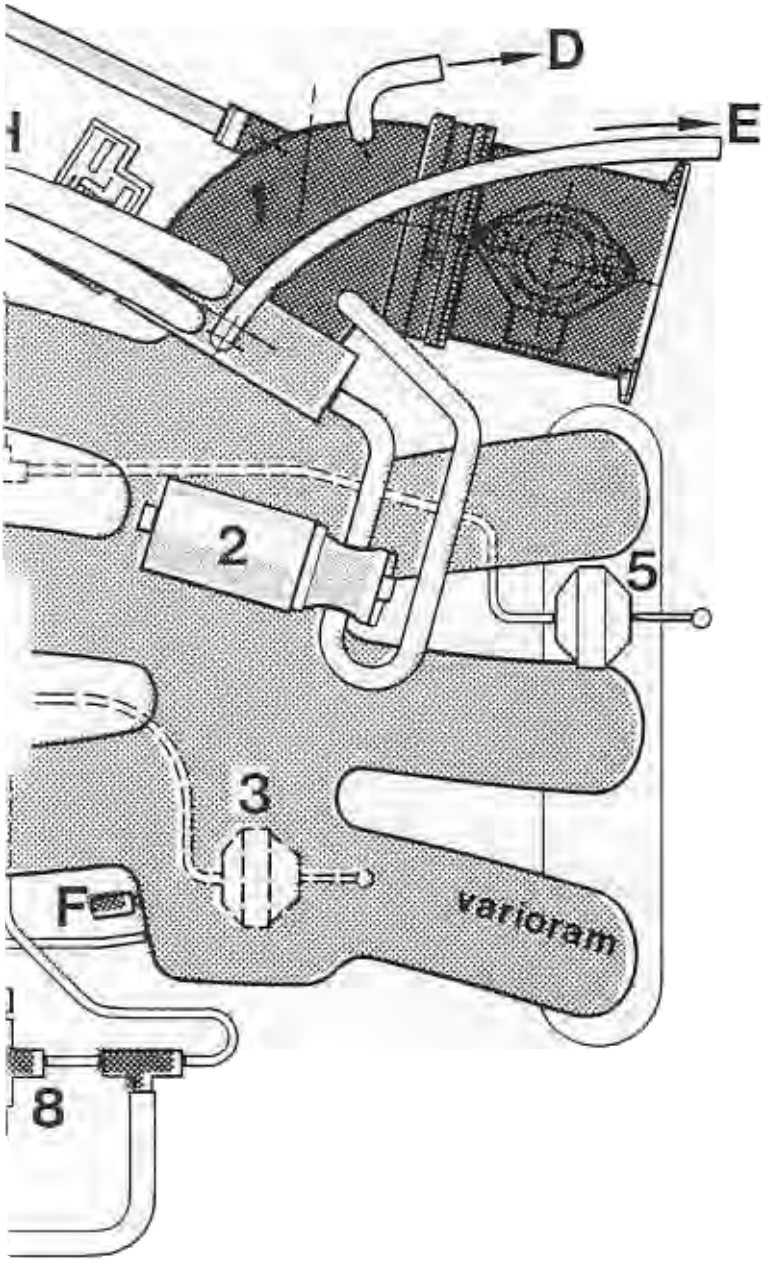

	Designation
1 =	Throttle body with hot-film mass air flow sensor
2 =	Idle speed control
3 =	Vacuum modulator for resonance flap
4 =	Vacuum modulator for left selector sleeve
5 =	Vacuum mod. for right selector sleeve
6 =	Electronic switch-over valve for resonance flap
7 =	Electronic switch-over valve for LH/RH resonance flap
8 =	Branch piece
9 =	Fuel pressure regulator
10 =	Tank vent
11 =	Vacuum tank for switching / intake unit
12 =	Twin-type sucking jet pump with throttle (single-type pump on all-wheel vehicles)
13 =	Check valve
A ->	to active-carbon canister
B ->	Fuel return line
C ->	Vacuum line for control of recirculating-air flap heater and air conditioner
D ->	to oil tank
E ->	to oil tank
F ->	Connector for special exhaust emission check
G ->	Vacuum line for control of recirculating-air flap (fresh air / engine air)
H ->	Vacuum line to twin-type sucking jet pump (on all-wheel vehicles, bore of throttle body is sealed).

24 70 19 Removing and installing DME control unit

Removal

1. Remove driver's seat.

2. Remove shear bolts using a cross cut chisel and remove cover (access protection).

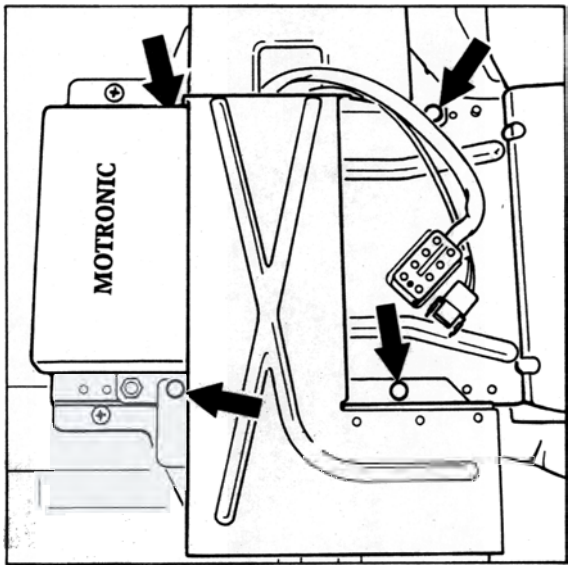

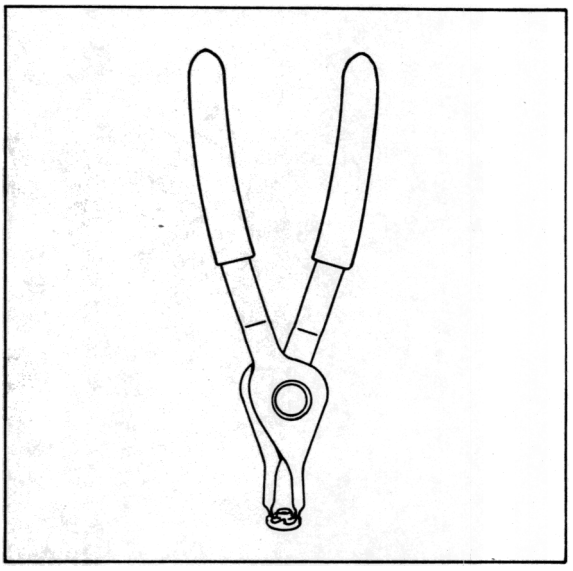

2219-24

Installation

Break off new M 6 x 13 shear bolts, part no. 999 074 051 02 using an E6 Torx socket wrench.

Removing and installing control unit on RS vehicles

Removal

Loosen flanged nut using a cross cut chisel.

Installation

Tighten new M5 flanged nut with stop teeth (part no. 999 507 472 02) using snap ring pliers, e.g. Hazet 4843a-12.

24 46 19 Removing and installing intake distributor

Engine installed - M64/21-24 engine

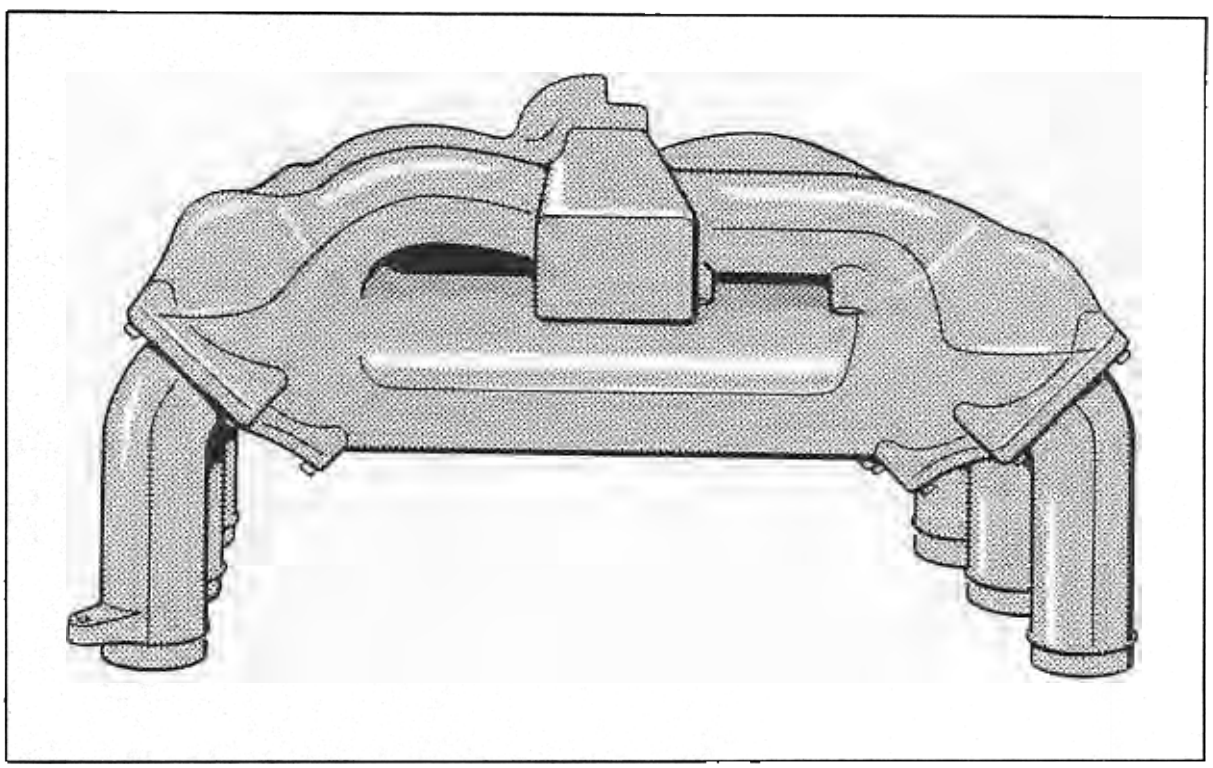

Removing and installing intake distributor

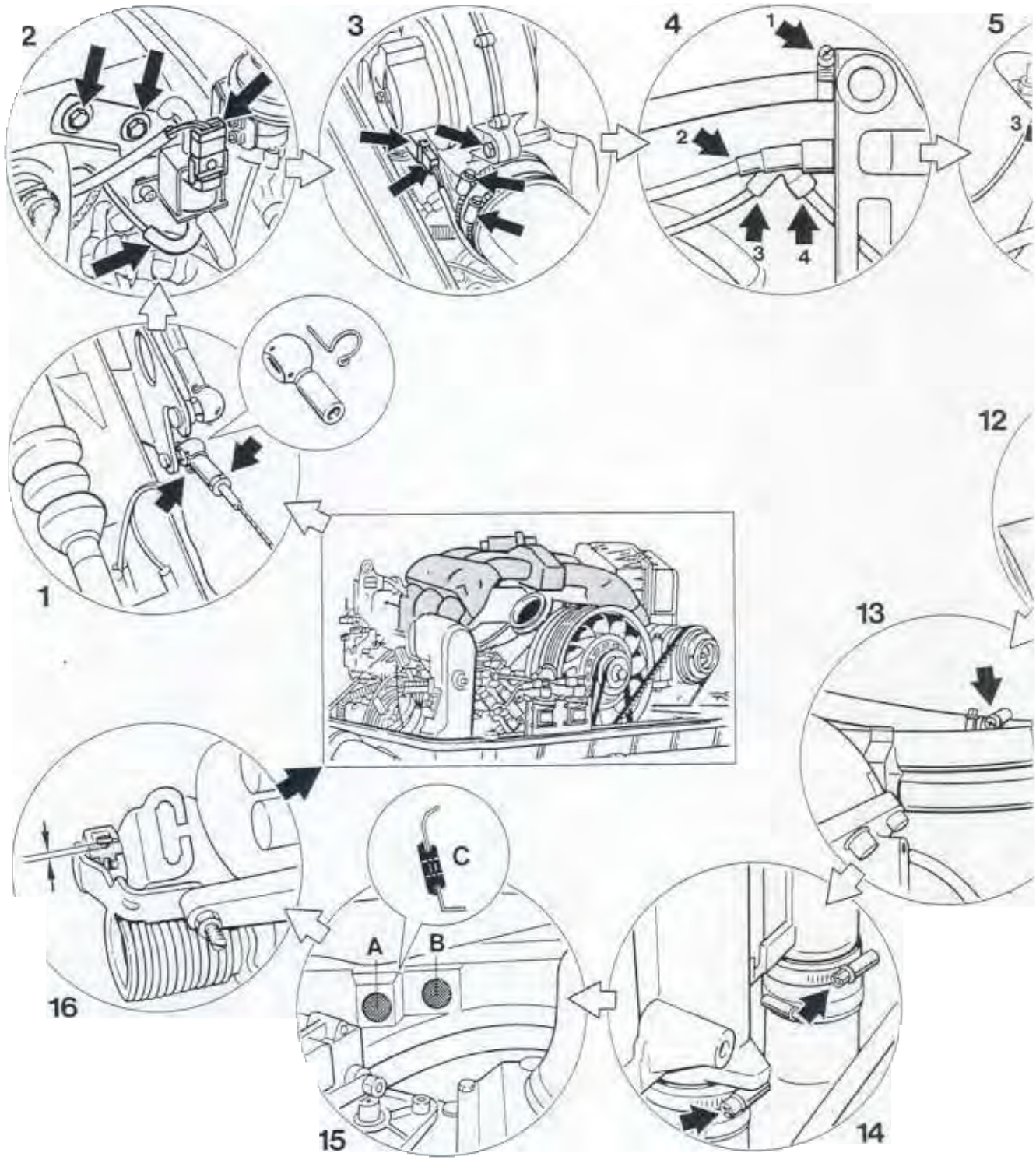

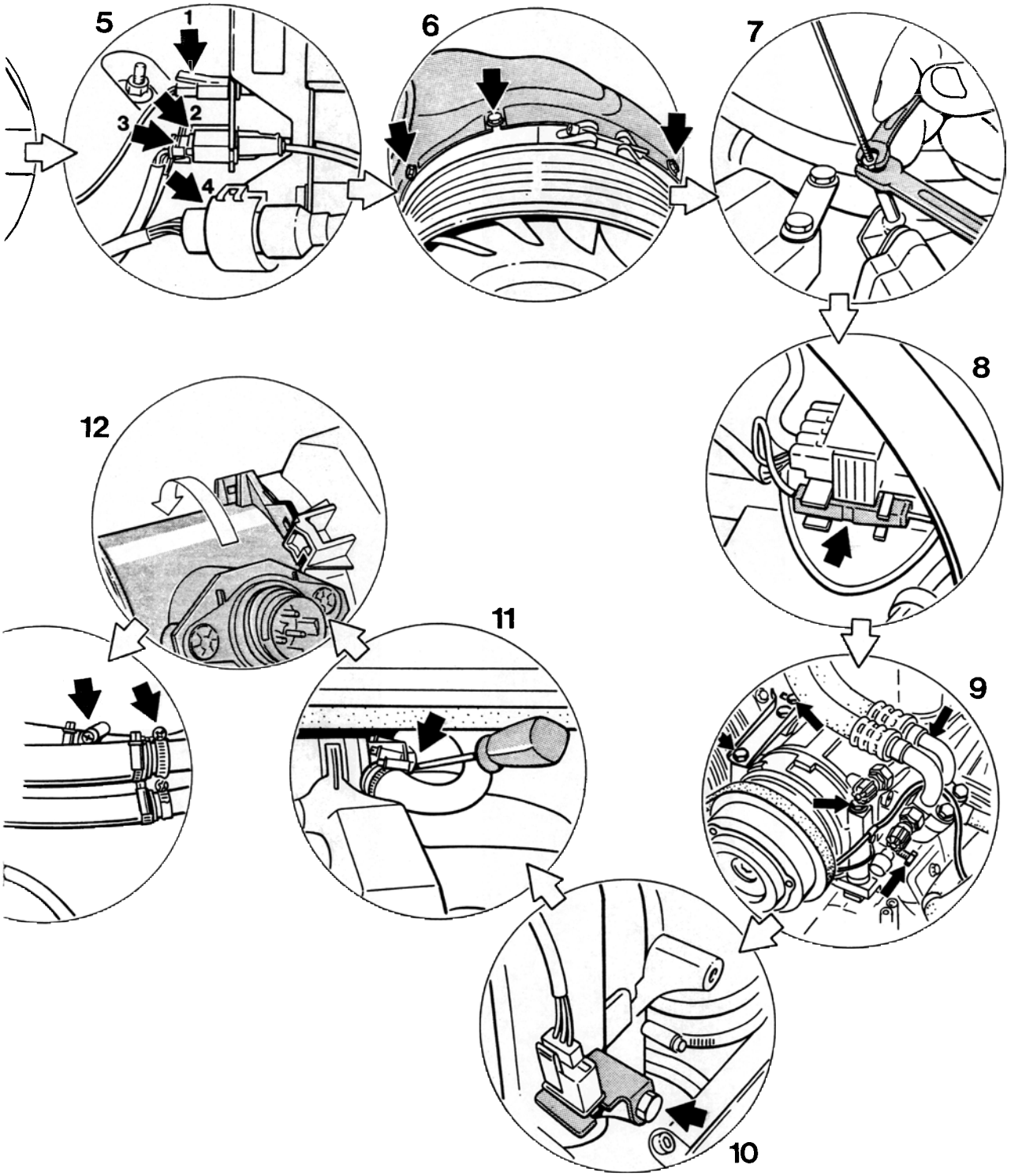

2351-24

Removing and installing intake distributor

Removing intake distributor

No.	Operation	Instructions
1	Disconnect accelerator cable	Remove floor mat and pedal floor board. Separate accelerator pedal from push rod. Slacken lock nut on ball socket. Unhook securing bracket on ball socket. Remove ball socket and lock nut from accelerator cable; count and note down the number of revolutions. Remove engine and transmission undertray and extract accelerator cable from guide.
2	Remove fresh air blower	Loosen vacuum hose, plug connection and fastening screws and remove fresh air blower.
3	Remove rear heater blower	Loosen hose clamps, tie-wraps, plug connection and fastening screws (2 pcs.). Remove heater blower from bracket by pulling it backwards.
4	Remove vacuum hoses	Disconnect the following hoses in the left front corner of the engine compartment: 1 - to active-carbon canister 2 - to vacuum tank 3 - to recirculating-air flap heater and air conditioner 4 - to electronic switch-over valves of resonance flap and to selector sleeves in intake distributor.
5	Separate plug connections	Disconnect the following lines in the left front corner of the engine compartment: 1 - to reference mark sender, black connector 2 - to temperature sensor (cyl. 3), white connector 3 - to knock sensor, green connector 4 - plug connection cruise control
6	Remove intake cowl from cooling fan	Slacken fastening screws (M6x15) and remove intake cowl.

Printed in Germany - 16, 1995

No.	Operation	Instructions
7	Disconnect tie rod at cruise control actuator	On vehicles with cruise control (M454) the tie rod must be disconnected as well. Hold the suction pipes of cyl. 1-3 from the left and the right and slacken lock nut (A/F5.5). Use an A/F8 wrench for locking. (For better representation: chart shows engine removed).
8	Separate electrical plug connections	Unclip connectors from connector take-up plate. Separate plug connection.
9	Remove A/C compressor	Slacken lock nut and unscrew setting bolt. Unscrew four fastening screws. Remove square nuts. Put compressor aside with lines sealed. Use appropriate support.
10	Separate plug connection knock sensor	Press lock bracket and unplug connector. Slacken hexagon-head screw and remove entire lower part of connector including support.
11	Loosen hose clamp ahead of mass air flow sensor/intake cowl connection	Use cross-head screw driver to loosen hose clamp, e.g. Wiha type, order no. 153-1 (350 mm long).
12	Separate mass air flow sensor from air cleaner housing	Due to the limited space available, the mass air flow sensor and the air cleaner housing must be separated in the engine compartment. To do so, turn mass air flow sensor in direction of arrow (direction of travel) while locking the air cleaner housing (bayonet lock).
13	Disconnect oil hoses	Slacken and remove hose clamps of upper oil hoses. Unclip oil hoses from support.
14	Remove intake distributor	Slacken upper hose clamps of intake pipes. Lift intake system briefly and seal bores on lower flange using appropriate plugs immediately. Lift out intake system. At the same time, remove accelerator cable from front engine paneling.

Installing intake disctributor

No.	Operation	Instructions
15	Install accelerator cable.	Fit rubber sleeve (C) into take-up bore of accelerator cable; observe correct position. Bore (A) for accelerator cable for Tiptronic transmission. Bore (B) for accelerator cable for manual transmission. Remove plugs from intake channels and check channels for foreign substances. Install intake system with pre-assembled accelerator cable.
16	Adjust operating rod for cruise control	Prerequisite: Throttle fully closed and accelerator cable load-free. Slacken lock nut on operating rod (wrench size 5.5 mm). Adjust operating rod; in off-position, the distance between the take-up part of the operating rod and the upper stopper must be 1 mm. Re-lock hexagon nut.

24 Checking components of injection system for leaks

1. Remove air cleaner cap and air cleaner element.

2. Remove hose clamp from mass air flow sensor using cross-head screw driver, e.g. Wiha type, order no. 153-1 (350 mm long).

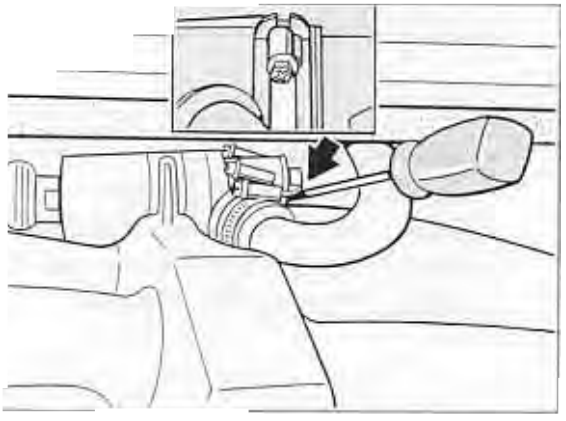

:354-24

3. Due to the limited space available, the mass air flow sensor and the air filter housing must be separated in the engine compartment. To do so, turn mass air flow sensor in direction of arrow (direction of travel) while locking the air cleaner housing (bayonet lock).

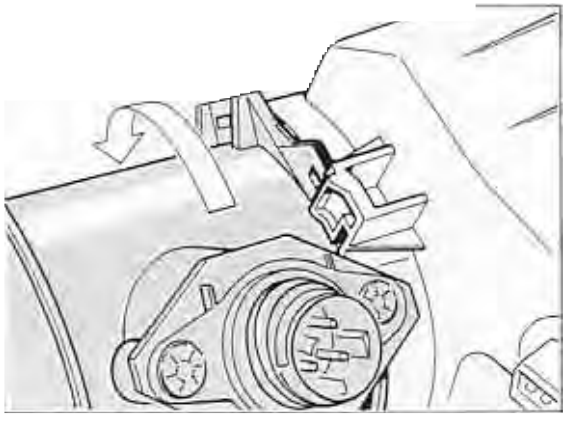

2221-24

4. Lever off snap ring and remove protective grating.

5. Fix sealing plate 9264/1 to hot-film mass air flow sensor using M4x40 screws and washers.

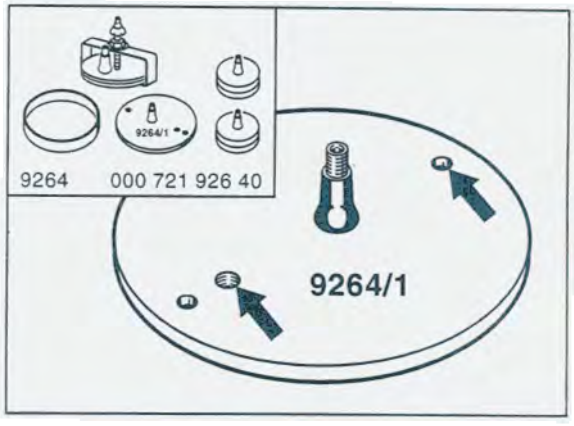

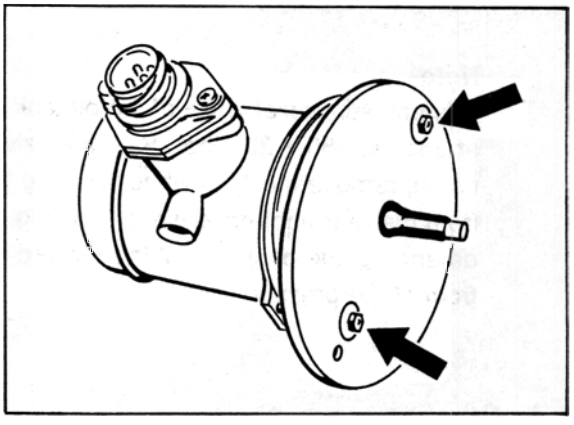

Check the position of the hot-film mass air flow sensor on the sealing plate before tightening the screws; no light gap must be detectable during visual inspection.

6. Generate a pressure of approx. 0.5 bar. With this pressure generated, a clearly audible blowing sound indicates major leaks whereas minor leaks can be made visible using a leak detection spray.

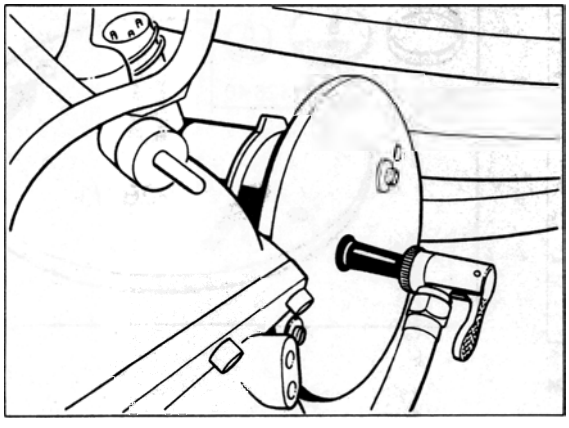

2352-24

Note

The pressure relief valve of the oil tank opens at approx. 180 ± 20 mbar. Seal the valve; to do so, remove the front wheel housing liner from the rear right-hand wheel housing. Use an appropriate plug to seal the molded hose from of the pressure relief valve.

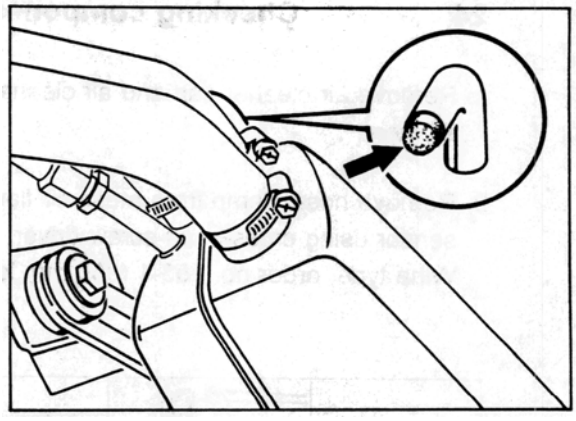

2060-20

Remove the plug after completing the leak test. Before attaching the mass air flow sensor to the intake system, assemble the mass air flow sensor and the air cleaner housing in the engine compartment.

26 01 55 Replacing exhaust system

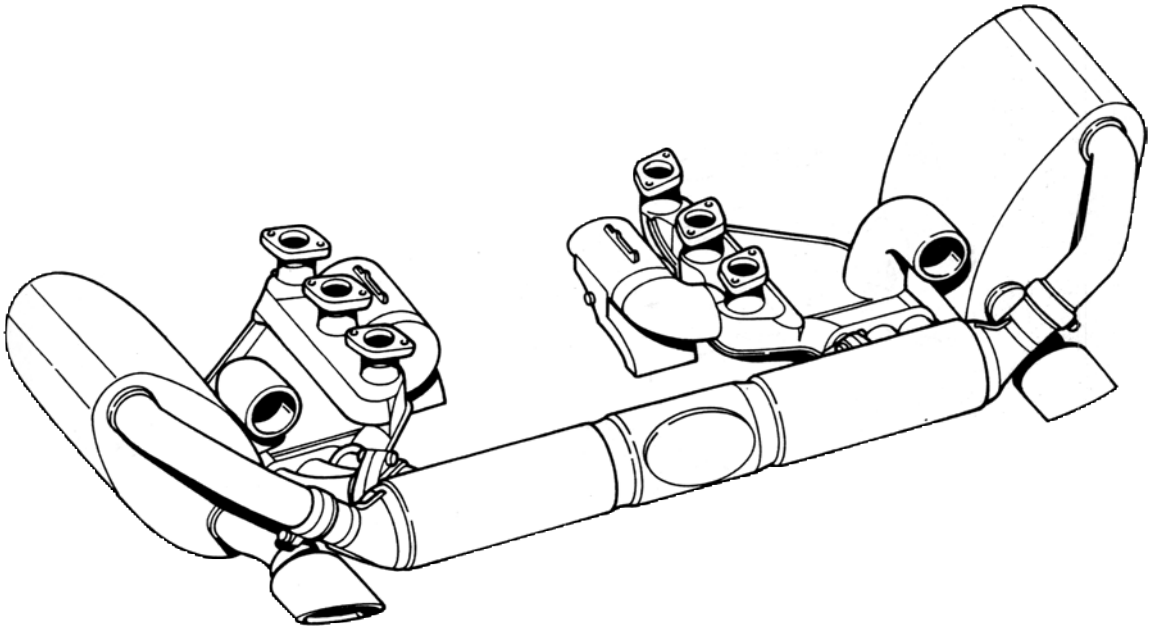

1777 - 26

26 01 55 Replacing exhaust system

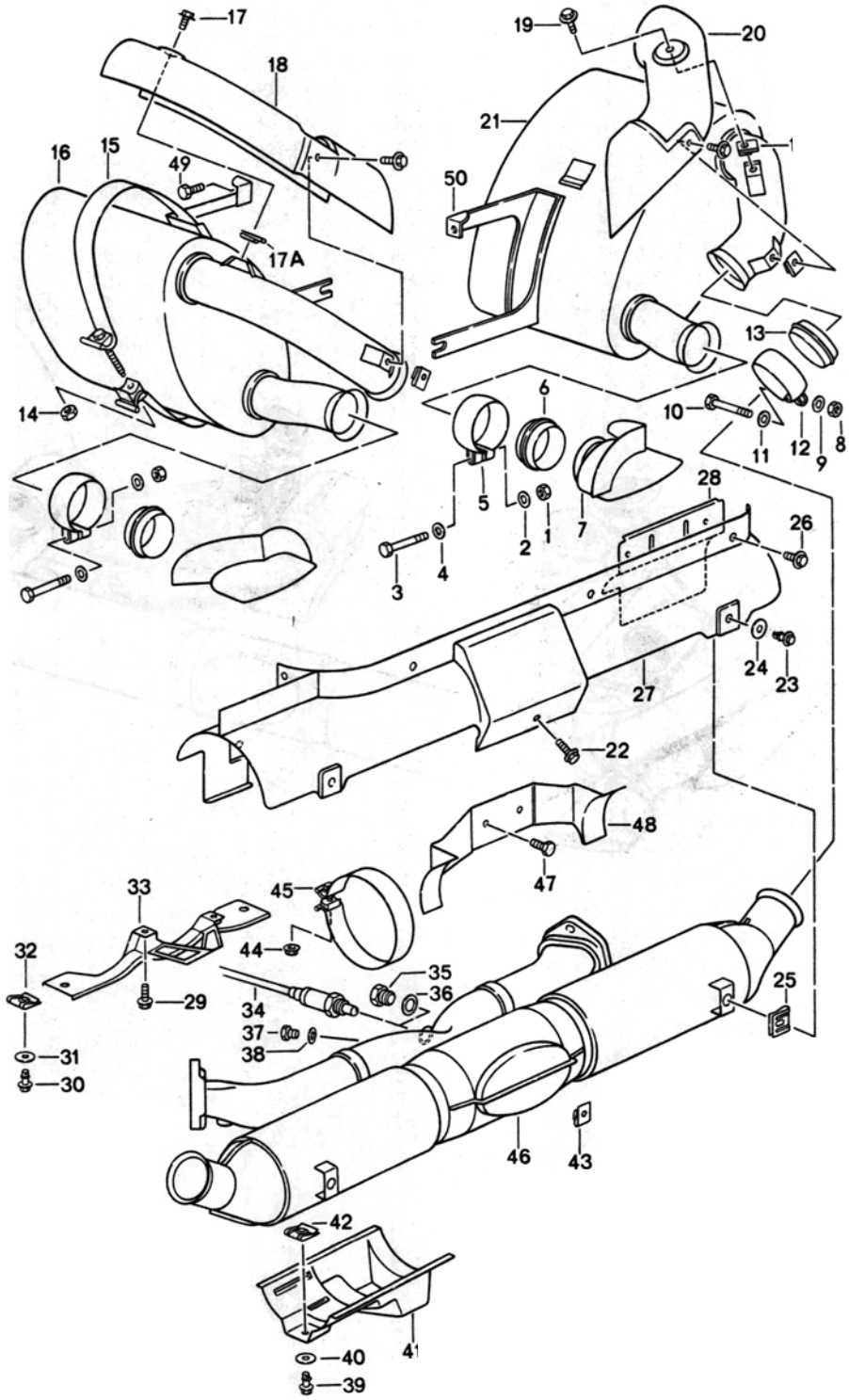

No.	Designation	Qty.	Note: Removal	Installation
1	Lock nut	2		Check, replace if required
2	Washer 8.4 x 17 x 3.1	2		
3	Hexagon head bolt	2		
4	Washer 8.4 x 17 x 3.1	2		
5	Clamp	2		
6	Seal	2		Align correctly
7	Tailpipe	2		Align
8	Lock nut	2		
9	Washer	2		
10	Hexagon head bolt M 8 x 60	2		
11	Washer	2		Align correctly
12	Clamp	2		
13	Seal	2		Align
14	Lock nut	2		Check, replace if required
15	Tightening strap	2		
16	Muffler	2	Lift out and disengage	Engage, check for correct positioning and check visually
17	Combination screw	2		
17a	M 6 nut retainer	2		
18	Heat shield	1		
19	Combination screw	2		
19a	Nut retainer	2		
20	Heat shield	1		
21	Muffler	1		
22	Combination screw	1		
23	Plug stud M 6 x 12	4		
24	Washer	4		

No.	Designation	Qty.	Note: Removal	Installation
25	Bracket	4		
26	Combination screw M 6 x 14	5		
27	Heat shield	1		
28	Heat shield	1		
29	Combination screw M 6 x 14	2		
30	Plug stud	2		
31	Washer	2		
32	Bracket	1		
33	Bracket for lock plug	1		
34	Oxygen sensor	1		
35	Plug M 18 x 1.5	1		
36	Seal	1		Replace
37	Plug M 8 x 1	1		
38	Seal	1		Replace
39	Lock plug	1		
40	Washer	1		
41	Catalytic converter cover (only for Japan versions)	1		
42	Bracket	1		
43	Nut retainer	1		
44	Lock nut	2		Check, replace if required
45	Tightening strap	2		
46	Catalytic converter	1		
47	Combination screw	2		
48	Bracket	1		
49	Combination screw M 8 x 20	2		
50	Bracket for muffler	2		Check

:7 R ım ıd te to

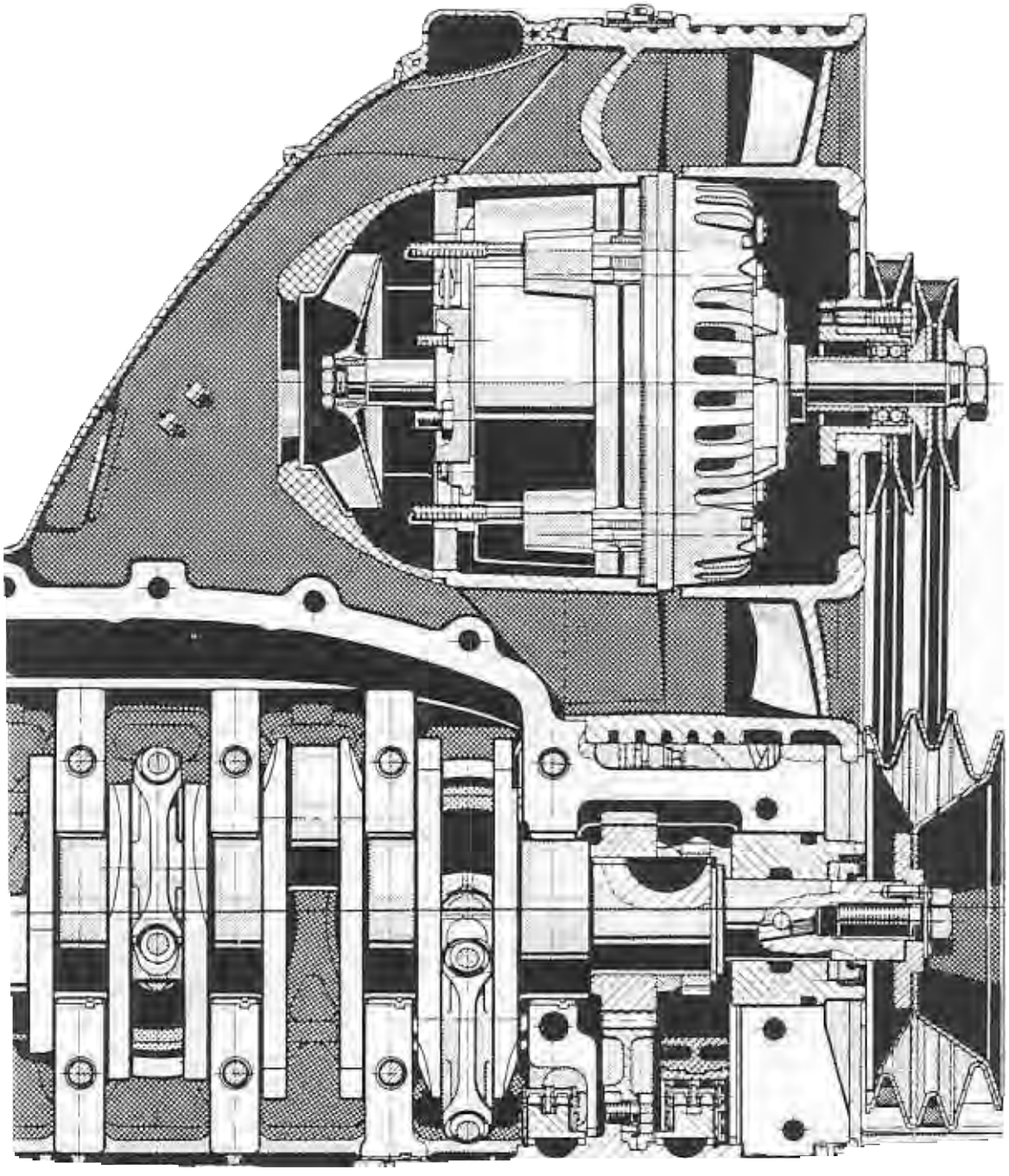

27 22 19 Removing and installing alternator

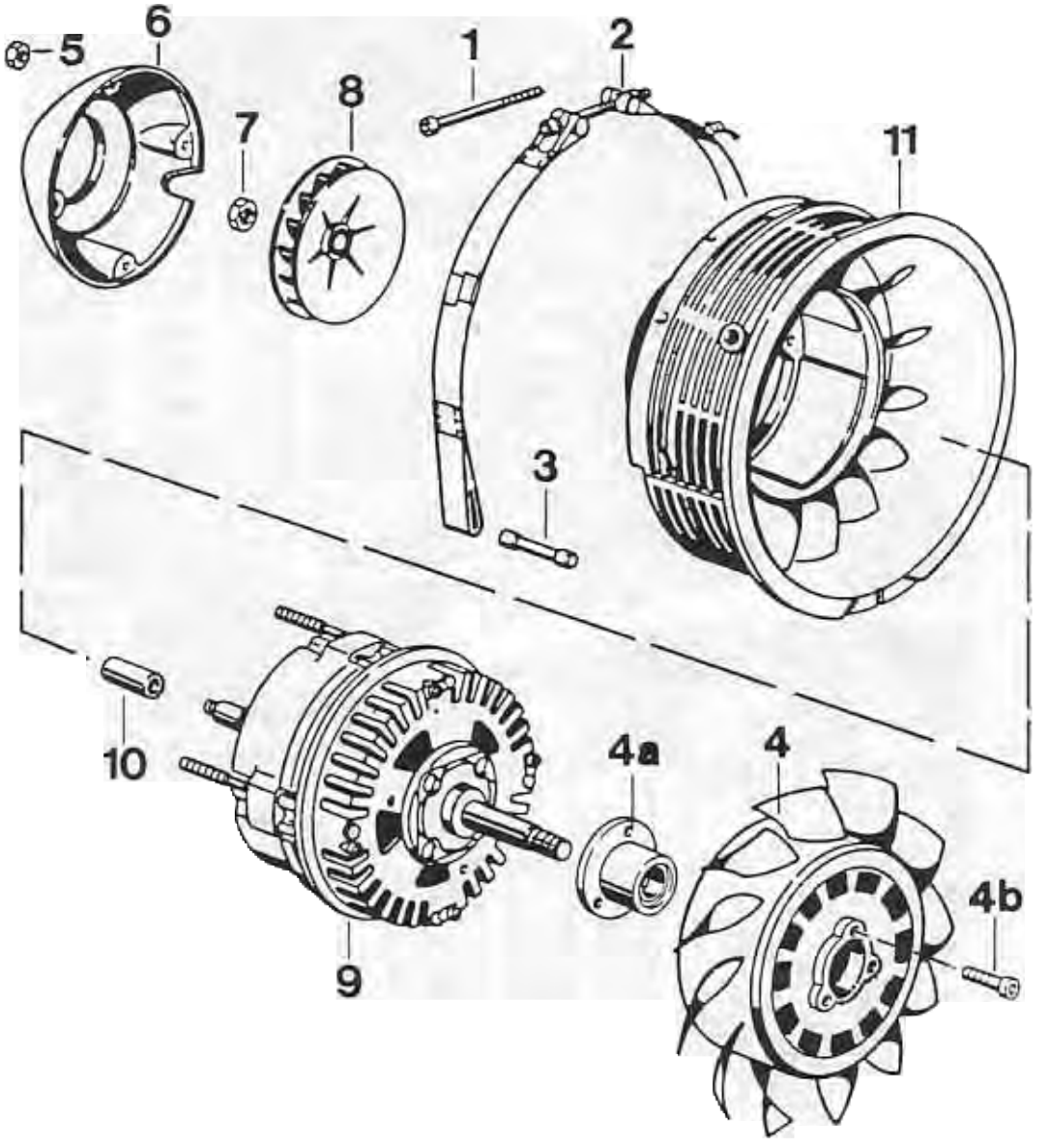

1404-27

27 22 19 Removing and installing alternator

No.	Designation	Qty.	Note: Removal	Installation
1	Pan-head screw M 8 x 55	1		Tightening torque 8 Nm (6 ftlb.)
2	Restraining strap	1		Observe correct installation position
3	Pin	2		
4	Fan wheel	1	Pull off	
4a	Hub with bearing	1		Heat fan wheel slightly
4b	Pan-head screw M6 x 30	3		
5	Fastening nut	4		
6	Air guide cowl	1		Install in correct position
7	Hexagon-head nut	1		Apply Loctite 270 to lock. Tightening torque 14 ± 1 Nm (10 ± .7 ftlb.)
8	Fan wheel for alternator cooling	1		
9	Alternator	1		Observe correct installation position
10	Spacer sleeve	1		
11	Cooling fan housing	1		Observe correct installation position

27 22 19 Removing and installing alternator

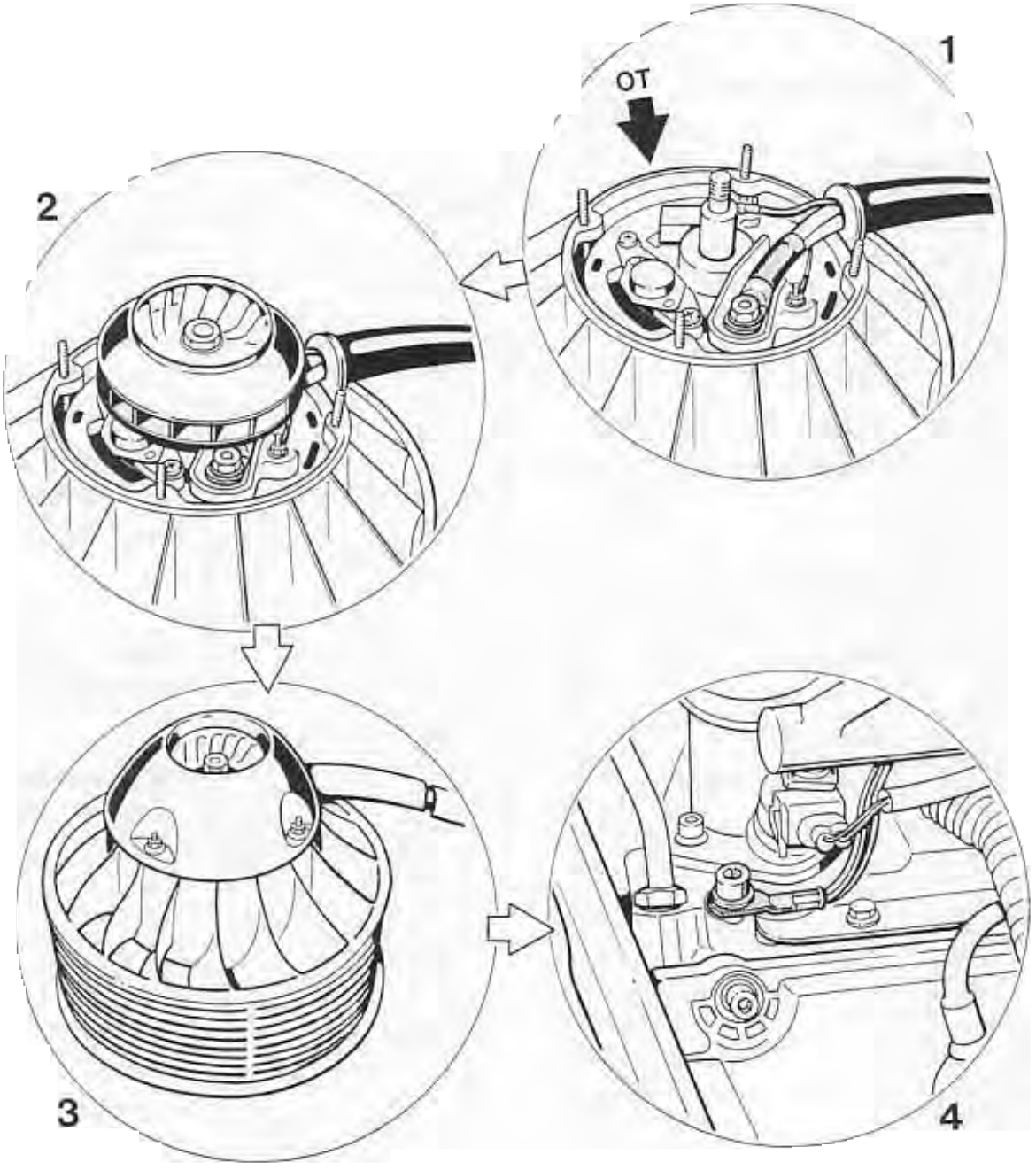

27 22 19 Removing and installing alternator

Removing alternator

No.	Operation	Instructions
	Disconnect battery	Unscrew negative terminal clamp from battery and cover battery
	Take off fan belt	Remove protective cap. Undo hexagon-head nut (24 mm A/F) and use a polygon wrench (from car tool kit) to lock.
	Press off fan wheel	Press fan wheel off the alternator, using puller VW 202 if required. Adapt both puller hooks to fit.

Installing alternator

No.	Operation	Instructions
1	Fit alternator in cooling blower housing	Fit alternator. Make sure terminal B+ and terminal D + are **opposite** the TDC line mark (located on the edge of the cooling blower housing).
2	Fit fan wheel for alternator cooling	Apply a thin coat of **Loctite 270** to alternator shaft threads and tighten hex nut to 14 ± 1 Nm (10 ± .7 ftlb.).
3	Fit air guide cowl	Grease rubber grommet of alternator wiring harness prior to fitting the air guide cowl, e.g. with Contifix tire assembly compound. Press air guide cowl cutout into rubber grommet and tighten air guide cowl with four lock nuts.
4	Reconnect ground cable	Position ground cable on camshaft housing (in area of cylinder No. 3) and tighten to 23 Nm (17 ftlb.).
	Align cooling housing with crankcase	Place cooling blower housing onto crankcase locating pin. Press in cooling blower housing to stop (**in direction of travel**) and tighten restraining strap at the same time.

Note:
If the alternator has been fitted correctly, the wiring harness must exit from the air guide cowl towards the right (seen in direction of travel).

27 78 05 Checking and adjusting alternator and fan wheel drive belt

Caution: The ignition key should always be pulled off during the measurement.

Checking used drive belts:

Use belt tension measuring instrument (Special Tool 9574) to check tension.

A description of how to use the Special Tool is contained in Repair Group 13, page 13 - 30.

Retensioning the belt is only required if the belt tension displayed at the measuring instrument is less than 15 scale increments when the engine is cold and less than 20 scale increments when the engine is hot.

Retensioning the belt

Retension the belt as described in the General Adjustment Notes section.
Before measuring the belt tension, start engine and let engine idle briefly.

Tension:

Cold engine:	15 to 23 scale increments
Engine at operating temperature:	20 to 28 scale increments

Fitting a new belt

When fitting a new belt, be sure to observe the correct **assembly sequence** in order to avoid any loss of belt tension during vehicle operation.

1. Fit new belt. Adjust tension by inserting or removing shims as required.
   Shims are available for belt tensioning in thicknesses of 0.5 mm and 0.7 mm. The 0.7 mm shim is identified by a 2 mm dia. drill hole.

2. Before measuring the belt tension, start engine once more and run engine at idle briefly.

   Tension:
   Cold engine: 23 to 35 scale increments

3. Run engine at idle for approx. 15 minutes or test drive vehicle for approx. 10 miles.
   Check tension.
   Specification: 28 to 40 scale increments
   Retension if required
   Test requirement: Engine at operating temperature

General adjustment notes

Fan wheel and alternator have separate drives.

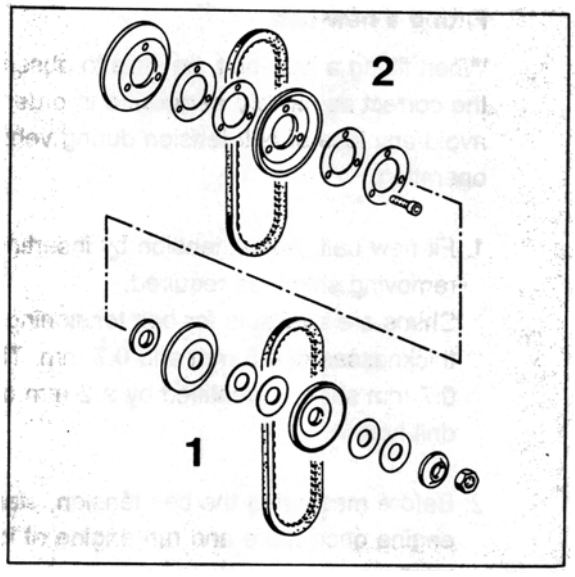

1863-27

1 = Alternator drive components
2 = Fan wheel drive components

Adjusting the V-belts

1. Use polygon wrench (999 571 052 02) to lock shaft and undo hexagon-head nut. Remove shims and pulley half.

2. If belt tension is below specification, remove one shim from between pulley halves and refit in front of front pulley half. Tighten hexagon-head nut to 50 ± 5 Nm.

3. Three additional M 6 screws have to be undone for V-belt and fan wheel.

4. Use only V-belts that have been approved by the manufacturer.

Note

Rotate engine only at lower belt pulley or by operating the starter. After completing all operations, check to make sure that hexagon-head nut has been tightened sufficiently on alternator shaft.

27 60 19 Removing and installing starter (manual transmission)

Removal

1. Disconnect battery and cover terminal and battery, respectively.

2. Remove power unit guard. Loosen and remove hot-air pipe located next to the transmission.

3. Undo and separate drive shaft on differential flange.

4. Undo wires of terminal 30 and terminal 50 from solenoid. Undo wire clamp of terminal 30 from body and remove tie-wrap from starter.

5. Undo hexagon head socket nut of upper starter mount, using 3/8 in. tools (e.g. Stahlwille tools):
   INHEX socket 10 mm (49/10)
   two short extensions (427)
   transverse handle (425)
   ratchet (435)
   extension pipe (shop-made)

6. Undo hexagon socket head nut bolt with transverse handle and extension (shop-made) from right-hand side. Retain the tool on the starter above the transmission with your right hand.

7. The hexagon socket head nut can be unbolted with the ratchet assembled to the above tools. Undo lower fastening bolt and remove complete with ground cable.

8. Take starter out of its support and turn it until the solenoid points towards the halfshaft. Remove starter from below.

Installation

1. The wire from terminal 30 to the alternator must be attached to the starter with two tie-wraps. Fit protective cap to wire clamp.
   Tightening torque of hexagon socket-head nut 46 Nm (34 ftlb.).

2. When fitting the halfshaft flange on the transmission end, make sure the mating faces are absolutely clean and free from grease. Apply a thin coating of Optimoly HT (copper paste) to the bolt threads only.
   Tightening torque of halfshaft flange: 81 Nm (60 ftlb.).

27 60 19 Removing and installing starter (Tiptronic)

Removal

1. Disconnect battery and uncover terminal or battery.

2. Remove engine guard and rear underside panel. Disconnect hot air pipe to left and right of transmission

3. **Slacken** transmission mount bolts **only** (6 bolts) and lower by approx. **10 mm**.

4. Disconnect wire from solenoid terminals 30 and 50. Undo wire clamp of terminal 30 from body and tie-wrap from starter. Undo suction oil pipe from body side member.

5. Using 3/8 inch tools (8 mm INHEX insert), undo hexagon head socket bolts from starter and remove ground strap.

6. Lift starter out of support and rotate starter pinion towards engine oil filter.
   Rotate starter approx 180 deg. along longitudinal axis (solenoid now faces transmission). Carefully take out starter from below.

Installing

1. Use two tie-wraps to tie wire for alternator terminal 30 to starter housing. Fit protective cover to terminal.

Tightening torques:

Hexagon socket head bolts M 10:	**46 Nm** (30 ftlb.)
Transmission mount to body (six M 10 bolts):	**46 Nm** (34 ftlb.)

27 82 01 Troubleshooting the cruise control's control unit

Checking the multiple plug of the cruise control's control unit

Note

When cruise control malfunctions occur, the first item to be checked is fuse no. 19 in the central electrical system. The brake light is protected by the same fuse.

1. Remove right seat.

2. With the ignition off, remove the multiple plug from the control unit.

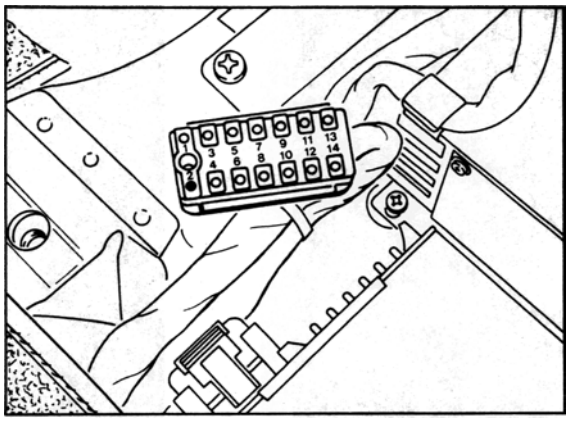

2299-27

3. Connect measuring instrument (voltmeter) to terminal 12 (ground) and terminal 1 (plus) of the multiple plug. Turn ignition on.

   Display = battery voltage

4. Connect measuring instrument to terminal 12 and terminal 3.

   Display = battery voltage

   Press "AUS" key (OFF) on control switch.

   Display = 0 volts

5. Connect measuring instrument to terminal 12 and terminal 4.
   Display = 0 volts

   Press "EIN/BESCHLEUNIGEN" key (ON/ACCELERATE).
   Display = battery voltage

6. Connect measuring instrument to terminal 12 and terminal 6.

   Display = 0 volts

   Press "AUFNAHME" key (RECORD).

   Display = battery voltage

7. Connect measuring instrument to terminal 12 and terminal 8.

   Display = 0 volts

   Operate brake

   Display = battery voltage

8. Connect measuring instrument to terminal 1 (plus) und terminal 14.

   Display = battery voltage

   Operate clutch (switch interrupts)

   Display = 0 volts

9. Connect measuring instrument (oscilloscope) to terminals 12 and 11.
   Turn left rear wheel manually.
   The measuring instrument displays square wave signals.

Continue inspection of cruise control actuator if no faults can be detected.

27 84 01 Troubleshooting the cruise control actuator

Checking the multiple plug of the cruise control actuator

Note

To inspect the multiple plug of the cruise control actuator, the rear heater blower must be removed for better accessibility. The ignition remains switched off.

1. Separate plug connection in engine compartment.

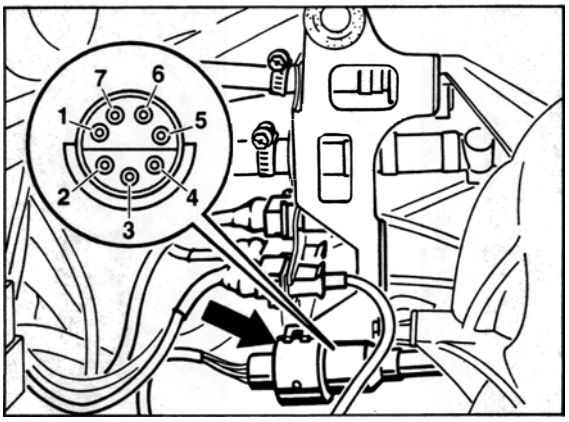

1458-27

2. Connect measuring instrument (ohmmeter) to terminal 1 and terminal 7 of the plug section of the actuator (motor resistance).

   Display = 3 to 15 Ω

3. Connect measuring instrument to terminal 2 and terminal 4 (potentiometer +).

   Display = 2 to 4 kΩ

4. Connect measuring instrument to terminal 2 and terminal 3 (potentiometer slide).

   Display = 2 to 4 kΩ

5. Connect measuring instrument to terminal 5 and terminal 6 (clutch actuator).

   Display = 30 to 40 Ω

If the measurements show no fault, the wire harness to the cruise control's control unit must be checked.
If required, replace the control unit.

Removing and installing cruise control actuators

Note

Observe the following when removing the cruise control actuator:
Up to model year 1995, the left-hand intake distributor must be removed;
as of model year 1996, the entire Varioram intake system must be removed.

27 88 05 Checking and adjusting tie rod for cruise control

Prerequisite:

The throttle must be fully closed and the accelerator cable must be load-free!

Adjusting

1. Remove fresh air blower and rear heater blower.

2. Separate the plug connections in the left front corner of the engine compartment, slacken and remove the vacuum hoses and the holder.

3. Hold the suction pipes of cyl. 1-3 from the left and the right and slacken lock nut (A/F5.5). Use an A/F8 wrench for locking.

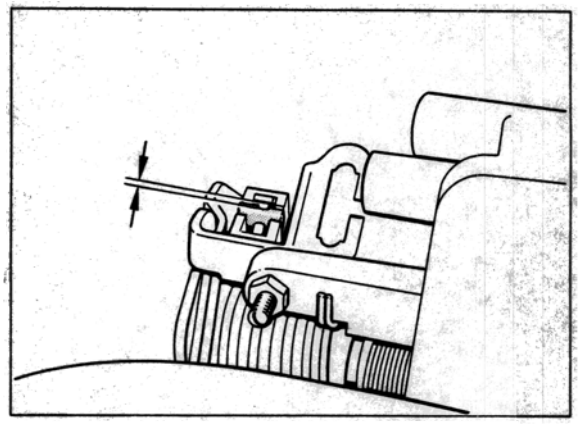

2356-27

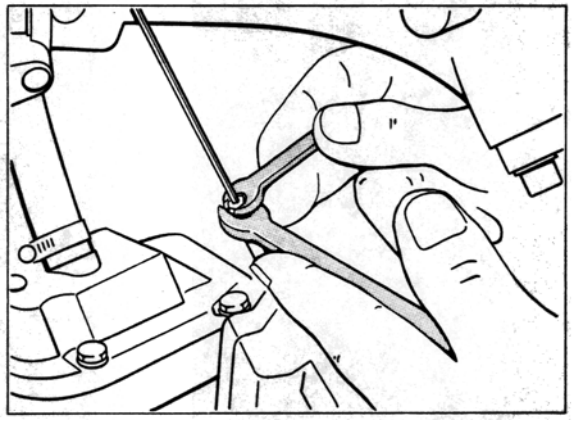

2355-27

For better representation, the engine has been removed in this chart.

4. Adjust operating rod; in off-position, the distance between the take-up part of the operating rod and the upper stopper must be 1 mm. Re-lock hexagon nut.

Repair Manual

911 Carrera
(993)

Volume II:
Transmission
Manual

Dr. Ing. h.c. F. Porsche Aktiengesellschaft

Volume I:	**Overall vehicle – General**	**0**
General	Maintenance, diagnosis	03
Engine		
	Engine	**1**
	Engine – Crankcase, mounting	10
	Engine – Crankshaft, pistons	13
	Engine – Cylinder head, valve drive	15
	Engine – Lubrication	17
	Engine – Cooling	19
	Fuel, exhaust system, engine electrical system	**2**
	Fuel supply, control	20
	Exhaust system – Turbocharging	21
	Fuel system, electronic injection	24
	Fuel system, K-Jetronic	25
	Exhaust system	26
	Starter, power supply, GRA	27
	Ignition system	28
Volume II:	**Transmission**	**3**
Transmission	Clutch, control	30
Manual transmission	Manual transmission – Controls, case	34
	Manual transmission – Gears, shafts, inner operation	35
	Final drive, differential, differential lock	39
Volume III:	**Transmission**	**3**
Transmission	Automatic transmission – Torque converter	32
Automatic transmission	Automatic transmission – Controls, case	37
	Automatic transmission – Gears, control	38
	Final drive, differential, differential lock	39
Volume IV:	**Chassis**	**4**
Chassis	Front wheel suspension, drive shaft	40
	Rear wheel suspension, drive shaft	42
	Wheels, tires, alignment	44
	Anti-Lock System (ABS)	45
	Brakes – Mechanical	46
	Brakes – Hydraulics, regulator, booster	47
	Steering	48

Volume V:	**Body**	**5**
Body	Body front section	50
	Body center section, roof, frame	51
	Body rear section	53
	Hoods, lids	55
	Front doors, Central Locking System	57
	Exterior body equipment	**6**
	Sunroof	60
	Soft top, hardtop	61
	Bumpers	63
	Glasses, window control	64
	Exterior equipment	66
	Interior equipment, passenger protection	68
	Interior body equipment	**7**
	Trim, insulation	70
	Seat frames	72
	Seat upholstery, covers	74
Volume VI:	**Air conditioning**	**8**
Air conditioning	Heater	80
Vehicle electrics	Ventilation	85
	Air conditioning	87
	Auxiliary air conditioning system	88
	Electrical system	**9**
	Instruments, alarm	90
	Radio, telephone, on-board computer	91
	Windshield wipers and washer	92
	Exterior lights, lamps, switches	94
	Interior lights, lamps, switches	96
Volume VII:	**Electrical system**	**9**
Wiring diagrams	Wiring	97
Volume VIII:	**Diagnosis**	**D**
Diagnosis	Self-diagnosis	03
	DME Diagnosis	24
	Tiptronic Diagnosis	37
	PDAS Diagnosis	39
	ABS Diagnosis	45
	Airbag Diagnosis	68
	Heater Diagnosis	80
	Alarm Diagnosis	90

Preface

Structure

The "Technical Literture" for the "911 Carrera (993)" model is basically structured as before, i.e. the structure follows the familiar repair groups.

A new feature is that the structure includes the main groups **0 to 9** and the main group **D**.

Main groups:	0	Complete vehicle – General
	1	Engine
	2	Fuel, exhaust, engine electrical system
	3	Transmission
	4	Chassis
	5	Body
	6	Body equipment, outside
	7	Body equipment, interior
	8	Air conditioning
	9	Electrical system
	D	Diagnosis

Layout

The layout in the below items remains unchanged throughout the repair manual

1. Table of tightening torques
2. Special tools required
3. Exploded views
4. Legends for the exploded views
5. Assembly notes / use of special tools

As a new feature, however, the former item 6 (Repair group diagnosis) is no longer filed in the volume corresponding to the respective repair group. The **Diagnosis test plans / diagnosis procedures** have been combined in a **separate Diagnosis volume** broken down according to the main groups 0 to 9.

Another new feature is that the contents of the "Service Information Technik" are indicated in the Repair Manual. This brochure concentrates on a description of the design and function of components and of the new features introduced for a particular model year.

Service Number

All major repair procedures and repair descriptions are identified by a two- or four-digit **Service Number** completed by two additional digits to identify the work that corresponds to the first six digits of the working position number in the Working Times and Damage Catalog.

Example: 30 37 37 Dismantling and assembling clutch control shaft

Explanation: **30** **37** **37** 50 (full working position number)

Repair group
here: Clutch, control

Component designation
here: Clutch control shaft

Activity
here: Dismantling and assembling

Index
here: Removed

Presentation in the various documents

30 37 37 50	Working position no. from **Working Times and Damage Catalog**, consisting of repair group, component designation, activity and index
30 37 37	Six-digit number in **Repair Manual**, consisting of repair group, component designation and activity
30 37	Service number in **Service Information**, consisting of repair group and component designation

Goal

The introduction of a service number in the "technical literature" is intended to facilitate standardization and positive identification to allow direct cross-referencing among the various documents. This is of particular importance with regard to the use of electronic media.

II Manual transmission

The Repair Manual of the 911 Carrera (993) also includes the 911 Carrera 4 manual (993 four-wheel drive). The 911 Carrera (993) is the basic model covered by the repair operations described in this Manual. "911 Carrera (993)" is also indicated in the header of each page.

Descriptions of repair operations that deviate for the 911 Carrera 4 will be included after the respective 911 Carrera section. The repair descriptions of both models are separated by a cover page. All pages included after the cover page (separation sheet) have the "911 Carrera 4" heading. To facilitate distinction, the page numbering will start with 200.

3 Transmission

3	Technical data	3 - 1
30	**Clutch, Control**	
30 37 37	Dismantling and assembling clutch control shaft	30 - 1
30 56 01	Checking clutch drive plate for wear	30 - 5
30 52 19	Removing and installing release bearing	30 - 7
30 52	Identification of clutch pressure plates	30 - 11
30	Pedals - adjustment overview	30 - 13
30	Disassembling and assembling pedals	30 - 15
34	**Manual Transmission, Controls, Case**	
34 35 27	Removing and refitting the transmission	34 - 1
34 35 37	Dismantling and assembling transmission	34 - 3
34 55 19	Dismantling and assembling front transmission cover	34 - 17
34 52 37	Dismantling and assembling gear housing	34 - 23
34 37 37	Dismantling and assembling transmission housing	34 - 27
34	Adjusting gear shift	34 - 31
35	**Manual Transmission - Gears, Shafts, Internal Controls**	
35 50 19	Removing and installing input shaft oil seal	35 - 1
35 19 37	Dismantling and assembling tensioning plate	35 - 3
35 40 19	Removing and installing input shaft	35 - 7
35 40 37	Dismantling and assembling input shaft	35 - 15
35 59 37	Dismantling and assembling output shaft	35 - 21
35 75 19	Removing and installing 5th gear (transmission is installed)	35 - 23

Printed in Germany - 16, 1996

39	**Final Drive, Differential, Differential Lock**	
39 09 19	Removing and installing differential	. 39 - 1
39 09 37	Dismantling and assembling differential . .	. 39 - 5
39 08 15	Adjusting drive set	. 39 - 11

Survey of contents of Service Information Technik '95

The Service Information gives a detailed description of the technical features of the new 911 Carrera.

	Rep. Gr.	Page
Engine		
General		1 - 1
Engine cross-sections	10	1 - 4
Full-load curve		1 - 6
Belt pulley	13	1 - 8
Pistons	13	1 - 10
Hydraulic valve lash adjuster	15	1 - 16
Setting the timing	15	1 - 18
USA - auxiliary air pump		1 - 19
Fuel and ignition systems		
General		2 - 1
DME - Schematic	24	2 - 2
Fuel - air flow	24	2 - 3
Exhaust gas flow	26	2 - 5
DME control unit 2.10.1	24	2 - 9
Mass air flow sensor	24	2 - 12
Throttle potentiometer	24	2 - 18
Ignition system	28	2 - 24
Plausibility test		2 - 28
Diagnosis		2 - 29
Auxiliary air pump	26	2 - 33
Power transmission		
Transmission	30	3 - 1
Clutch	30	3 - 2
Manual transmission	34	3 - 3
Transmission ratios		3 - 6
Gear set	35	3 - 8
Synchromesh	35	3 - 9
Final drive	39	3 - 13
Oil supply		3 - 15
Porsche Tiptronic	37	3 - 16
Modifications for the '95 model year		3 - 17

	Rep. Gr.	Page
Running gear		
General		4 - 1
Front axle	40	4 - 2
Steering	48	4 - 7
Rear axle	42	4 - 8
Elasto-kinematic toe correction	42	4 - 12
Coil springs (layout)	42	4 - 13
Wheels, tires	44	4 - 15
Suspension alignment	44	4 - 17
Brakes	47	4 - 20
Bleeding the brakes	47	4 - 23
ABS 5	45	4 - 24
Operation of the ABD	45	4 - 30
Diagnosis ABS/ABD	45	4 - 34
Body		
General		5 - 1
Constructional dimensions	50	5 - 4
Aerodynamics and air ducting	50	5 - 8
Body equipment		
Body equipment		6 - 1
Color scheme as of 1995 model year	60	6 - 1
Windows	64	6 - 8
Airbag system	68	6 - 14
Body - interior trim		
Body - interior trim	70	7 - 1
Seats	72	7 - 5
Heating, air conditioning, ventilation		
Particle filter	85	8 - 1
Air ducting	80	8 - 3
Heating - air conditioning unit	85	8 - 5
Heating - air conditioning unit	87	8 - 6
Series resistor of rear blower	80	8 - 9

	Rep. Gr.	Page
Electrical system		
Instruments	90	9 - 1
Alarm system/central locking system	90	9 - 3
Heated rear window	64	9 - 6
Central Information System (Z I)	91	9 - 7
Radio "Alpine 7807"	91	9 - 10
Sound package, DSP-System	91	
Windshield wiper and washer system	92	
Headlights	94	
Front end light cluster	94	
Tail lights	94	
Engine compartment baseplate	97	
Wiring diagram		
Summary		
Maintenance		0 - 1
Number ranges		0 - 4
Technical data		0 - 5

3 Technical data

6 speed manual transmission G 50 / 20 / 21 for 911 Carrera (993)

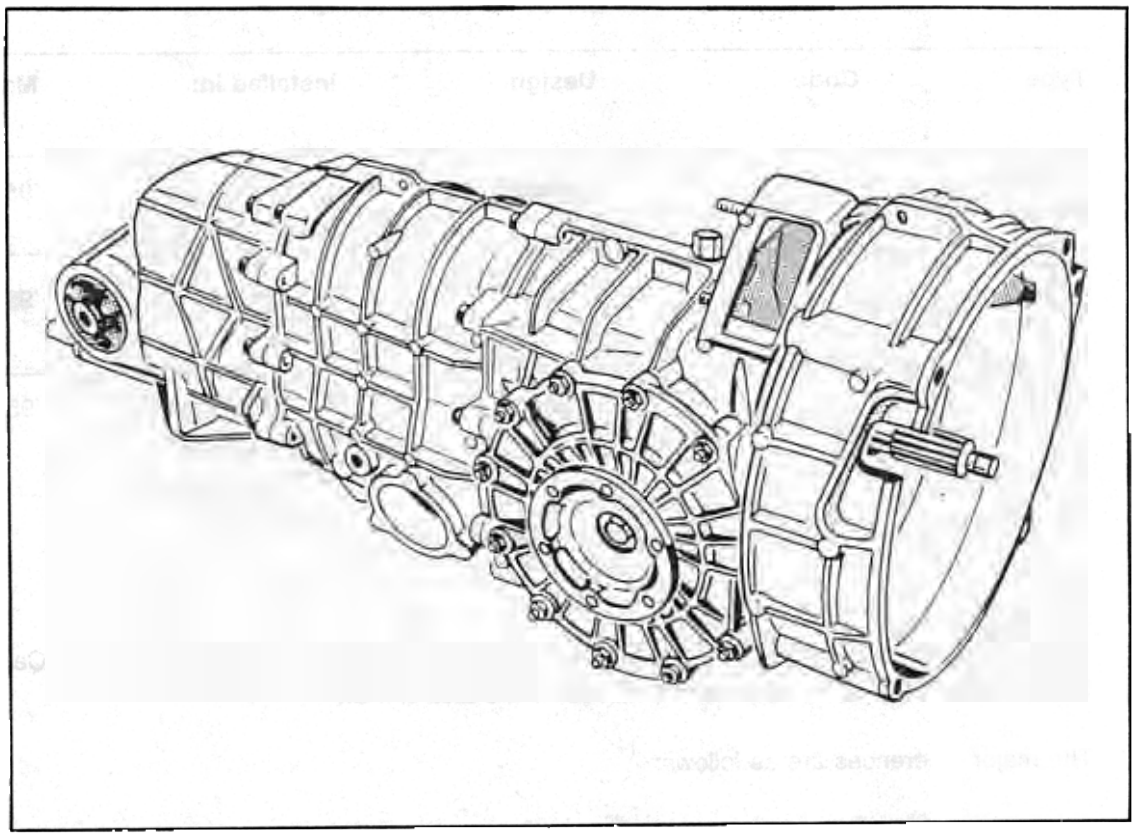

Type	Equipment	installed in:	Model year
G 50/21	6 speed	911 Carrera worldwide except USA, CH, A	'94...'96
G 50/20	6 speed	911 Carrera USA, CH, A	'94...'96
		911 Carrera worldwide	'97

3 Technical data

6-speed manual transmission, type G 50/31/32/33 for 911 Carrera RS

Type	Code	Design	installed in:	Model year
G50/31		6-speed	911 Carrera RS (basic vehicle)	'95/'96
G50/32		6-speed	911 Carrera RS (Clubsport)	'95/'96
G50/33		6-speed	911 Carrera RS (basic vehicle and Clubsport) Switzerland	'95/'96

Apart from a few differences, the transmission of the Carrera RS has a similar design to Carrera transmissions G50/20/21; the repair procedures are also similar.

The major differences are as follows:

different gear ratios

- 2nd gear wheel splined to drive shaft

steel/molybdenum synchronizer ring (type G50/32 only)

- limited-slip differential as standard equipment (locking values 40 % under acceleration, 65% under deceleration)

harder gearbox bearing

3 Technical data

Structure of transmission numbers

G5021	1	05641
Transmission type	**Index of variations within the assembly no.** 1 = normal differential 2 = limited slip differential	**Serial no.** e.g. 05641

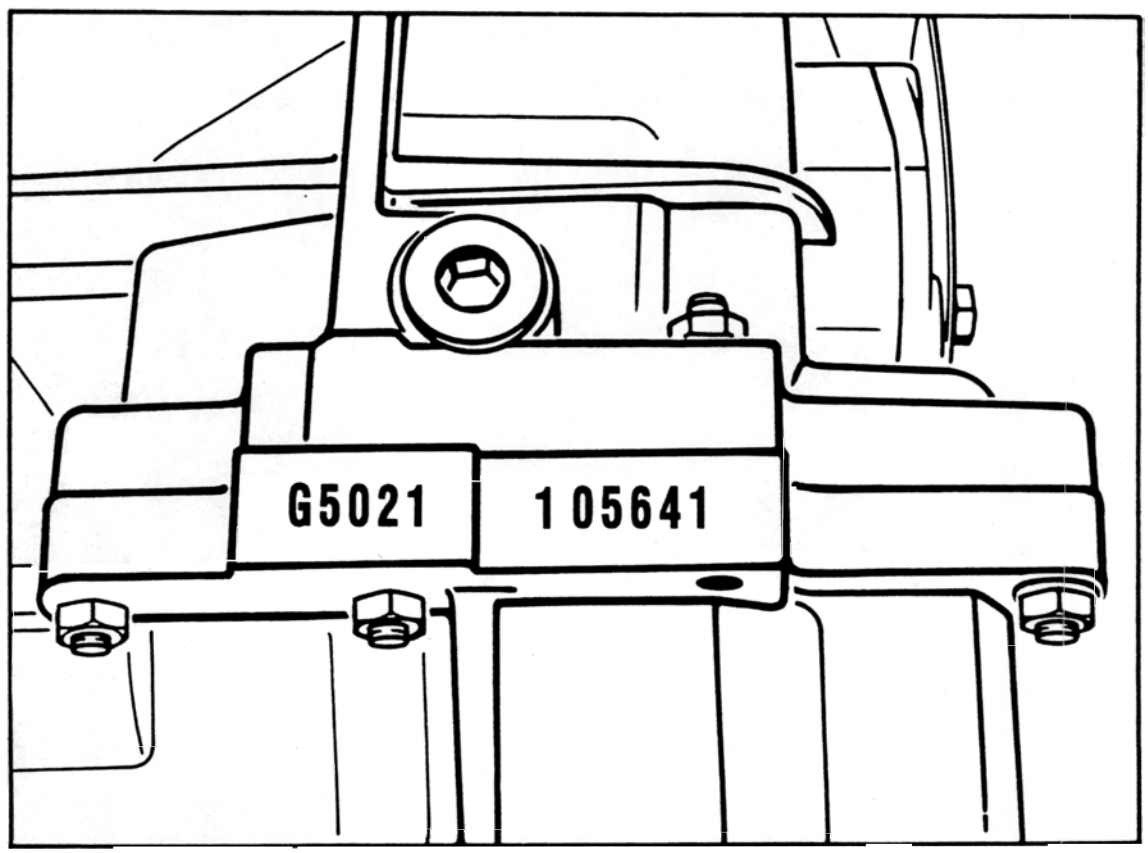

3 Technical data

Manual transmission for 911 Carrera (993)

General data	Manual transmission G 50 / 21 / 20	
Transmission ratios	G50/21 Z_1 Z_2 = Z_2 : Z_1	G50/20 Z_1 Z_2 = Z_2 : Z_1
1st gear	11 : 42 = 3.818	11 : 42 = 3.818
2nd gear	20 : 43 = 2.150	21 : 43 = 2.048
3rd gear	25 : 39 = 1.560	27 : 38 = 1.407
4th gear	33 : 41 = 1.242	34 : 38 = 1.118
5th gear	37 : 38 = 1.027 41 : 42 = 1.024*	38 : 35 = 0.921 42 : 39 = 0.928**
6th gear	39 : 32 = 0.820	40 : 31 = 0.775
Rev. gear	14 : 40 = 2.857	14 : 40 = 2.857
Final drive	Hypoid bevel-gear drive with 16 mm offset	
Transmission Final drive	9 : 31 = 3.444	9 : 31 = 3.444
Capacity	3.6 liter multigrade transmission oil SAE 75 W 90 of API classification GL 5 (or MIL-L 2105 B)	

* introduction 15 December 1994

** introduction 7 December 1994

3 Technical data

Manual transmission for Carrera RS

General data	Manual transmission G 50 / 31 / 32 / 33		
Ratios	G50/31 Z1 Z2 = Z2 : Z1	G50/32 Z1 Z2 = Z2 : Z1	G50/33 Z_1 Z_2 = Z_2 : Z_1
1st gear	13 : 41 = 3.154	13 : 41 = 3.154	13 : 41 = 3.154
2nd gear	20 : 40 = 2.000	20 : 40 = 2.000	20 : 40 = 2.000
3rd gear	23 : 35 = 1.522	23 : 35 = 1.522	27 : 38 = 1.407
4th gear	33 : 41 = 1.242	29 : 36 = 1.241	34 : 38 = 1.118
5th gear	41 : 42 = 1.024	32 : 33 = 1.031	37 : 36 = 0.973
6th gear	39 : 32 = 0.821	35 : 29 = 0.829	39 : 32 = 0.821
Reverse	14 : 40 = 2.857	14 : 40 = 2.857	14 : 40 = 2.857
Final drive	Hypoid bevel final drive with 16 mm offset		
Final drive ratio	9 : 31 = 3.444	9 : 31 = 3.444	9 : 31 = 3.444
Filling capacities*	3.6 l multi-grade transmission oil SAE 75 W 90, API specification GL 5 (or MIL-L 2105 B)		

*933 GT 2 (transmission type G 50/53) **only** Veedol SAF 44.

3 Technical data

Tightening torques for manual transmission and transmission mounts

Location	Thread	Tightening torques Nm (ftlb.)
Oil drain and oil filler plugs	M 22 x 1.5	30 (22)
Hexagon head nuts at: Front and side transmission cover, gear and transmission housings. Tensioning plate	M 8	23 (17)
Clamping plate to front transmission cover	M 6	10 (7)
Hexagon head nut / input shaft	M 22 x 1.5	200 (147)
Hexagon head nut / input shaft	M 30 x 1.5	250 (184)
Hexagon head nut / output shaft	M 30 x 1.25	300 (220)
Hexagon head nut / shift fork	M 8	23 (17)
Reverse light switch to gear housing	M 18 x 1.5	35 (26)
Guide tube to transmission housing	M 6	10 (7)
Selector gate to tensioning plate	M 6	10 (7)
Collar nut / return gear II	M 8	35 (26)
Vent to transmission housing	M 14 x 1.5	35 (26)

Location	Thread	Tightening torques Nm (ftlb.)
Hexagon head bolt / halfshaft flange	M 10	44 (32)
Oil cup to tensioning plate	M 5 (micro-sealed)	6 (4)
Ring gear to differential housing (Hexagon head bolt with serrated mating surface)	M 12 x 1.25	200 (148)
Transmission mount to body	M 10 x 70	46 (34)
Transmission mount to transmission (lock nut)	M 12 x 1.5	85 (63)
Longitudinal mount to transmission	M 12 x 1.5 x 65	85 (63)
Longitudinal mount to transmission (lock nut)	M 10	30 (22)

30 37 37 D smantling assem in clutch trol haft

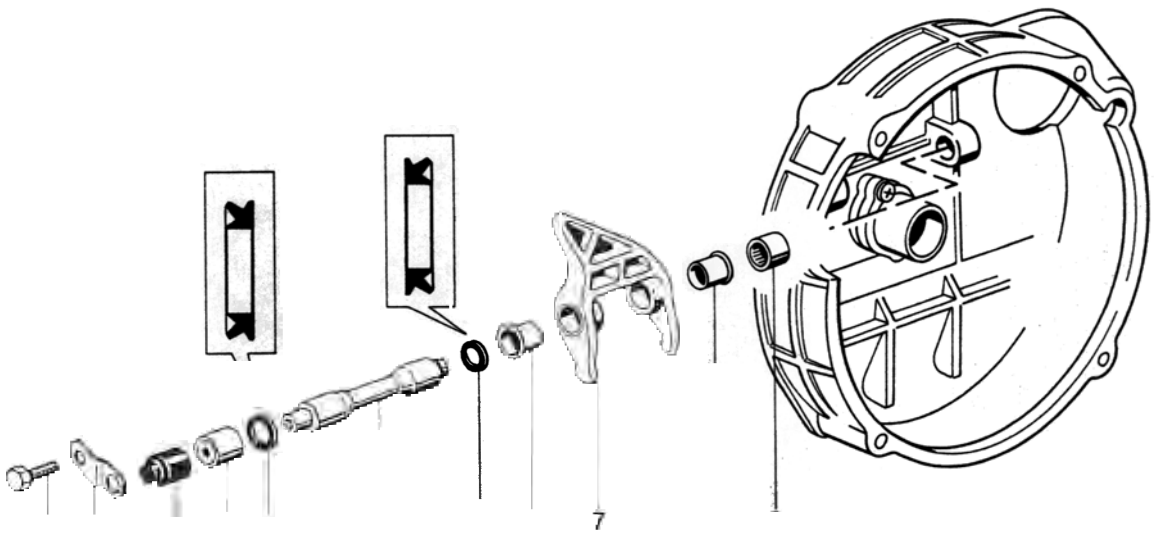

No.	Designation	Qty.	Note: Removal	Installation
1	Hexagon head bolt M 6 x 16	1		
2	Bracket	1		
3	Bearing cover	1		Pack with grease (use Olista Longtime 3 EP)
4	Needle-roller bearing with assembly hole	1		Install in correct position, assembly hole points towards outside
5	Release lever shaft	1	Pull out with hexagon head screw M 6 x 40	Do **not grease** plastic bushing bearing surface
6	Sealing ring	2		Check, replace if required, install in correct position
7	Release lever	1		
8	Plastic bushing	2		**Do not grease**
9	Needle-roller bearing without assembly hole	1		

Note

Lubricate all sliding surfaces of the clutch release mechanism - **except for the items indicated in the list - with Olista Longtime 3 EP**, Part No. 000.043.024.00.

Assembly notes

Removing bearing cover

Insert a suitable screwdriver across rectangular cutout (of clutch bell housing) and push bearing cover out of bearing hole.

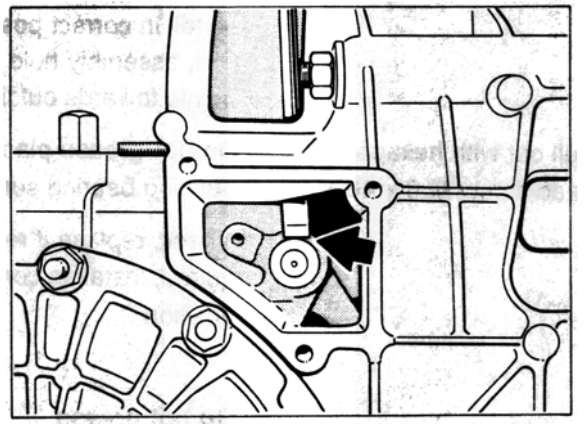

1865-30

Installing bearing cover

Locate bearing cover with assembly mandrel, e.g. Special Tool 9287 (drift for headlamp beam range adjusters) and carefully press in to stop.

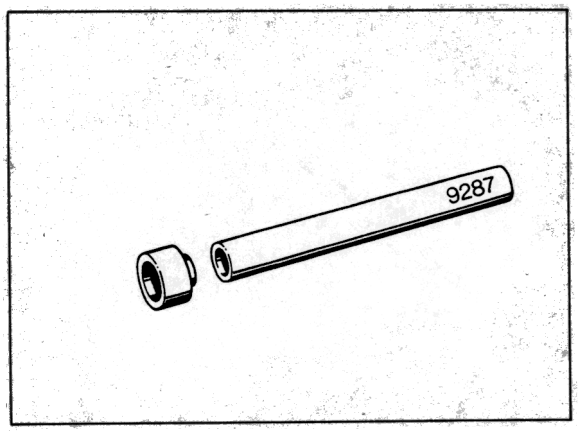

1866-30

30 56 01 Checking clutch drive plate for wear

(clutch drive plate removed)

Checking:

Using a depth gage or sliding calipers, measure distance X from surface of lining to rivet head.

Note

Measure only at the beaded-over side of the rivet head.

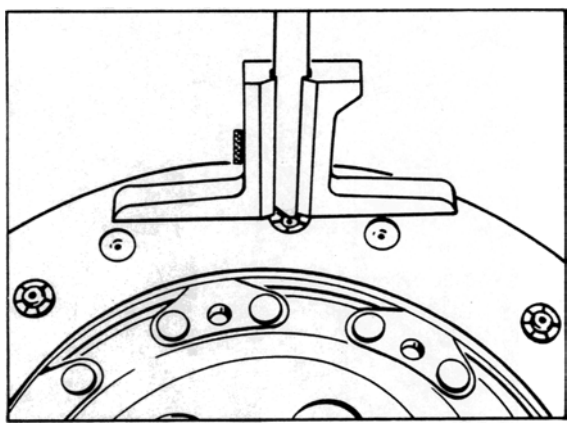

645-30

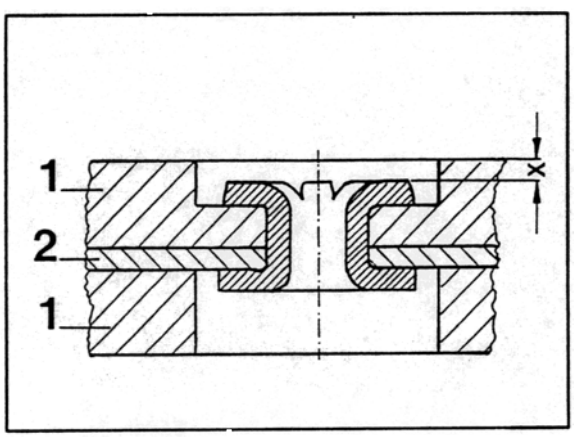

646-30

1 - Lining
2 - Drive plate/lining spring

Wear limit X is **0.3 mm** (see drawing).
When the drive plate is new, this dimension is approx. 1.0 mm.
Note that **lining wear** is **not linear**, i.e. not at a steady rate throughout the clutch's operating life. The way in which the lining material beds down and is compressed initially suggests that greater lining wear is taking place, but as the car is driven further, the rate of wear declines considerably.

Printed in Germany – IV, 1994

30 52 19 Removing and installing release bearing

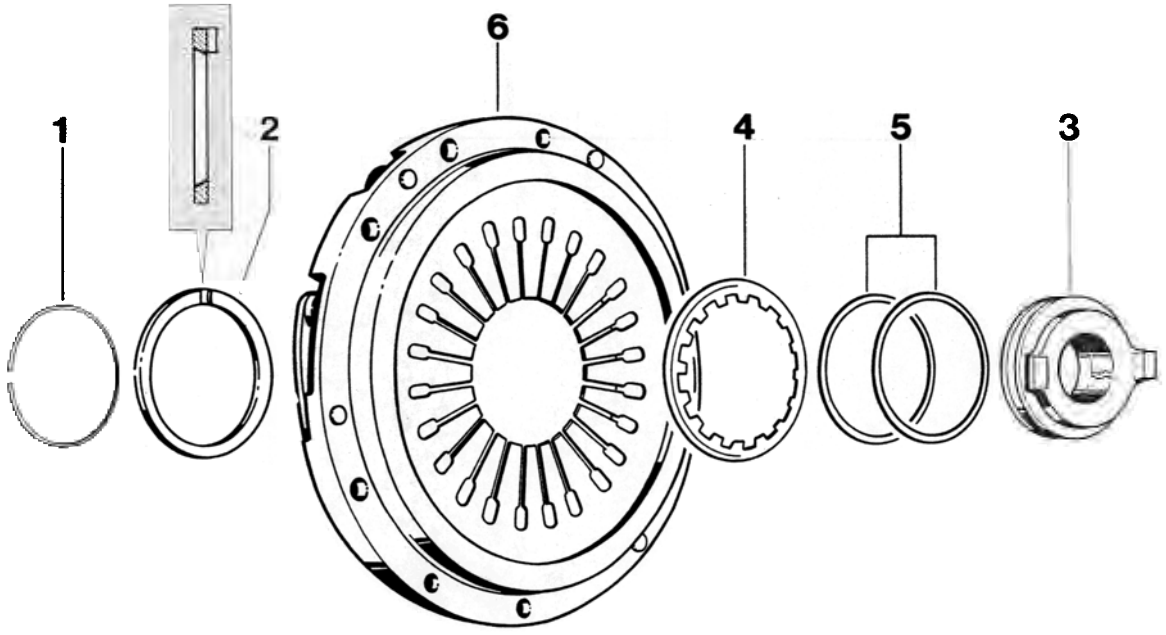

11003-30

No.	Designation	Qty.	Note: Removal	Installation
	Snap ring	1	use pointed pliers to remove, pressing down thrust plate in a press	observe correct seating of snap ring
2	Thrust washer	1		groove must face snap ring
3	Release bearing	1	check, do not wash out, just wipe with a dry cloth	
4	Spring washer	1	install in correct position	
5	Spacer	2		**always insert 2 spacers**
6	Thrust plate	1		check for wear, replace if required

Assembly notes

1. The snap ring can only be fitted with a shop press. Use a wooden block as a thrust piece.

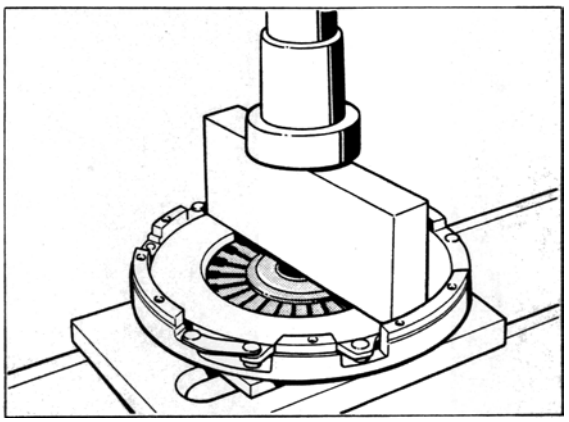

1000-30

2. Install spring washer in correct positiion.

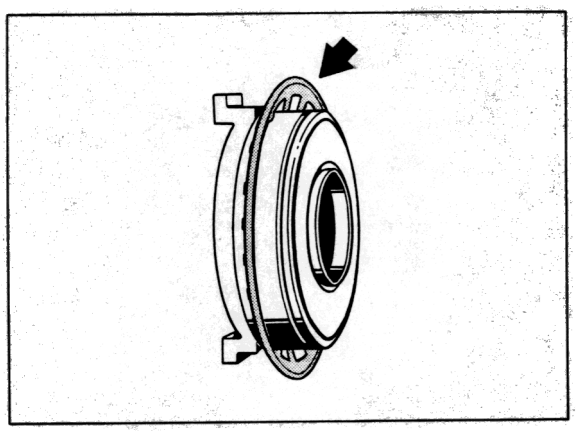

1001-30

3. Do not grease sliding surfaces of release bearing and guide tube.

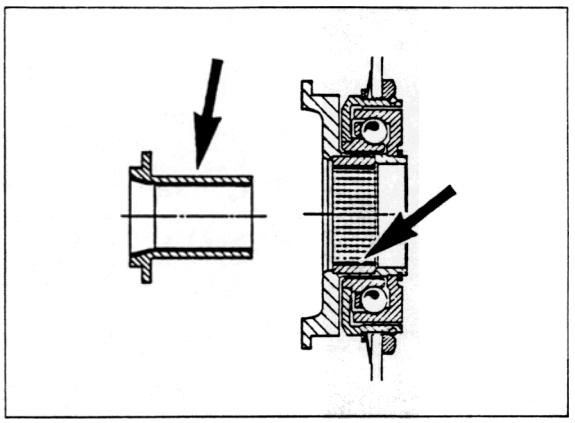

1867-30

4. The guide sleeve is slotted (uneven outline - see arrow).

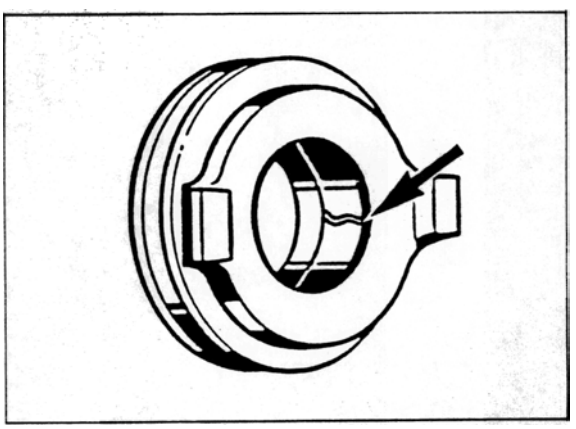

1868-30

30 52 Identification of clutch pressure plates

To avoid confusion, the pressure plates are color-marked for positive identification.

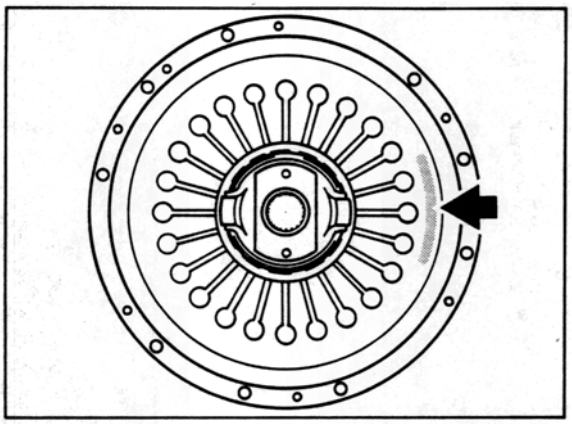

836-30

Color marking:

968	Green
911 Carrera 2/4	Blue
911 Carrera (993)	No mark
911 Turbo 3.6	Red

Printed in Germany – IV, 1994

30 Pedals - adjustment overview

Adjusting clutch pedal

Note

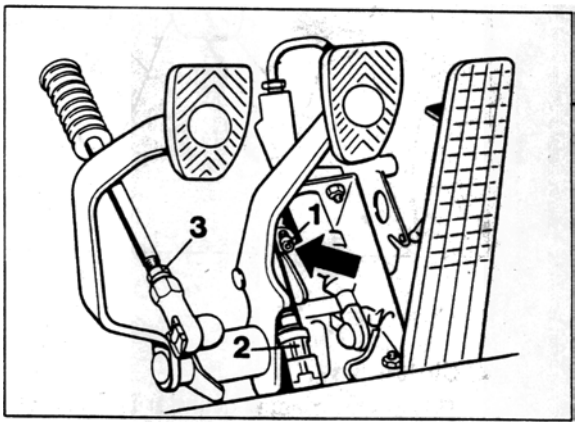

The following points are **prerequisites** for proper operation of the clutch and must be observed when adjusting the pedals:

- Proper bleeding of the hydraulic clutch system
- Tightness of the hydraulic system
- Proper setting of the servo spring
- Returning of pedal to initial position
- Pedal travel limited by properly adjusted floor board stopper
- Installation position of pedals in accordance with standard situation.

Checking and adjusting work

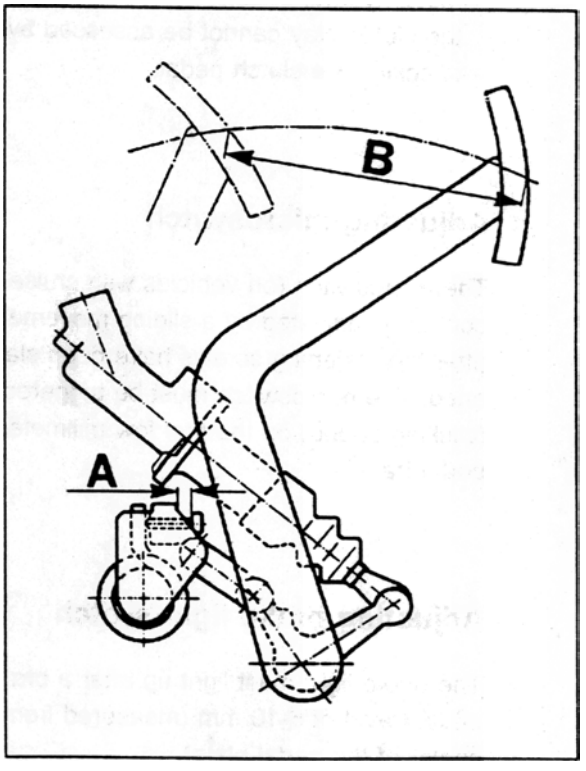

1. **Checking the pedal return (returning force)**
   Try to return the pedal to its initial position by applying at least 30 N (spring scale). The pedal must not yield. If it does yield (= insufficient returning force), the servo spring pre-load must be reduced or set to the dimension A = 6 mm (see 2.).

2. **Setting servo spring (dim. A = 6 mm).**
   The servo spring is set by turning the hexagon socket head bolt **arrow / no. 1** (chart 1097-30). The distance (dimension A/ figure 1113-30) between the inner face of the bolt head and the rocker must be **6 mm**.

3. **Checking pedal travel (dim. B = 150 mm).**
   Measured from the center of the pedal plate, the pedal travel must be **150 mm + 5** mm. If necessary, adjust or limit the pedal travel on the floor board stopper (fig. 1098-30 on p. 30-14).

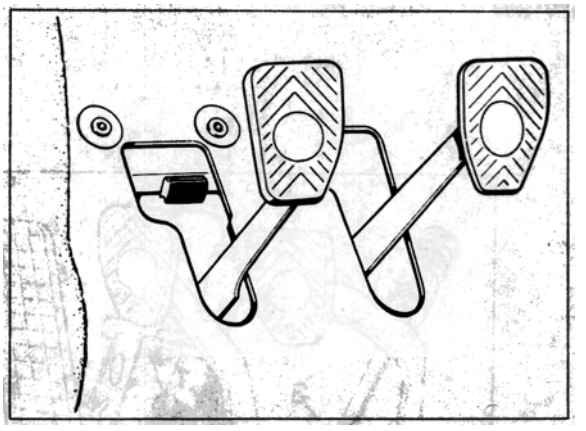

1098-30

4. Clutch play.

The clutch master cylinder is fitted with an internal stopper. The push rod and the clutch pedal are always pressed against this stopper by the servo spring. Due to automatic hydraulic readjustment of the clutch, the clutch play cannot be assessed by checking the clutch pedal.

Adjusting microswitch

The microswitch (on vehicles with cruise control) is adjusted by a sliding movement after the fastening screws have been slackened. The microswitch must be triggered (clicking sound) on the first few milimeters of pedal travel.

Adjusting brake light switch

The brake light must light up after a brake pedal travel of 6-16 mm (measured from the center of the pedal plate).

If the brake light lights up after a brake travel of less than 6 mm, the brake light switch (2) must be turned to the right until it responds within the range of tolerance. Do not damage the electric wire and the plug. If the adjustment range of the brake light switch is not sufficient, the brake pedal must be adjusted at the ball joint of brake push rod 3 (by shortening push rod).

If the brake light lights up after a pedal travel of more than 16 mm, the brake pedal must be adjusted at the ball joint of the brake push rod (by extending push rod) until the brake pedal switch responds within the range of tolerance.

Note

Usually, the brake pedal plate is roughly at the same height as the clutch pedal plate (plus/minus 3 mm).

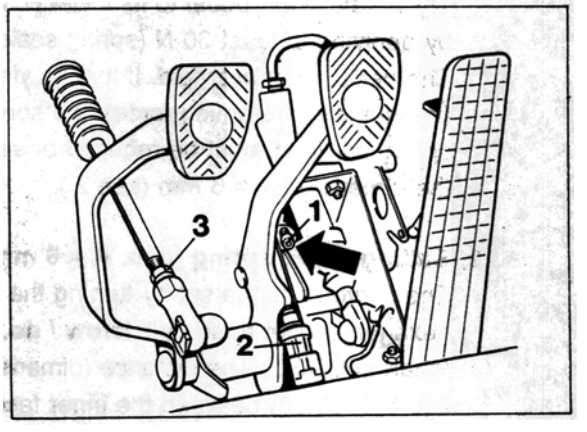

1097-30

Throttle operation

Check for smooth operation and at wide open throttle.

30 Disassembling and assembling pedals

Includes: removing and installing pedals

Important note

Remove the pedals together with the clutch master cylinder.
To do so, slacken the hydraulic lines on the clutch master cylinder. **Release servo spring partially** (move clutch pedal into de-clutched position).
Plug the hydraulic lines or clamp off the supply line using a commercially available hose clamp. Also plug the connecting bores of the clutch master cylinder.

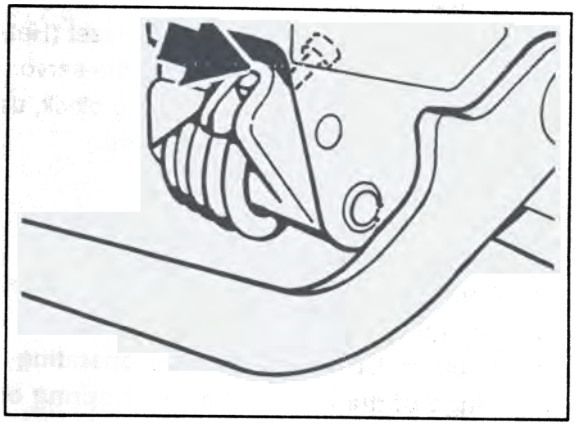

2358-30

3. Remove clutch master cylinder. Then lock rocker / servo spring. To do so, move clutch pedal **into de-clutched position**.
In this position, operate clutch pedal (by pulling it backwards), until an auxiliary tool (steel pin with 8 mm Ø) can be inserted from the side into the bore of the rocker.

Disassembling pedals

1. Mount brake pedal of pedal system onto a vise **– using protective jaws –**.

2. Turn adjustment screw for the servo spring to the left (counter-clockwise), until the leg of the servo spring fits closely to the rocker (arrow).

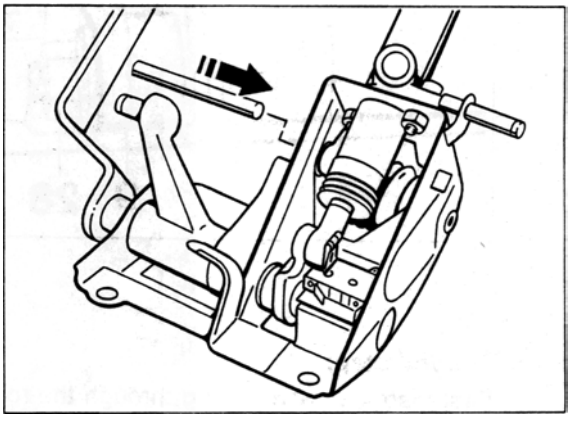

2357-30

4. Release servo spring in **two** steps.
   Use an appropriate spring tensioning tool, e.g. brake spring pincers by Hazet (Hazet no. 797) to load and release the servo spring.To protect the mounting block, use a liner when applying the pincers.

First step:
Remove the support pin **(arrow)** on lever no. 9 **using a screw driver**.
Caution: Do not get into the operating range of the rocker, the servo spring or the levers with your fingers or hands.

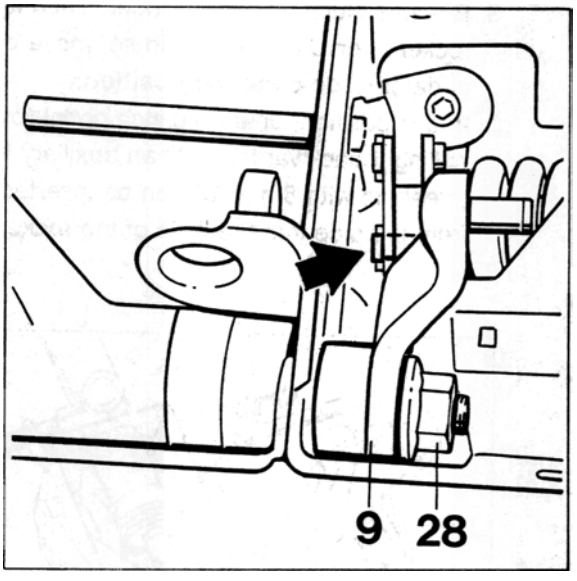

2370-30

Second step:
First load the servo spring through the rocker until the auxiliary tool (steel pin with 8 mm Ø) can be removed easily from the bore of the rocker. Then release the servo spring by opening the pincers.

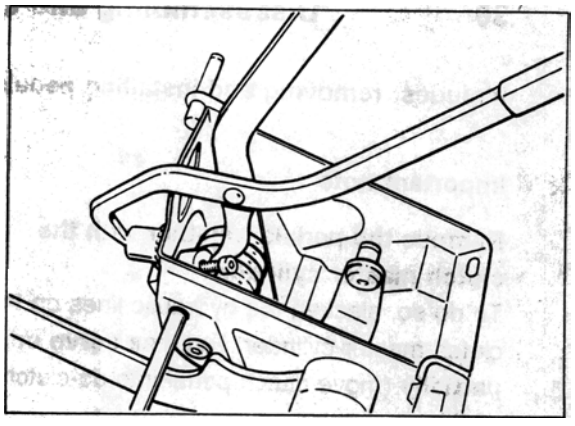

2366-30

5. On vehicles with cruise control:
   Mark position of microswitch.
   Remove microswitch.

6. Slacken fastening nut no. 28 on operating lever no. 9.
   Remove lever from clutch pedal shaft – **through the lateral bore on the mounting block** – using a copper or brass mandrel.
   If lever can be removed, continue with item 8.

Important note

If lever no. 9 cannot be removed from the clutch pedal shaft without damaging the clutch pedal shaft (which may occur due to tolerances), continue with item **7**.

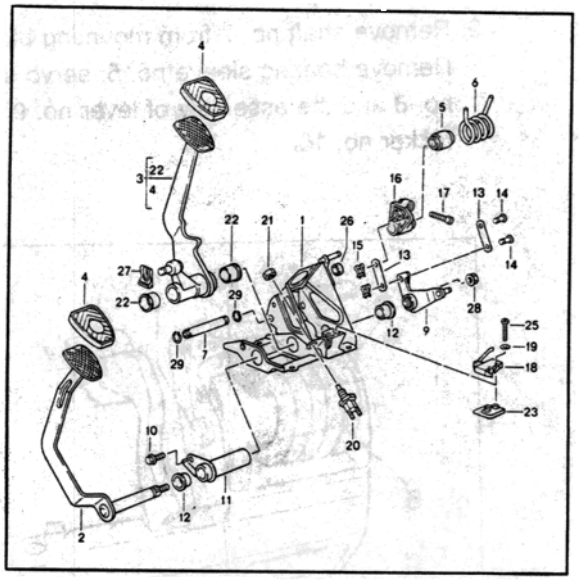

2348-30

7. If **lever no. 9** cannot be removed from the clutch pedal shaft without damaging the clutch pedal shaft (which may occur due to tolerances), part of the mounting block must be sawed off (arrow / dotted line). Then remove the lever using a commercially available two-claw puller.

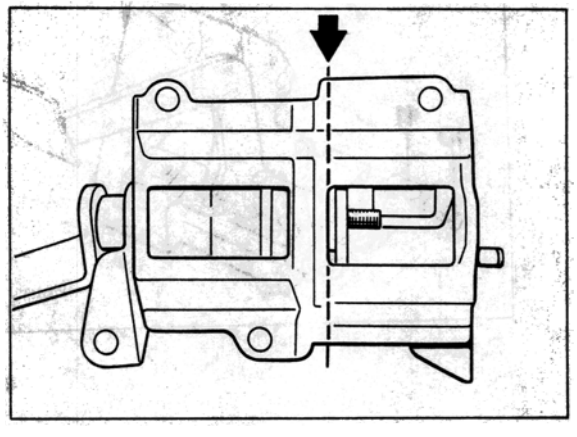

2359-30

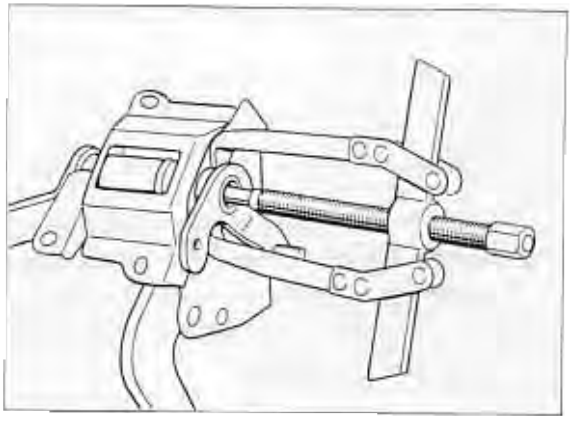

2360-30

If the lever cannot be removed with a puller, the clutch pedal shaft must be destroyed. To do so, separate clutch pedal from pedal shaft (by sawing) with bearing tube no. 11 slackened (screw no. 10 removed).

If lever no. 9 can be reused (see – Note – on page 30-18), remove the lever from the pedal. To do so, use plate VW 401 and an appropriate bushing, e.g. Matra 40-503.

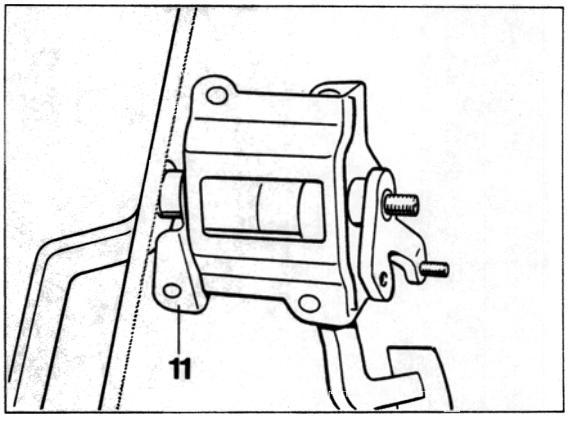

2361-30

8. Lift out clutch pedal shaft with clutch pedal.

Note

If the pedals were disassembled because of the complaint – **sometimes the clutch pedal does not return fully –**, replace lever no. 9 (fig. 2348-30 / new, modified version with optimized kinematics).

> Distinguishing old and new levers

Part number on part.

> Previous version:

Part no. 993 423 519 **00** or
993 423 519 **01** (gold-colored).

> Modified / new version:

Part no. 993 423 519 02 (olive).
In the beginning, the modified, new levers were golden as well.

9. Remove shaft no. 7 from mounting block. Remove bearing sleeve no. 5, servo spring no. 6 and the assembly of lever no. 9 and rocker no. 16.

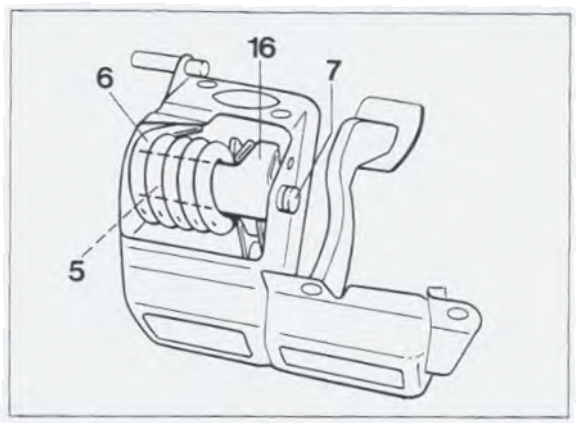

2365-30

10. Remove bearing pipe no. 11 and brake pedal.

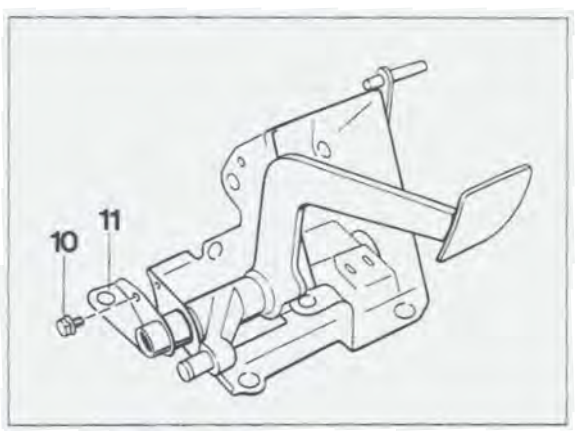

2363-30

Assembling pedals

1. **Check all parts, replace any parts, if required.**
   If the bushings must be replaced, use an appropriate mandrel for removal or installation. **Coat all bearings and slide faces with a Teflon-compatible low temperature grease – e.g. Glissando by DEA (Texaco).**

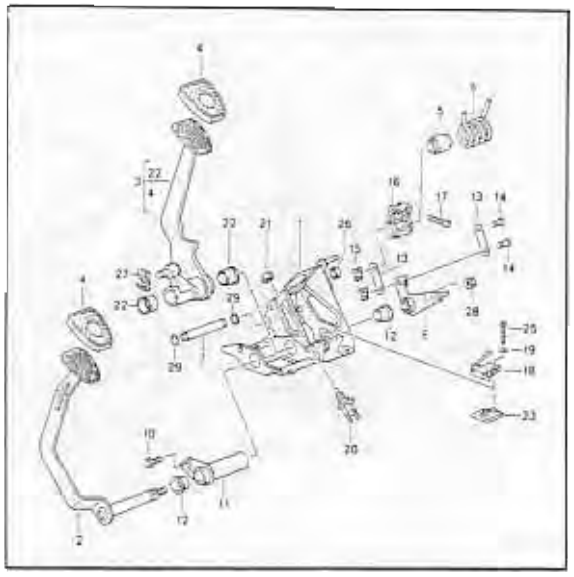

2348-30

Note

Check the mounting block for deformations (might stem from removal of lever no. 9).
If necessary, remove the mounting block.

2. Insert brake pedal into mounting block. If necessary, fit a shim (arrow) between the brake pedal and the mounting block (to compensate for the axial play). The shim is not always present.
   When replacing the mounting block or the brake pedal, determine the thickness of the shim (if present and/or required):
   With the brake pedal installed, determine by trial and error which shim can be inserted. There are shims with two different thicknesses available.
   Insert bearing tube no. 11.
   Insert screw no. 10, but do not tighten it yet.
   Important: Tighten screw no. 10 only after installing the pedals.

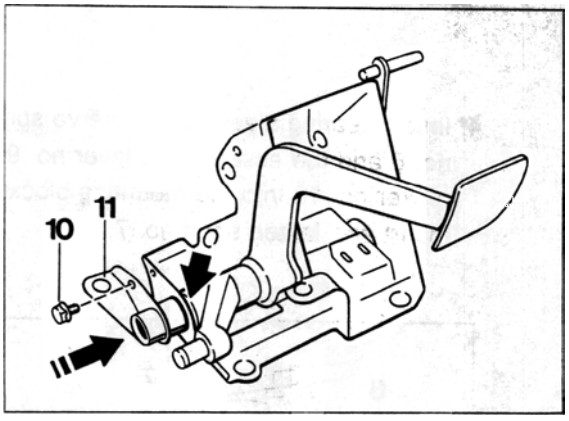

2363/1-30

3. Preassemble lever no. 9, rocker no. 16 and connecting pieces no. 13. If necessary (after installaton of a new rocker), turn adjustment screw no. 17 until the leg of the servo spring fits closely to the rocker (arrow). **Install only levers no. 9 with optimized kinematics. See note on p. 30-18.**

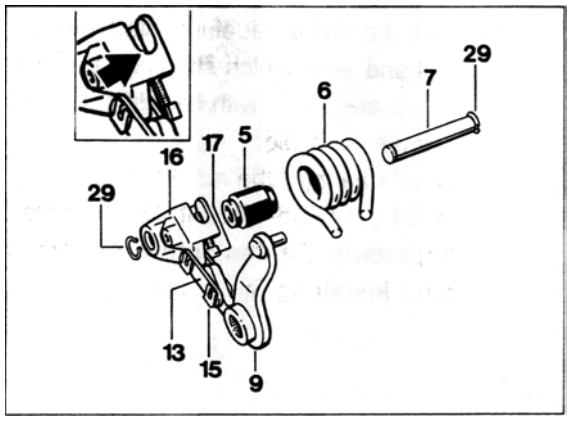

2364-30

4. Insert bearing sleeve no. 5, servo spring no. 6 and the assembly of lever no. 9 and rocker no. 16 into the mounting block. Insert and fasten shaft no. 7.

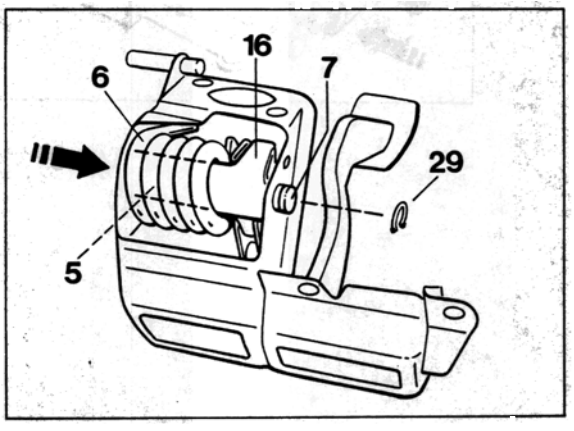

2365/1-30

5. To preload the servo spring, mount the brake pedal of the completed pedal system onto a vise **– using protective jaws.**

6. **Preload servo spring as follows:**
Use an appropriate spring tensioning tool, e.g. brake spring pincers by Hazet (Hazet no. 797), to preload the servo spring until an auxiliary tool (steel pin with 8 mm Ø) can be inserted into the bore of the rocker from the side.To protect the mounting block, use a liner when applying the pincers.

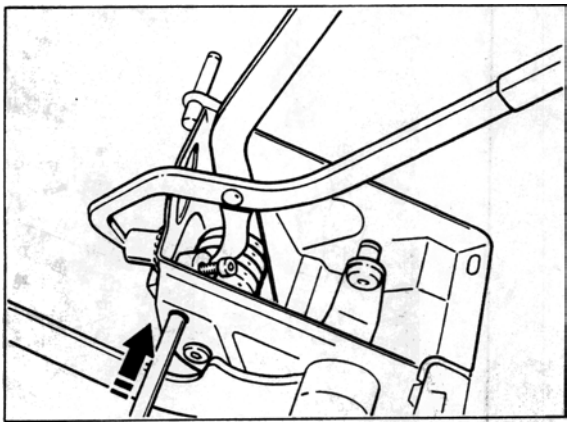

2366/1-30

7. Insert clutch pedal shaft with clutch pedal no. 2.
Fit lever no. 9 **in its correct position** to the clutch pedal shaft (notch on lever must face tooth gap of shaft).
Fit fastening nut no. 28.
Do not tighten fastening nut yet, (see next item).

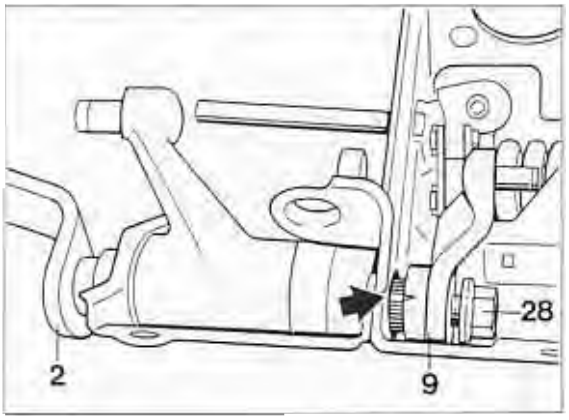

2367-30

8. Remove **auxiliary tool** (steel pin to preload servo spring) from rocker. To do so, move clutch pedal backwards (towards clutch position) **carefully and only slightly.** Remove the steel pin as soon as it is no longer under load.
   Then tighten fastening nut no. 28, tightening torque **34 Nm**.

Note

If the auxiliary tool (steel pin) is not removed with utmost care or if the fastening nut is tightened with the auxiliary tool still inserted, the rocker may get damaged in the area of the bore.

9. On vehicles with cruise control, install the microswitch.

10. Install the clutch master cylinder.
    On vehicles with cruise control, adjust the microswitch by sliding it into the proper position.
    The microswitch must be triggered (clicking sound) on the first few milimeters of pedal travel.

If the clutch master cylinder does not fit closely to the mounting block, rework the mounting block's contact surface using a plastic hammer.

11. When replacing the mounting block, re-install those parts of the old mounting block that are required.

12. Set adjustment screw of servo spring (no. 17) to the dimension of 6 mm (see page 30-13).

13. **Install** pedals **with the servo spring released partially** (clutch pedal in de-clutched position).

Important note

Then tighten screw of bearing tube (see item 2 on page 30-19).

14. Connect lines of hydraulic clutch system to clutch master cylinder. Bleed clutch system.

Note

Carry out adjustments, e.g. adjusting brake light switch, and inspections, e.g. limiting / adjusting pedal travel.
The adjustment jobs are described on pages 30-13 and 30-14.

34 35 27 Removing and refitting the transmission

Removing the transmission

Remove wire from starter and wire from reverse light switch.

2. Remove M 6 x 16 hexagon head bolt, bracket and mount cover. Pull out release lever shaft using an M 6 x 40 hexagon head bolt.

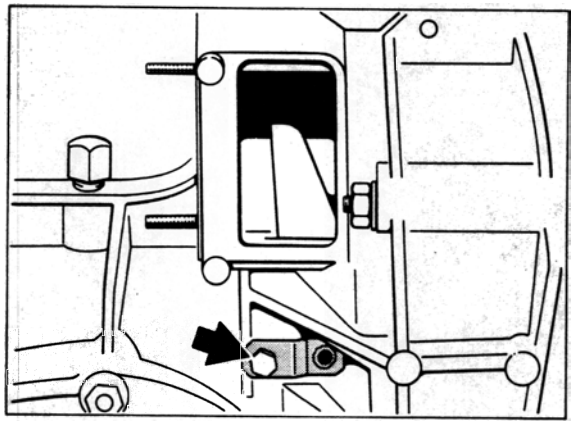

1391-10

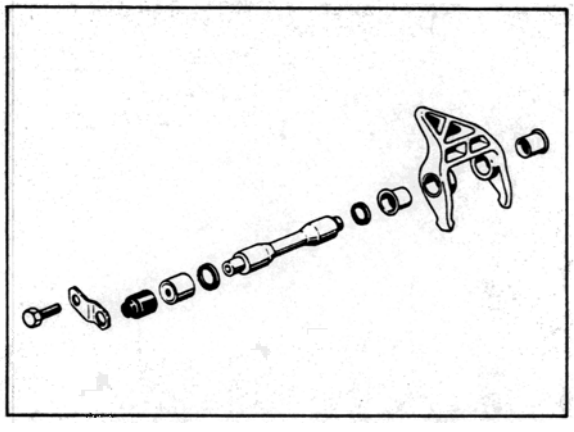

1388-10

3. Undo four fastening nuts and separate transmission from engine. Undo upper fastening nut from starter using Special Tool **P 119**.

Refitting the transmission

Note:

Apply a very thin coat of Olista Longtime 3 EP to input shaft splines (for corrosion protection only).

Engage release fork into release bearing and use a suitable length of adhesive tape to locate it provisionally in installation position.

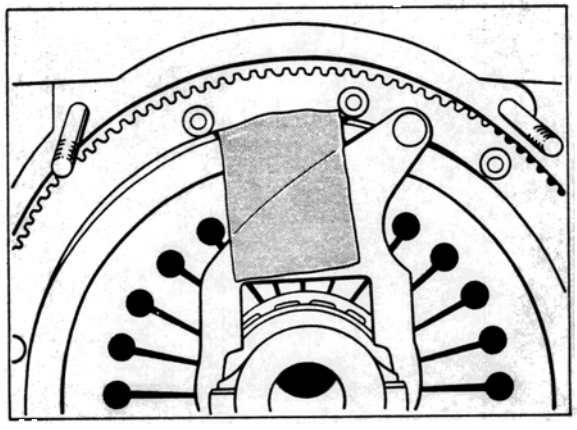

1390-10

2. Refit transmission to engine.

3. Engage release lever shaft with seals into release fork.

4. Remove locating tape from release fork across assembly hole.

5. Install needle-roller bearing, mount cover and bracket and tighten down with M 6 x 16 hexagon head bolt (also refer to assembly notes, Group 30, page 30 - 1).

34 35 37 Dismantling and assembling transmission

Tools

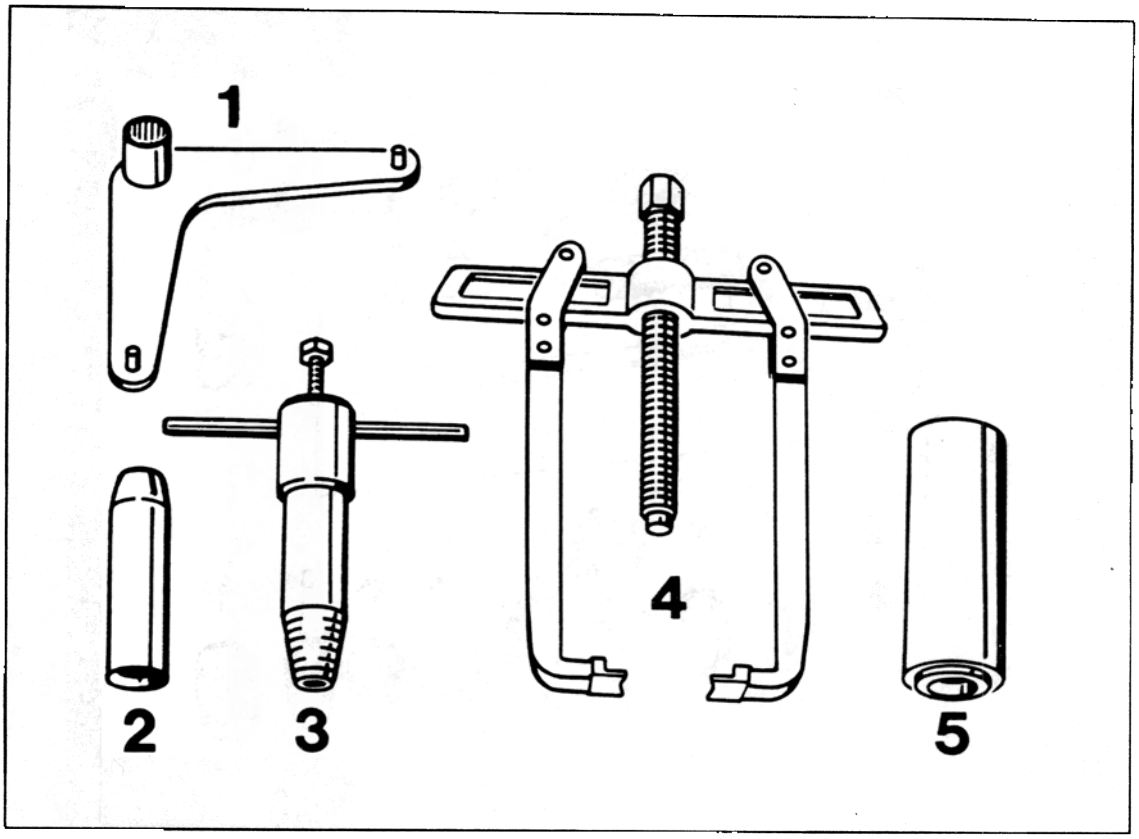

No.	Designation	Special tool	Order number	Explanation
1	Bracket	9253	000.721.925.30	
2	Assembling sleeve	9255	000.721.925.50	
3	Puller set	9251	000.721.925.10	
4	Puller	-	-	use arms of puller 9284
5	Pressure piece	9256	000.721.925.60	

34 35 37 Dismantling and assembling transmission

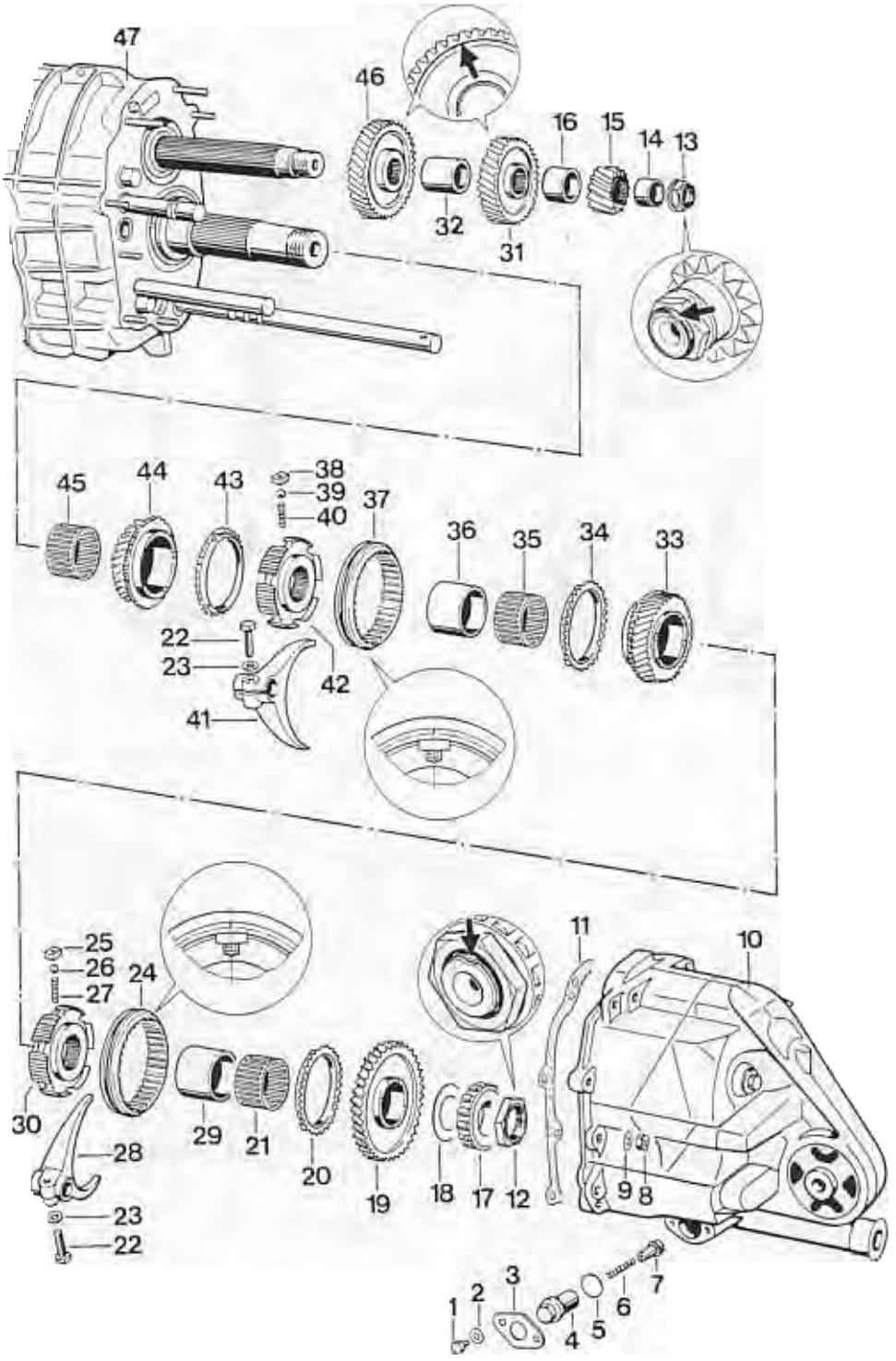

No.	Designation	Qty.	Note: Removal	Installation
1	Hexagon head bolt	2		Tighten to 10 Nm (7 ftlb.)
2	Washer	2		
3	Clamping plate	1		
4	Eccentric bushing	1		Adjust
5	Seal	1		Replace
6	Thrust spring	1		
7	Locking bushing	1		
8	Hexagon head nut	10		Tighten to 23 Nm (17 ftlb.)
9	Washer	10		
10	Front transmission cover	1		
11	Seal	1		Replace
12	Hexagon nut*	1	Lock input shaft with Special Tool 9253 and engage 6th gear	Tighten to 250 Nm (184 ftlb.). Upset flange to lock
13	Hexagon nut*	1	Lock input shaft with Special Tool 9253 and engage 6th gear	Tighten to 140 Nm (103 ftlb.). Upset flange to lock
14	Inner bearing race	1	Pull off across fixed gearwheel No. 15	Heat to approx. 120 °C
15	Fixed gear (reverse)	1		
16	Spacer sleeve	1		
17	Cylindrical roller bearing	1	Pull off across loose gearwheel No. 19	Heat to approx. 120 °C
18	Thrust washer	1		
19	Loose gearwheel (reverse)	1		
20	Synchronizer ring	1	Mark for reinstallation	Check for wear. Fit with the same gearwheel (cogs must face driver dogs)

No.	Designation	Qty.	Note: Removal	Installation
21	Needle bearing cage	1	Mark for reinstallation	Fit with the same gearwheel
22	Hexagon head bolt	2		Tighten to 23 Nm (17 ftlb.)
23	Washer	2		
24	Shift sleeve	1	Lift off along with shift fork No. 28. Take care not to lose synchromesh parts.	Center the centerpunch marks relative to the driver dogs. Offset side faces loose gearwheel No. 19
25	Driver dog	3		Domed end faces shift sleeve
26	Ball	3		
27	Spring	3		
28	Shift fork (reverse)	1		Adjust so that play is barely felt with reverse engaged. When neutral is engaged, the synchronizing ring must be able to rotate freely.
29	Inner race**	1	Pull off across guide sleeve No. 30	Heat to approx. 120 °C
30	Guide sleeve (with snap ring)	1		Open end of snap ring must not be located in the driver dog area. Install in correct position complete with shift sleeve and shift fork (snap ring faces loose gearwheel No. 33)
31	Fixed gearwheel (5th gear)	1		Identification groove faces fixed gearwheel No. 15. Do not confuse with fixed gearwheel No. 46

No.	Designation	Qty.	Note: Removal	Installation
32	Spacer sleeve	1		
33	Loose gearwheel (5th gear)	1		Do not confuse with loose gearwheel No. 44
34	Synchronizing ring	1	Mark for reinstallation	Check for wear. Fit with the same gearwheel (cogs face driver dogs)
35	Needle bearing cage	1	Mark for reinstallation	Fit with the same gearwheel
36	Inner race**	1	Mark for reinstallation. Pull off with arms of Special Tool 9284 across loose gearwheel No. 44	Fit with the same gearwheel. Heat to approx. 120 °C
37	Shift sleeve	1		Center the centerpunch marks relative to the driver dogs
38	Driver dog	3		Domed side faces shift sleeve
39	Ball	3		
40	Spring	3		
41	Shift fork (5th and 6th gears)	1		Adjust. In the neutral position, the shift sleeve must be set exactly in the middle between the loose gearwheels
42	Guide sleeve	1		Install complete with shift sleeve and shift fork

Printed in Germany - 20, 1997

No.	Designation	Qty.	Note: Removal	Note: Installation
43	Synchronizing ring	1	Mark for reinstallation	Check for wear. Fit with the same gearwheel (cogs face driver dogs)
44	Loose gearwheel (6th gear)	1		Do not confuse with loose gearwheel No. 33
45	Needle roller bearing cage	1	Mark for reinstallation	Fit with the same gearwheel
46	Fixed gearwheel (6th gear)	1		Identification groove faces fixed gearwheel No. 31. Do not confuse with fixed gearwheel No. 31
47	Transmission	1		

Transmission shafts without recesses for securing the hexagon nuts have been installed since September 1995.
Self-locking hexagon nuts are used on these shafts, and these nuts must **always** be replaced in every transmission repair.

** As a result of tolerances, the bearing inner rings (no. 29 and 36) may either form a force fit on the shaft or have a certain amount of play.

Dismantling and assembly notes

Note

If the shift rods are moved across the neutral or gear latching positions when the transmission is dismantled or assembled, the small intermediate locks (see page 35 - 13) may drop out inadvertently.

Dismantling

1. Engage 6th gear, lock input shaft with Special Tool **9253** and release hexagon head nuts for output and input shafts.

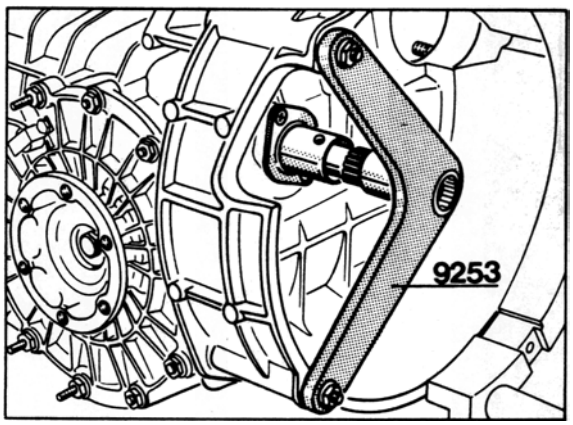

503-34

2. Engage fourth gear and pull off inner race of needle roller bearing (5th gear).

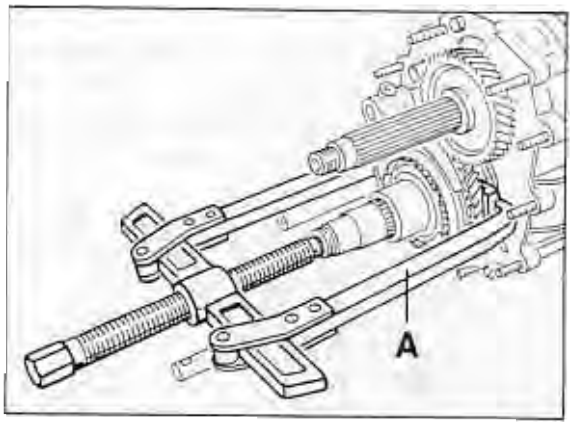

1641-34

A = Arms of puller 9284

Assembly

1. To check synchronizing rings, push rings onto the tapers of the gearwheels and measure gap "A" with a feeler gauge.

Installation dimension (new) = min. 0.9 mm
Wear limit = 0.6...0.7 mm

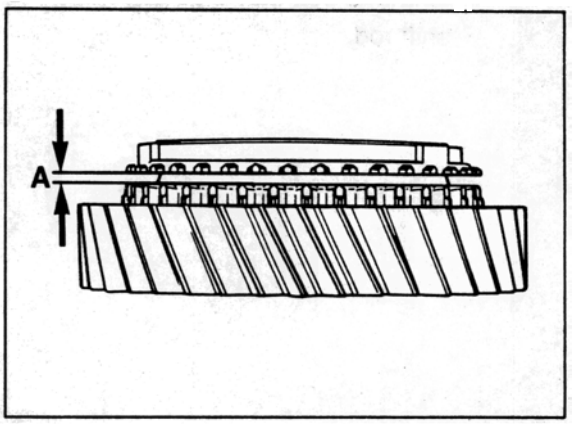

518-35

2. Engage fourth gear and fit all gearwheels.

3. Adjust inner shift rod until all gears may be preselected freely without notching. To adjust, undo hexagon head bolts of tensioning plate and rotate eccentric bushing.

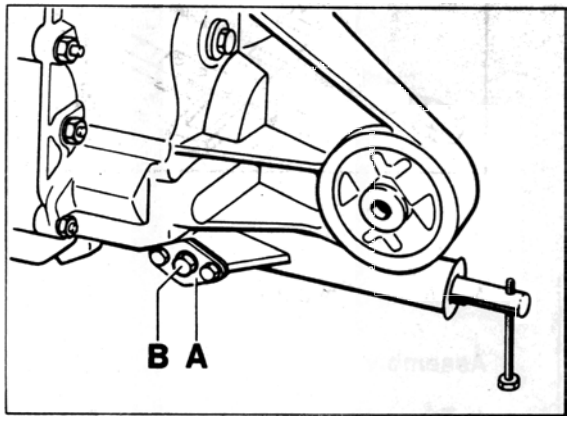

527-34

A = Tensioning plate
B = Eccentric bushing

4. To check, shift through all gears, using a long M 8 bolt that is screwed into the inner shift rod.

34 35 37 Dismantling and assembling transmission

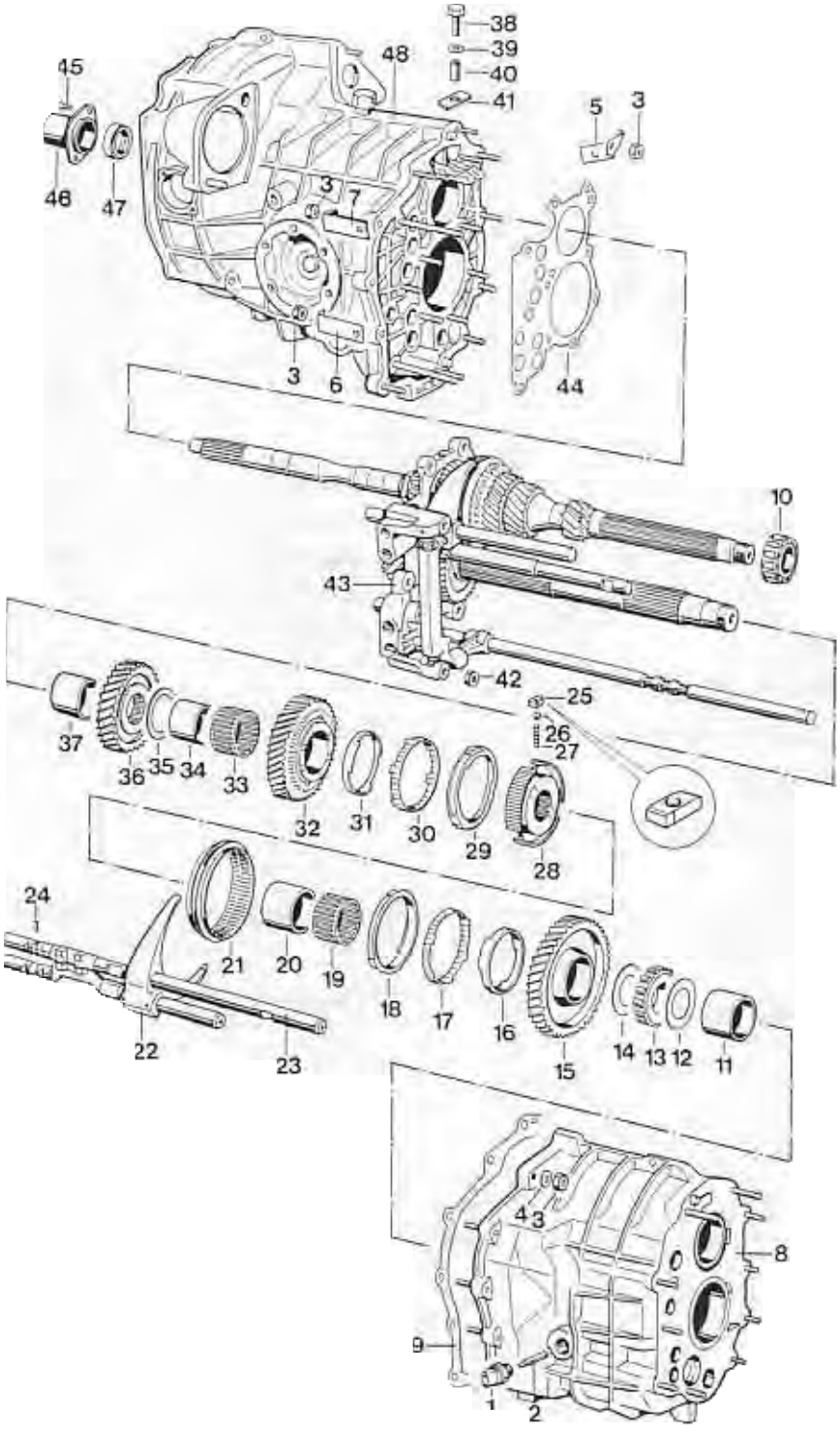

No.	Designation	Qty.	Note: Removal	Installation
1	Reverse light switch	1		Tighten to 35 Nm (26 ftlb.)
2	Plunger	1		Stepped end faces switch
3	Hexagon head nut	10		Tighten to 23 Nm (17 ftlb.)
4	Washer	10		
5	Retaining bracket	1		
6	Retaining bracket (straight)	1		
7	Retaining bracket (domed)	1		
8	Gear housing	1		
9	Gasket	1		Replace
10	Cylindrical roller bearing	1	Pull off	Heat to approx. 120 °C
11	Inner race	1	Mark for reinstallation. Pull off across loose gearwheel No. 15. Observe clearance at reverse shift rod	Fit with the same gearwheel. Heat to approx. 120 °C
12	Thrust washer	1		
13	Cylindrical roller bearing	1		Heat to approx. 120 °C
14	Thrust washer	1		
15	Loose gearwheel (1st gear)	1		
16	Friction ring	1	Mark for reinstallation	Fit with the same gearwheel
17	Tapered ring	1	Mark for reinstallation	Fit with the same gearwheel. Tabs must engage in the cutouts in the loose gearwheel

No.	Designation	Qty.	Note: Removal	Installation
18	Synchronizing ring	1	Mark for reinstallation	Check for wear. Fit with the same gearwheel. Drivers must engage in the cutouts in the tapered ring. Three lugs face driver dogs
19	Needle roller bearing		Mark for reinstallation	Fit with the same gearwheel
20	Inner race	1	Shift rods in neutral position. Pull out shift rod for reverse gear. Pull off across loose gearwheel No. 32. Mark for reinstallation.	Fit with the same gearwheel. Heat to approx. 120 °C
21	Shift sleeve	1		Insert complete with guide sleeve and shift rods. The missing tooth of the internal teeth of the guide sleeve (No. 28) must be aligned exactly above the oil bore of the output shaft.
22	Shift rod with pinned shift fork	1		
23	Shift rod (reverse)	1		
24	Spacer	1		Apply stiff grease to insert into shift rod
25	Driver dog	3		Place into correct position
26	Ball	3		
27	Spring	3		

No.	Designation	Qty.	Note: Removal	Installation
28	Guide sleeve	1		Missing tooth of internal teeth must be placed exactly above oil bore of output shaft
29	Synchronizing ring	1	Mark for reinstallation	Check for wear. Fit with the same gearwheel. Drivers must engage into the cutouts in the tapered ring. The lugs face the driver dogs.
30	Tapered ring	1	Mark for reinstallation	Fit with the same gearwheel. Tabs must engage into the cutouts in the loose gearwheel
31	Friction ring	1	Mark for reinstallation	Fit with the same gearwheel
32	Loose gearwheel (2nd gear)	1		
33	Needle roller bearing	1	Mark for reinstallation	Fit with the same gearwheel
34	Inner race	1	Mark for reinstallation. Pull off across fixed gearwheel No. 36	Fit with the same gearwheel. Heat to approx. 120 °C
35	Thrust washer	1		
36	Fixed gearwheel (3rd gear)	1		Large flange faces thrust washer No. 35
37	Spacer sleeve	1		
38	Hexagon head bolt (micro-sealed)	1		Must always be replaced. Tightening torque 6 Nm (4 ftlb.)
39	Washer	1		
40	Spacer sleeve	1		

No.	Designation	Qty.	Note: Removal	Installation
41	Retaining plate	1		
42	Hexagon head nut	10		Tighten to 23 Nm (17 ftlb.)
43	Tensioning plate with gear set	1		
44	Adjusting washer "S_3"	X	Note number and thickness for reinstallation	Redetermine thickness if required
45	Oval-head screw	2		Tighten to 10 Nm (7 ftlb.)
46	Guide tube	1		
47	Shaft seal	1	Refer to page 35 - 1	Do not fit until gear set has been fitted (refer to page 35 - 1)
48	Transmission housing	1		

Note

Due to the tolerances (transition fit), the inner bearing rings (nos. 11, 20 and 34) may have clearance or press-fit on the shaft.

Modifications to the synchromesh and the shift sleeve for 1st and 2n gear are described on page 35 - 14.

Dismantling and assembly notes

Dismantling

Note

To facilitate assembly, do not remove the complete gear set assembly but partially dismantle the installed drive pinion.

Assembly

1. The number of adjusting shims "S3" noted during dismantling or the number of adjusting shims noted when the drive pinion was adjusted should be placed onto the studs in the housing until the equivalent thickness is obtained.

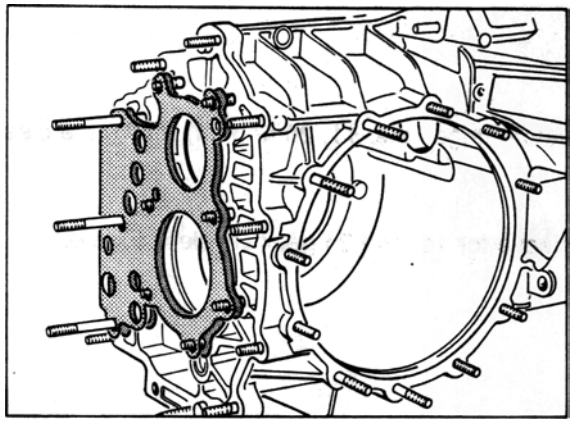

506-34

2. Fit fully assembled gear set complete with inner shift rod and tighten tensioning plate fastening nuts to **23 Nm** (17 ftlb.) (refer to page 35 - 7).

Note

Do not move shift rods across the neutral or gear stop position as this may cause the small spacers to drop out inadvertently (refer to page 35 - 13).

34 55 37 Dismantling and assembling front transmission cover

Tools

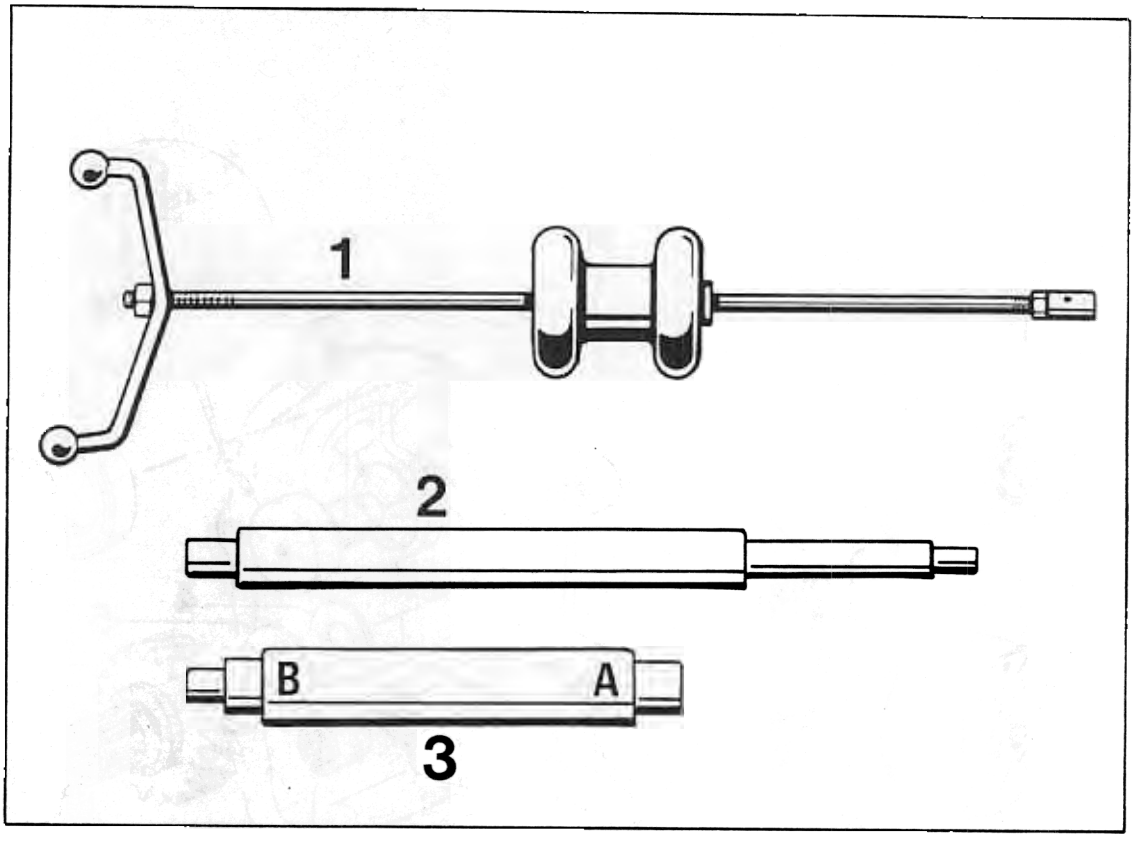

No.	Designation	Special tool	Order number	Explanation
1	Punch	VW 771		
2	Mandrel	9515	000.721.951.50	
3	Mandrel	9254	000.721.925.40	

Printed in Germany - 20, 1997

34 55 19 Dismantling and assembling front transmission cover

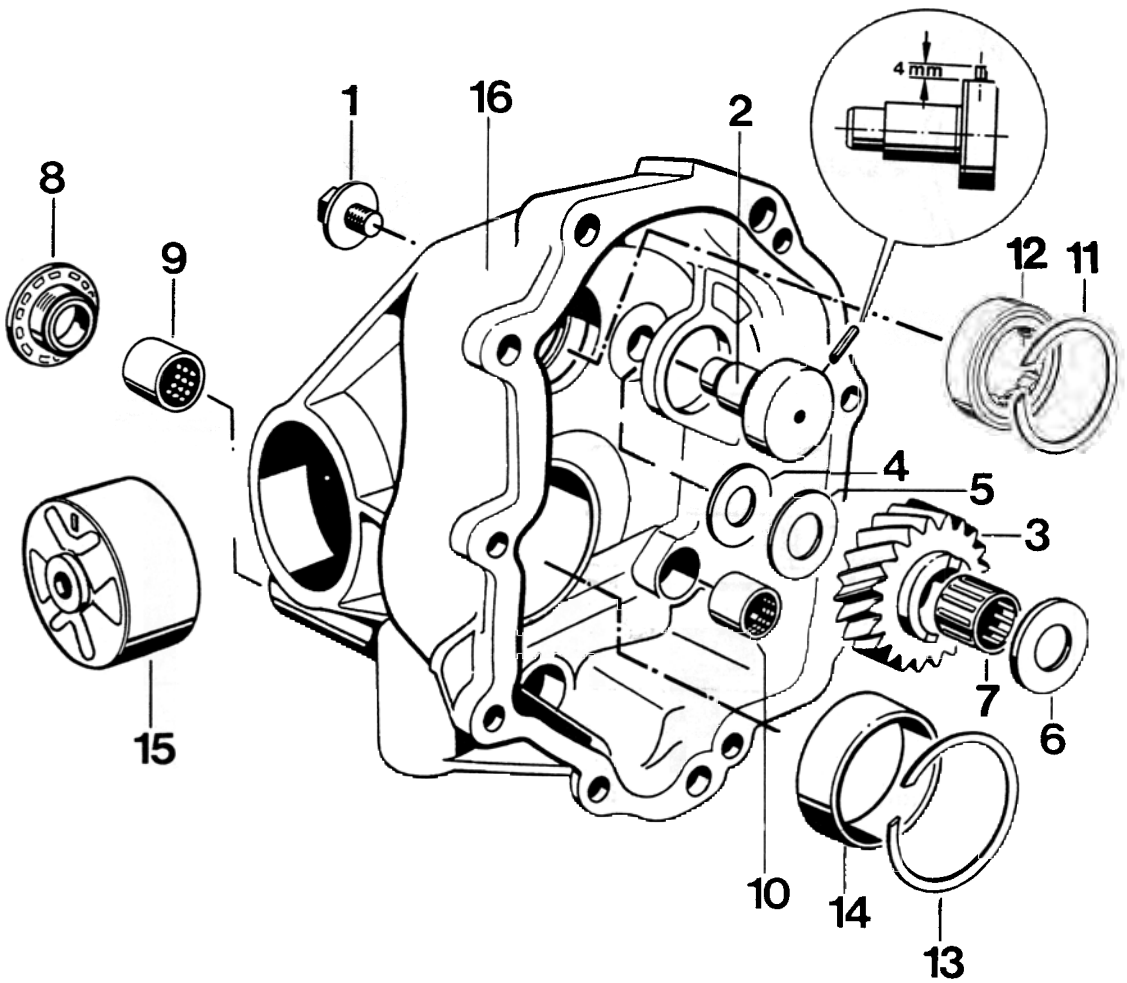

1649-34

No.	Designation	Qty.	Note: Removal	Installation
1	Hexagon-head bolt	1		Torque: 35 Nm (26 ftlb.)
2	Bolt with pin	1		Insert in correct position
3	Reverse idler gear	1		Small collar points towards hexagon-head bolt (no. 1)
4	Thrust washer (2.0 mm)	1		
5	Thrust washer (1.5 mm)	1		Do not confuse with washer no. 4
6	Thrust washer (1.5 mm)	1		Do not confuse with washer no. 4
7	Needle-roller assembly	1		
8	Shaft seal	1		Pack the area between dust lip and sealing lip with grease (e.g. Optimol HT2 + 2 EP); press in to stop with mandrel 9254 (p. A)
9	Ball sleeve (long)	1	Press out from the inside, using a suitable mandrel (e.g. 9515)	Press in to stop with Special tool 9254 (p. B)
10	Ball sleeve (short)	1	Pull out with a suitable internal puller (e.g. Schrem 14 - 20) and punch VW 771	Press in to stop with Special tool 9254 (p. A)
11	Retaining ring	1		
12	Cylindrical roller bearing	1	Pull out with suitable internal puller (e.g. Schrem 30 - 40)	Heat cover to approx. 120 °C and press in to stop
13	Retaining ring	1		

No.	Designation	Qty.	Note: Removal	Installation
14	Outer bearing race	1	Pull out with suitable internal puller (e.g. Schrem 50 - 60)	Heat cover to approx. 120 °C and press in to stop
15	Transmission bearing	1	Press out with suitable pipe section	Press in to correct position
16	Front transmission cover	1		

Notes on assembly

1. Press in ball sleeves, shaft seal and transmission bearing to correct position.

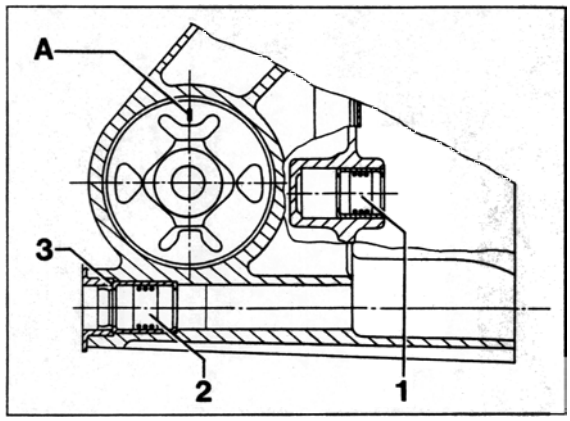

1642-34

1 - Short ball sleeve (press in flush)

2 - Long ball sleeve

3 - Shaft seal

A - Assembly mark (must point upwards)

2. Reassemble reverse idler gear with thrust washers and bolt in correct position (refer to exploded view). With thrust washers and bolt located correctly, the end clearance of the reverse idler gear is 0.15...0.35 mm.

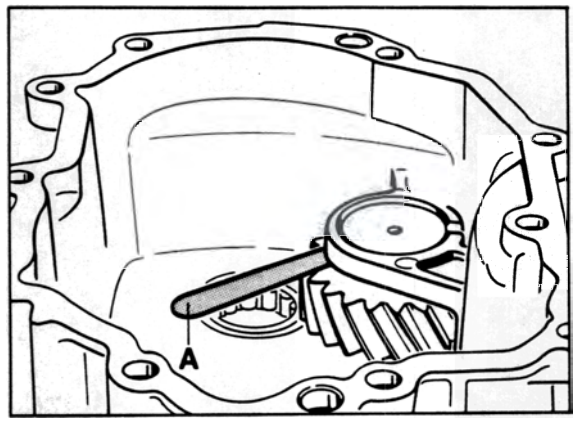

520-34

A = Feeler gauge

3. Check end clearance of reverse idler gear with feeler gauge.

34 52 37 Dismantling and assembling gear housing

Tools

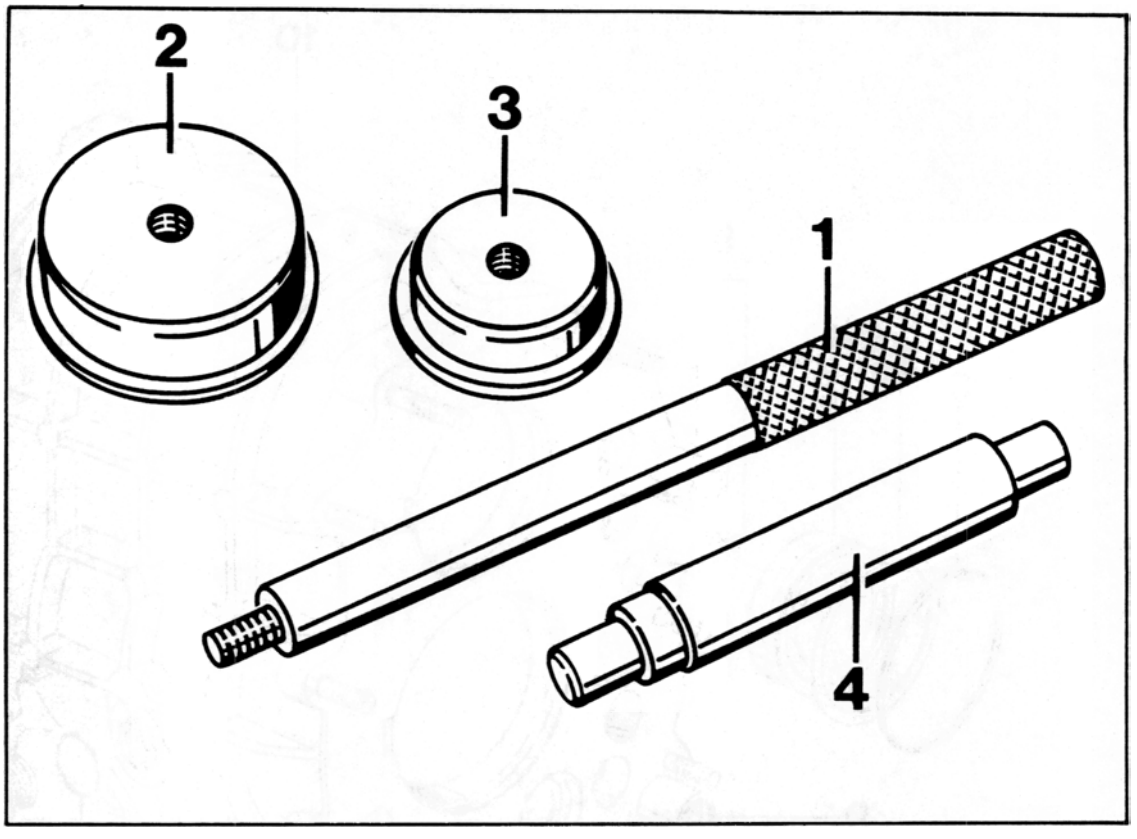

No.	Designation	Special tool	Order number	Explanation
1	Mandrel	P 254	000.721.254.00	
2	Thrust piece	P 254 a	000.721.254.10	
3	Thrust piece	P 254 b	000.721.254.20	
4	Mandrel	9254	000.721.925.40	

34 52 37 Dismantling and assembling gear housing

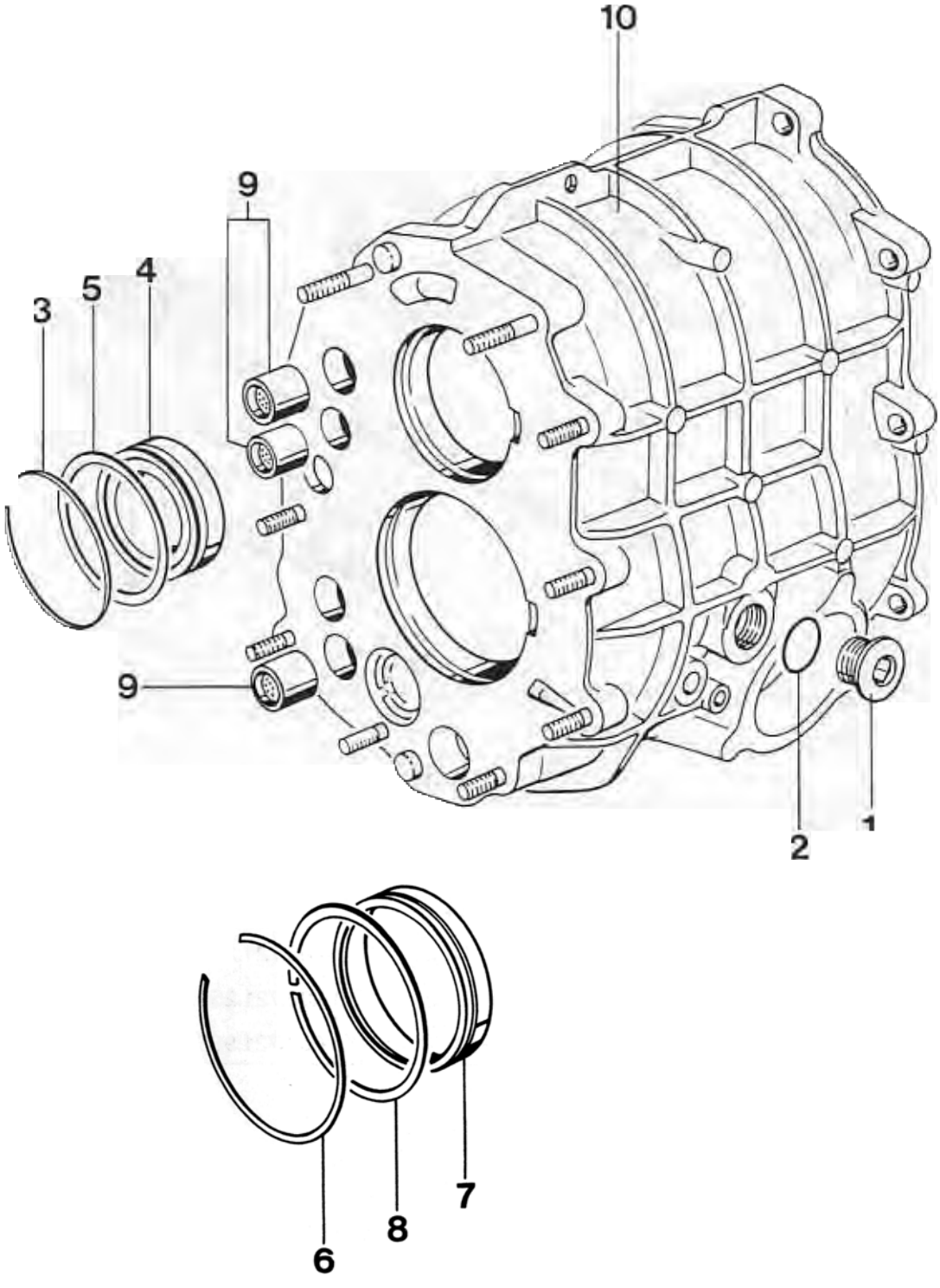

No.	Designation	Qty.	Note: Removal	Installation
1	Plug	1		Torque: 30 Nm (22 ftlb.)
2	Seal	1		Replace
3	Retaining ring	1		
4	Bearing outer race	1	Working from inside, press out with Special Tools P 254 and P 254 b	Press in with Special Tools P 254 and P 254 b
5	Snap ring	1		
6	Retaining ring	1		
7	Bearing outer race	1	Working from inside, press out with Special Tools P 254 and P 254 b	Press in with Special Tools P 254 and P 254 b
8	Snap ring	1		
9	Ball sleeve	3	Press out with suitable mandrel	Press in flush with Special Tool 9254
10	Gear housing	1		

34 37 37 Dismantling and assembling transmission housing

Tools

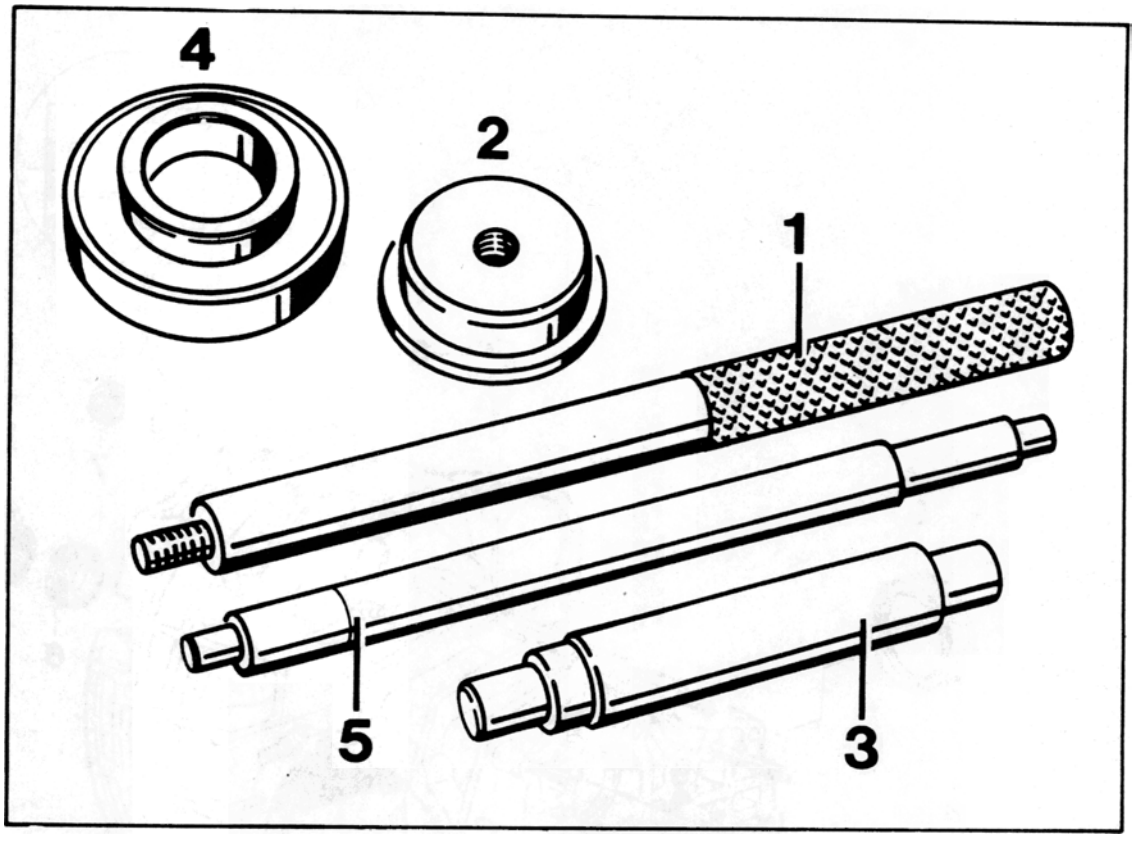

No.	Designation	Special tool	Order number	Explanation
1	Mandrel	P 254	000.721.254.00	
2	Thrust piece	P 254 b	000.721.254.20	
3	Mandrel	9254	000.721.925.40	
4	Thrust piece	9252	000.721.925.20	
5	Mandrel	9515	000.721.951.50	

34 37 37 Dismantling and assembling transmission housing

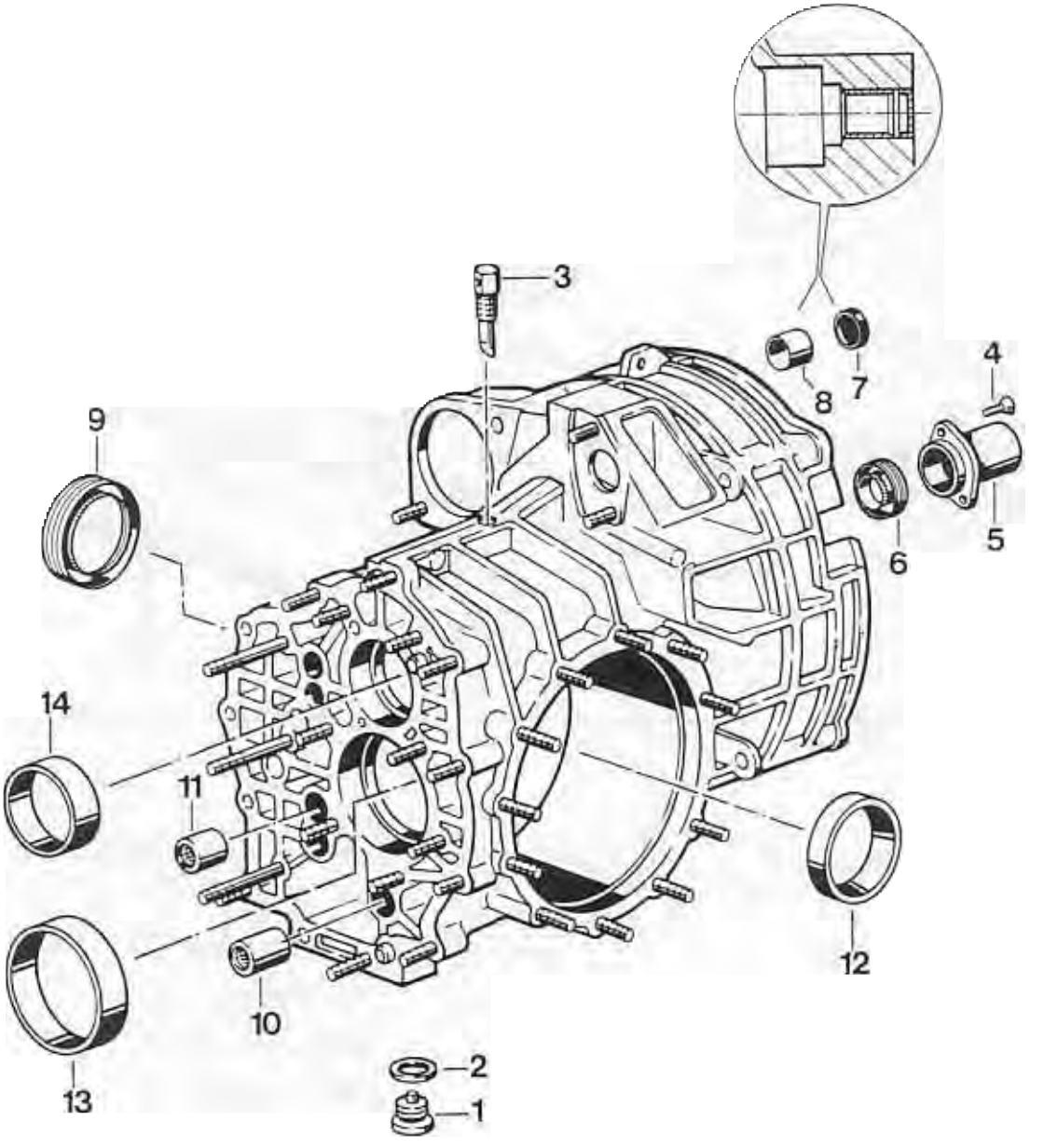

No.	Designation	Qty.	Note: Removal	Installation
	Plug	1		Clean, tighten to 30 Nm (22 ftlb.)
2	Seal	1		Replace
3	Vent	1		Tighten to 35 Nm (26 ftlb.). The hole in the hexagon head must face the front transmission cover
4	Oval-head screw	2		Tighten to 10 Nm (7 ftlb.
5	Guide tube			
6	Shaft seal	1		Do not fit until the gear set has been fitted (also refer to page 35 - 1)
7	Cover	1		
8	Bushing	1	Push out with drift 9515, working from inside towards outside	Do not grease or oil and do not clean with solvents (e.g. benzene). Push in from inside with drift 9515 until it is seated against the stop.
9	Shaft seal			Push in with Special Tool 9252 until it is seated against the stop. Pace space between dust lip and sealing lip with grease (e.g. Optimol HT2 + 2EP)
10	Ball sleeve (long)	1	Pull out with suitable internal puller (e.g. Schrem 14 - 20)	Press in flush with Special Tool 9254
11	Ball sleeve (short)	4	Pull out with suitable internal puller (e.g. Schrem 14 - 20)	Press in flush with Special Tool 9254

No.	Designation	Qty.	Note: Removal	Installation
12	Bearing outer race	1	Heat transmission housing to approx. 120 °C and remove race with suitable drift	Heat transmission housing to approx. 120 °C and press in with suitable thrust piece
13	Bearing outer race	1	Heat transmission housing to approx. 120 °C and remove race with suitable thrust piece (e.g. VW 513)	Heat transmission housing to approx. 120 °C and press in with suitable thrust piece (e.g. 9247/4) until it is seated against the stop
14	Bearing outer race	1	Heat transmission housing to approx. 120 °C and pull put with suitable internal puller (e.g. Schrem 50 - 60)	Heat transmission housing to approx. 120 °C and press in with Special Tools P 254 and P 254 b until it is seated against the stop
15	Transmission housing	1		

34 Adjusting gear shift

1. Set the shift lever to the neutral position. The lever will automatically move to the 3rd/4th gear plane (no adjustment possible).

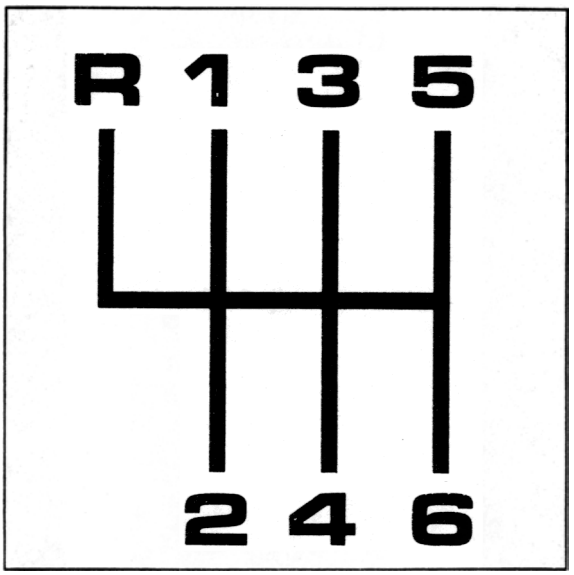

2049A-34

2. If the gearshift is correctly adjusted, there should be no longitudinal inclination on the lower part of the lever, which is curved at the top. The lower 90° part should be at right angles to the central tube or transmission tunnel.

3. Checking the adjustment: shift through all the gears. whichever gear is selected, there must be about the same space between the front and rear consoles.

4. If necessary, correct the adjustment on the ball of the adjustable guide tube (arrow). One turn of the ball corresponds to a change of about 3 to 5 mm in the angle of the shift lever.
Caution: When tightening the lock nut, make sure that you do not twist the balls in relation to each other.

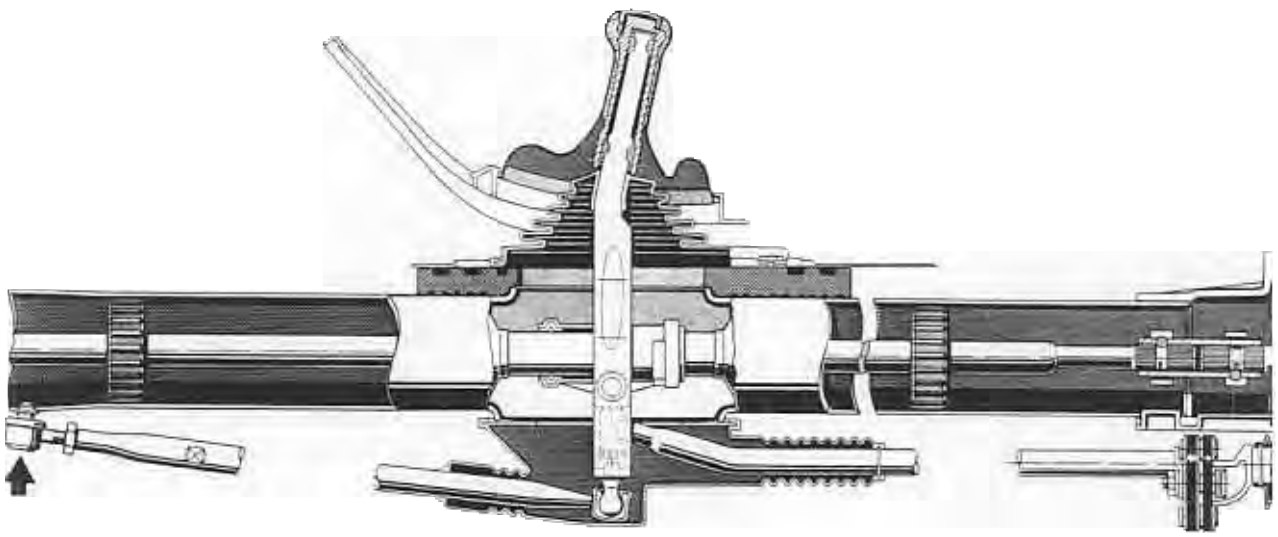

Drawing 644A shows the four-wheel drive version. On the rear-wheel drive version, the ball of the guide tube (arrow) is installed on a transverse strut attached to the front axle cross member.

35 50 19 Removing and installing input shaft oil seal

Removing

1. Remove engine/transmission assembly and separate transmission from engine.

2. Remove release bearing guide tube.

3. Screw Special Tool **9251** firmly into the oil seal.

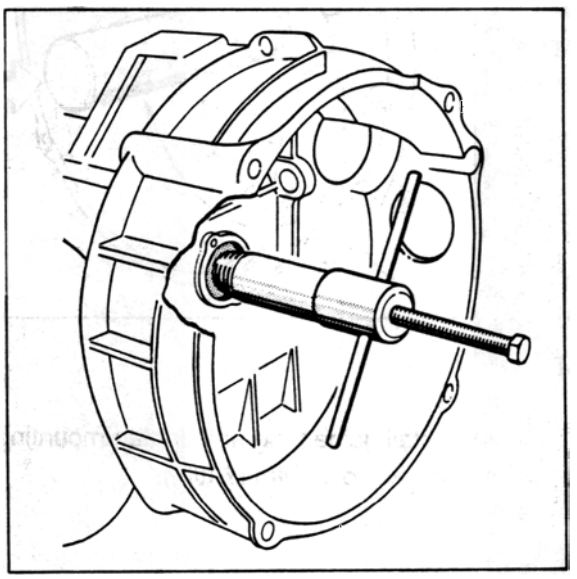

1652-34

4. Screw in the hexagon-head bolt and pull out oil seal.

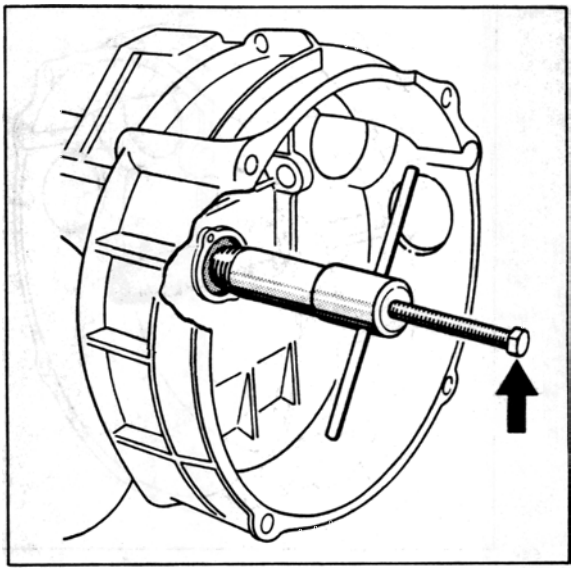

1653-34

Note

If the helical tension spring jumps out when removing the seal, use a wire hook to pull it off the input shaft.

Installing

1. Push assembling sleeve **9255** onto the input shaft splines.

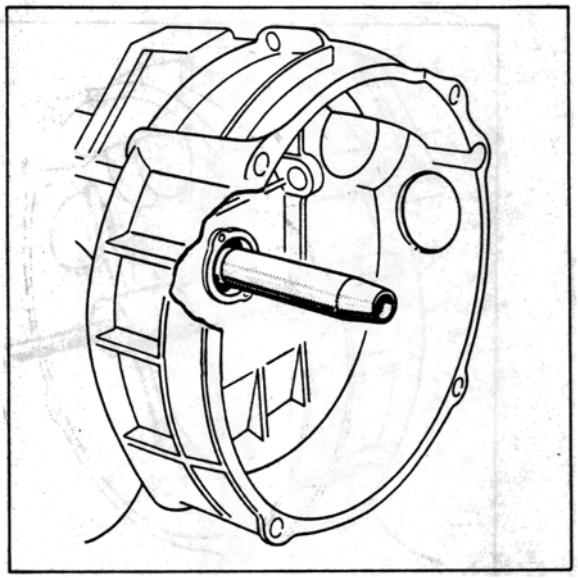

1654-34

2. Pack oil seal area between dust lip and sealing lip with grease (e.g. Optimol HT 2 + 2 EP).

3. Use Special Tool **9256** to drive the oil seal into place.

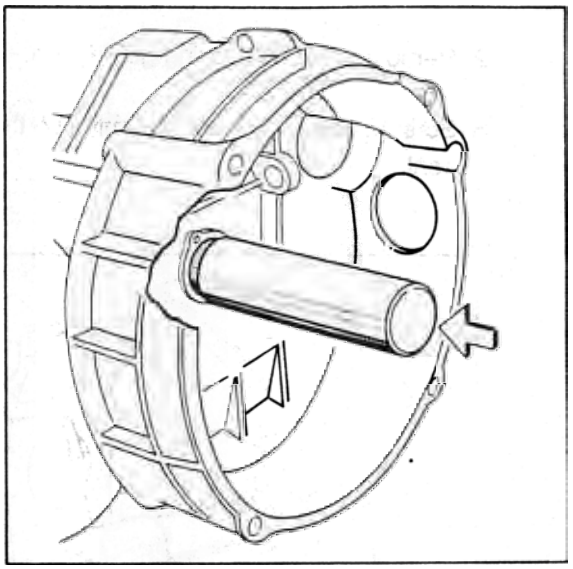

1655-34

4. Install guide tube and tighten mounting screws to **10 Nm** (7 ftlb.).

35 19 37 Dismantling and assembling tensioning plate

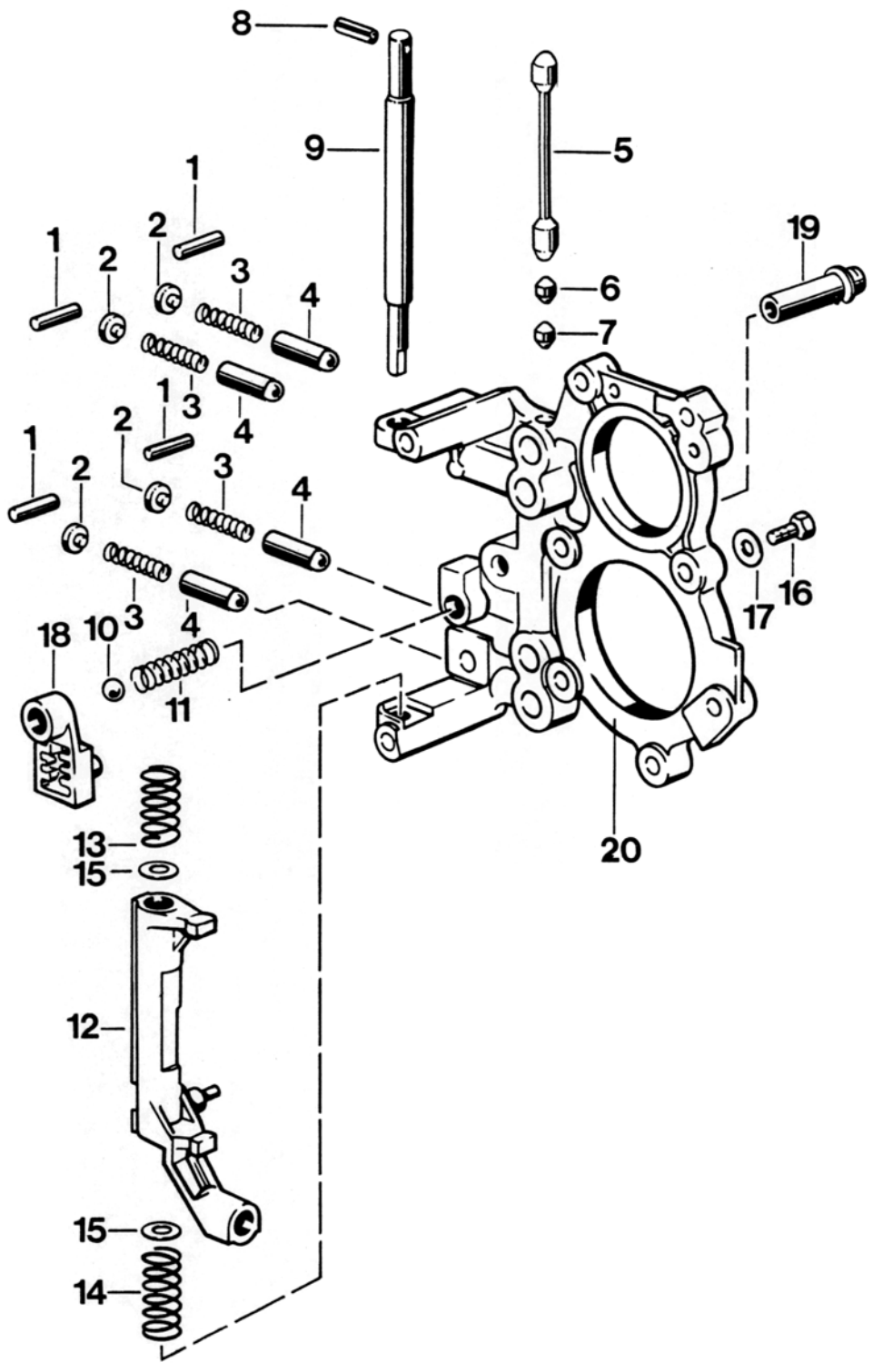

No.	Designation	Qty.	Note: Removal	Installation
1	Straight pin	4	With the shift rods fitted, the springs (No. 3) are under load	
2	Washer	4		
3	Thrust spring	4		
4	Locking bush	4		
5	Lock (long)	1		
6	Lock (short)	1		
7	Lock (short)	1		
8	Roll pin	1		
9	Bearing shaft	1		Install in correct position, use 8 mm dia. locating mandrel to locate relative to tensioning plate hole
10	Ball	1		
11	Thrust spring	1		
12	Deflection lever	1		
13	Thrust spring	1	Mark for reinstallation	Free length = 51.3 + 0.5 mm wire thickness = 1.5 mm. Do not cnfuse with spring No. 14
14	Thrust spring	1	Mark for reinstallation	Free length = 72.6 + 0.5 mm wire thickness = 1.1 mm. Do not confuse with spring No. 13
15	Shim	2		

No.	Designation	Qty.	Note: Removal	Installation
16	Hexagon head bolt	1		Tighten to 10 Nm (7 ftlb.)
17	Washer	1		
18	Selector gate	1		
19	Adapter sleeve with snap ring	1	Press out with suitable drift	Press in with suitable drift until it is seated against the stop
20	Tensioning plate	1		

Installation position of the locks

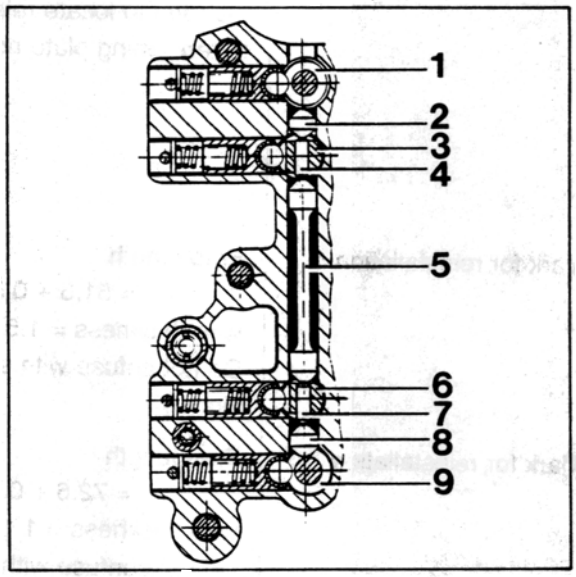

1709-35

35 40 19 Removing and installing input shaft

Tools

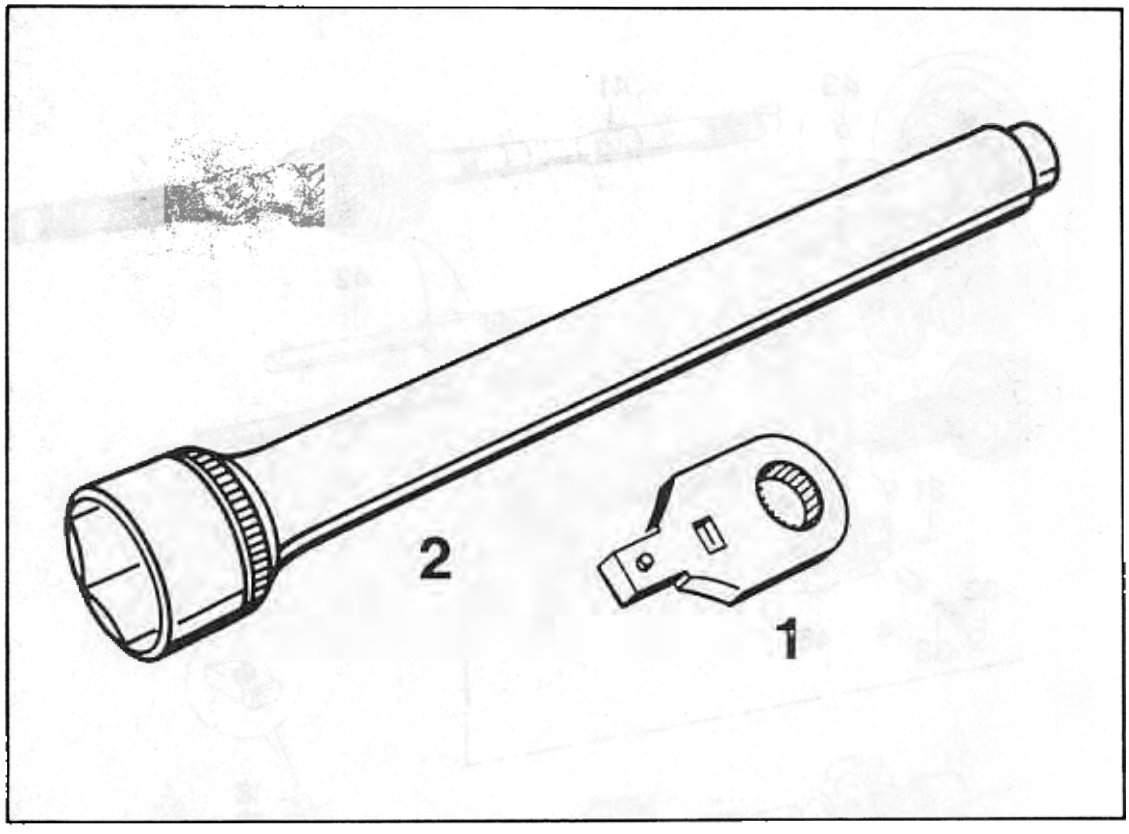

No.	Designation	Special tool	Order number	Explanation
1	Insert	9282	000.721.928.20	
2	Socket	9105	000.721.910.50	

35 40 19 Removing and installing input shaft

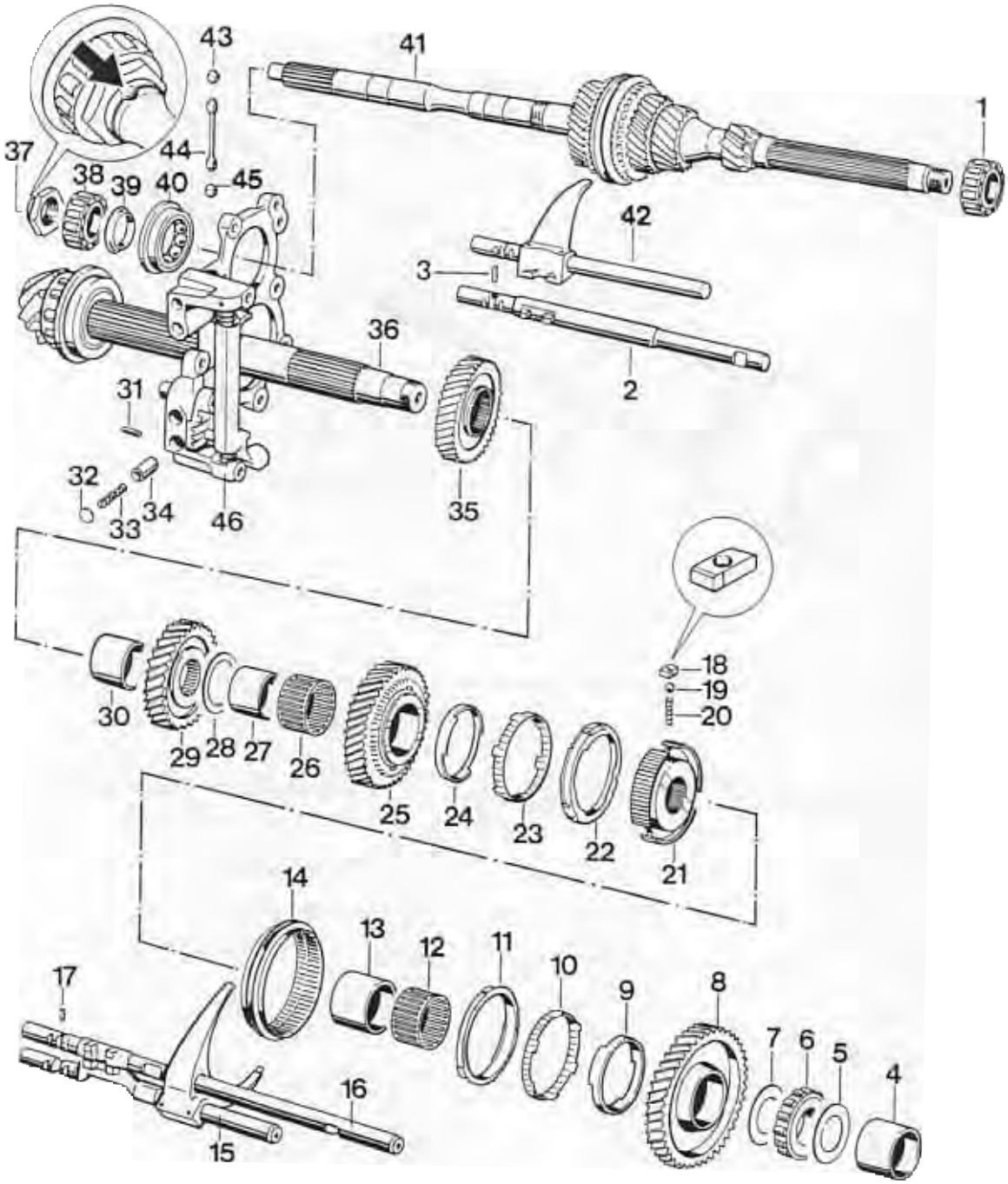

No.	Designation	Qty.	Note: Removal	Installation
1	Cylindrical roller bearing	1		Heat to approx. 120 °C
2	Shift rod (5th and 6th gear)	1	Shift rods in neutral position	
3	Spacer	1		Coat with stiff grease to insert
4	Inner race	1		Fit with the same gearwheel. Heat to approx. 120 °C
5	Thrust washer	1		
6	Cylindrical roller bearing	1		Heat to approx. 120 °C
7	Thrust washer	1		
8	Loose gearwheel (1st gear)	1		
9	Friction ring*	1		Fit with the same gearwheel
10	Tapered ring	1		Fit with the same gearwheel. Tabs must engage into the cutouts in the loose gearwheel
11	Synchronizing ring*	1		Check for wear. Fit with the same gearwheel. Drivers must engage in the cutouts in the tape-red ring. Three lugs face the driver dogs.
12	Needle roller bearing	1		Fit with the same gearwheel
13	Inner race	1		Fit with the same gearwheel. Heat to approx. 120 °C

* see page 35 - 14

No.	Designation	Qty.	Note: Removal	Installation
14	Shift sleeve*	1		Insert complete with guide sleeve and shift rods. Make sure the missing tooth of the internal teeth of the guide sleeve (No. 21) is aligned exactly above the oil bore of the output shaft.
15	Shift rod with pinned shift fork	1		
16	Shift rod (reverse)	1		
17	Intermediate lock	1		Coat with stiff grease to insert
18	Driver dog	3		Install in correct position
19	Ball	3		
20	Spring	3		
21	Guide sleeve	1		Missing tooth of the internal splines must be exactly above the oil bore of the output shaft
22	Synchronizing ring*	1		Check for wear. Fit with the same gearwheel. Drivers must engage into the cutouts in the tapered sleeve. Three lugs face the driver dogs.

* see page 35 - 14

No.	Designation	Qty.	Note: Removal	Installation
23	Tapered ring	1		Fit with the same gearwheel. Tabs must engage into the cutouts in the loose gearwheel
24	Friction ring	1		Fit with the same gearwheel
25	Loose gearwheel (2nd gear)	1		
26	Needle roller bearing	1		Fit with the same gearwheel
27	Inner race	1		Fit with the same gearwheel. Heat to approx. 120 °C
28	Thrust washer	1		
29	Fixed gearwheel (3rd gear)	1		Large collar faces thrust washer No. 35
30	Spacer sleeve	1		
31	Straight pin	4		
32	Washer	4		Guide lug faces spring
33	Thrust spring	4		
34	Latch	4		
35	Fixed gearwheel (4th gear)	1		Large collar faces four-point bearing
36	Output shaft	1		
37	Flange nut**	1	Undo with Special Tools 9282 and 9105	Tighten to 250 Nm (184 ftlb.). Upset the flange to lock
38	Cylindrical roller bearing	1	Press off across 2nd gear fixed gearwheel	Heat to approx. 120 °C
39	Bearing inner race	1		Heat to approx. 120 °C

No.	Designation	Qty.	Note: Removal	Installation
40	Four-point bearing	1		
41	Output shaft	1		Insert complete with pinned shift rod / shift fork (No. 42)
42	Shift rod with pinned shift fork	1		
43	Lock (short)	1		
44	Lock (long)	1		
45	Lock (short)	1		
46	Tensioning plate	1		

** Transmission shafts without recesses for securing the hexagon nuts have been installed since Spetember 1995.
Self-locking hexagon nuts are used on these shafts, and these nuts must **always** be replaced in every transmission repair.

Removal and installing notes

Removal

Note

Parts No. 1 to 30 are removed with the tensioning plate remaining fitted (refer to page 34 - 11).

Installation

Using a suitable flat iron bar, clamp tensioning plate in a vise in such a manner that the hole for the shift rod locks is horizontal.

2. Check synchromesh of 1st and 2nd gears. To do so, place friction ring, tapered ring and synchronizing ring in correct position onto gearwheel. Check gap "A" with a feeler gauge.
   Old design:
   installation dimension (new) =
   1.3 to 1.95 mm
   wear dimension = 1.0 mm
   New design:
   installation dimension (new) = 1.5 to 2.0 mm
   wear dimension = 1.2 mm
   (see page 35 - 14)

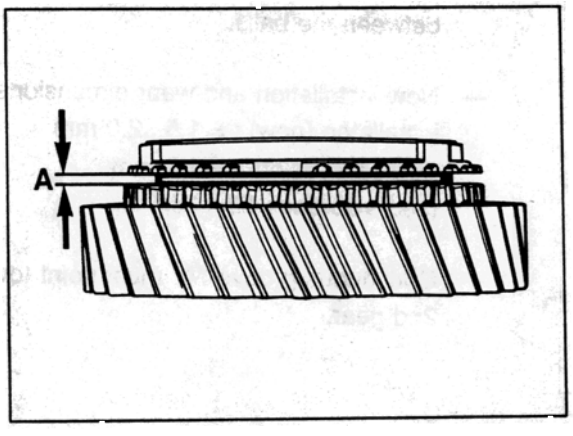

1701-35

3. Observe installation position of locks.

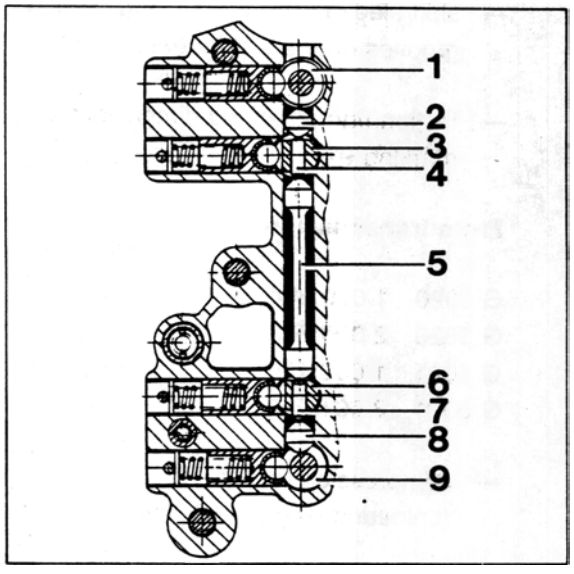

1709-35

1 = Shift rod 3rd and 4th gear
2 = Lock (short)
3 = Shift rod 5th and 6th gear
4 = Intermediate lock
5 = Lock (long)
6 = Reverse shift rod
7 = Intermediate lock
8 = Lock (short)
9 = Shift rod 1st and 2nd gear

Note

After fitting the shift rods, do not move them across the neutral or gear latch positions as this may cause the small intermediate locks to drop out inadvertently.
To avoid inadvertent movement of the shift rods, lock shift rods by engaging 4th gear.

Modified synchromesh on 1st and 2nd gear

The following parts have been modified:

shift sleeve (with three plunge-milled grooves on the inside teeth).

— friction ring (changed dimensions and marking 94)

From transmission no.:

G 5020 1 000 884
G 5020 2 000 883
G 5021 1 002 186
G 5021 2 001 230

compression spring
(unloaded length 16.22 mm)

From transmission no.:

G 5020 1 000960
G 5020 2 000927
G 5021 1 002238
G 5021 2 001294

Shift sleeve

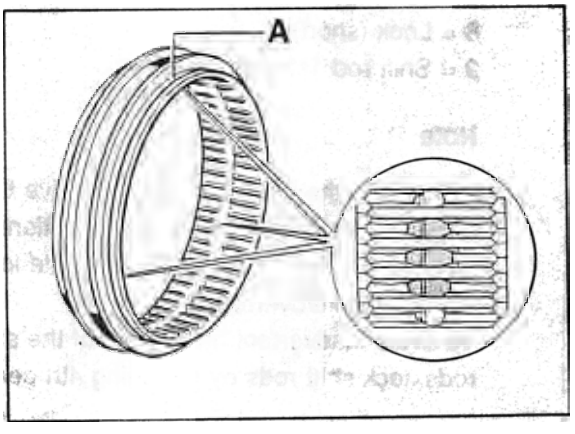

A = distinctive groove (must point towards 2nd gear)

1905-35

Friction ring

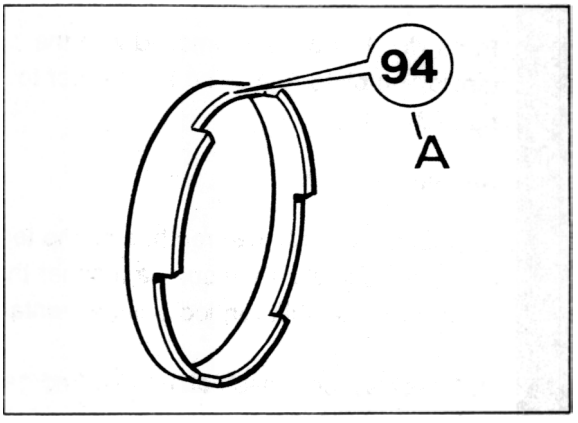

1904-35

A = marking

Note

Old and new parts must **not** be installed together in the same transmission. As only the modified parts are now available, all the modified parts must be installed in the event of repair work. The following points must be noted:

Install the shift sleeve on the guide sleeve with the punch marks "B" centered between the balls.

— New installation and wear dimensions
installaton (new) = 1.5...2.0 mm
wear dimension = 1.2 mm
(see also page 35 - 13)

— Continuous groove "A" must point towards 2nd gear.

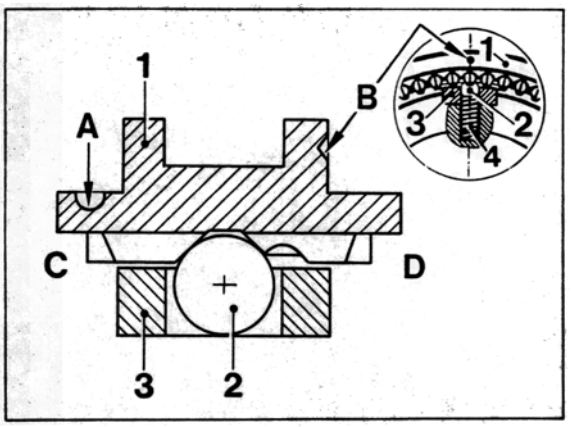

1906-35

1 = shift sleeve
2 = ball
3 = driver dog
4 = spring
A = groove
B = punch mark
C = 2nd gear side
D = 1st gear side

35 40 37 Dismantling and assembling input shaft

Tools

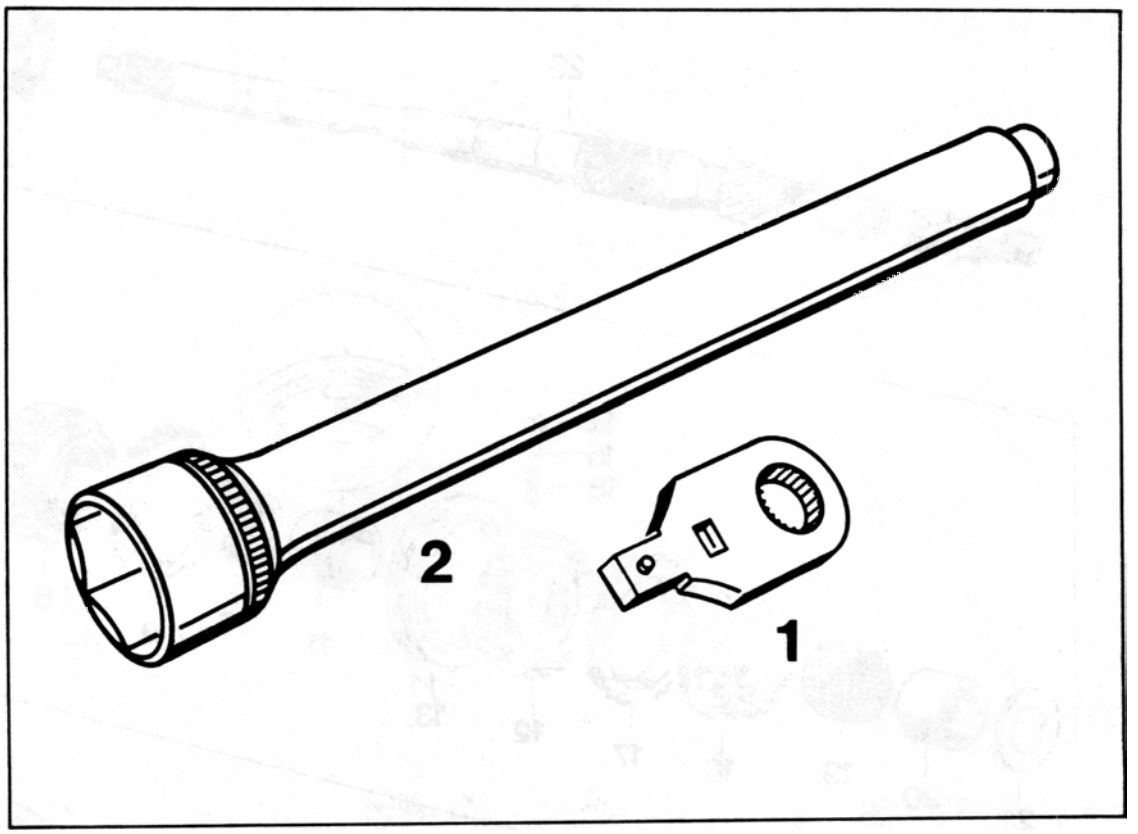

No.	Designation	Special tool	Order number	Explanation
1	Insert	9282	000.721.928.20	
2	Socket	9105	000.721.910.50	

35 40 37 Dismantling and assembling input shaft

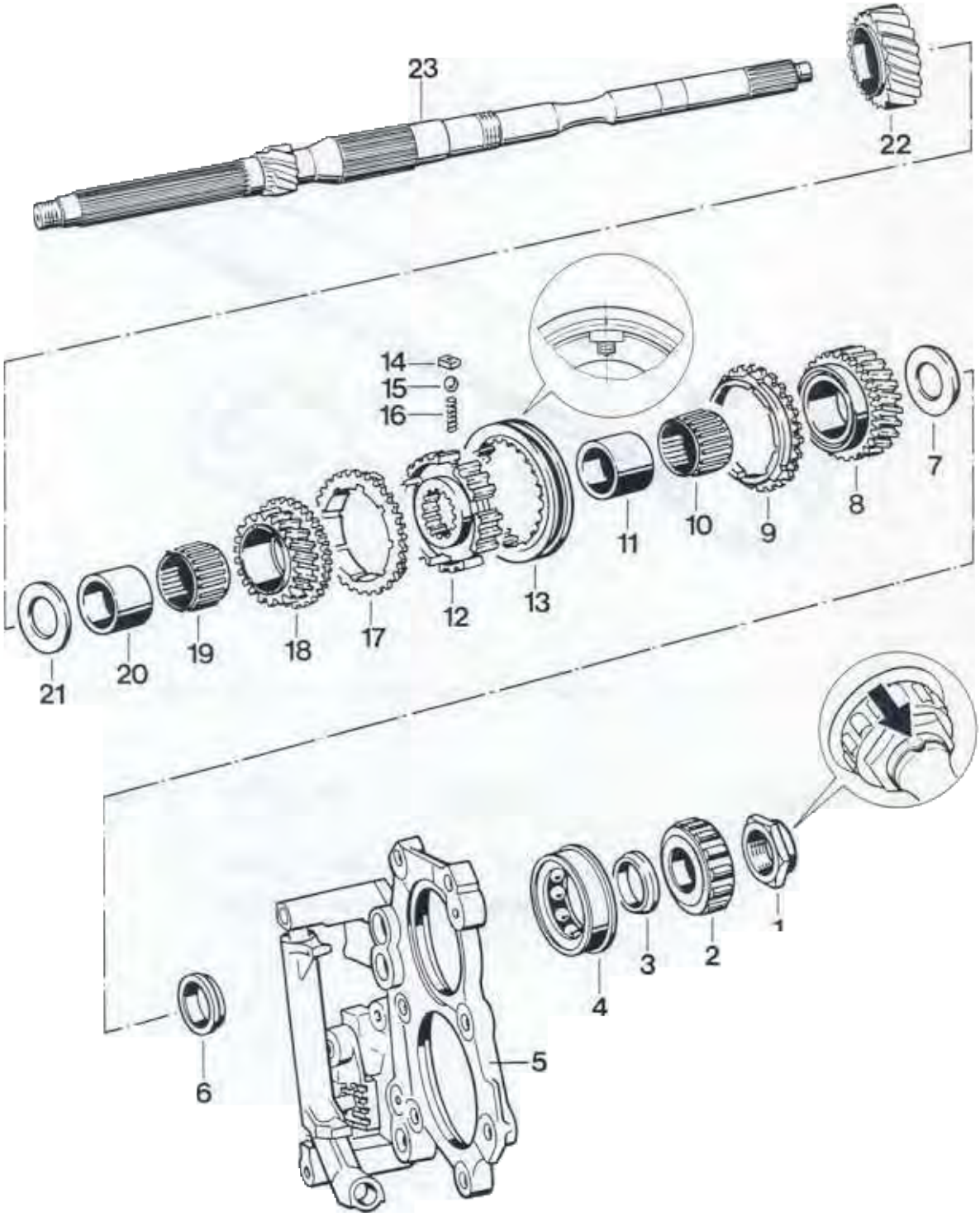

No.	Designation	Qty.	Note: Removal	Installation
1	Hexagon head nut (see note on Page 35 - 19)	1	Undo with Special Tools 9282 and 9105	Use Special Tools 9282 and 9105 and tighten to 250 Nm (184 ftlb.). Upset flange to lock
2	Cylindrical roller bearing	1	Press off with suitable separating device (e.g. Kukko 17-1) across 2nd gear fixed gearwheel	Heat to approx. 120 °C
3	Bearing inner race	1	Press off with suitable separating device (e.g. Kukko 17-1) across 2nd gear fixed gearwheel	Heat to approx. 120 °C
4	Four-point bearing	1		
5	Tensioning plate	1		Clamp in a vise (use protective jaws), insert lock (long), engage 5th gear and install input shaft with pinned shift rod/shift fork
6	Bearing inner race	1	Press off with suitable separating device (e.g. Kukko 17-1)	Heat to approx. 120 °C
7	Thrust washer	1		Large, face-ground side faces needle cage
8	Loose gearwheel (4th gear)	1		Replace only in pairs
9	Synchronizing ring	1	Mark for reinstallation	Check for wear, install in correct position using the same gearwheel (lugs face the driver dogs)

Printed in Germany - 20, 1997

No.	Designation	Qty.	Note: Removal	Installation
10	Needle-roller assembly	1	Mark cage	Install with the same gear-wheel
11	Inner race	1		Heat to approx. 120 °C
12	Guide sleeve	1	Remove complete with shift sleeve	Install complete with shaft sleeve and synchro-mesh components
13	Shift sleeve (3rd and 4th gear)	1	Make sure synchromesh components do not pop out.	Observe installation position, install complete with guide sleeve and synchro-mesh components. Center the centerpunch marks relative to the driver dogs
14	Driver dogs	3		Install in correct position, domed side faces shift sleeve
15	Ball	3		
16	Spring	3		
17	Synchronizing ring	1	Mark for reinstallation	Check for wear, install in correct position with the same gearwheel (lugs face the driver dogs)
18	Loose gearwheel (3rd gear)	1		Replace only in pairs
19	Needle-roller assembly*	1	Mark for reinstallation	Fit with the same gear-wheel
20	Inner race*	1		Heat to approx. 120 °C and press into place
21	Thrust washer (1.85 mm thick)*	1		
22	Fixed gearwheel (2nd gear)*	1	Press off with suitable separating device (e.g. Kukko 17-0)	Replace only in pairs. Flange faces gearwheel of 1st gear
23	Input shaft	1		

* See note on page 35 - 19

Dismantling and assembling notes

Note

Since 1 October 1994, the fixed wheel of second gear (no. 22) has been firmly fixed to the drive pinion; the needle cage (no. 19) runs directly on the polished shaft. The thrust washer (no. 21) and the inner ring (no. 20) are no longer fitted.

Dismantling

1. Mount retaining plate **9282** in vise, fit input shaft and undo hexagon-head nut with Special Tool **9105**.

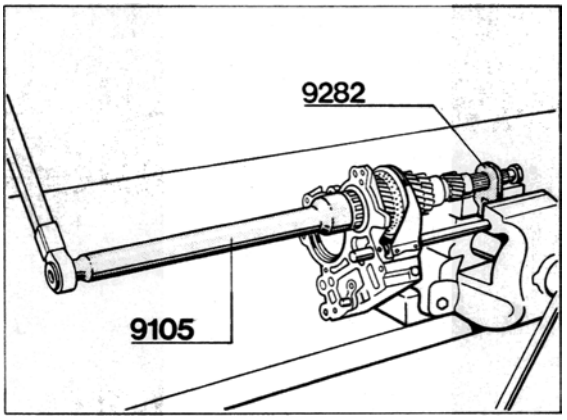

535-35

2. Use a suitable tool (e.g. Kukko 17 - 1) to press all parts off the input shaft over the 2nd gear wheel.

Assembling

1. To inspect synchronizing rings, press rings onto the gear wheel tapers and use a feeler gauge to measure gap "A".

Assembly dimension (new)	= 0.9 mm min.
Wear limit	= 0.6 to 0.7 mm

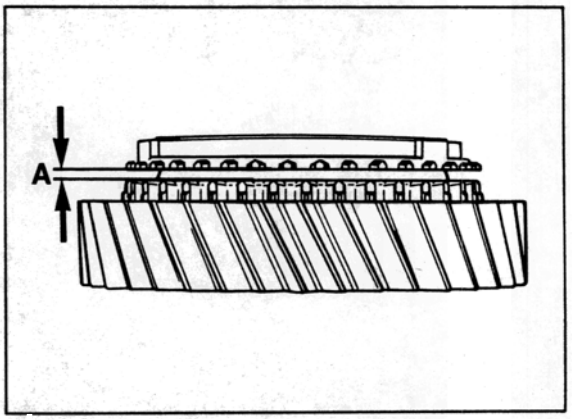

518-35

Note

Transmission shafts without recesses for securing the hexagon nuts have been installed since September 1995.

Self-locking hexagon nuts are used on these shafts, and these nuts must **always** be replaced in every transmission repair.

Printed in Germany - 20, 1997

35 59 37 Dismantling and assembling output shaft

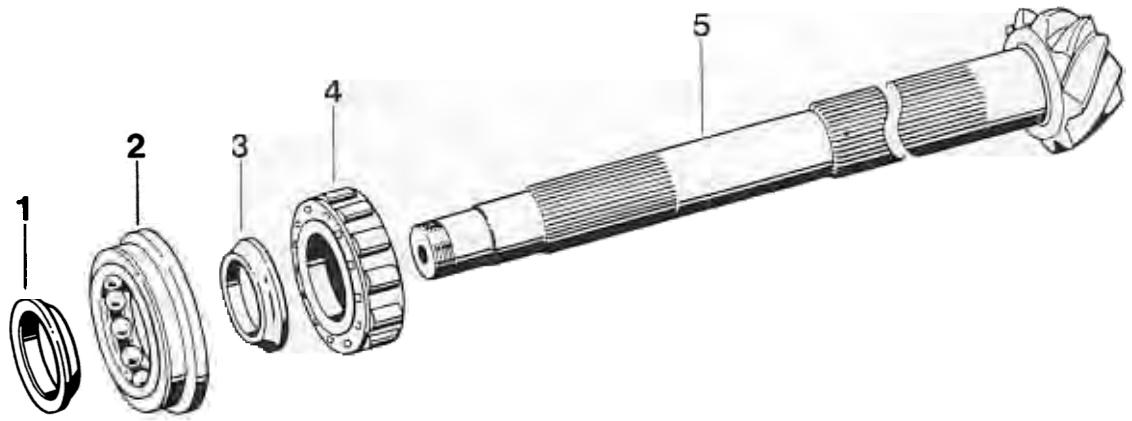

1698-35

No.	Designation	Qty.	Note: Removal	Installation
1	Bearing inner race	1	Mark for reinstallation, press off with suitable separating device (e.g. Kukko 15 - 17)	Do not confuse with inner race No. 3 , heat to approx. 120 °C and press into place
2	Four-point bearing	1		
3	Bearing inner race	1	Mark for reinstallation, press off with suitable separating device (e.g. Kukko 15 - 17)	Do not confuse with inner race No. 1, heat to approx. 120 °C and press into place
4	Cylindrical roller bearing	1	Press off with suitable separating device (e.g. Kukko 15 - 17)	Heat to approx. 120 °C and press into correct position using a suitable pipe section (e.g. VW 519)
5	Output shaft	1		Observe matching number. Readjust if required

35 75 19 Removing and installing 5th gear (transmission is installed)

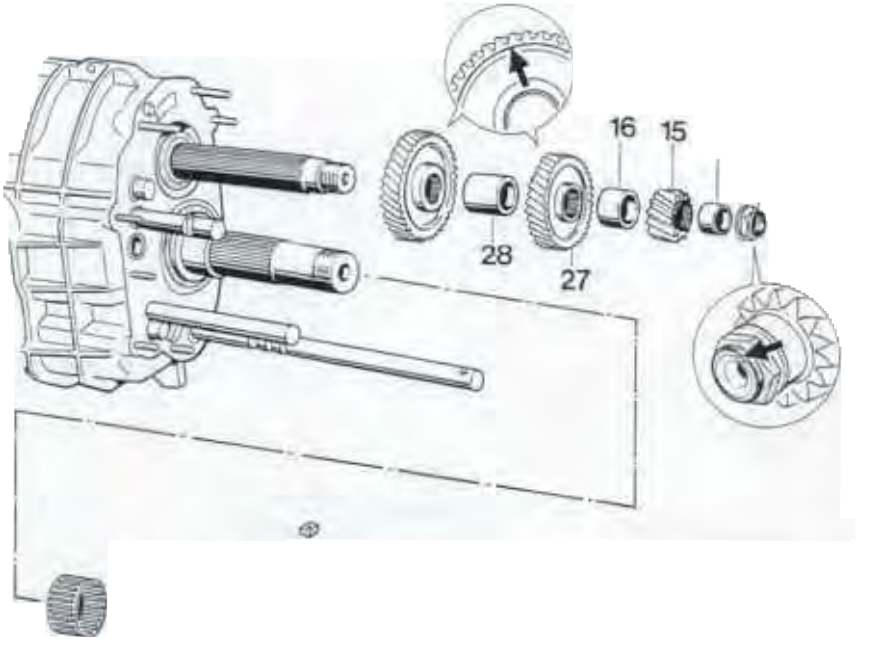

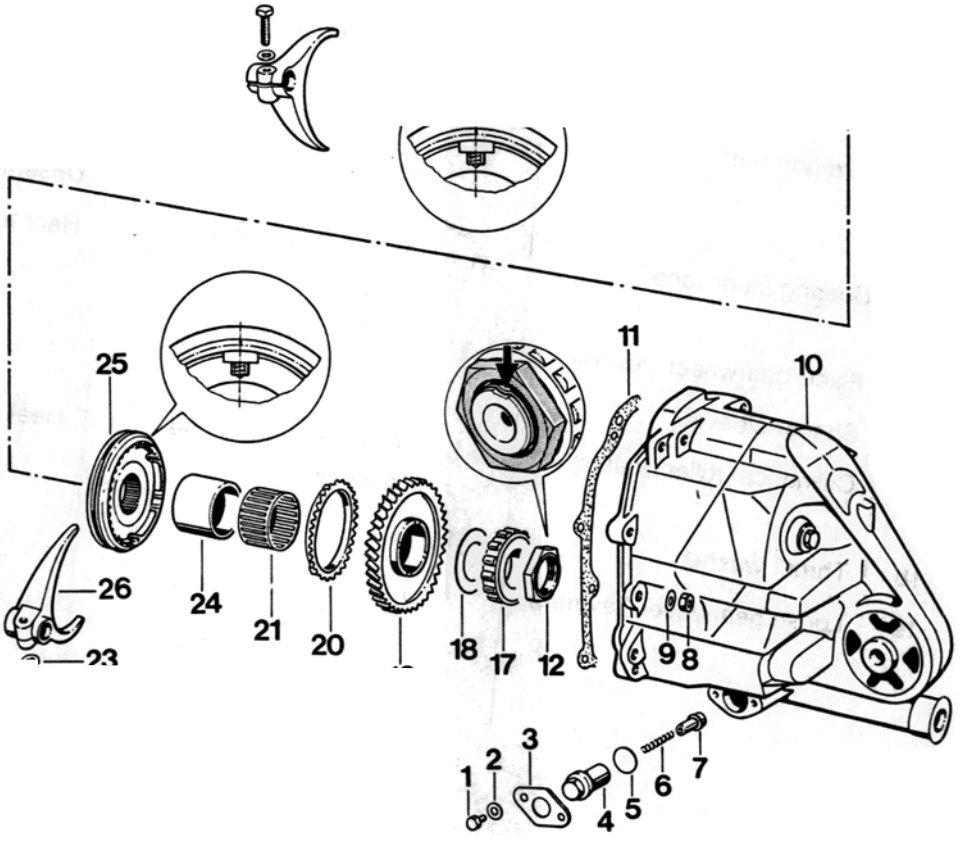

No.	Designation	Qty.	Note: Removal	Installation
1	Hexagon-head bolt	2		Tighten to 10 Nm (7 ftlb.)
2	Washer	2		
3	Clamping plate	1		
4	Eccentric bushing	1		Adjust
5	Seal	1		Replace
6	Thrust spring	1		
7	Locking bush	1		
8	Hexagon head nut	10		Tighten to 23 Nm (17 ftlb.)
9	Washer	10		
10	Front transmission cover	1	Remove complete with transmission support	
11	Gasket	1		Replace
12	Hexagon nut*	1	Engage 4th gear and apply handbrake	Replace. Tighten to 300 Nm (221 ftlb.). Upset flange to lock
13	Hexagon nut*	1	Engage 4th gear and apply handbrake	Replace. Tighten to 200 Nm (147 ftlb.). Upset flange to lock
14	Bearing inner race	1	Pull off across fixed gearwheel No. 15	Heat to approx. 120 °C
15	Fixed gearwheel (reverse)	1		
16	Spacer sleeve	1		
17	Cylindrical roller bearing	1	Pull off across loose gearwheel No. 19	Heat to approx. 120 °C
18	Thrust washer	1		
19	Loose gearwheel (reverse)	1		

No.	Designation	Qty.	Note: Removal	Installation
20	Synchronizing ring	1	Mark for reinstallation	Check for wear. Fit with the same gearwheel (Cogs face driver dogs)
21	Needle cage	1	Mark for reinstallation	Fit with the same gearwheel
22	Hexagon-head bolt	1	Determine installation position of shift fork, measuring from shift rod face to shift fork stop and record measurement.	Tighten to 23 Nm (17 ftlb.)
23	Washer	1		
24	Inner race	1	Remove, press off across guide sleeve if required and pull off with a suitable puller.	Heat to approx. 120 °C.
25	Shift and guide sleeve	1	Engage 4th gear and take off carefully complete with shift fork. Take care not to lose synchromesh components.	Install in correct position. The stepped side of the shift sleeve faces loose gearwheel No. 19
26	Shift fork (reverse)	1		Adjust so that play at shift sleeve is barely noticeable with reverse engaged. The synchronizing ring must rotate freely in neutral position.
27	Fixed gearwheel (5th gear)	1		Identification groove for fixed gearwheel No. 15
28	Spacer sleeve	1		
29	Loose gearwheel (5th gear)	1		

No.	Designation	Qty.	Note: Removal	Installation
30	Synchronizing ring	1	Mark for reinstallation	Check for wear. Fit with the same gearwheel. Cogs face driver dogs.
31	Needle-roller cage	1	Mark for reinstallation	Fit with the same gearwheel.

* Transmission shafts without recesses for securing the hexagon nuts have been installed since September 1995.
Self-locking hexagon nuts are used on these shafts, and these nuts must **always** be replaced in every transmission repair.

Removal and assembly notes

Removal

1. Remove engine guard and rear underside panel.

2. Drain transmission oil.

3. Remove crossbrace.

4. Disengage shift rod coupling from inner shift rod.

5. Support transmission on general-purpose transmission jack and unbolt transmission support from body.

6. Lower engine-transmission assembly only so far that the assembly will **not** rest on the stabilizer bar.

7. Determine installation position of reverse shift fork for reinstallation, measuring dimension "A" with depth gauge.

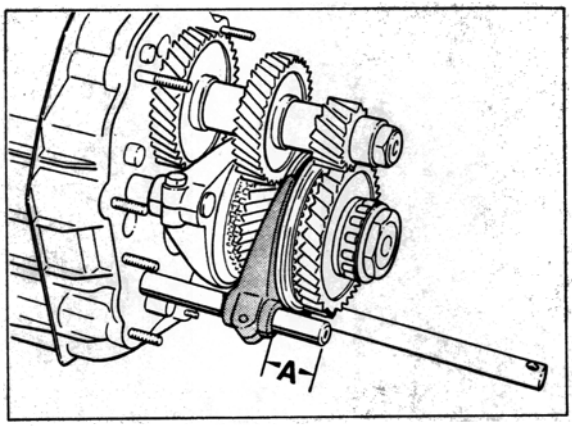

1791-35

Installation

1. Tighten hexagon head nuts of drive pinion and input shaft to specified torque and lock the nuts.

2. Adjust reverse shift fork to the dimension "A" determined during removal and check adjustment (refer to explosion drawing No. 26).

3. Adjust inner shift rod so that all gears can be selected freely without binding. To achieve this, undo hexagon-head bolts of clamping plate and turn eccentric bushing.

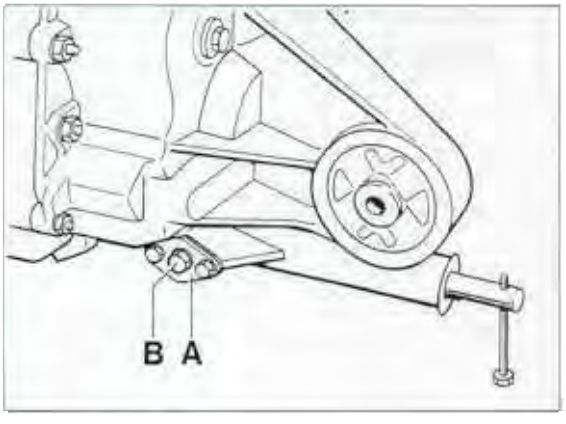

527-34

A = Clamping plate
B = Eccentric bushing

4. Screw a long M 8 bolt into the inner shift rod and shift through all gears to check operation.

5. Place engine-transmission assembly onto general-purpose transmission jack and raise into installation position. Attach transmission support to body (M_A = 46 Nm / 34 ftlb.).

Note

Check engine compartment rubber seal between body and engine paneling for correct seating. If required, unbolt transmission support from body once more, correct seal position and refit transmission support.

6. Fit shift rod coupling to inner shift rod. M_A = 18 Nm (13 ftlb.), apply Loctite 270 to lock.

7. Fill in transmission oil (refer to Vol. I, page 03-28).

39 09 19 Removing and installing differential

Tools

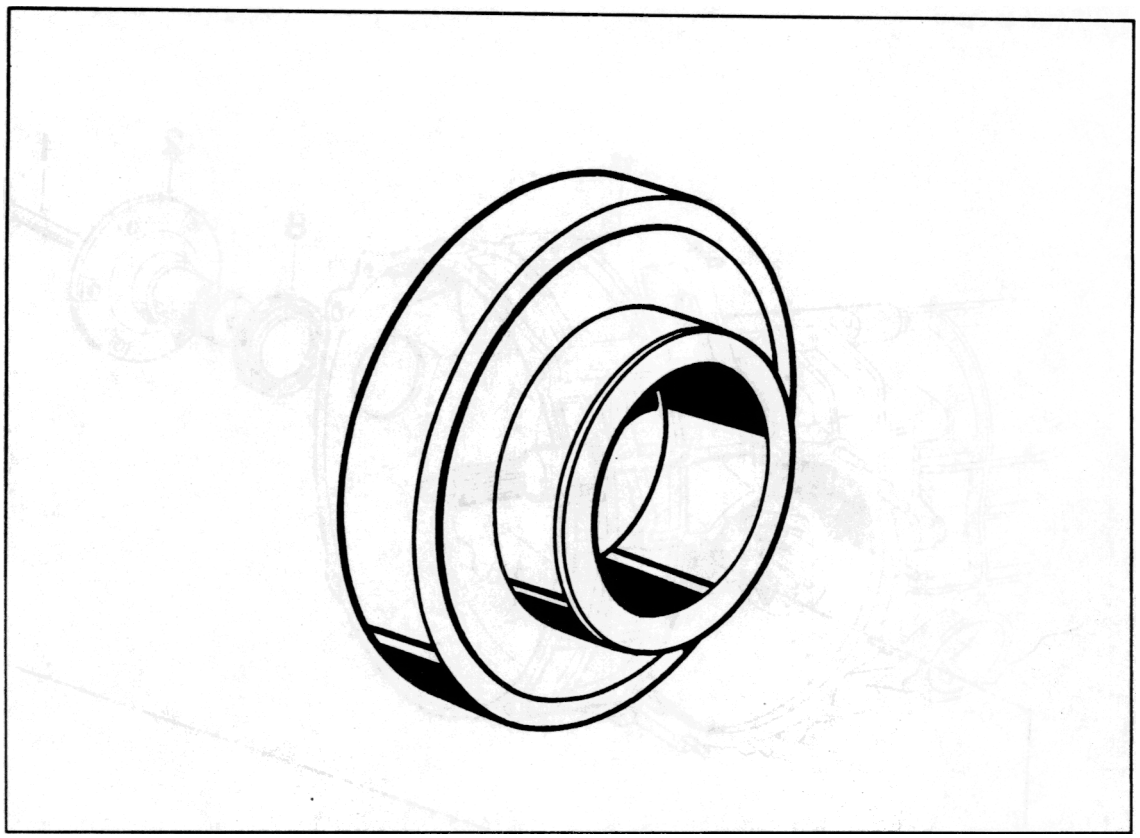

No.	Designation	Special tool	Order number	Explanation
	Thrust piece	9252	000.721.925.20	

39 09 19 Removing and installing differential

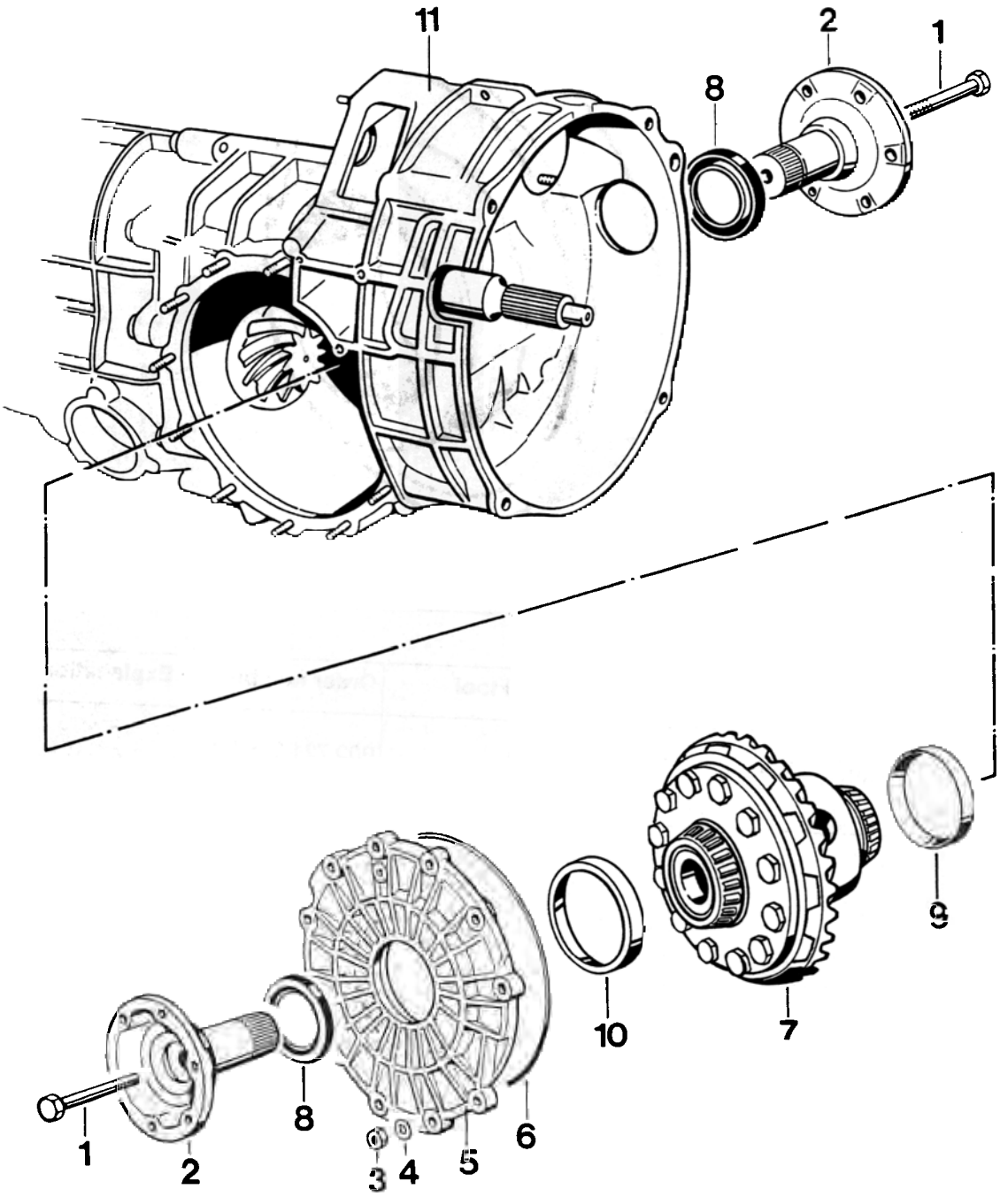

No.	Designation	Qty.	Note: Removal	Installation
1	Hexagon head bolt	2		Tighten to 44 Nm (32 ftlb.)
2	Joint flange*	2		
3	Hexagon head nut	11		Tighten to 23 Nm (17 ftlb.)
4	Washer	11		
5	Cover	1		
6	O-ring	1		Replace, oil lightly, do not twist
7	Differential or limited-slip differential	1		Readjust if required
8	Seal	2		Pack space between dust and sealing lips with grease (e.g. Liqui ämoly Pu 53). Use thrust piece 9252 to press in until it is seated against the stop
9	Bearing outer race	1	Pull out with suitable internal puller (e.g. Kukko 21 - 8)	Press in with suitable thrust piece
10	Bearing outer race	1	Pull out with suitable internal puller (e.g. Kukko 21 - 9)	Press in with suitable thrust piece
11	Transmission housing	1		

* The halfshaft flange and seal ring can also be removed and installed with the transmission installed.

39 09 37 Dismantling and assembling differential

Tools

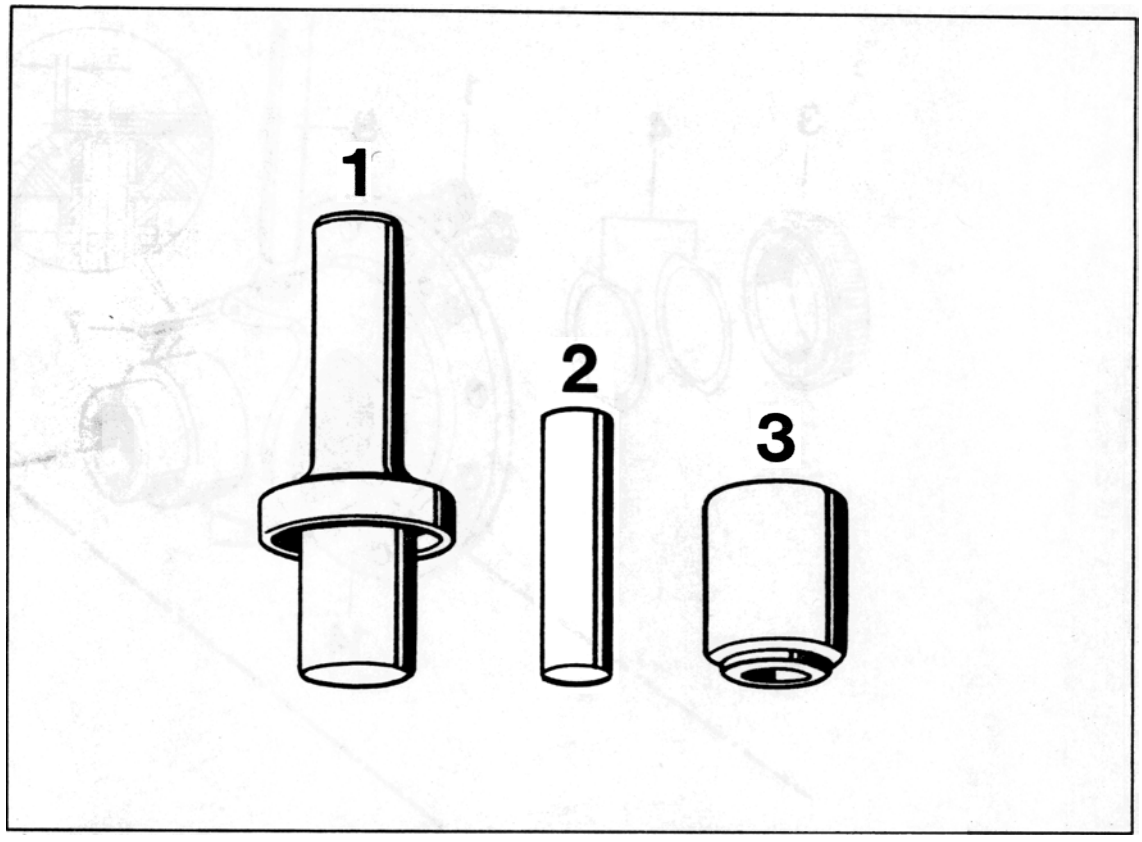

No.	Designation	Special tool	Order number	Explanation
1	Thrust piece	P 264 b	000.721.264.20	
2	Centering mandrel	9289	000.721.928.90	
3	Thrust piece	P 263	000.721.263.00	

39 09 37 Dismantling and assembling differential

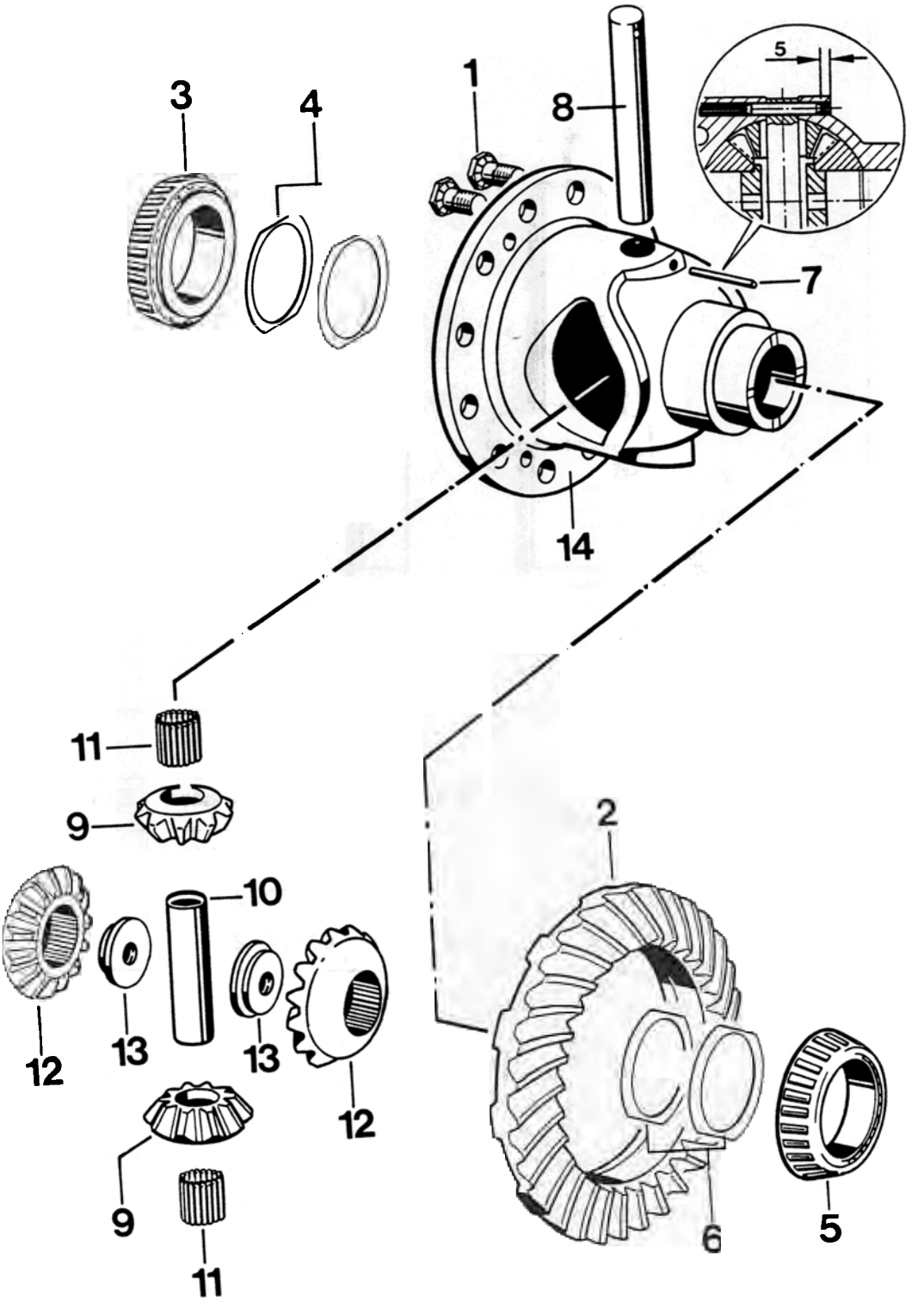

No.	Designation	Qty.	Note: Removal	Installation
1	Hexagon head bolt (with ribbed seating surface)	12		Must always be replaced. Threads must be dry and free from grease. Tighten to 200 Nm (148 ftlb.).
2	Ring gear	1		Threaded holes for ring gear bolts must be dry and free from grease. Observe matching number. Readjust if required.
3	Tapered roller bearing inner race	1	Pull off with suitable puller and P 263	Press on with P 264 b
4	Adjusting shim	X	Mark for reinstallation	Redetermine thickness if required
5	Tapered roller bearing inner race	1	Pull off with suitable puller and P 263	Press on with P 264 b
6	Adjusting shim	X	Mark for reinstallation	Redetermine thickness if required
7	Spiral pin	1		Press into correct position
8	Pin	1		
9	Bevel pinion	2		Always replace as a set (with shaft bevel gears)
10	Spacer sleeve	1		
11	Needle roller sleeve (31 individual needle rollers each)	2	Take care not lose any needle rollers	Apply stiff grease to install
12	Shaft bevel gear	2		Always replace as a set (with bevel pinion)
13	Threaded piece	2		
14	Housing	1		

Dismantling and assembly notes

Note

The small bevel pinions are supported in two needle roller sleeves consisting of 31 individual needle rollers each.

Dismantling

1. Press out pin with centering mandrel **9289**.

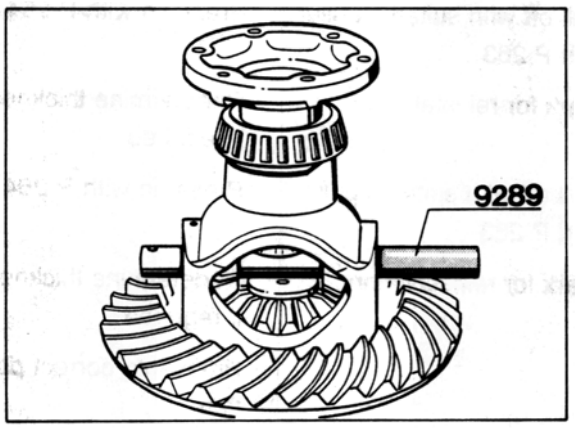

539-39

2. Using the centering mandrel, rotate bevel pinion relative to housing openings and lift out carefully, taking care not to lose any needle rollers.

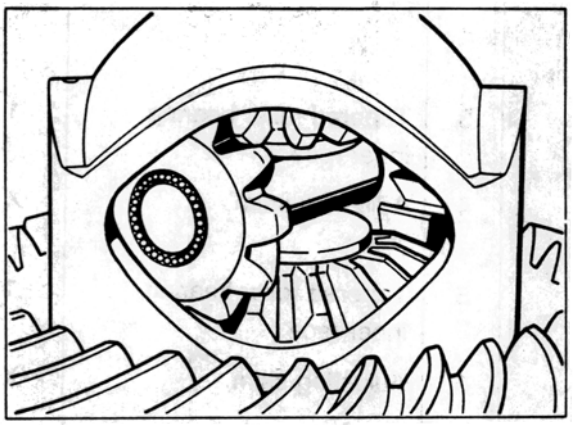

540-39

Assembly

1. Insert differential gears complete with pressed-in threaded washers across the large opening in the differential housing and locate with halfshaft flanges.

2. Preassemble one bevel pinion with 31 needle rollers, centering mandrel **9289** as well as the spacer sleeve and insert across opening in the housing.

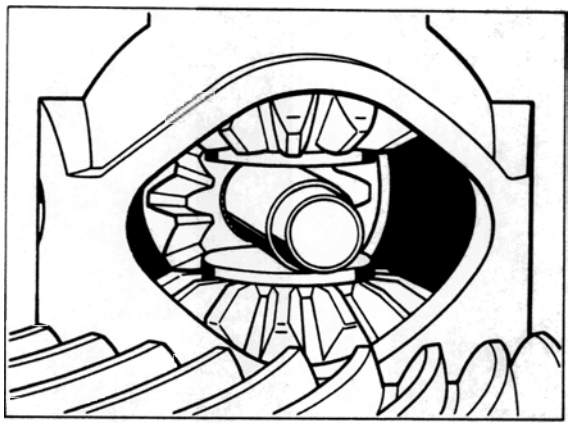

541-39

3. Complete second bevel pinion with 31 needle rollers and push carefully onto centering mandrel, taking care not to lose any needle rollers.

Note

To facilitate assembly, apply stiff grease to place needle rollers into position.

4. Rotate bevel pinion with centering mandrel until the bores in the housing line up with each other.

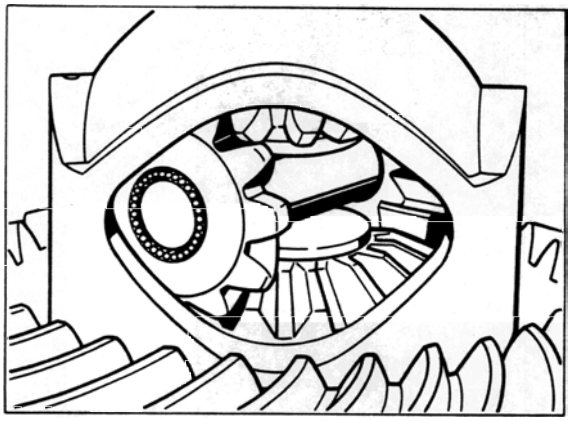

540-39

5. Press differential pin into correct position, take off centering mandrel and lock pin according to specifications.

39 08 15 Adjusting drive set

Tools

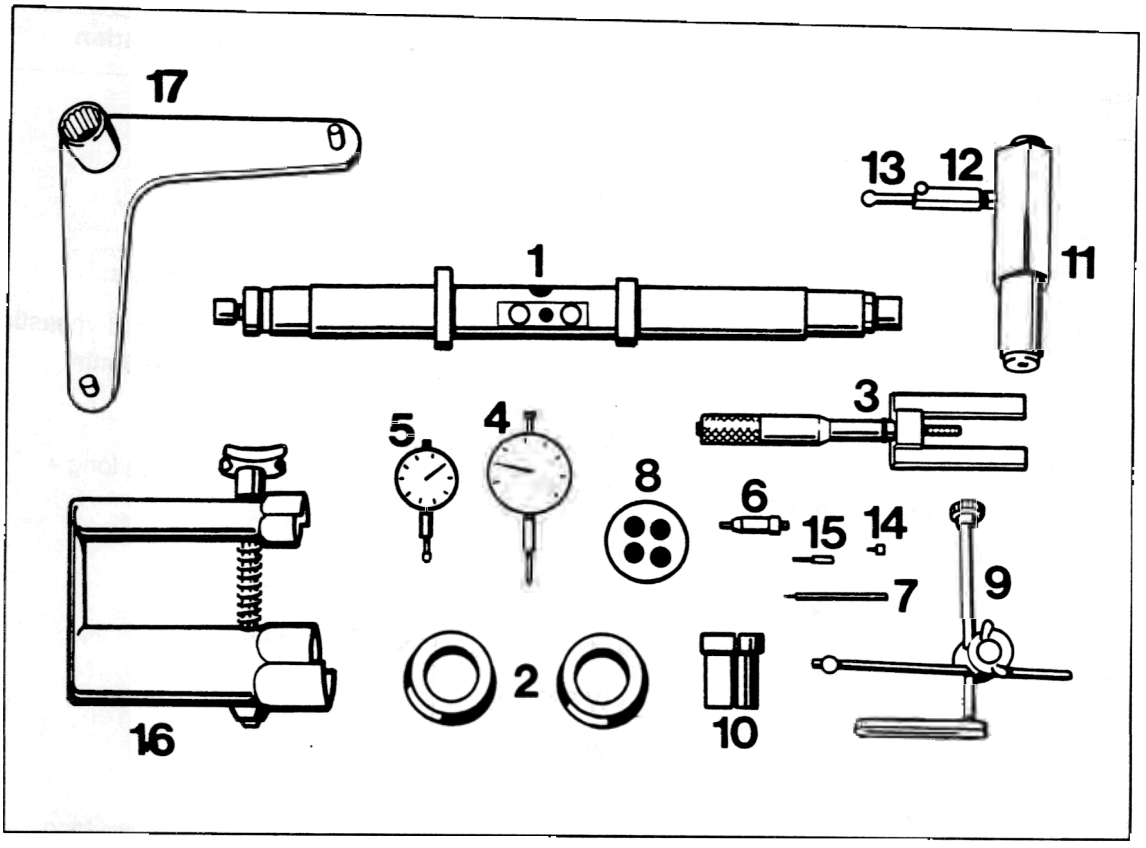

39 08 15 Adjusting drive set

Tools

No.	Designation	Special tool	Order number	Explanation
1	Measuring mandrel	VW 385/1		
2	Centering disks	9109	000.721.910.90	
3	Master gauge	VW 385/30		
4	Dial gauge	-		Standard
5	Dial gauge	-		Standard, measuring range 3 mm
6	Gauge plunger	VW 385/14		
7	Dial gauge extension	VW 385/56		30 mm long
8	Gauge block plate	9281	000.721.928.10	
9	Dial gauge bracket	VW 387		
10	Clamping sleeve	9145	000.721.914.50	
11	Adjusting device	VW 521/4		
12	Measuring lever	VW 388		
13	Gauge plunger	VW 388		
14	Dial gauge extension	VW 382/10		6.0 mm long
15	Dial gauge extension	VW 385/15		9.3 mm long
16	Clamping device	9562	000.721.956.20	
17	Holder	9253	000.721.925.30	

Practical procedure when readjusting the drive set

If it is necessary to adjust drive pinion and ring gear, follow the below sequence to ensure an efficient working procedure:

1. Determine the total thickness of shims "Stot" (S_1 plus S_2) for the specified preload on the tapered roller bearings/differential.

2. Determine the thickness of shim "S_3".

3. Split the total shim thickness "Stot" into S_1 and S_2 so that the specified circumferential backlash is present between ring gear and drive pinion.

The aim of this adjustment is to restore the smoothest running position which has been achieved on test equipment in the production line.

To achieve correct results, greatest possible cleanliness for all assembly work and measuring procedures is essential.

When assembling the final drive assembly, it is only necessary to readjust drive pinion and ring gear or drive set if components have been replaced which have a direct influence on the adjustment. Refer to the following table to avoid unnecessary adjustment procedures.

Adjust: / Replaced component	Ring gear (S_1 + S_2)	Drive pinion (S_3)
Transmission case	x	x
Lateral transmission cover	x	
Large cylindrical roller bearing and four-point bearing for drive pinion	x	x
Drive set	x	x
Differential housing	x	
Tapered roller bearing for differential	x	

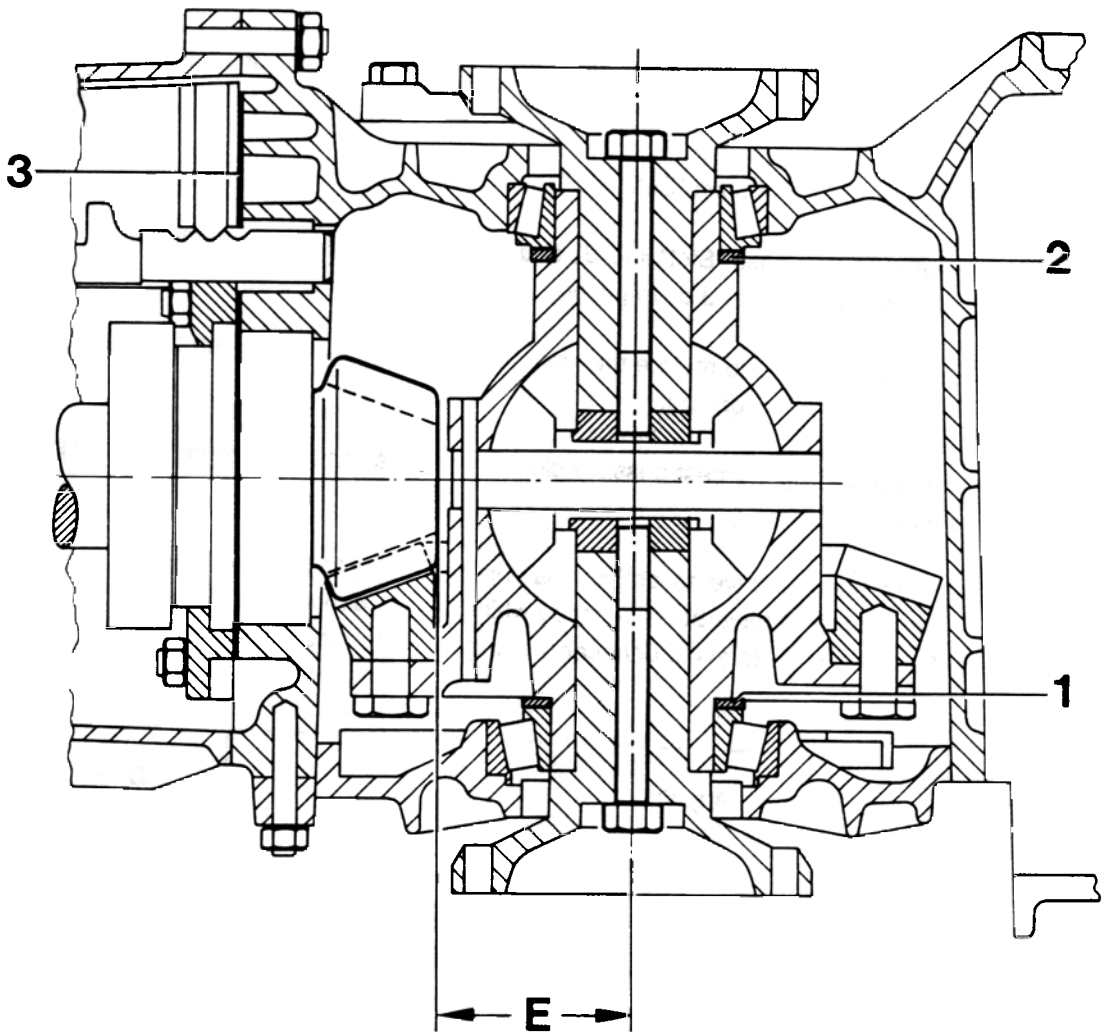

1 – Shim S_1
2 – Shim S_2
3 – Adjusting shim S_3
E – Setting value

Correct results may only be achieved if assembly work and measuring procedures are carried out carefully and with maximum cleanliness.

Adjusting drive set

General

The setting of drive pinion and ring gear is a determining factor for the service life and smooth running of the rear-axle drive. Drive pinions and ring gears that have been checked for good tooth contact pattern and low noise in both directions of rotation on special test equipment are therefore matched during prodution. The position at which smoothest running can be achieved is determined by shifting the drive pinion axially, and embossed on the ring gear as setting value "E".

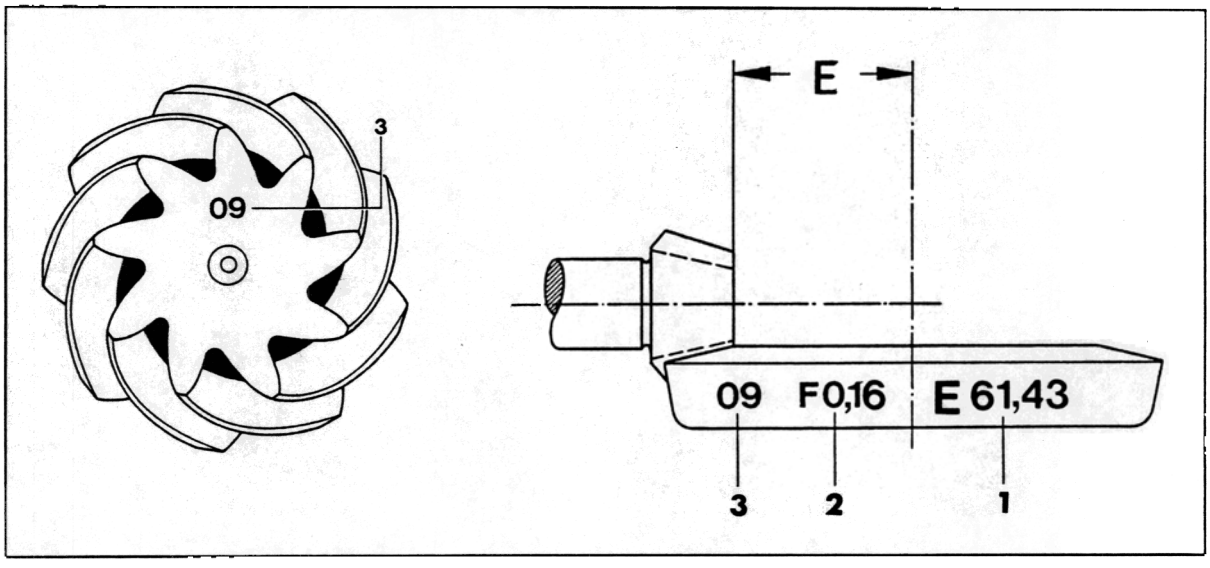

1 = setting "E" (e.g. 61.43 mm)
2 = circumferential backlash "F"
(e.g. 0.16 mm)
3 = matching number

39 08 15 Adjusting drive pinion

Note

The setting value "E" is indicated on the ring gear.

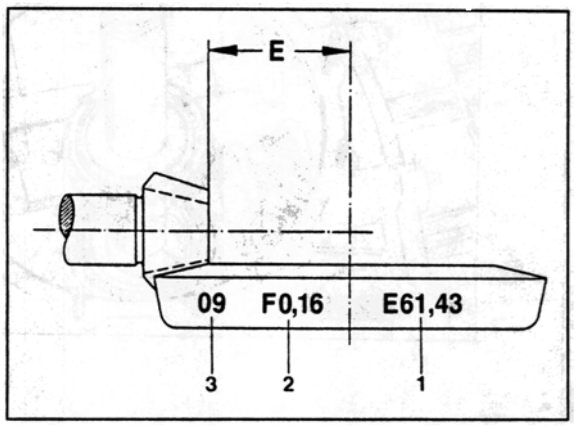

217-39

1 = Setting value "E"

1. Install complete gear set without "S_3" shims and tighten all tensioning plate hexagon-head nuts to **23 Nm** (17 ftlb.).

2. Fit gear housing and locate with three nuts.

3. Install and engage sixth gear.

4. Block input shaft with Special Tool **9253** and tighten drive pinion collar nut to **300 Nm** (221 ftlb.).

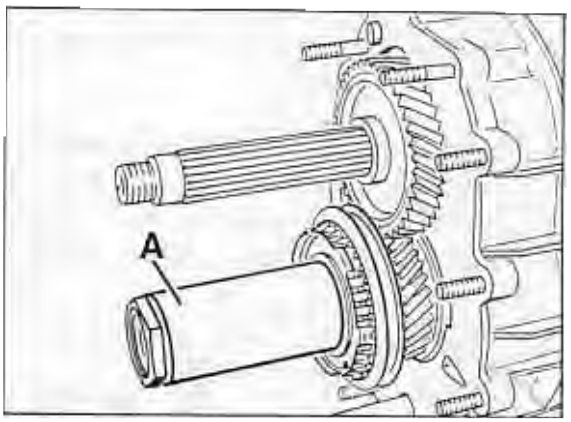

2018-39

A = Suitable pipe section

5. Set adjusting ring of measuring mandrel **VW 385/1** to dimension "a".

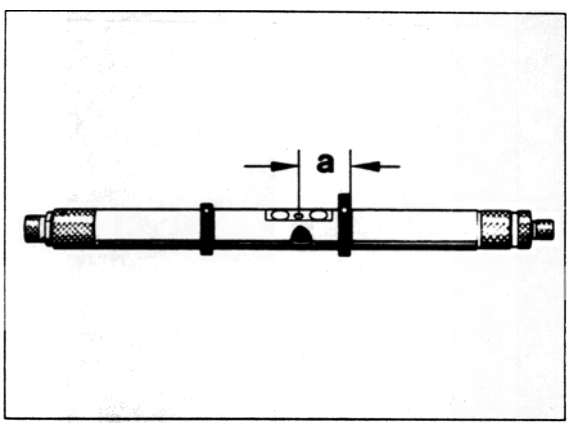

223-39

a = approx. 65 mm

Printed in Germany - 20, 1997

6. Assemble measuring mandrel with centering disks **9109**, tapered roller bearing, plunger **VW 385 /14** and dial gauge extension **VW 385/15**.

7. Set measuring mandrel with master gauge **385/30** to the setting value (61.43 mm in the example). Set dial gauge (3 mm measuring range) to zero with 1 mm preload.

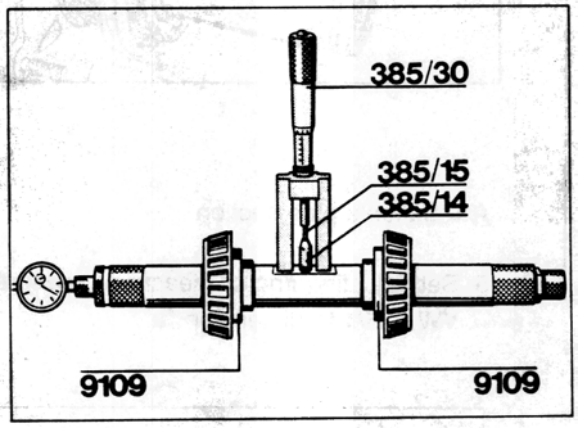

543-39

8. Put gauge block plate **9281** on drive pinion head and insert measuring mandrel into transmission case. Dial gauge extension is located in the area of the gauge block plate.

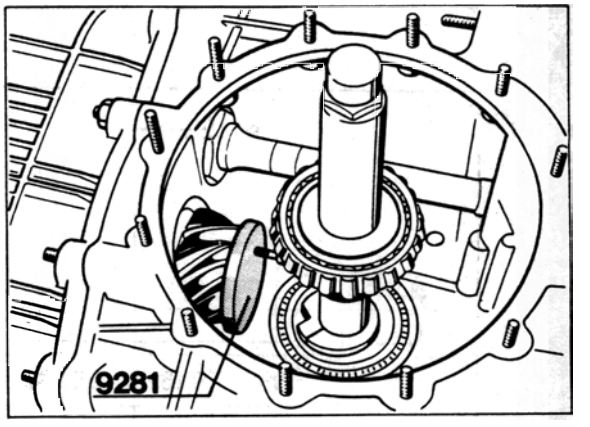

544-39

9. Fit lateral transmission cover without O-ring and tighten crosswise with 4 nuts.

Note

Do not use a hammer when fitting the lateral transmission cover (the gauge block plate held by magnets might fall off). Fit cover in installation position only by tightening the nuts uniformly.

10. Pull second centering disk with spindle towards the outside until the measuring mandrel can just be turned by hand.

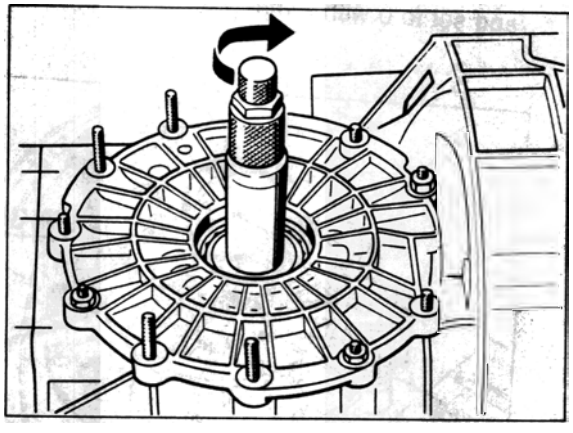

545-39

11. Turn measuring mandrel carefully until the dial gauge extension is vertical to the face of the drive pinion head. At this point, the pointer of the dial gauge reaches maximum deflection (reverse point) and the dial gauge must be read.

Note

The measured value always deviates from the set dimension clockwise (the smaller pointer on the dial gauge is between 1 and 2), i.e. if the dial gauge is set with a preload of 1 mm, the value deviating from 1 is taken as shim thickness "S_3".

Example:

If the small pointer on the dial gauge is between 1 and 2 and the large pointer indicates 0.37 mm, then 0.37 mm is the shim thickness (with 1mm gauge preload) to be inserted. Always round up or down to the nearest 0.05 mm (e.g. 0.37 mm to 0.35 mm).

12. After inserting the necessary shims, check the setting value "E" again. A deviation of ± 0.03 mm is permissible.

Adjusting ring gear

Determine total shim thickness "S tot." ($S_1 + S_2$).

The ring gear must be adjusted, if the:

transmission case,
lateral transmission cover,
tapered roller bearing for differential,
differential housing or drive set
have been replaced.

Note

The drive pinion must be removed to determine the preload of the differential tapered roller bearings.

1. Make sure that the bearing outer races of the tapered roller bearings are well seated in the transmission case or lateral transmission cover, respectively.

2. Fit one spacer ring (2.5 mm thick) on the ring gear side and on the opposite side of the differential to be used.

3. Insert differential into transmission case and rotate several times.

4. Fit lateral transmission cover without seal and tighten all hexagon-head nuts to **23 Nm** (17 ftlb.).

5. Put gauge block plate **VW 385/17** on the collar of the differential.

6. Fasten universal dial gauge holder **VW 387** with dial gauge and extension to the case and set to 0 with 2 mm preload.

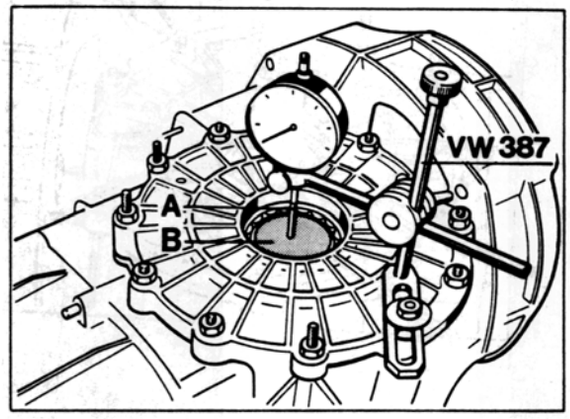

546-39

A = Dial gauge extension (approx. 30 to 40 mm long)
B = Gauge block plate VW 385/17

7. Move differential up and down. Read off backlash on the dial gaug and note.

Note

Do not turn differential while measuring backlash as this will give an incorrect reading.

8. Calculate "S tot.".
   "S tot." = Fitted shim thickness
   + Measured value
   + Pressure fit of tapered roller bearing

Example

Thickness of shims inserted	5.00 mm
Measured value	0.75 mm
Pressing (constant value)	0.40 mm
"S tot."	6.15 mm

9. Remove differential, pull off both tapered roller bearings and split calculated shim thickness "S tot." as follows.
   Selcect spacer S_1 0.70 mm thinner and S_2 0.70 mm thicker as a starting point for subsequent adjustment of the backlash.

Example

Total shim thickness of spacers
$S_1 + S_2 = 6.15$ mm

Thickness of spacer S_1

6.15 mm / 2	= 3.075 mm
	− 0.700 mm
	2.375 mm

Thickness of spacer S_2

6.15 mm / 2	= 3.075 mm
	+ 0.700 mm
	3.775 mm

Note

Spacers are available in thicknesses of 1.6 to 3.1 mm in increments of 0.10 mm.

By using a 0.25 mm shim, the shim thicknesses may be graduated in increments of 0.05 mm.

The calculated shim thicknesses must be rounded up or down for plausible dimensions that will not alter the total thickness S1 and S2.

Example:

Calculated thicknesses

$S_1 + S_2 = 2.375 + 3.775 = 6.15$ mm

Rounded thicknesses

$S_1 + S_2 = 2.35 + 3.80 = 6.15$ mm

Measure shims with a micrometer in several places. Permissible deviation 0.02 mm. Also check shims for burrs and damage.

Adjusting circumferential backlash

Note

The backlash to be set is embossed on the ring gear.

1. Mount gear set using shims "S_3" determined while adjusting the drive pinion.

Note

Make sure that the collar nut of the drive pinion is tightened to **300 Nm** (221 ftlb.) before measuring backlash.

2. Insert differential with tapered roller bearing and shims (S_1 + S_2) into the housing.

3. Fit lateral transmission cover and tighten all hexagon-head nuts to **23 Nm** (17 ftlb.).

Note

Always make sure that there is a certain amount of backlash when tightening the nuts. Never allow the drive pinion to seize.

4. Assemble measuring lever **VW 388** and adjusting device VW 521/4 and adjust lever length to 80 mm with the plunger. Refer to dimension "a" in the picture.

5. Insert adjusting device with clamping sleeve (Special Tool 9145) into the differential and clamp firmly.

6. Rotate differential in both directions several times to settle the tapered roller bearings.

7. Fit universal dial gauge holder with flat extension in such a way as to produce a right angle between dial gauge axis and lever.

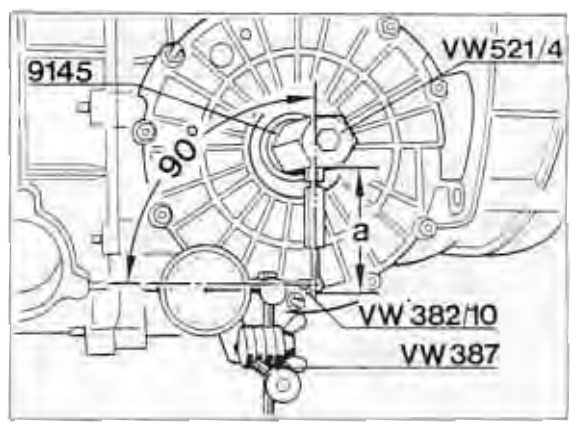

548-39

Dimension "a" = approx. 80 mm

8. Turn ring gear carefully at the clamping screw of the adjusting device as far as the stop and set the dial gauge to zero. Turn back ring gear and read off circumferential backlash. Note down the reading.

Note

When carrying out measurements, the drive pinion must be blocked with Special Tool 9562.

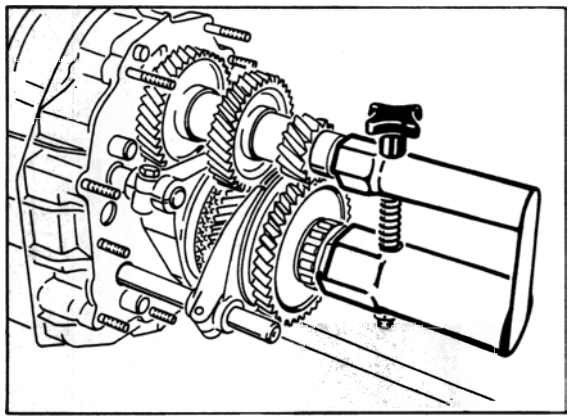

1710-39

9. After turning the ring gear a further 90°, repeat measuring procedures three times. The measured values must not deviate from one another by more than 0.03 mm.

Note

The backlash to be adjusted is embossed on the ring gear. A deviation of
± 0.03 mm is permissible

10. If the required backlash cannot be obtained, replace spacers (S_1 + S_2) again. The total shim thickness ("S tot.") must not be altered, however.

Repair Manual

911 Carrera 4
(993)

Volume II:
Transmission
Manual

Dr. Ing. h.c. F. Porsche Aktiengesellschaft

II Manual Transmission (911 Carrera 4)

3 Transmission

3 Technical Data . . . . . 3 - 201

34 Manual Transmission, Controls, Case

34 35 37 Dismantling and assembling transmission . . . . . 34 - 201
34 50 37 Dismantling and assembling intermediate casing . . . . . 34 - 215
34 52 37 Dismantling and assembling gear housing . . . . . 34 - 219
34 37 37 Dismantling and assembling transmission housing . . . . . 34 - 223

35 Manual Transmission - Gears, Shafts, Internal Controls

35 50 19 Removing and installing input shaft oil seal . . . . . 35 - 201
35 19 37 Dismantling and assembling tensioning plate . . . . . 35 - 203
35 40 19 Removing and installing input shaft . . . . . 35 - 207
35 40 37 Dismantling and assembling input shaft . . . . . 35 - 215
35 59 37 Dismantling and assembling output shaft . . . . . 35 - 221

39 Final Drive, Differential, Differential Lock

39 66 37 Dismantling and assembling transfer casing . . . . . 39 - 201
39 60 01 Checking operation of installed viscous clutch . . . . . 39 - 205
39 40 19 Removing and installing differential lock . . . . . 39 - 207
39 08 15 Adjusting drive set . . . . . 39 - 211
39 09 19 Removing and installing front-axle final drive . . . . . 39 - 225
39 59 19 Removing and installing oil seal of halfshaft flange (front axle final drive) . . 39 - 227
39 55 19 Removing and installing output shaft oil seal (Front axle final drive) . . . . 39 - 229
39 03 19 Removing and installing central tube . . . . . 39 - 231

3 Technical data

6 speed manual transmission G 64

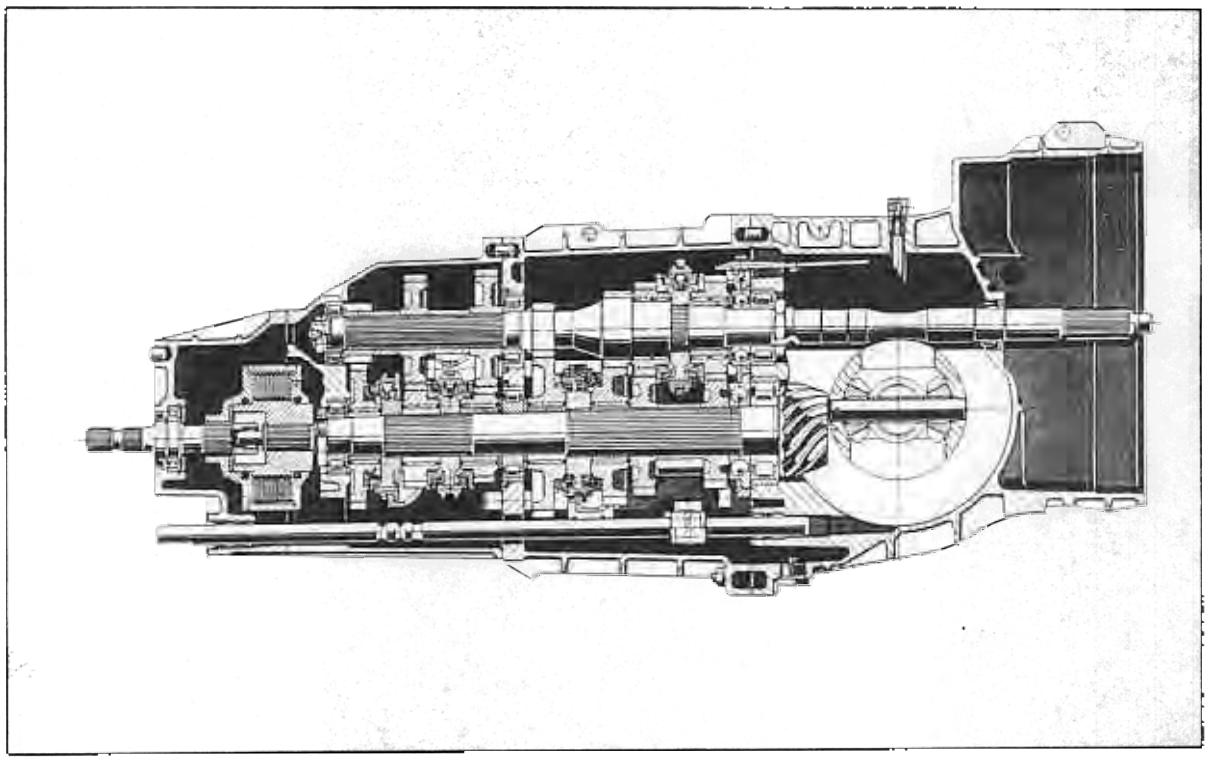

1426-3

Type	Equipment	installed in:	Model year
G 64/21	6 speed	911 Carrera 4 worldwide except USA, CH, A	'95 / '96
G 64/20	6 speed	911 Carrera 4 USA, CH, A	'95 / '96
		911 Carrera 4 worldwide	'97

3 Technical Data

Structure of transmission numbers

G64/21	1	05641
Transmission type	**Index for variances within the engine no.** 1 = standard differential 2 = lock differential	**Number** e.g. 05641

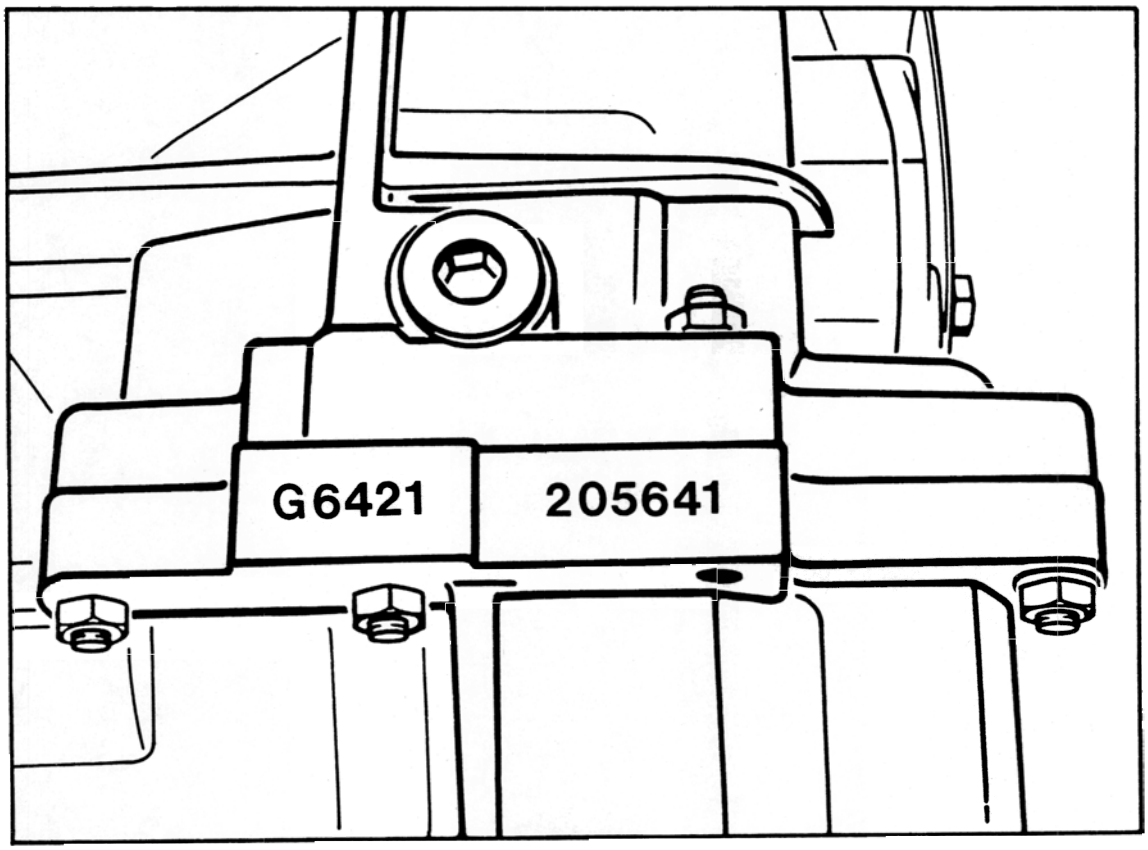

3 Technical Data (Manual transmission)

General Data	Manual transmission G 64 / 21 / 20	
Transmission ratios	G64/21 Z_1 Z_2 = Z_2 : Z_1	G64/20 Z_1 Z_2 = Z_2 : Z_1
1st gear	11 : 42 = 3.818	11 : 42 = 3.818
2nd gear	20 : 43 = 2.150	21 : 43 = 2.048
3rd gear	25 : 39 = 1.560	27 : 38 = 1.407
4th gear	33 : 41 = 1.242	34 : 38 = 1.118
5th gear	41 : 42 = 1.024	42 : 39 = 0.928
6th gear	39 : 32 = 0.820	40 : 31 = 0.775
Reverse	14 : 40 = 2.857	14 : 40 = 2.857
Final drive	Hypoid bevel-gear drive with 16 mm offset	
Final drive ratio	9 : 31 = 3.444	9 : 31 = 3.444
Capacity	3.8 liters multigrade transmission oil SAE 75 W 90 of API classification GL 5 (or MIL-L 2105 B)	

3 Technical Data

Torque specifications for manual transmission, front axle final drive, transmission suspension and central tube

Location	Thread	Tightening torque Nm (ftlb)
Oil drain and oil filler plugs	M 22 x 1,5	30
Hexagon head nuts at: Front and side transmission cover, gear and transmission housings. Tensioning plate	M 8	23
Clamping plate to intermediate case	M 6	10
Hexagon head nut / input shaft	M 22 x 1,5	200
Hexagon head nut / input shaft	M 30 x 1,5	250
Hexagon head nut / output shaft	M 30 x 1,25	300
Hexagon head nut / shift fork	M 8	23
Reverse light switch to gear housing	M 18 x 1,5	35
Guide tube to transmission housing	M 6	10
Selector gate to tensioning plate	M 6	10
Collar nut / return gear II	M 8	23
Vent to transmission housing	M 14 x 1,5	35

Location	Thread	Tightening torque Nm (ftlb)
Hexagon head bolt / joint flange	M 10	44 (32)
Oil pan to tension plate	M 5 (microencapsulated)	6 (4)
Ring gear to differential housing (hexagon head bolt with ribbed seating surface)	M 12 x 1,25	200 (147)
Front axle final drive		
Oil filler plug	M 22	22 (16)
Oil drain plug	M 22	30 (22)
Final drive mount at rear axle		
Crossmember to body	M 10 x 70	46 (34)
Mount to crossmember (lock nut)	M 10	46 (34)
Mount to transmission (lock nut)	M 10	46 (34)
Final drive mount at front axle		
Front axle final drive mount to front axle crossmember	M 8	23 (17)
Front axle final drive mount to central tube	M 12	85 (63)
Central tube		
Double clamp to central shaft	M 8	35...40 (26...29)
Manual transmission to central tube	M 12	85 (63)
Front axle final drive to central tube	M 10	46 (34)

3 Technical Data

Front axle final drive

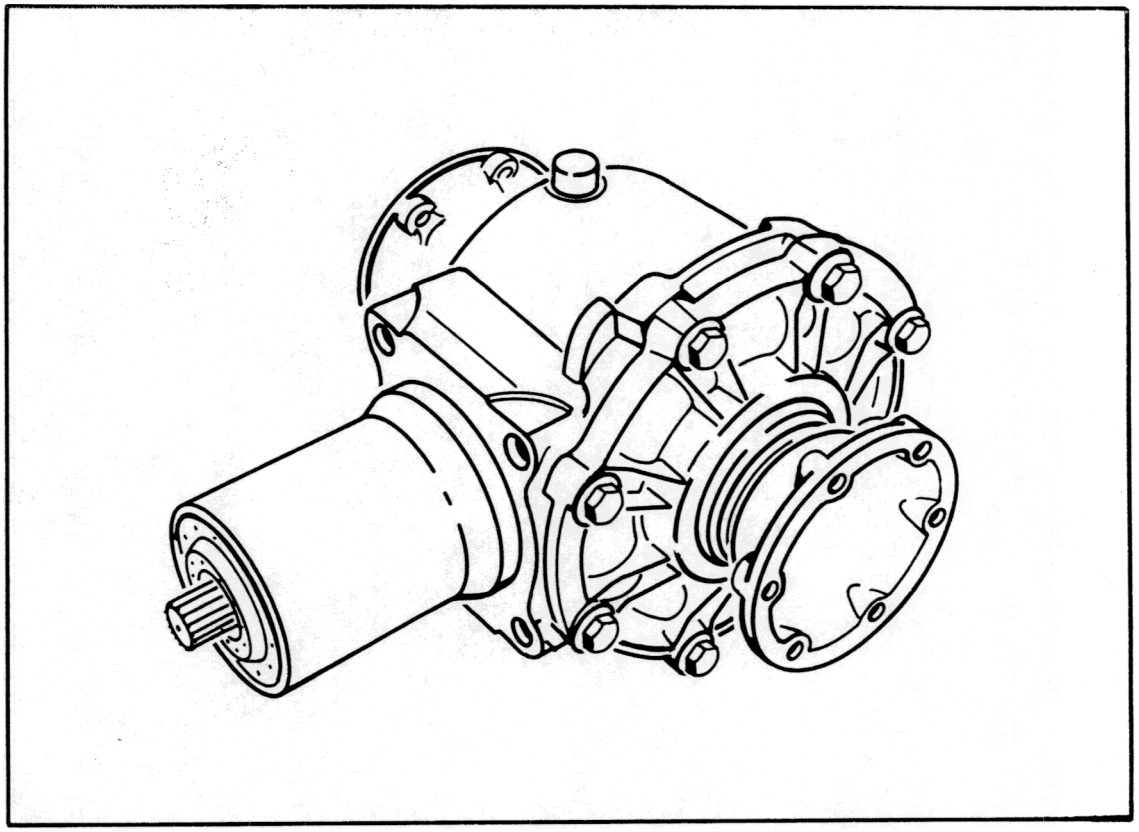

Type	Code letter	Equipment	Installed in:	Model Year
Z64/20			911 Carrera 4 worldwide	'95

General data	Front axle final drive Z64/20
Final drive ratio ($Z_2 : Z_1 = i$)	31 : 9 = 3.444
Final drive	Bevel drive without hypoid offset
Capacity	Approx. 0.6 liters hypoid oil 75 W 90 of API classification GL 5 (or MIL-L 2105 B)

Printed in Germany – !

34 35 37 Dismantling and assembling transmission

Tools

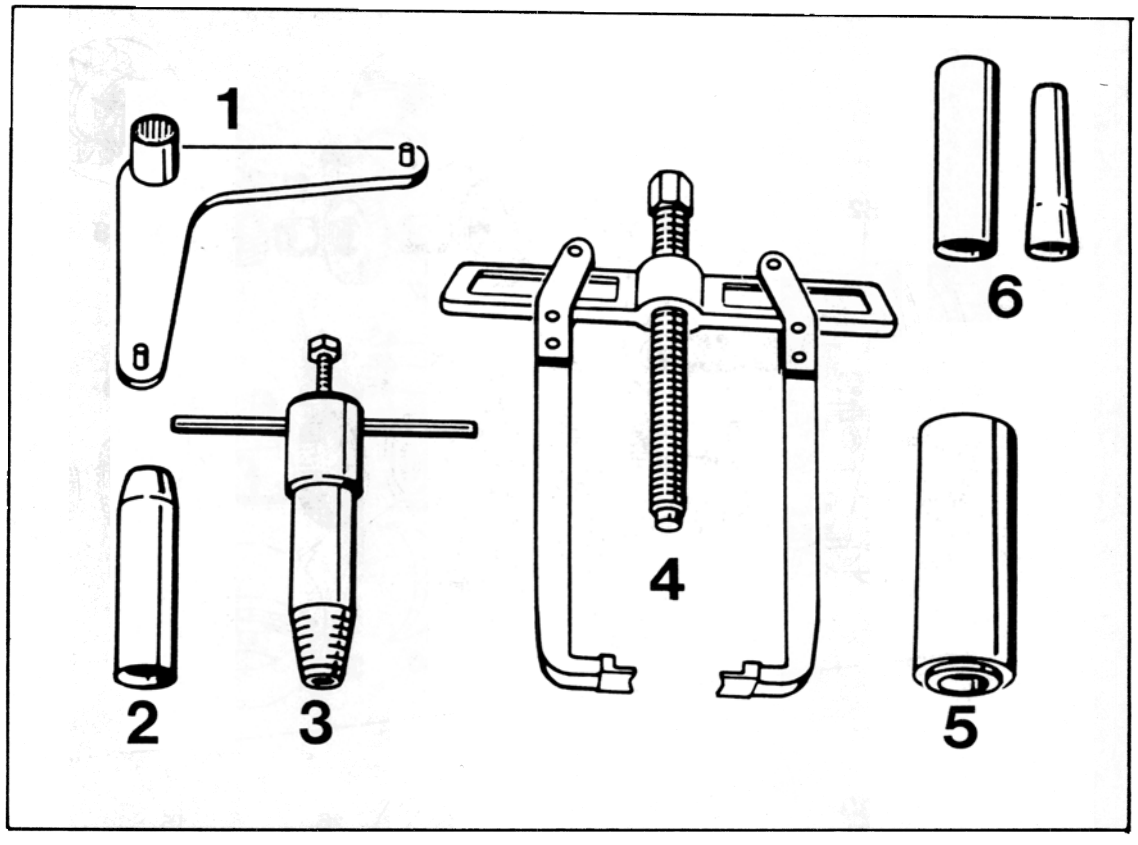

2009-34

No.	Designation	Special tool	Order number	Explanation
1	Bracket	9253	000.721.925.30	
2	Sleeve	9255	000.721.925.50	
3	Pulling tool	9251	000.721.925.10	
4	Puller	-	-	with arms of puller 9284
5	Thrust piece	9256	000.721.925.60	
6	Assembly tool	9547	000.721.954.70	

Printed in Germany – 9. 1994

34 35 37 Dismantling and assembling transmission

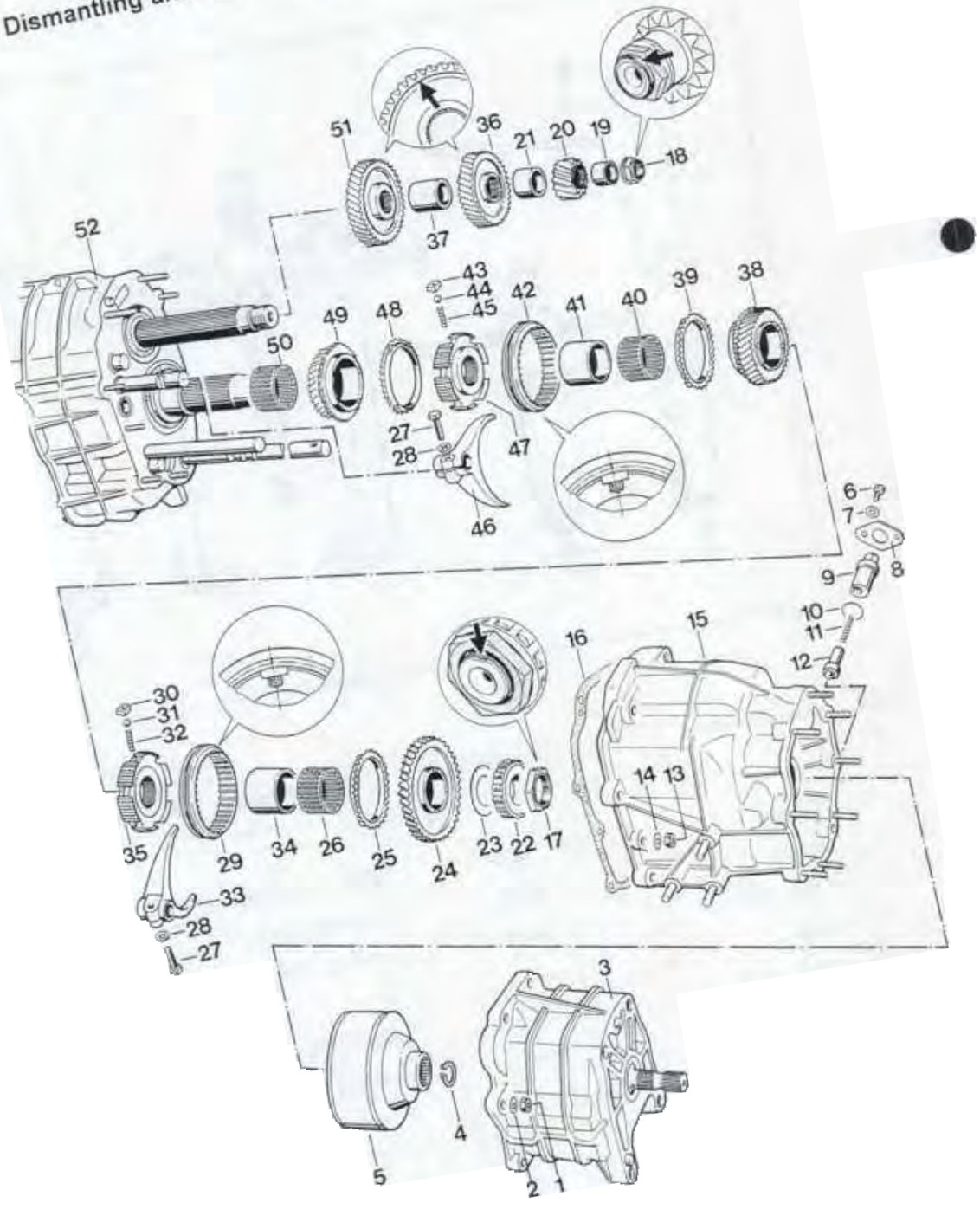

No.	Designation	Qty.	Note: Removal	Installation
1	Hexagon head nut	8		M_A = 23 Nm (17 ftlb.)
2	Washer	8		
3	Transfer casing	1		Seal between transfer casing and intermediate casing is made with Loctite 573
4	Snap ring	1	Remove with suitable pointed pliers	Install with Special Tool 9547
5	Viscous clutch	1		
6	Hexagon head bolt	2		Tighten to 10 Nm (7 ftlb.)
7	Washer	2		
8	Tensioning plate	1		
9	Eccentric bushing	1		Adjust
10	Seal	1		Replace
11	Thrust spring	1		
12	Locking bushing	1		
13	Hexagon head nut	10		Tighten to 23 Nm (17 ftlb.)
14	Washer	10		
15	Intermediate casing	1		
16	Gasket	1		Replace
17	Hexagon nut*	1	Lock input shaft with Special Tool 9253 and engage 6th gear	Tighten to 300 Nm (221 ftlb.). Upset flange to lock
18	Hexagon nut*	1	Lock input shaft with Special Tool 9253 and engage 6th gear	Tighten to 200 Nm (147 ftlb.). Upset flange to lock
19	Bearing inner race	1	Pull off across fixed gear No. 20	Heat to approx. 120 °C
20	Fixed gear (Reverse)	1		
21	Spacer sleeve	1		
22	Cylindrical roller bearing	1	Pull off across loose gear No. 24	Heat to approx. 120 °C
23	Thrust washer	1		

Printed in Germany - 20, 1997

No.	Designation	Qty.	Note: Removal	Installation
24	Loose gear (Reverse)	1		
25	Synchronizer ring	1	Mark for reinstallation	Check for wear. Fit with the same gear-wheel (Cogs must face driver dogs)
26	Needle bearing cage	1	Mark for reinstallation	Fit with the same gear-wheel
27	Hexagon head bolt	2		Tighten to 23 Nm (17 ftlb.)
28	Washer	2		
29	Selector sleeve	1	Lift off along with shift fork No. 33. Take care not to lose synchromesh parts.	Center the centerpunch marks relative to the driver dogs. Offset side faces loose gear No. 24
30	Driver dog	3		Domed end faces selector sleeve
31	Ball	3		
32	Spring	3		
33	Shift fork (Reverse)	1		Adjust so that play is barely felt at the selector sleeve when reverse is engaged. When neutral is engaged, the synchronizing ring must be able to rotate freely
34	Inner race**	1	Mark for reinstallation. Pull off across guide sleeve No. 35	Heat to approx. 120 °C
35	Guide sleeve (with snap ring)	1		Open end of snap ring must not be located in the driver dog area. Install in correct position complete with selector sleeve and shift fork (Snap ring faces loose gearwheel No. 38)

No.	Designation	Qty.	Note: Removal	Installation
36	Fixed gear (5th gear)	1		Identification groove faces fixed gear No. 20. Do not confuse with fixed gear No. 51
37	Spacer sleeve	1		
38	Loose gear (5th gear)	1		Do not confuse with loose gear No. 49
39	Synchronizing ring	1	Mark for reinstallation	Check for wear. Fit with the same gearwheel. (Cogs face driver dogs)
40	Needle roller bearing cage	1	Mark for reinstallation	Fit with the same gearwheel
41	Inner race**	1	Mark for reinstallation. Pull off with arms of Special Tool 9284 across loose gear No. 49	Fit with the same gearwheel. Heat to approx. 120 °C
42	Selector sleeve	1		Center the centerpunch marks relative to the driver dogs
43	Driver dog	3		Domed side faces selector sleeve
44	Ball	3		
45	Spring	3		
46	Shift fork (5th and 6th gears)	1		Adjust. In neutral position, selector sleeve must be set exactly in the middle between the loose gearwheels
47	Guide sleeve	1		Install complete with selector sleeve and shift fork
48	Synchronizing ring	1	Mark for reinstallation	Check for wear. Fit with the same gear (Cogs face driver dogs)

Printed in Germany - 20, 1997

No.	Designation	Qty.	Note: Removal	Installation
49	Loose gear (6th gear)	1		Do not confuse with loose gear No. 38
50	Needle roller bearing cage	1	Mark for reinstallation	Fit with the same gearwheel
51	Fixed gear (6th gear)	1		Identification groove faces fixed gear No. 36. Do not confuse with fixed gear No. 36
52	Transmission	1		

* Transmission shafts without recesses for securing the hexagon nuts have been installed since September 1995.
Self-locking hexagon nuts are used on these shafts, and these nuts must **always** be replaced in every
transmission repair.

** A result of tolerances, the bearing inner rings (no. 34 and 41) may either from a force fit on the shaft or have a certain amount of play.

Printed in Germany - 20 1997

Dismantling and assembly notes

Note

If the shift rods are moved across the neutral or gear latching positions when the transmission is dismantled or assembled, the small intermediate locks may drop out inadvertently.

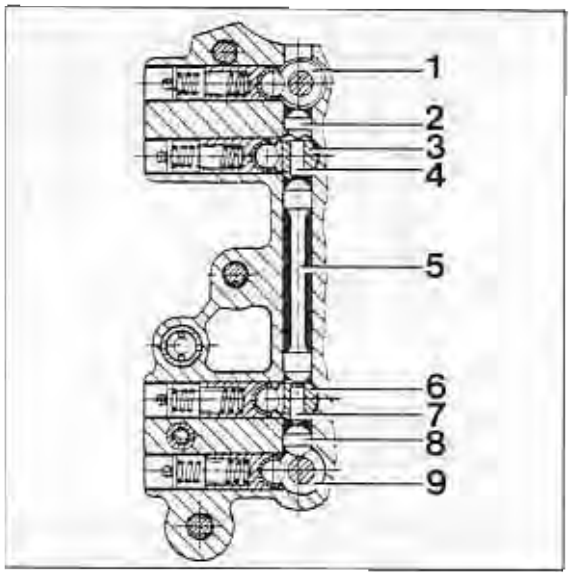

1709-35

4 and 7 = Intermediate locks

Dismantling

1. Engage 6th gear, lock drive shaft with Special Tool **9253** and unscrew hexagon head nuts for output and input shafts.

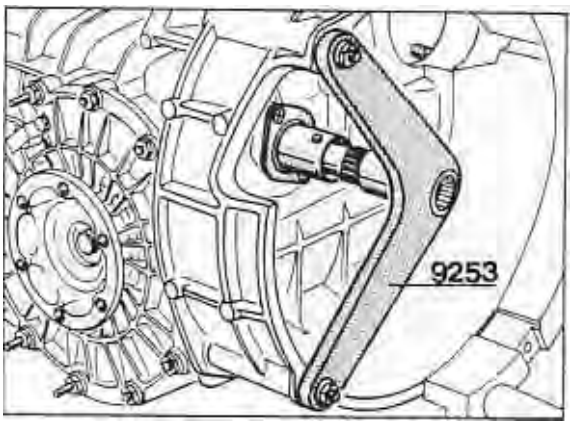

2. Engage 4th gear and pull off inner race of needle roller bearing (5th gear).

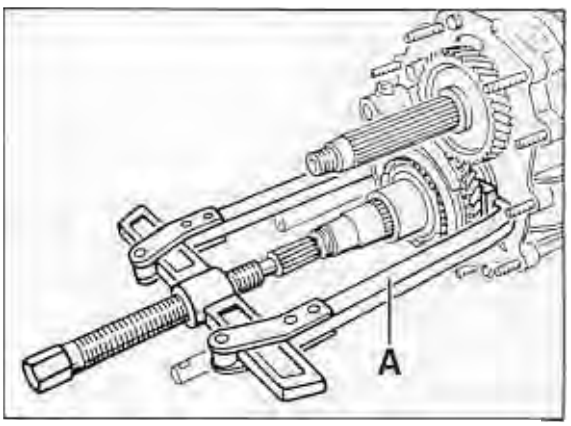

2011-34

A = Arms of puller No. 9284

Printed in Germany – 9. 1994

Assembly

1. Check synchronizing rings by pushing rings onto tapers of gearwheels and measuring gap „A" with a feeler gauge.

Installation dimension (new) = 0.9 mm min.
Wear limit = 0.6...0.7 mm

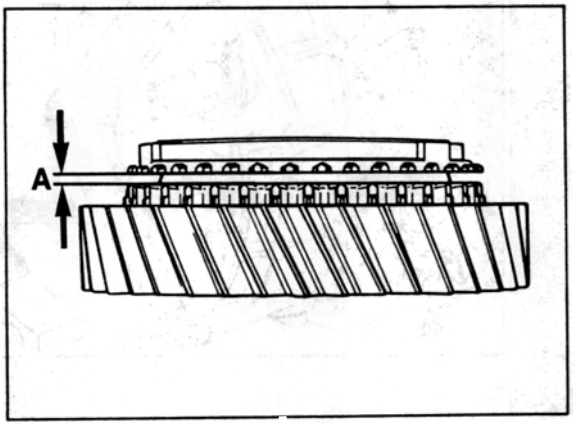

518-35

2. Engage 4th gear and fit all gearwheels.

3. Adjust inner shift rod until all gears may be preselected freely without notching. To adjust, undo hexagon head bolts of tensioning plate and rotate eccentric bushing.

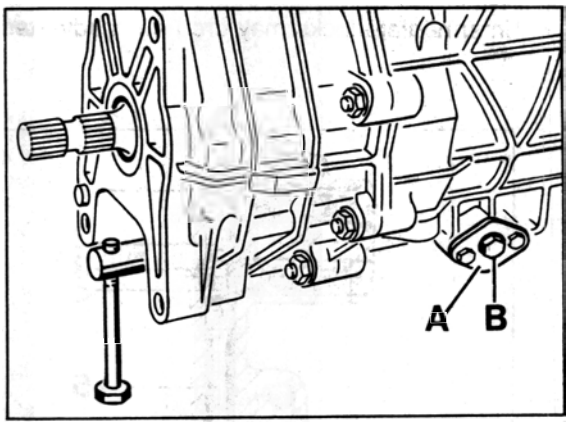

2014-34

A = Tensioning plate
B = Eccentric bushing

4. To check, shift through all gears, using a long M 8 bolt that is screwed into the inner shift rod.

34 35 37 Dismantling and assembling transmission

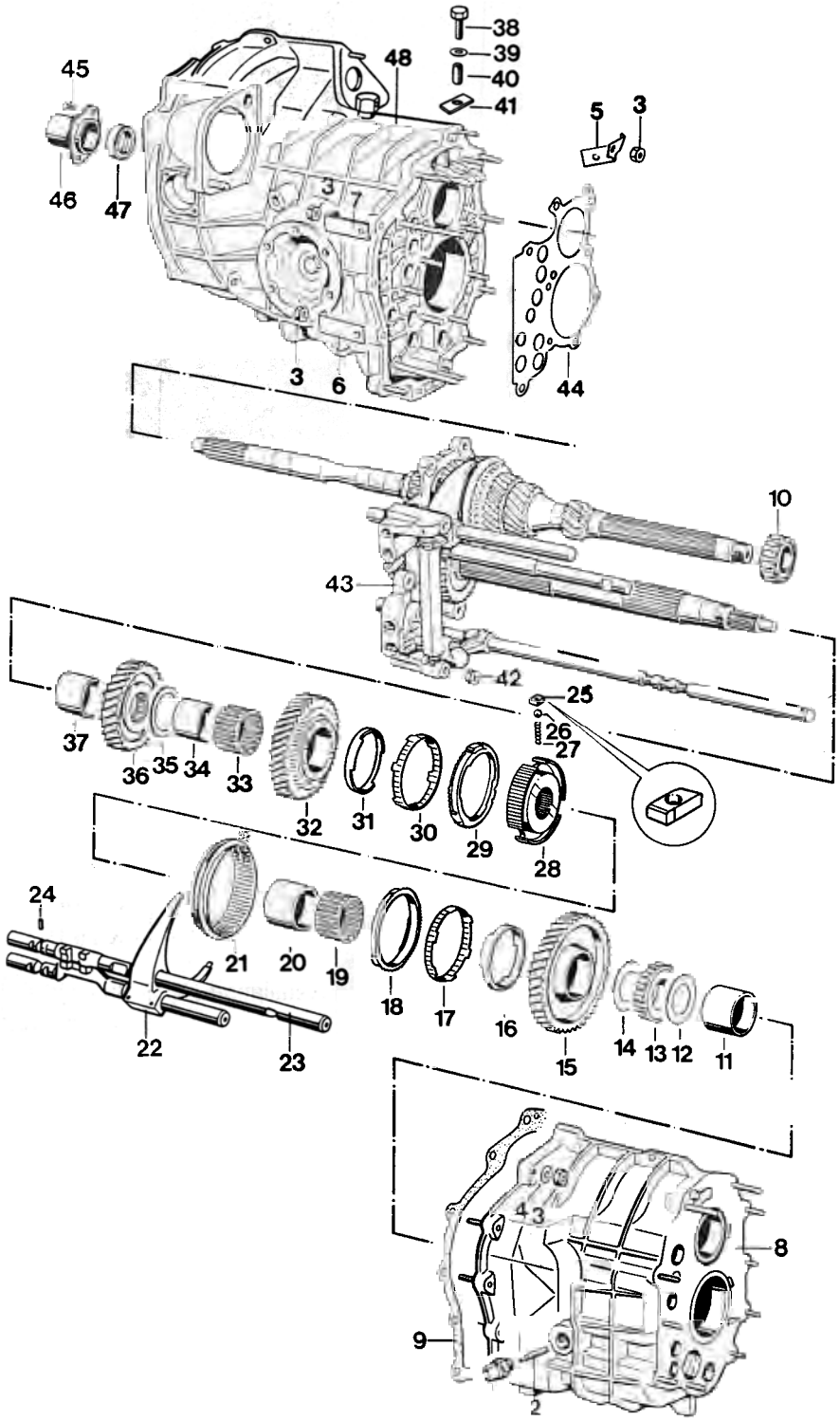

No.	Designation	Qty.	Note: Removal	Installation
1	Reverse light switch	1		Tighten to 35 Nm (26 ftlb.)
2	Plunger	1		Stepped end faces switch
3	Hexagon head nut	12		Tighten to 23 Nm (17 ftlb.)
4	Washer	10		
5	Retaining bracket	1	deleted	
6	Retaining bracket (straight)	1		
7	Retaining bracket (domed)	1		
8	Gear housing	1		
9	Gasket	1		Replace
10	Cylindrical roller bearing	1	Pull off	Heat to approx. 120° C
11	Inner race	1	Mark for reinstallation. Pull off across loose gearwheel No. 15. Observe clearance at reverse shift rod	Fit with the same gearwheel. Heat to approx. 120°C
12	Thrust washer	1		
13	Cylindrical roller bearing	1		Heat to approx. 120° C
14	Thrust washer	1		
15	Loose gearwheel (1st gear)	1		
16	Friction ring	1	Mark for reinstallation	Fit with the same gearwheel
17	Tapered ring	1	Mark for reinstallation	Fit with the same gearwheel. Tabs must engage in the cutouts in the loose gearwheel

No.	Designation	Qty.	Note: Removal	Installation
18	Synchronizing ring	1	Mark for reinstallation	Check for wear. Fit with the same gearwheel. Drivers must engage in the cutouts in the tapered ring. Three lugs face driver dogs
19	Needle roller bearing	1	Mark for reinstallation	Fit with the same gearwheel
20	Inner race	1	Shift rods in neutral position. Pull out shift rod for reverse gear. Pull off across loose gearwheel No. 32. Mark for reinstallation.	Fit with the same gearwheel. Heat to approx. 120 °C
21	Shift sleeve	1		Insert complete with guide sleeve and shift rods. The missing tooth of the internal teeth of the guide sleeve (No. 28) must be aligned exactly above the oil bore of the output shaft. For further notes, refer to page 35 - 213
22	Shift rod with pinned shift fork	1		
23	Shift rod (reverse)	1		
24	Spacer	1		Apply stiff grease to insert into shift rod
25	Driver dog	3		Place into correct position
26	Ball	3		
27	Spring	3		

No.	Designation	Qty.	Note: Removal	Installation
28	Guide sleeve	1		Missing tooth of internal teeth must be placed exactly above oil bore of output shaft
29	Synchronizing ring	1	Mark for reinstallation	Check for wear. Fit with the same gearwheel. Drivers must engage into the cutouts in the tapered ring. The lugs face the driver dogs.
30	Tapered ring	1	Mark for reinstallation	Fit with the same gearwheel. Tabs must engage into the cutouts in the loose gearwheel
31	Friction ring	1	Mark for reinstallation	Fit with the same gearwheel
32	Loose gearwheel (2nd gear)	1		
33	Needle roller bearing	1	Mark for reinstallation	Fit with the same gearwheel
34	Inner race	1	Mark for reinstallation. Pull off across fixed gearwheel No. 36	Fit with the same gearwheel. Heat to approx. 120 °C
35	Thrust washer	1		
36	Fixed gearwheel (3rd gear)	1		Large flange faces thrust washer No. 35
37	Spacer sleeve	1		
38	Hexagon head bolt (micro-sealed)	1		Must always be replaced. Tightening torque 6 Nm (4 ftlb.)
39	Washer	1		
40	Spacer sleeve	1		

No.	Designation	Qty.	Note: Removal	Installation
41	Retaining plate	1		
42	Hexagon head nut	10		Tighten to 23 Nm (17 ftlb.)
43	Tensioning plate with gear set	1		
44	Adjusting washer "S_3"	X	Note number and thickness for reinstallation	Redetermine thickness if required
45	Oval-head screw	2		Tighten to 10 Nm (7 ftlb.)
46	Guide tube	1		
47	Shaft seal	1	Refer to page 35 - 1	Do not fit until gear set has been fitted (refer to page 35 - 1)
48	Transmission housing	1		

Note

Due to the tolerances (transition fit), the inner bearing rings (nos. 11, 20 and 34) may have clearance or press-fit on the shaft.

Printed in Germany - 12. 1995

Dismantling and assembly notes

Dismantling

Note

To facilitate assembly, do not remove the complete gear set assembly but partially dismantle the installed drive pinion.

Assembly

1. The number of adjusting shims "S3" noted during dismantling or the number of adjusting shims noted when the drive pinion was adjusted should be placed onto the studs in the housing until the equivalent thickness is obtained.

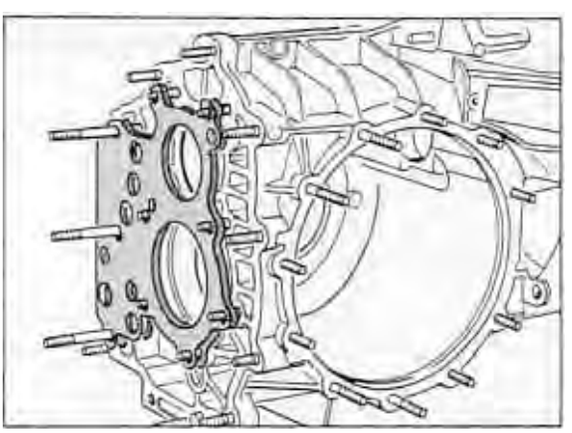

506-34

2. Engage 4th gear and assemble fully preassembled gear set to internal selector rod.

3. Tighten tensioning plate lock nuts to 23 Nm (17 ftlb).

Note

Do not move shift rods across the neutral or gear stop position as this may cause the small intermediate locks to drop out inadvertently.

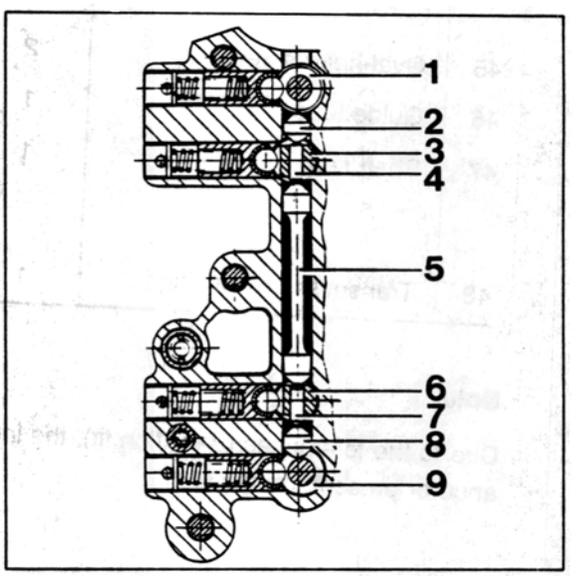

1709-35

4 and 7 = Intermediate locks

34 50 37 Dismantl g d ssembl termed ate casi

ools

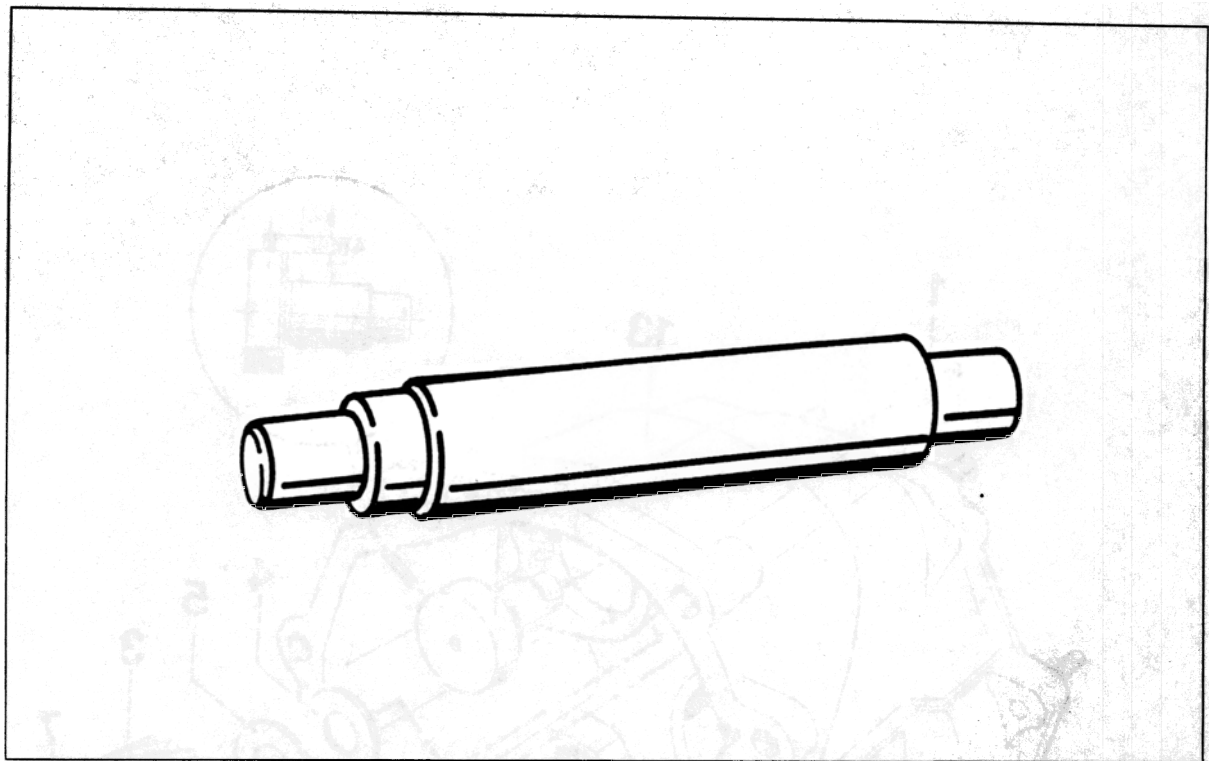

No.	Designation	Special tool	Order number	Explanation
	Mandrel	9254	000.721.925.40	

Dismantling and assembling intermediate casing

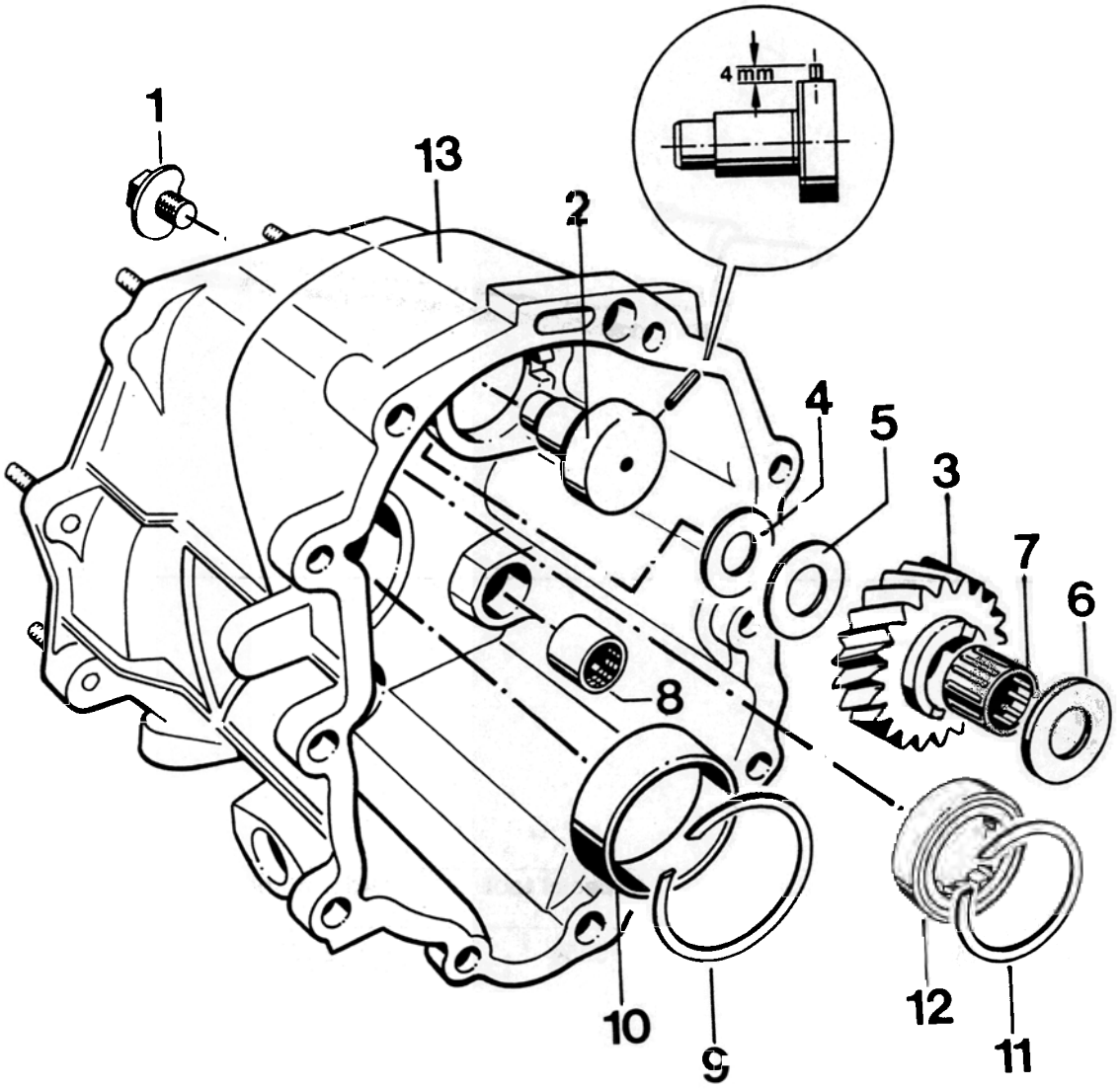

1989-34

No.	Designation	Qty.	Note: Removal	Installation
1	Hexagon head bolt with washer	1		M_A = 23 Nm (17 ftlb.)
2	Pin with roll pin	1		Install in correct position
3	Reverse idler gear	1		Small flange faces hexagon head bolt (item No. 1)
4	Thrust washer (2.0 mm thick)	1		
5	Thrust washer (1.5 mm thick)	1		Do not confuse with washer No. 4
6	Thrust washer (1,5 mm thick)	1		Do not confuse with washer No. 4
7	Needle roller assembly	1		
8	Ball sleeve	1	Push out with suitable drift or a length of pipe (e.g. VW 423)	Working from inside, press in flush across lettered side using 9254
9	Snap ring	1		
10	Bearing outer race	1	Heat housing to approx. 120 °C	Heat housing to approx. 120 °C
11	Snap ring	1		
12	Cylindrical roller bearing	1	Heat housing to approx. 120 °C and pull out with suitable internal puller (e.g. Schrem 30 - 40)	As No. 10
13	Housing	1		

Notes on assembly

1. Reassemble reverse idler gear with thrust washers and bolt in correct position (refer to exploded view). With thrust washers and bolt located correctly, the end clearance of the reverse idler gear is 0.15...0.35 mm.

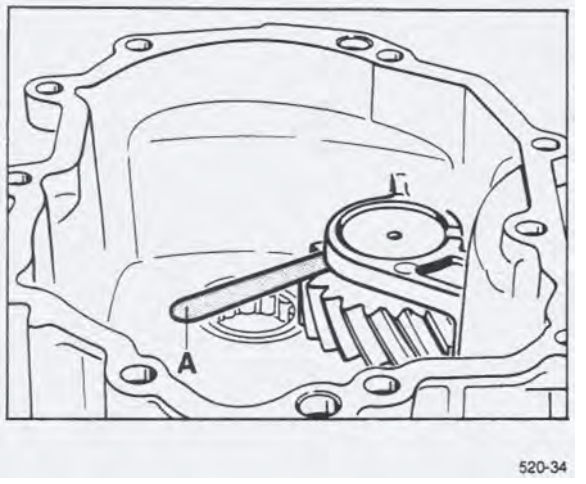

A = Feeler gauge

2. Check end clearance of reverse idler gear with feeler gauge.

34 52 37 Dismantling and assembling gear housing

Tools

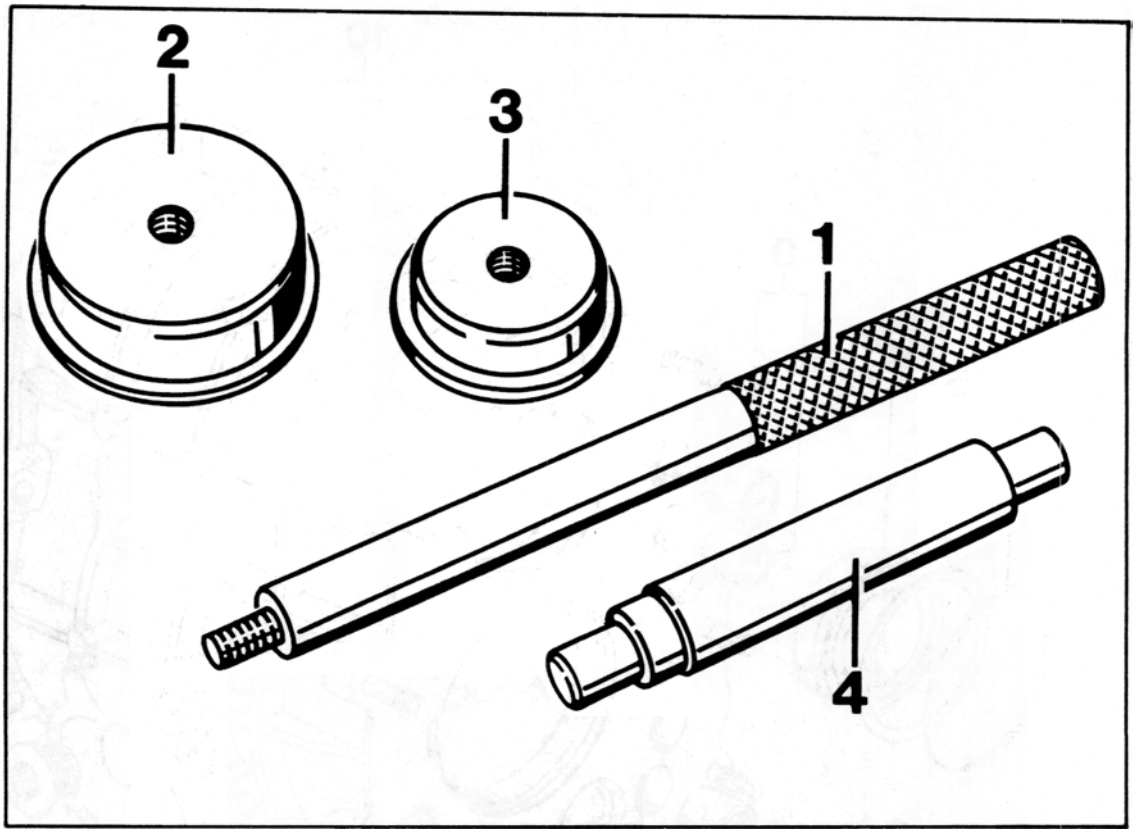

No.	Designation	Special tool	Order number	Explanation
1	Mandrel	P 254	000.721.254.00	
2	Thrust piece	P 254 a	000.721.254.10	
3	Thrust piece	P 254 b	000.721.254.20	
4	Mandrel	9254	000.721.925.40	

Printed in Germany - IX. 1994

34 52 37 Dismantling and assembling gear housing

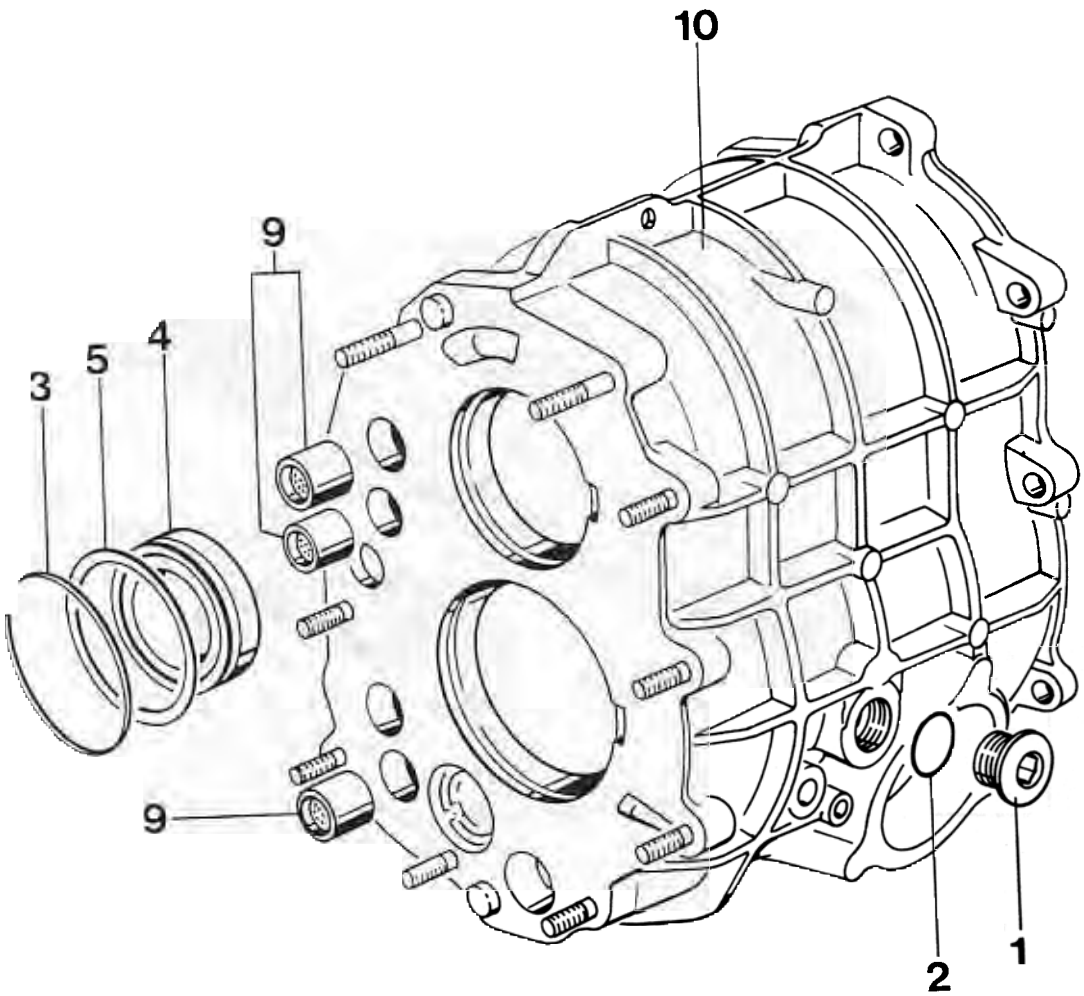

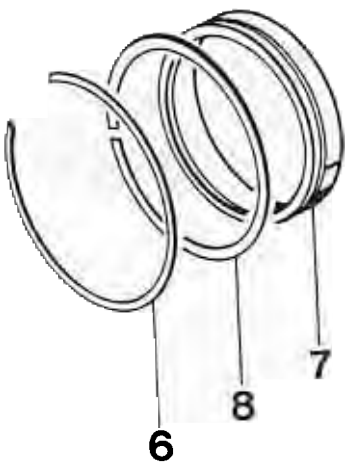

No.	Designation	Qty.	Note: Removal	Installation
1	Plug	1		Torque: 30 Nm (22 ftlb.)
2	Seal	1		Replace
3	Retaining ring	1		
4	Bearing outer race	1	Working from inside, press out with Special Tools P 254 and P 254 b	Press in with Special Tools P 254 and P 254 b
5	Snap ring	1		
6	Retaining ring	1		
7	Bearing outer race	1	Working from inside, press out with Special Tools P 254 and P 254 b	Press in with Special Tools P 254 and P 254 b
8	Snap ring	1		
9	Ball sleeve	3	Press out with suitable mandrel	Press in flush with Special Tool 9254
10	Gear housing	1		

Printed in Germany - IX. 1994

34 37 37 Dismantling and assembling transmission housing

Tools

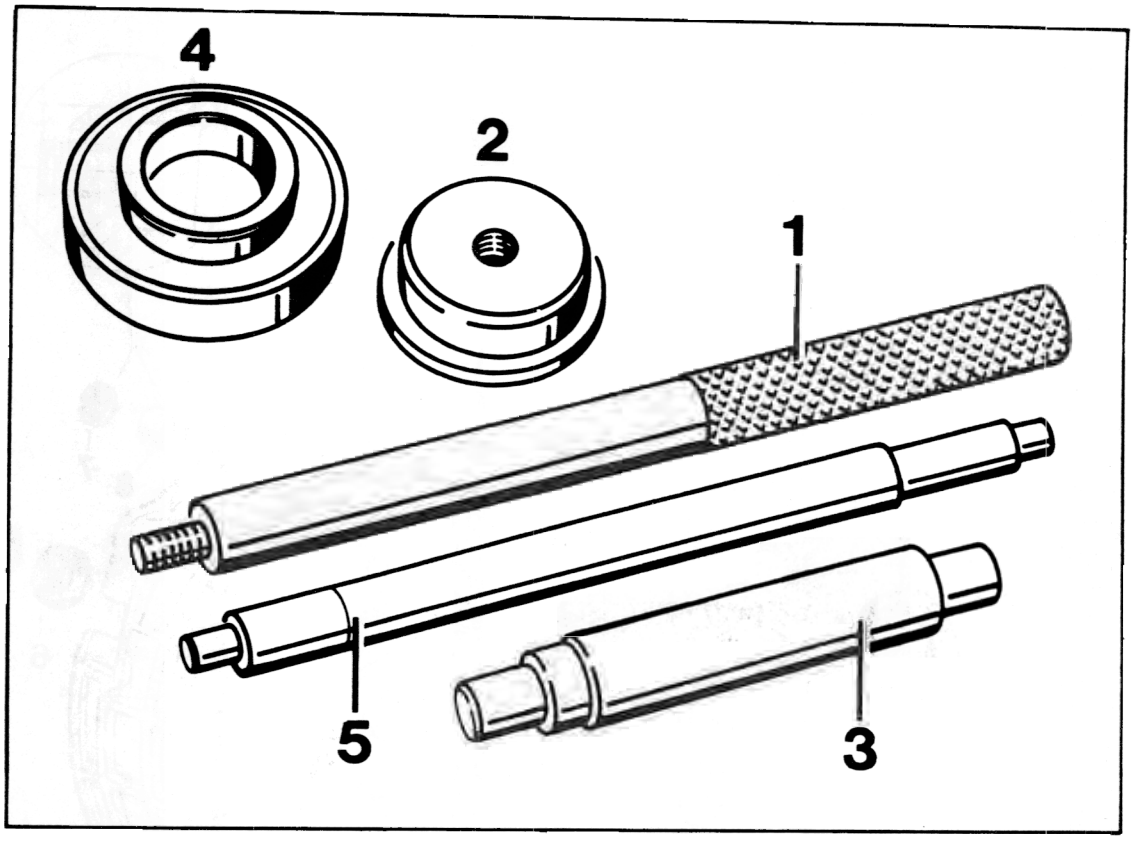

No.	Designation	Special tool	Order number	Explanation
1	Mandrel	P 254	000.721.254.00	
2	Thrust piece	P 254 b	000.721.254.20	
3	Mandrel	9254	000.721.925.40	
4	Thrust piece	9252	000.721.925.20	
5	Mandrel	9515	000.721.951.50	

34 37 37 Dismantling and assembling transmission housing

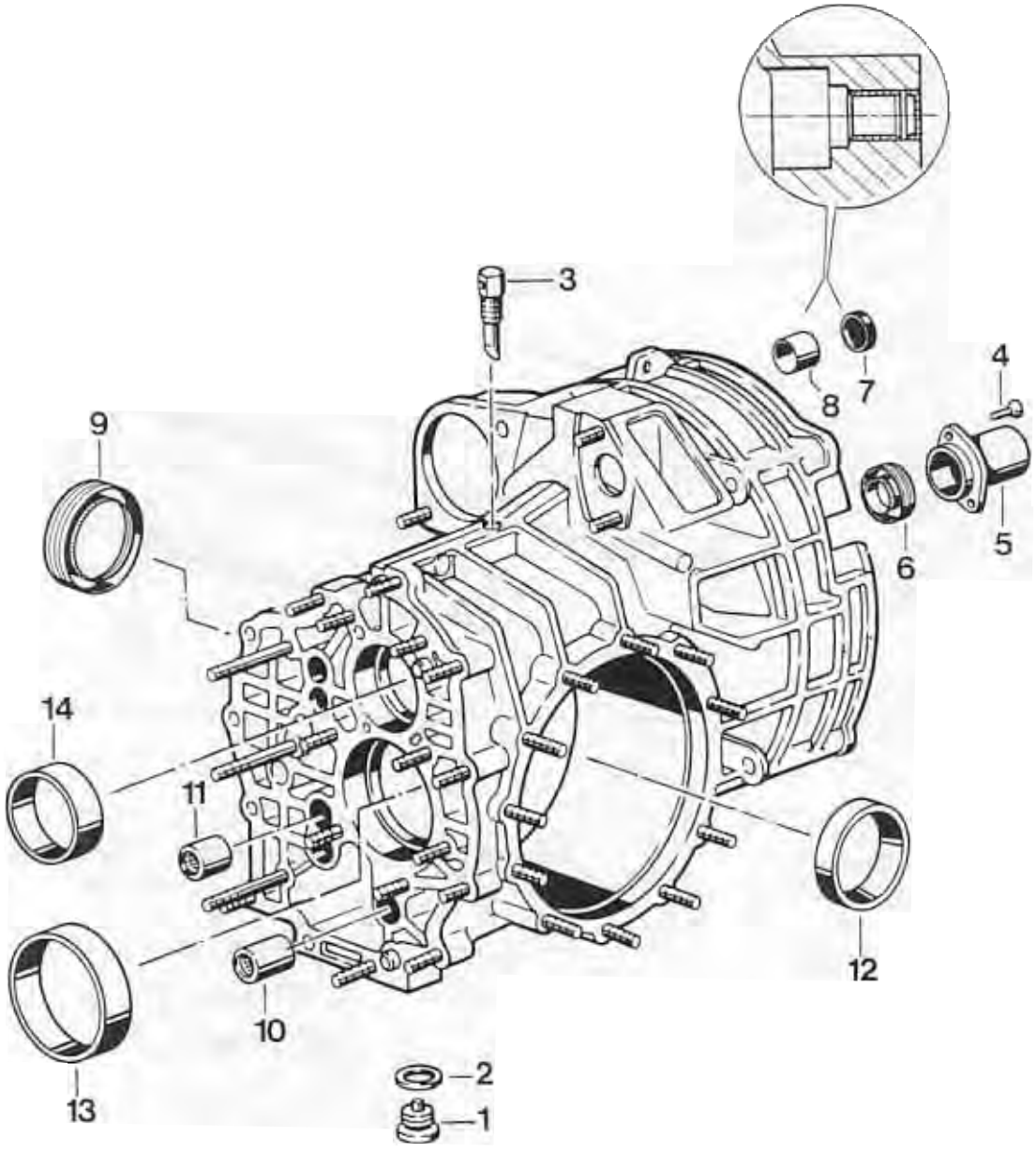

No.	Designation	Qty.	Note: Removal	Installation
1	Plug	1		Clean, tighten to 30 Nm (22 ftlb.)
2	Seal	1		Replace
3	Vent	1		Tighten to 35 Nm (26 ftlb.). The hole in the hexagon head must face the transfer casing
4	Oval-head screw	2		Tighten to 10 Nm (7 ftlb.)
5	Guide tube	1		
6	Shaft seal	1		Do not fit until the gear set has been fitted (also refer to page 35 - 201)
7	Cover	1		
8	Bushing	1	Push out with drift 9515, working from inside towards outside	Do not grease or oil and do not clean with solvents (e.g. benzene). Push in from inside with drift 9515 until it is seated against the stop.
9	Shaft seal	1		Push in with Special Tool 9252 until it is seated against the stop. Pace space between dust lip and sealing lip with grease (e.g. Liqui Moly Pu 53)
10	Ball sleeve (long)	1	Pull out with suitable internal puller (e.g. Schrem 14 - 20)	Press in flush with Special Tool 9254
11	Ball sleeve (short)	4	Pull out with suitable internal puller (e.g. Schrem 14 - 20)	Press in flush with Special Tool 9254

No.	Designation	Qty.	Note: Removal	Installation
12	Bearing outer race	1	Heat transmission housing to approx. 120 °C and remove race with suitable drift	Heat transmission housing to approx. 120 °C and press in with suitable thrust piece
13	Bearing outer race	1	Heat transmission housing to approx. 120 °C and remove race with suitable thrust piece (e.g. VW 513)	Heat transmission housing to approx. 120 °C and press in with suitable thrust piece (e.g. 9247/4) until it is seated against the stop
14	Bearing outer race	1	Heat transmission housing to approx. 120 °C and pull put with suitable internal puller (e.g. Schrem 50 - 60)	Heat transmission housing to approx. 120 °C and press in with Special Tools P 254 and P 254 b until it is seated against the stop
15	Transmission housing	1		

35 50 19 Removing and installing input shaft oil seal

Removing

1. Remove engine/transmission assembly and separate transmission from engine.

2. Remove release bearing guide tube.

3. Screw Special Tool **9251** firmly into the oil seal.

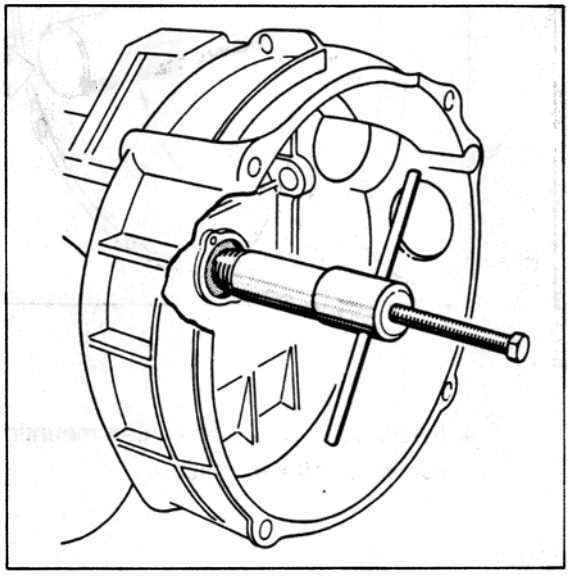

1652-34

4. Screw in the hexagon-head bolt and pull out oil seal.

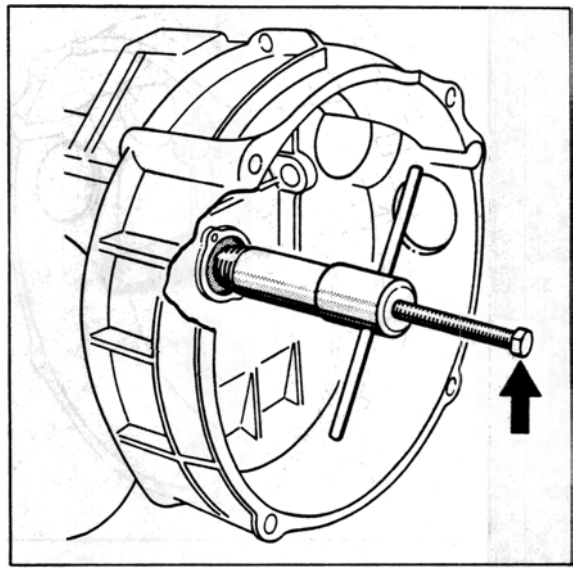

1653-34

Note

If the helical tension spring jumps out when removing the seal, use a wire hook to pull it off the input shaft.

Installing

1. Push assembling sleeve **9255** onto the input shaft splines.

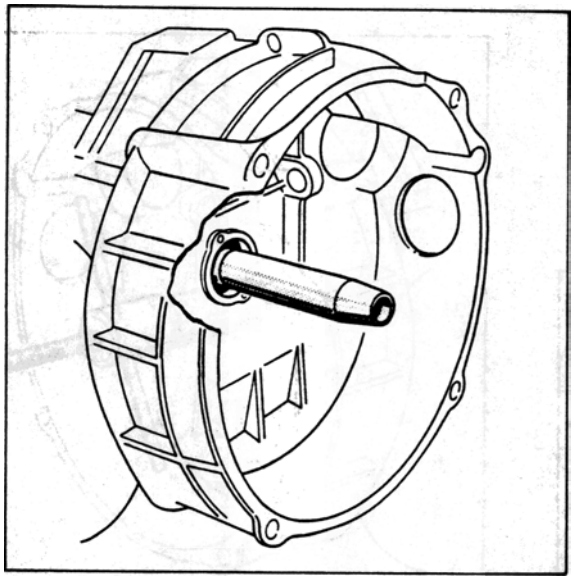

1654-34

2. Pack oil seal area between dust lip and sealing lip with grease (e.g. Liqui Moly Pu 53).

3. Use Special Tool **9256** to drive the oil seal into place.

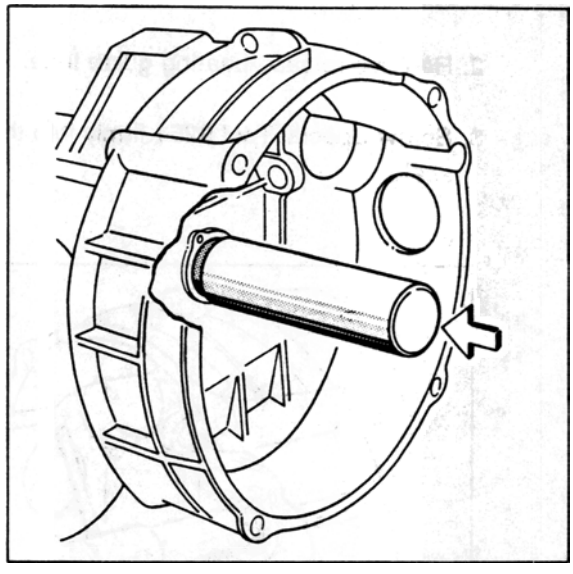

1655-34

4. Install guide tube and tighten mounting screws to **10 Nm** (7 ftlb.).

35 19 37 Dismantling and assembling tensioning plate

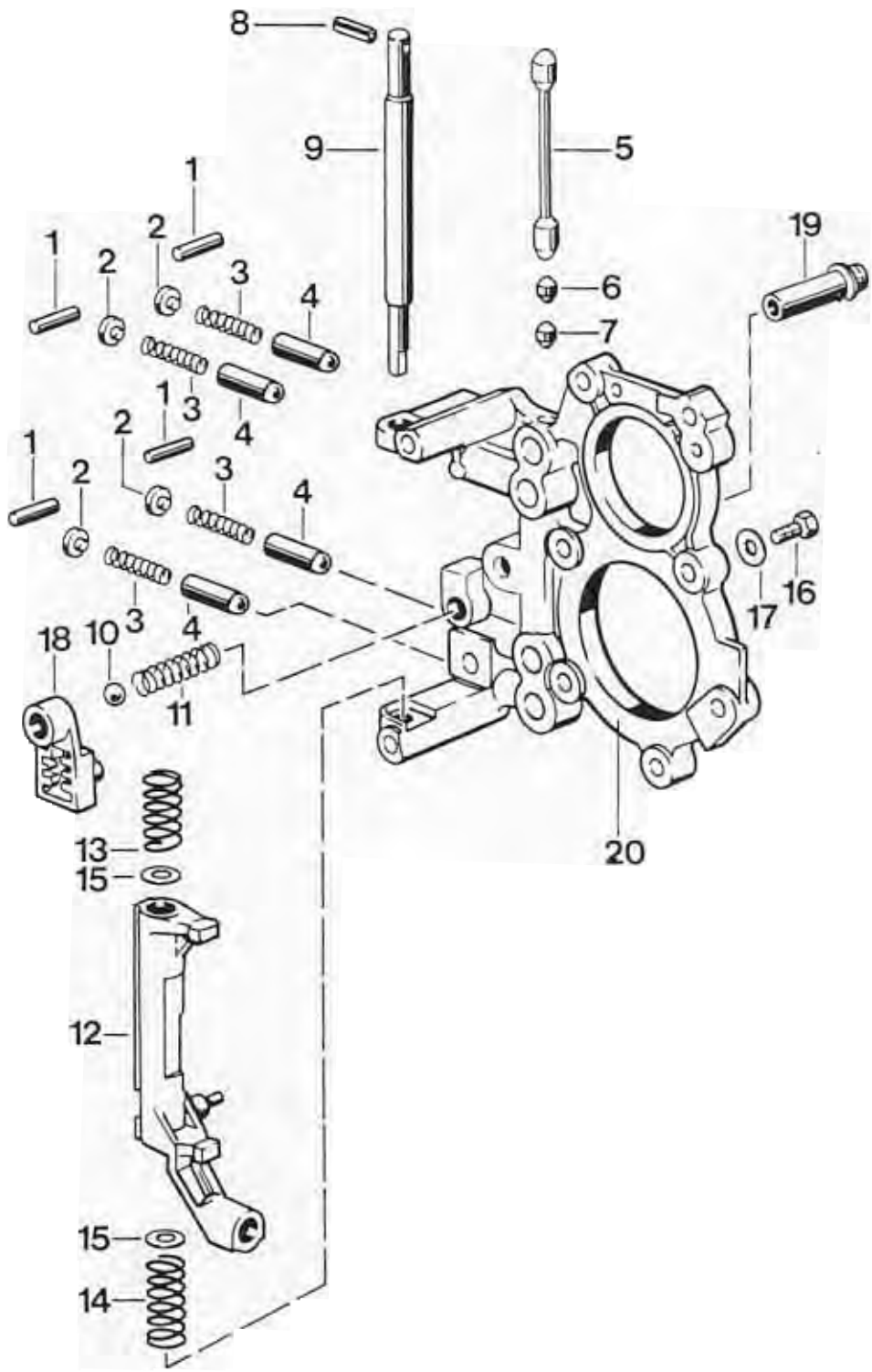

No.	Designation	Qty.	Note: Removal	Installation
1	Straight pin	4	With the shift rods fitted, the springs (No. 3) are under load	
2	Washer	4		
3	Thrust spring	4		
4	Locking bush	4		
5	Lock (long)	1		
6	Lock (short)	1		
7	Lock (short)	1		
8	Roll pin	1		
9	Bearing shaft	1		Install in correct position, use 8 mm dia. locating mandrel to locate relative to tensioning plate hole
10	Ball	1		
11	Thrust spring	1		
12	Deflection lever	1		
13	Thrust spring	1	Mark for reinstallation	Free length = 51.3 + 0.5 mm wire thickness = 1.5 mm. Do not cnfuse with spring No. 14
14	Thrust spring	1	Mark for reinstallation	Free length = 72.6 + 0.5 mm wire thickness = 1.1 mm. Do not confuse with spring No. 13
15	Shim	2		

Printed in Germany - IX. 1994

No.	Designation	Qty.	Note: Removal	Installation
16	Hexagon head bolt	1		Tighten to 10 Nm (7 ftlb.)
17	Washer	1		
18	Selector gate	1		
19	Adapter sleeve with snap ring	1	Press out with suitable drift	Press in with suitable drift until it is seated against the stop
20	Tensioning plate	1		

Installation position of the locks

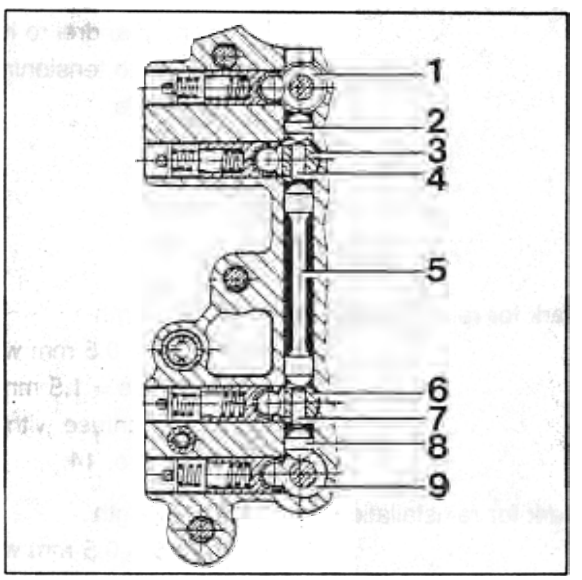

1709-35

35 40 19 Removing and installing input shaft

Tools

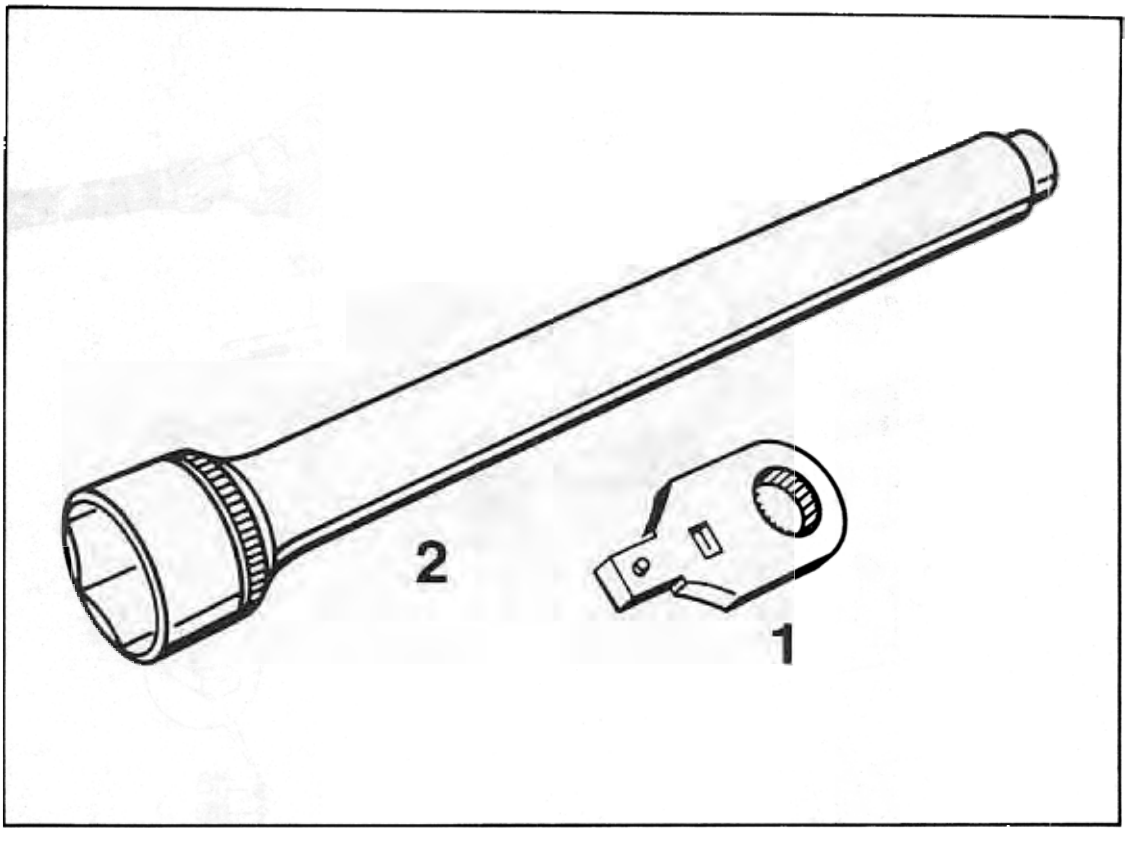

No.	Designation	Special tool	Order number	Explanation
1	Insert	9282	000.721.928.20	
2	Socket	9105	000.721.910.50	

35 40 19 Removing and installing input shaft

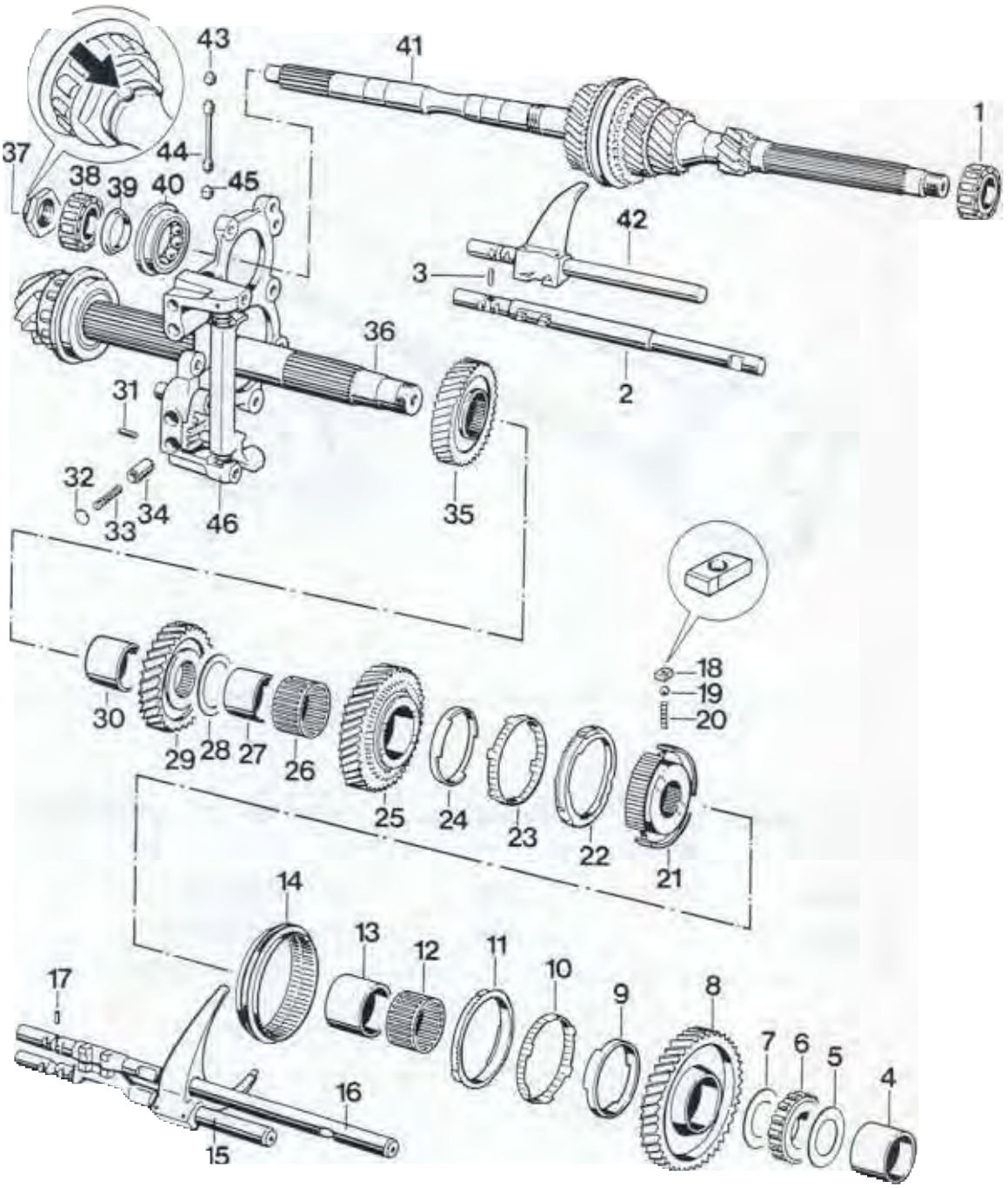

No.	Designation	Qty.	Note: Removal	Installation
1	Cylindrical roller bearing	1		Heat to approx. 120 °C
2	Shift rod (5th and 6th gear)	1	Shift rods in neutral position	
3	Spacer	1		Coat with stiff grease to insert
4	Inner race	1		Fit with the same gearwheel. Heat to approx. 120 °C
5	Thrust washer	1		
6	Cylindrical roller bearing	1		Heat to approx. 120 °C
7	Thrust washer	1		
8	Loose gearwheel (1st gear)	1		
9	Friction ring	1		Fit with the same gearwheel
10	Tapered ring	1		Fit with the same gearwheel. Tabs must engage into the cutouts in the loose gearwheel
11	Synchronizing ring	1		Check for wear. Fit with the same gearwheel. Drivers must engage in the cutouts in the tapered ring. Three lugs face the driver dogs.
12	Needle roller bearing	1		Fit with the same gearwheel
13	Inner race	1		Fit with the same gearwheel. Heat to approx. 120 °C

No.	Designation	Qty.	Note: Removal	Installation
14	Shift sleeve	1		Insert complete with guide sleeve and shift rods. Make sure the missing tooth of the internal teeth of the guide sleeve (No. 21) is aligned exactly above the oil bore of the output shaft. The circumferential identification groove must face 2nd gear. The centerpunch marks must be centered relative to the balls (see page 35 - 213)
15	Shift rod with pinned shift fork	1		
16	Shift rod (reverse)	1		
17	Intermediate lock	1		Coat with stiff grease to insert
18	Driver dog	3		Install in correct position
19	Ball	3		
20	Spring	3		
21	Guide sleeve	1		Missing tooth of the internal splines must be exactly above the oil bore of the output shaft
22	Synchronizing ring	1		Check for wear. Fit with the same gearwheel. Drivers must engage into the cutouts in the tapered sleeve. Three lugs face the driver dogs.

No.	Designation	Qty.	Note: Removal	Installation
23	Tapered ring	1		Fit with the same gearwheel. Tabs must engage into the cutouts in the loose gearwheel
24	Friction ring	1		Fit with the same gearwheel
25	Loose gearwheel (2nd gear)	1		
26	Needle roller bearing	1		Fit with the same gearwheel
27	Inner race	1		Fit with the same gearwheel. Heat to approx. 120 °C
28	Thrust washer	1		
29	Fixed gearwheel (3rd gear)	1		Large collar faces thrust washer No. 28
30	Spacer sleeve	1		
31	Straight pin	4		
32	Washer	4		Guide lug faces spring
33	Thrust spring	4		
34	Latch	4		
35	Fixed gearwheel (4th gear)	1		Large collar faces four-point bearing
36	Output shaft	1		
37	Flange nut*	1	Undo with Special Tools 9282 and 9105	Tighten to 250 Nm (184 ftlb.). Upset the flange to lock
38	Cylindrical roller bearing	1	Press off across 2nd gear fixed gearwheel	Heat to approx. 120 °C
39	Bearing inner race	1		Heat to approx. 120 °C

Printed in Germany - 20, 1997

No.	Designation	Qty.	Note: Removal	Installation
40	Four-point bearing	1		
41	Output shaft	1		Insert complete with pinned shift rod / shift fork (No. 42)
42	Shift rod with pinned shift fork	1		
43	Lock (short)	1		
44	Lock (long)	1		
45	Lock (short)	1		
46	Tensioning plate	1		

Transmission shafts without recesses for securing the hexagon nuts have been installed since September 1995.
Self-locking hexagon nuts are used on these shafts, and these nuts must **always** be replaced in every transmission repair.

Removal and installing notes

Removal

Note

Parts No. 1 to 30 are removed with the tensioning plate remaining fitted (refer to page 34 - 209).

Installation

1. Using a suitable flat iron bar, clamp tensioning plate in a vise in such a manner that the hole for the shift rod locks is horizontal.

2. Check synchromesh of 1st and 2nd gears. To do so, place friction ring, tapered ring and synchronizing ring in correct position onto gearwheel. Check gap "A" with a feeler gauge.
   Installation dimension (new) = 1.5 to 2.0 mm
   Wear limit = 1.2 mm

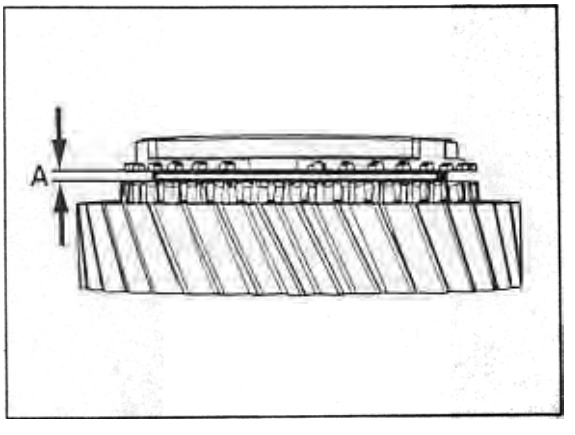

1701-35

3. Place shift sleeve onto guide sleeve so that centerpunch marks "B" are centered relative to the balls.
   In addition, the circumferential identification groove "A" must face 2nd gear.

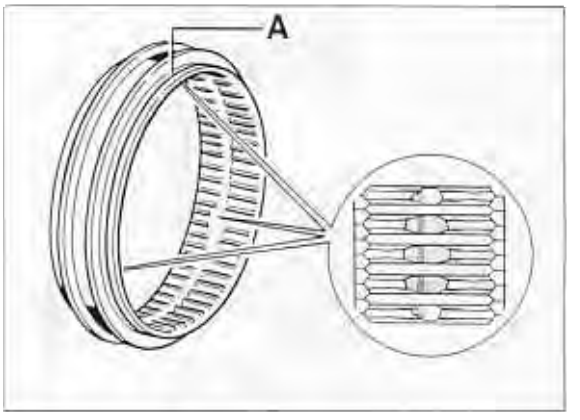

A = Identification groove (must face 2nd gear)

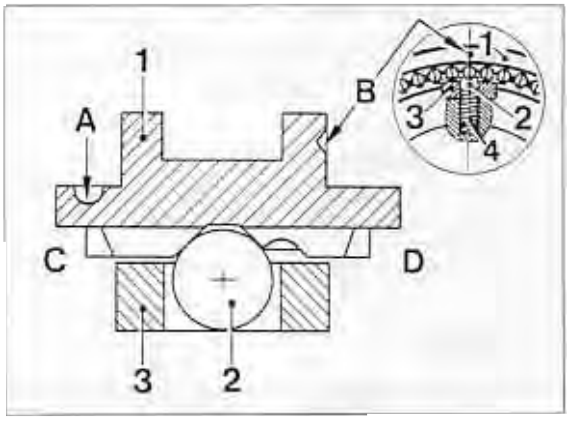

1906-35

1 = Shift sleeve
2 = Ball
3 = Driver dog
4 = Spring
A = Identification groove
B = Centerpunch mark
C = 2nd gear side
D = 1st gear side

4. Observe installation position of locks.

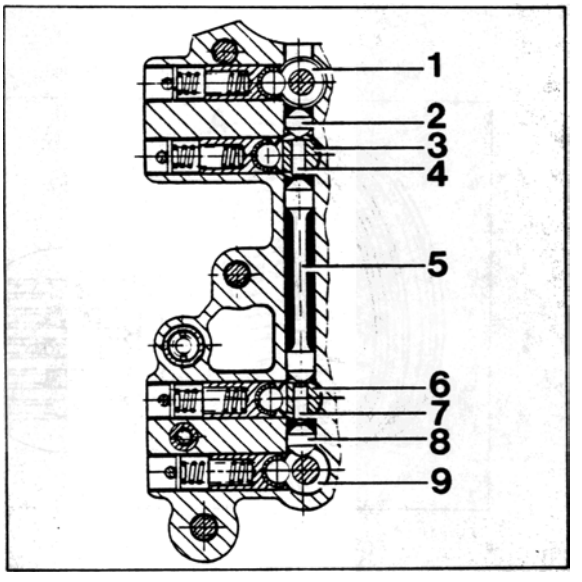

1709-35

1 = Shift rod 3rd and 4th gear
2 = Lock (short)
3 = Shift rod 5th and 6th gear
4 = Intermediate lock
5 = Lock (long)
6 = Reverse shift rod
7 = Intermediate lock
8 = Lock (short)
9 = Shift rod 1st and 2nd gear

Note

After fitting the shift rods, do not move them across the neutral or gear latch positions as this may cause the small intermediate locks to drop out inadvertently.
To avoid inadvertent movement of the shift rods, lock shift rods by engaging 3th gear.

35 40 37 Dismantling and assembling input shaft

Tools

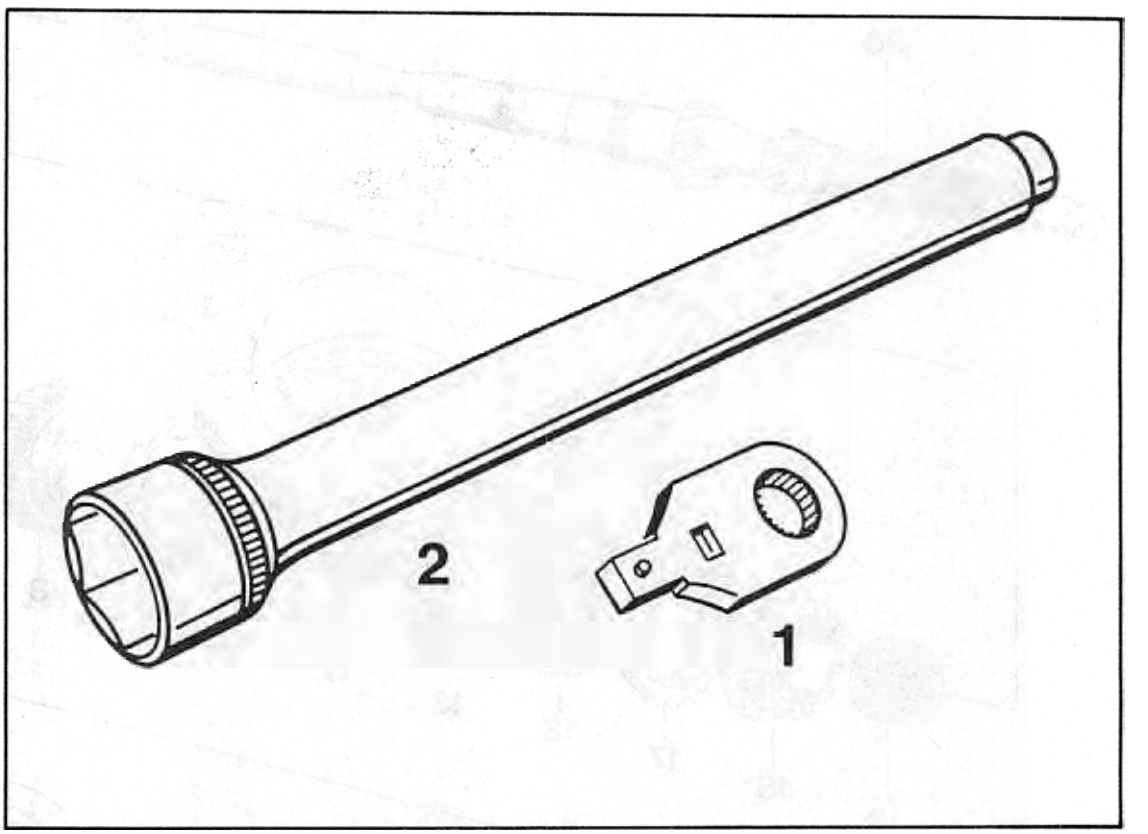

No.	Designation	Special tool	Order number	Explanation
1	Insert	9282	000.721.928.20	
2	Socket	9105	000.721.910.50	

35 40 37 Dismantling and assembling input shaft

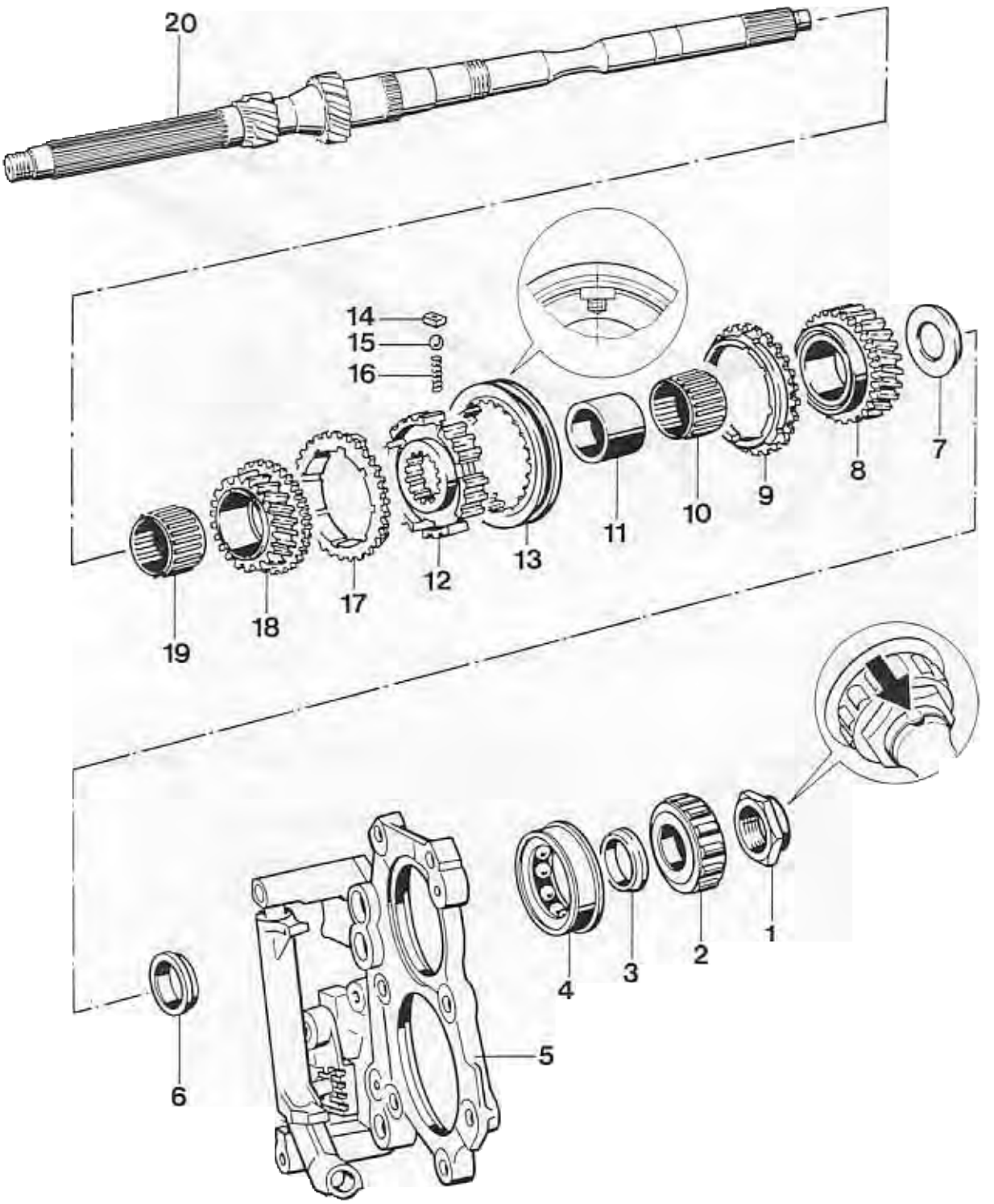

No.	Designation	Qty.	Note: Removal	Installation
1	Hexagon nut*	1	Undo with Special Tools 9282 and 9105	Use Special Tools 9282 and 9105 and tighten to 250 Nm (184 ftlb.). Upset flange to lock
2	Cylindrical roller bearing	1	Press off with suitable separating device (e.g. Kukko 17-1) across 2nd gear fixed gearwheel	Heat to approx. 120 °C
3	Bearing inner race	1	Press off with suitable separating device (e.g. Kukko 17-1) across 2nd gear fixed gearwheel	Heat to approx. 120 °C
4	Four-point bearing	1		
5	Tensioning plate	1		Clamp in a vise (use protective jaws), insert lock (long), engage 5th gear and install input shaft with pinned shift rod/shift fork
6	Bearing inner race	1	Press off with suitable separating device (e.g. Kukko 17-1)	Heat to approx. 120 °C
7	Thrust washer	1		Large, face-ground side faces needle cage
8	Loose gearwheel (4th gear)	1		Replace only in pairs
9	Synchronizing ring	1	Mark for reinstallation	Check for wear, install in correct position using the same gearwheel (lugs face the driver dogs)

Printed in Germany - 20, 1997

No.	Designation	Qty.	Note: Removal	Installation
10	Needle-roller assembly	1	Mark cage	Install with the same gear-wheel
11	Inner race	1		Heat to approx. 120 °C
12	Guide sleeve	1	Remove complete with shift sleeve	Install complete with shaft sleeve and synchromesh components
13	Shift sleeve (3rd and 4th gear)	1	Make sure synchromesh components do not pop out.	Observe installation position, install complete with guide sleeve and synchro-mesh components. Center the center-punch marks relative to the driver dogs
14	Driver dogs	3		Install in correct position, domed side faces shift sleeve
15	Ball	3		
16	Spring	3		
17	Synchronizing ring	1	Mark for reinstallation	Check for wear, install in correct position with the same gearwheel (lugs face the driver dogs)
18	Loose gearwheel (3rd gear)	1		Replace only in pairs
19	Needle-roller assembly	1	Mark for reinstallation	Fit with the same gear-wheel
20	Drive shaft	1		

* Transmission shafts without recesses for securing the hexagon nuts have been installed since September 1995.
Self-locking hexagon nuts are used on these shafts, and these nuts must **always** be replaced in every repair.

Printed in Germany 20 1997

Dismantling and assembling notes

Dismantling

1. Mount retaining plate **9282** in vise, fit input shaft and undo hexagon-head nut with Special Tool **9105**.

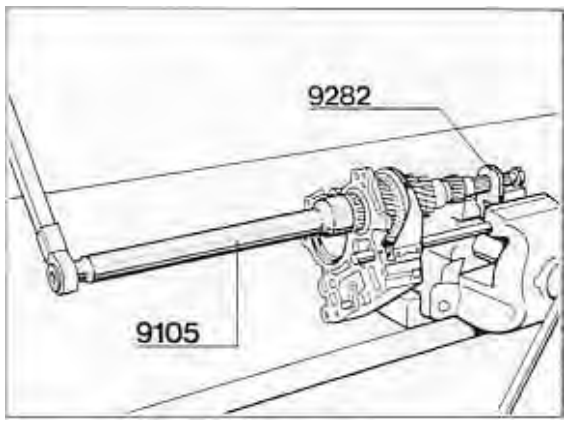

535-35

2. Use a suitable tool (e.g. Kukko 17 - 1) to press all parts off the input shaft over the 2nd gear wheel.

Assembling

1. To inspect synchronizing rings, press rings onto the gear wheel tapers and use a feeler gauge to measure gap "A".

Assembly dimension (new)	= 0.9 mm min.
Wear limit	= 0.6 to 0.7 mm

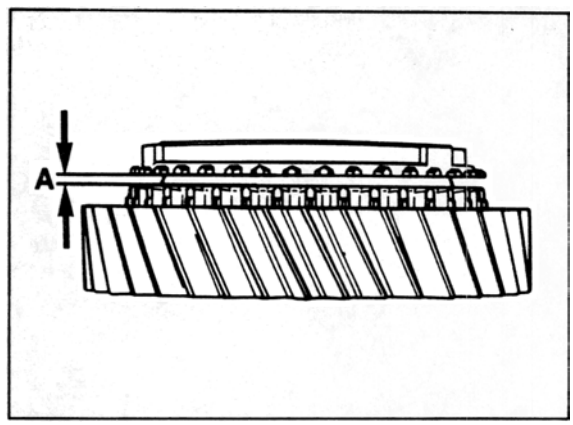

518-35

35 59 37 Dismantling and assembling output shaft

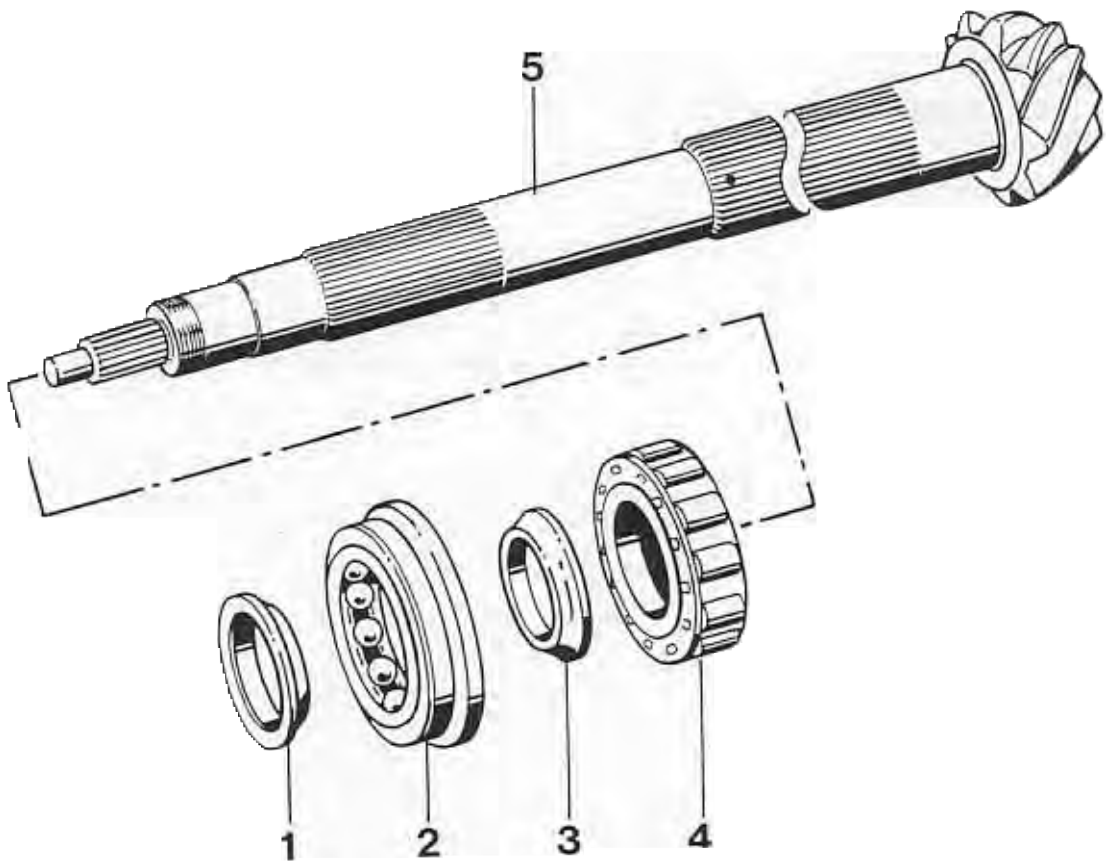

2012-35

No.	Designation	Qty.	Note: Removal	Installation
1	Bearing inner race	1	Mark for reinstallation, press off with suitable separating device (e.g. Kukko 15 - 17)	Do not confuse with inner race No. 3 , heat to approx. 120 °C and press into place
2	Four-point bearing	1		
3	Bearing inner race	1	Mark for reinstallation, press off with suitable separating device (e.g. Kukko 15 - 17)	Do not confuse with inner race No. 1, heat to approx. 120 °C and press into place
4	Cylindrical roller bearing	1	Press off with suitable separating device (e.g. Kukko 15 - 17)	Heat to approx. 120 °C and press into correct position using a suitable pipe section (e.g. VW 519)
5	Output shaft	1		Observe matching number. Readjust if required

39 66 37 Dismantling and assembling transfer casing

Tools

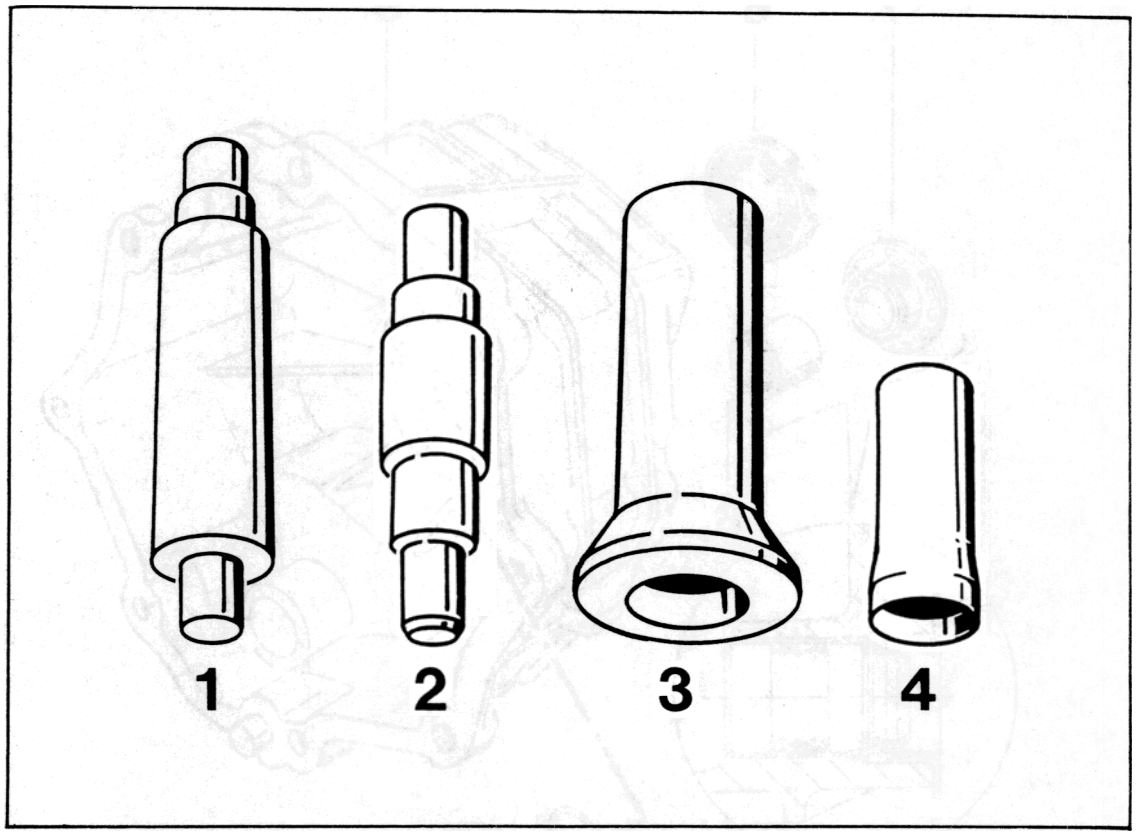

No.	Designation	Special tool	Order number	Explanation
1	Mandrel	9254	000.721.925.40	
2	Mandrel	9223	000.721.922.30	
3	Thrust piece	9234	000.721.923.40	
4	Assembly sleeve	9575	000.721.957.50	

Printed in Germany – 9. 1994

39 66 37 Dismantling and assembling transfer casing

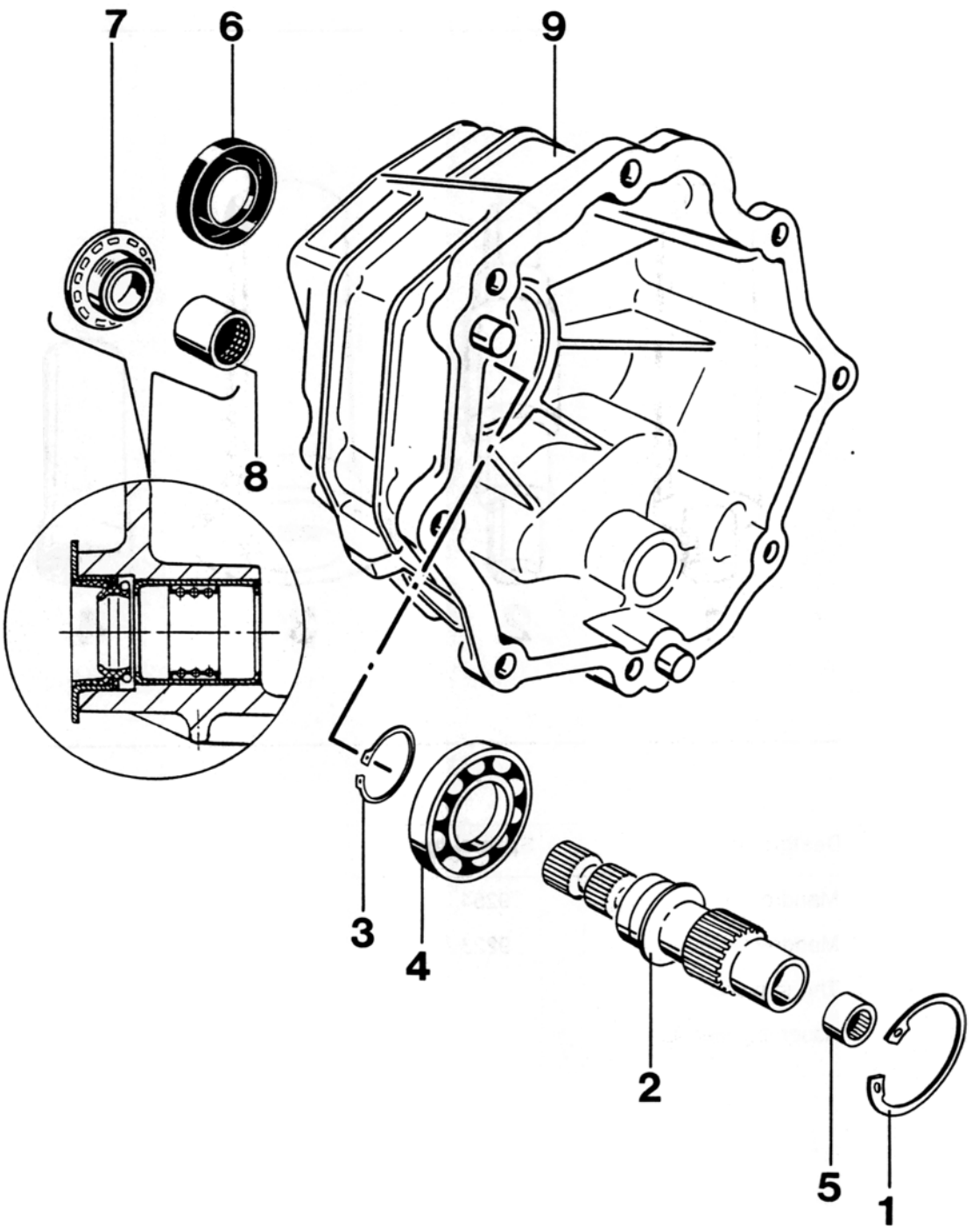

1990-34

No.	Designation	Qty.	Note: Removal	Installation
1	Snap ring	1		
2	Output shaft	1		
3	Snap ring	1		
4	Deep-groove ball bearing	1	Press off	Heat to approx. 120 °C
5	Needle roller bearing sleeve	1	Pull out with internal puller	Replace, drive in flush with suitable drift (e.g. P 361)
6	Oil seal	1		Replace, drive in with Special Tool 9575 and 9234 after fitting the output shaft
7	Oil seal	1		Replace, pack space between dust lip and sealing lip with grease (e.g. Liqui Moly Pu 53), push in to stop with Special Tool 9254
8	Ball sleeve	1	Press out with suitable drift or pipe section (e.g. VW 423)	Replace, drive home into correct position using Special Tool 9223
9	Housing	1		

Printed in Germany – 9. 1994

39 60 01 Checking operation of installed viscous clutch

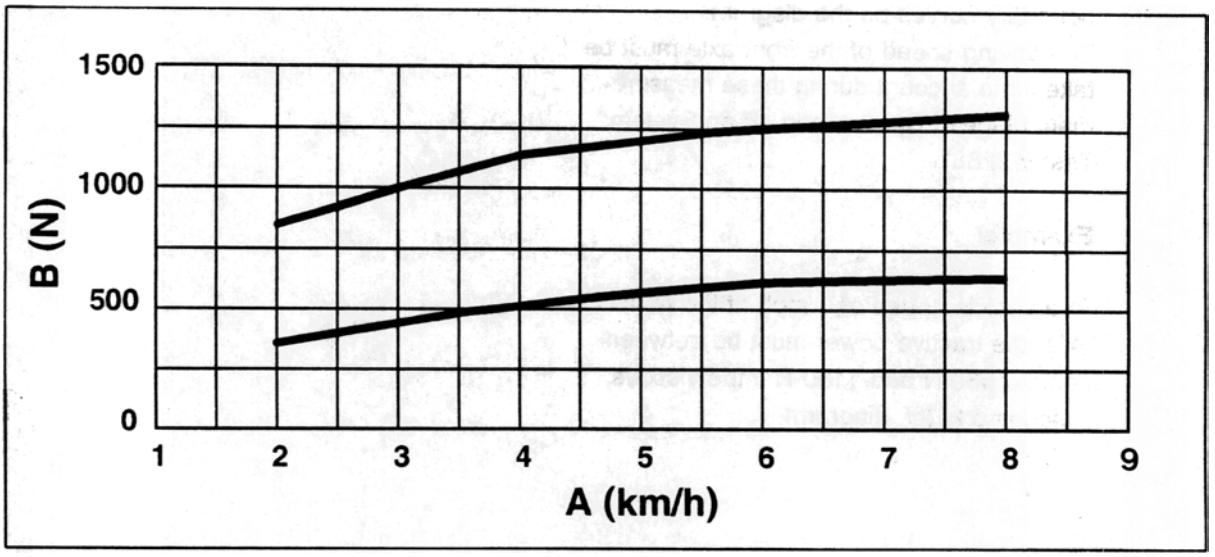

2019-39

A = Driving speed of front axle in kilometers per hour
B = Pulling power of front wheels in Newton (N)

Test conditions:

To check, viscous clutch must be at room temperature

Test duration approx. 45 seconds (Determine measurement after 20 seconds)

Repeat measurement after viscous clutch has cooled off for 1 hour

1. Connect system tester and select „Actual values " menu (ABS speed) (Refer to Vol. VIII, page 45 - 37).

2. Place front wheels of vehicle onto brake dynamometer.

3. Switch off engine, engage parking brake and shift transmission into neutral position.

4. When the rollers have started, switch on ignition and press key > of system tester. The tester will then return to the point where diagnosis was interrupted.

5. Set front wheels into motion with dynamometer rollers **(max. 5 mph)** and determine tractive power of front wheels after 20 seconds.

Note

When measuring the wheels individually, add measurements obtained for both front wheels.

Printed in Germany - 12, 1995

5. The viscous clutch is operative if the tractive power of the front wheels is within the boundary curves on the diagram.
   The driving speed of the front axle must be taken into account during these measurements (speed can be read off on System Tester 9288).

   Example:

   At a vehicle speed of 3 mph at the front axle, the tractive power must be between approx. 580 N and 1180 N if the viscous clutch is o.k. (cf. diagram).

Printed in Germany – 9. 1994

39 40 19 Removing and installing differential lock

Tools

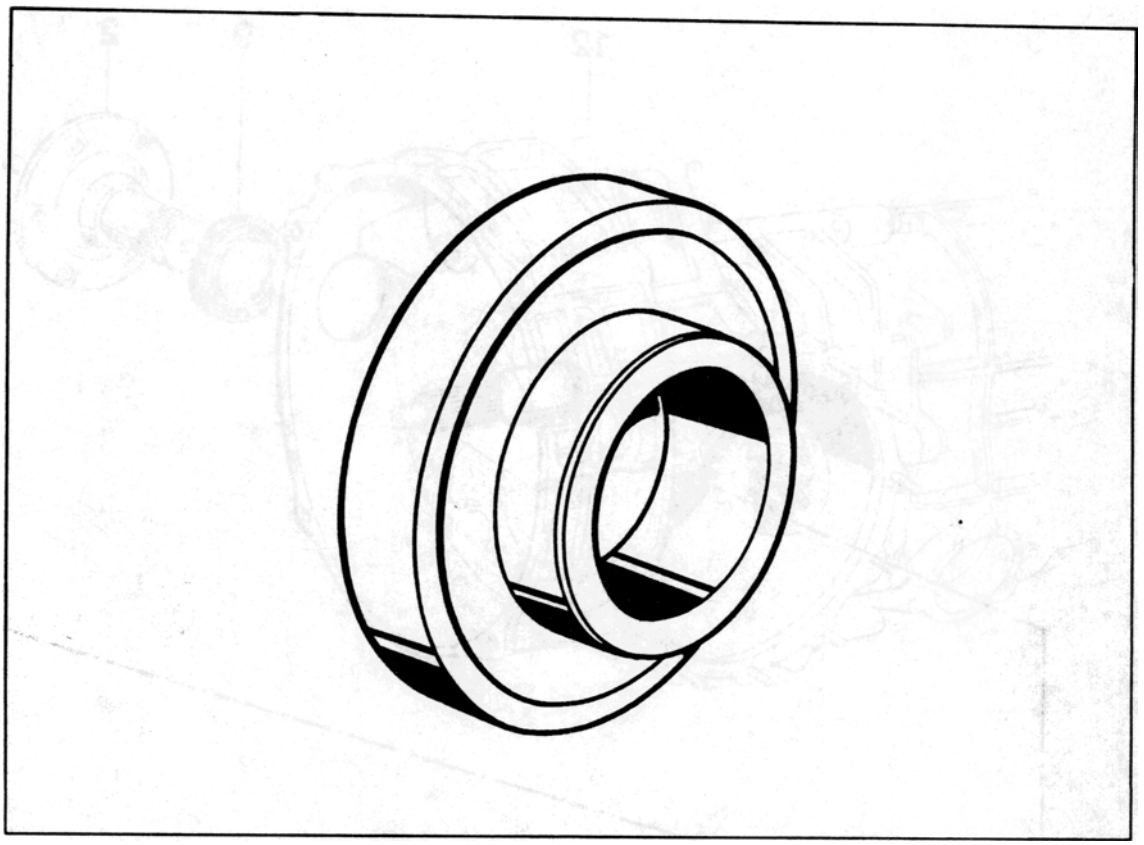

No.	Designation	Special tool	Order number	Explanation
	Thrust piece	9252	000.721.925.20	

39 40 19 Removing and installing differential lock

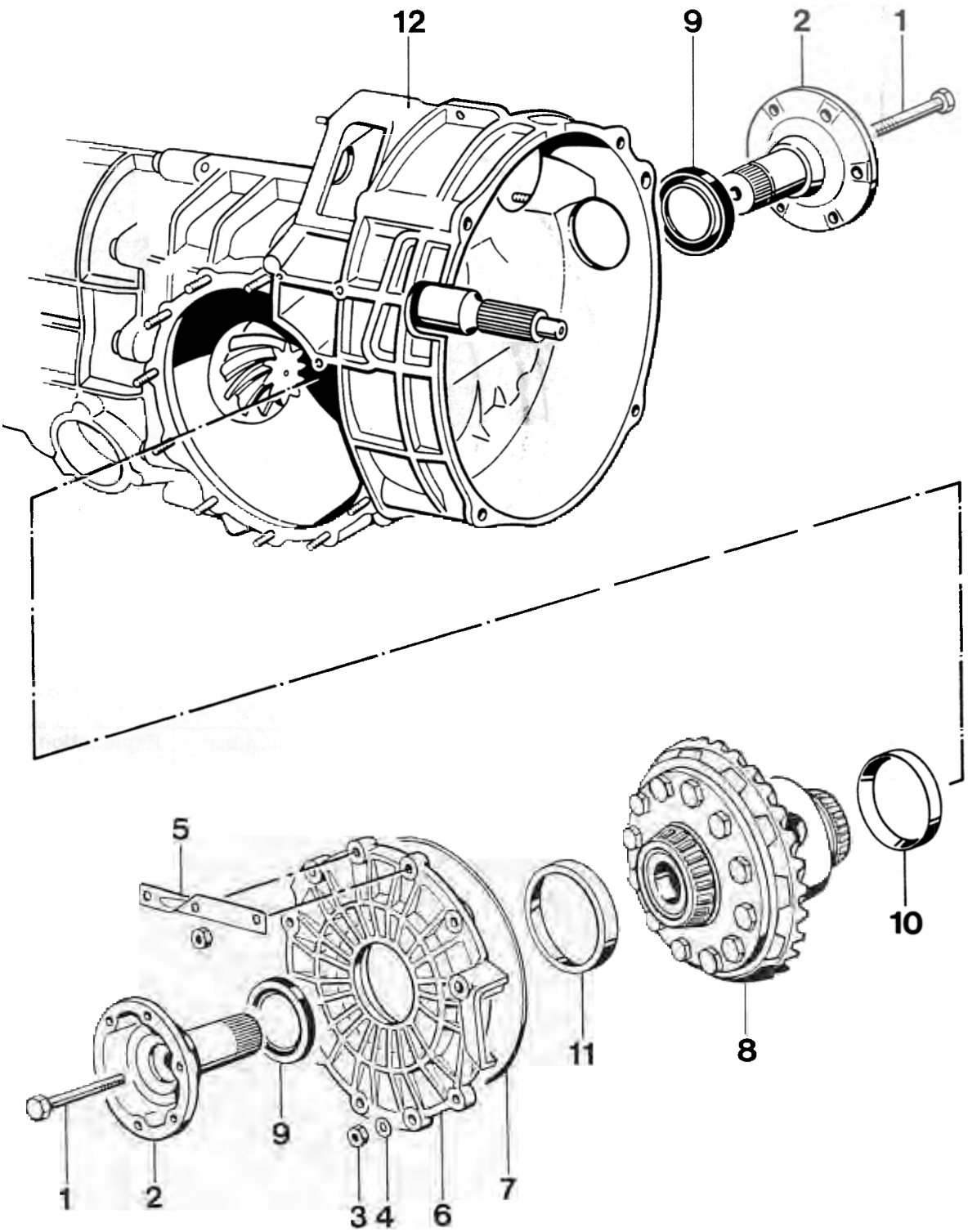

No.	Designation	Qty.	Note: Removal	Installation
1	Hexagon head bolt	2		Tighten to 44 Nm (32 ftlb.)
2	Joint flange*	2		
3	Hexagon head nut	11		Tighten to 23 Nm (17 ftlb.)
4	Washer	11		
5	Holder	1		
6	Cover	1		
7	O-ring	1		Replace, oil lightly, do not twist
8	Differential or limited-slip differential	1		Readjust if required
9	Seal*	2		Pack space between dust and sealing lips with grease (e.g. Liqui Moly Pu 53). Use thrust piece 9252 to press in until it is seated against the stop
10	Bearing outer race	1	Pull out with suitable internal puller (e.g. Kukko 21 - 8)	Press in with suitable thrust piece
11	Bearing outer race	1	Pull out with suitable internal puller (e.g. Kukko 21 - 9)	Press in with suitable thrust piece
12	gear box	1		

* The halfshaft flange and seal ring can also be removed and installed with the transmission installed.

39 08 15 Adjusting drive set

Tools

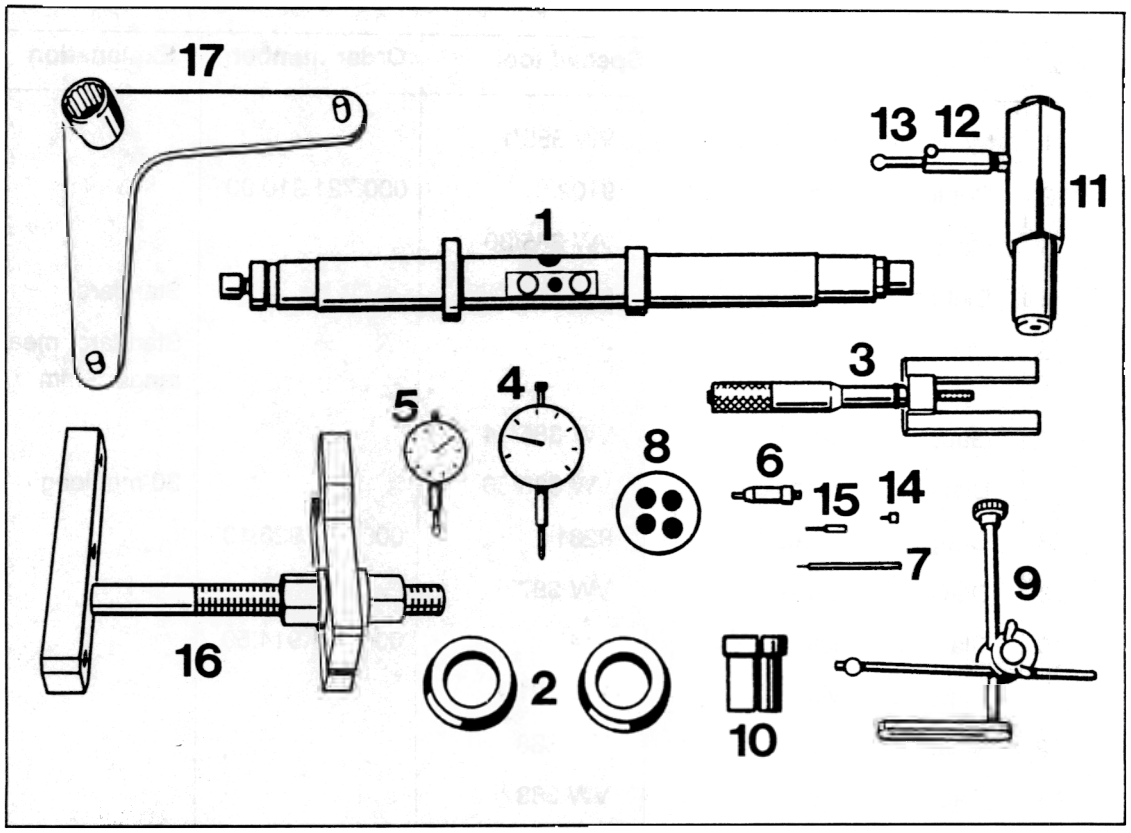

39 08 15 Adjusting drive set

Tools

No.	Designation	Special tool	Order number	Explanation
1	Measuring mandrel	VW 385/1		
2	Centering disks	9109	000.721.910.90	
3	Master gauge	VW 385/30		
4	Dial gauge	-		Standard
5	Dial gauge	-		Standard, measuring range 3 mm
6	Gauge plunger	VW 385/14		
7	Dial gauge extension	VW 385/56		30 mm long
8	Gauge block plate	9281	000.721.928.10	
9	Dial gauge bracket	VW 387		
10	Clamping sleeve	9145	000.721.914.50	
11	Adjusting device	VW 521/4		
12	Measuring lever	VW 388		
13	Gauge plunger	VW 388		
14	Dial gauge extension	VW 382/10		6.0 mm long
15	Dial gauge extension	VW 385/15		9.3 mm long
16	Clamping tool*	9577	000.721.957.70	
17	Holder	9253	000.721.925.30	

Practical procedure when readjusting the drive set

If it is necessary to adjust drive pinion and ring gear, follow the below sequence to ensure an efficient working procedure:

1. Determine the total thickness of shims "Stot" (S_1 plus S_2) for the specified preload on the tapered roller bearings/differential.

2. Determine the thickness of shim "S_3".

3. Split the total shim thickness "Stot" into S_1 and S_2 so that the specified circumferential backlash is present between ring gear and drive pinion.

The aim of this adjustment is to restore the smoothest running position which has been achieved on test equipment in the production line.

To achieve correct results, greatest possible cleanliness for all assembly work and measuring procedures is essential.

When assembling the final drive assembly, it is only necessary to readjust drive pinion and ring gear or drive set if components have been replaced which have a direct influence on the adjustment. Refer to the following table to avoid unnecessary adjustment procedures.

Adjust: / Replaced component	Ring gear (S_1 + S_2)	Drive pinion (S_3)
Transmission case	x	x
Lateral transmission cover	x	
Large cylindrical roller bearing and four-point bearing for drive pinion	x	x
Drive set	x	x
Differential housing	x	
Tapered roller bearing for differential	x	

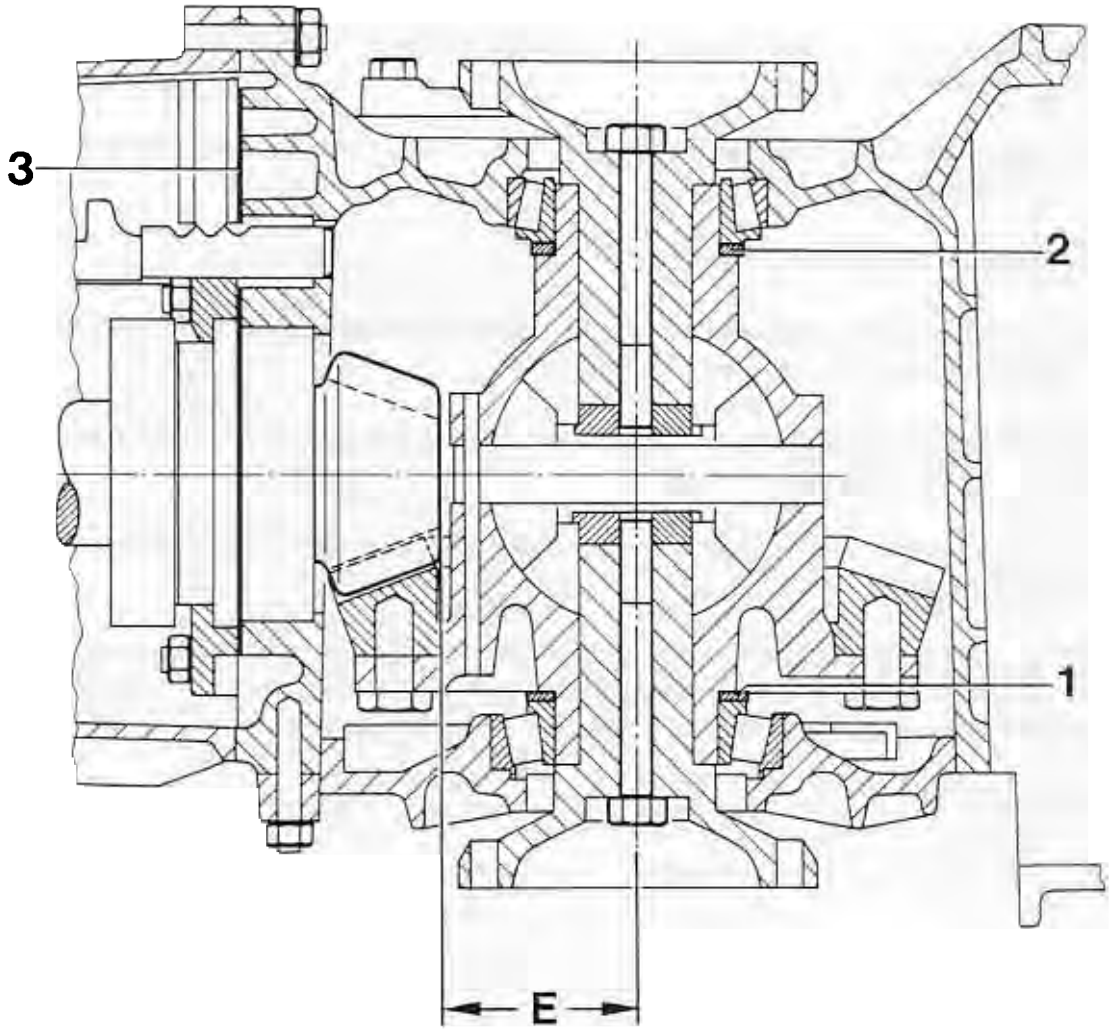

1 – Shim S_1
2 – Shim S_2
3 – Adjusting shim S_3
E – Setting value

Correct results may only be achieved if assembly work and measuring procedures are carried out carefully and with maximum cleanliness.

General

The setting of drive pinion and ring gear is a determining factor for the service life and smooth running of the rear-axle drive. Drive pinions and ring gears that have been checked for good tooth contact pattern and low noise in both directions of rotation on special test equipment are therefore matched during prodution. The position at which smoothest running can be achieved is determined by shifting the drive pinion axially, and embossed on the ring gear as setting value "E".

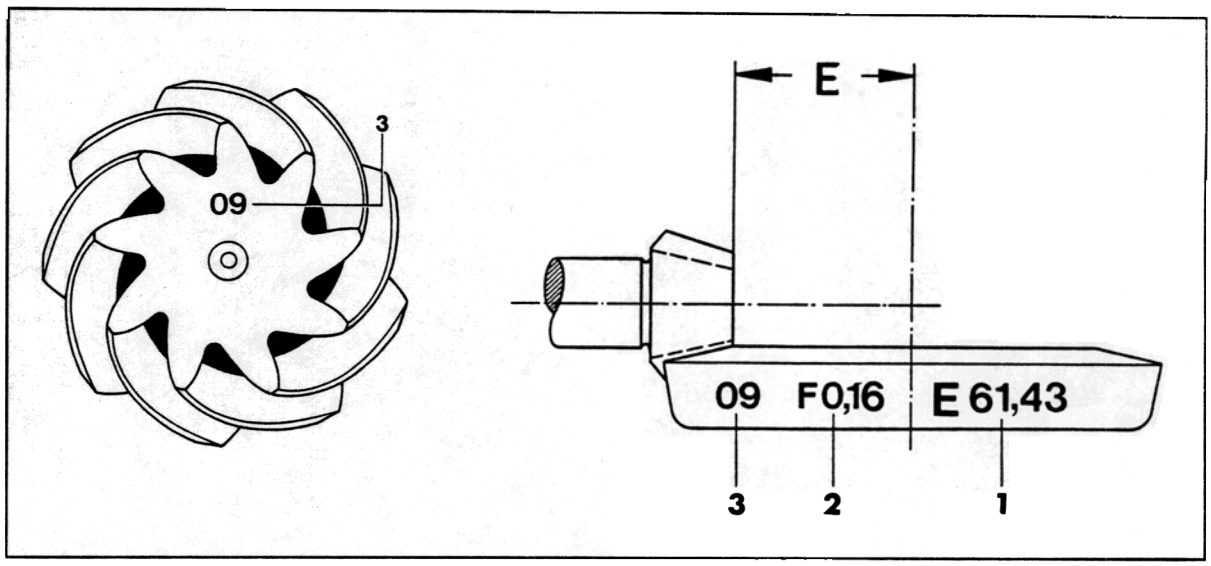

1 = setting "E" (e.g. 61.43 mm)
2 = circumferential backlash "F"
(e.g. 0.16 mm)
3 = matching number

39 08 15 Adjusting drive pinion

Note

The setting value "E" is indicated on the ring gear.

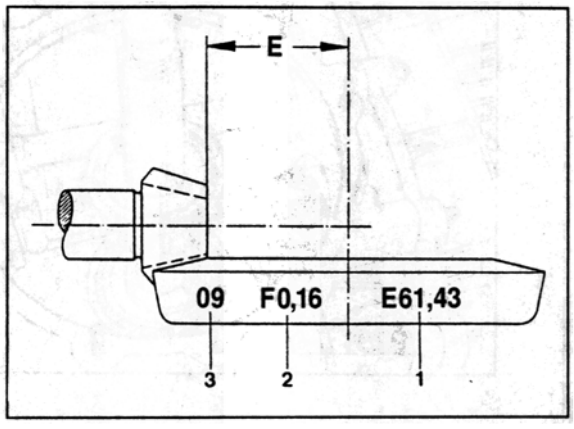

217-39

1 = Setting value "E"

1. Install complete gear set without "S_3" shims and tighten all tensioning plate hexagon-head nuts to **23 Nm** (17 ftlb.).

2. Fit gear housing and locate with three nuts.

3. Install and engage sixth gear.

4. Block input shaft with Special Tool **9253** and tighten drive pinion collar nut to **300 Nm** (221 ftlb.).

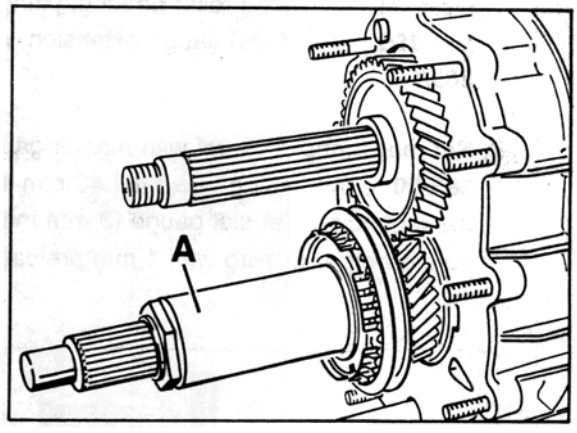

A = Suitable pipe section

5. Set adjusting ring of measuring mandrel **VW 385/1** to dimension "a".

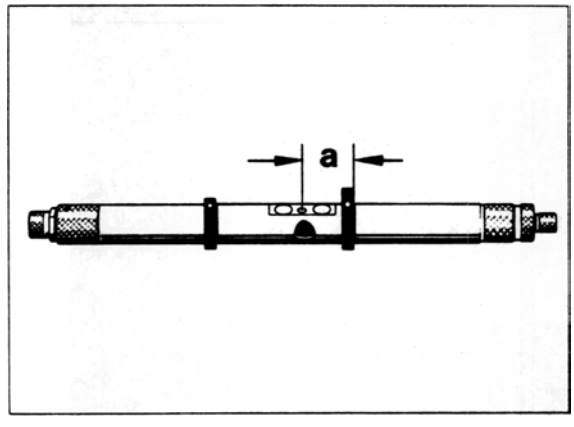

a = approx. 65 mm

6. Assemble measuring mandrel with centering disks **9109**, tapered roller bearing, plunger **VW 385 /14** and dial gauge extension **VW 385/15**.

7. Set measuring mandrel with master gauge **385/30** to the setting value (61.43 mm in the example). Set dial gauge (3 mm measuring range) to zero with 1 mm preload.

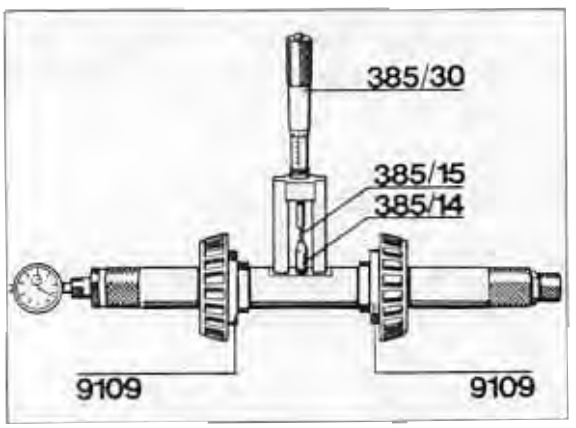

543-39

8. Put gauge block plate **9281** on drive pinion head and insert measuring mandrel into transmission case. Dial gauge extension is located in the area of the gauge block plate.

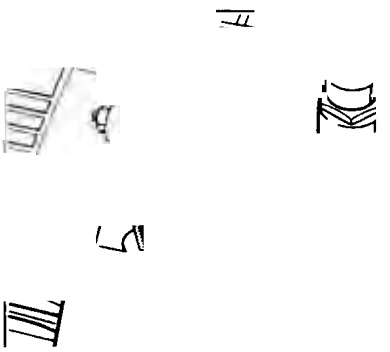

544-39

9. Fit lateral transmission cover without O-ring and tighten crosswise with 4 nuts.

Note

Do not use a hammer when fitting the lateral transmission cover (the gauge block plate held by magnets might fall off). Fit cover in installation position only by tightening the nuts uniformly.

10. Pull second centering disk with spindle towards the outside until the measuring mandrel can just be turned by hand.

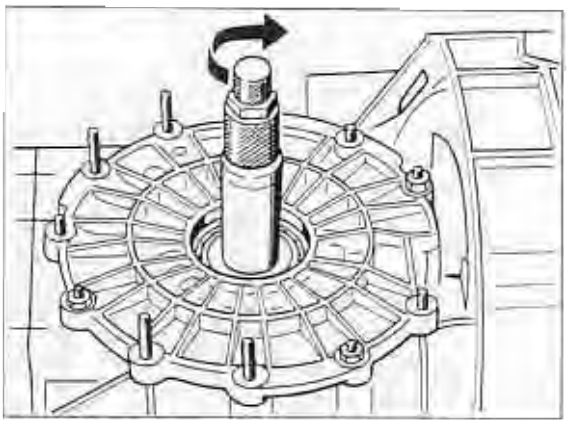

545-39

11. Turn measuring mandrel carefully until the dial gauge extension is vertical to the face of the drive pinion head. At this point, the pointer of the dial gauge reaches maximum deflection (reverse point) and the dial gauge must be read.

Note

The measured value always deviates from the set dimension clockwise (the smaller pointer on the dial gauge is between 1 and 2), i.e. if the dial gauge is set with a preload of 1 mm, the value deviating from 1 is taken as shim thickness "S_3".

Example:

If the small pointer on the dial gauge is between 1 and 2 and the large pointer indicates 0.37 mm, then 0.37 mm is the shim thickness (with 1mm gauge preload) to be inserted. Always round up or down to the nearest 0.05 mm (e.g. 0.37 mm to 0.35 mm).

12. After inserting the necessary shims, check the setting value "E" again. A deviation of ± 0.03 mm is permissible.

Printed in Germany - IX. 1994

Adjusting ring gear

Determine total shim thickness "S tot." ($S_1 + S_2$).

The ring gear must be adjusted, if the:

transmission case,
lateral transmission cover,
tapered roller bearing for differential,
differential housing or drive set
have been replaced.

Note

The drive pinion must be removed to determine the preload of the differential tapered roller bearings.

1. Make sure that the bearing outer races of the tapered roller bearings are well seated in the transmission case or lateral transmission cover, respectively.

2. Fit one spacer ring (2.5 mm thick) on the ring gear side and on the opposite side of the differential to be used.

3. Insert differential into transmission case and rotate several times.

4. Fit lateral transmission cover without seal and tighten all hexagon-head nuts to **23 Nm** (17 ftlb.).

5. Put gauge block plate **VW 385/17** on the collar of the differential.

6. Fasten universal dial gauge holder **VW 387** with dial gauge and extension to the case and set to 0 with 2 mm preload.

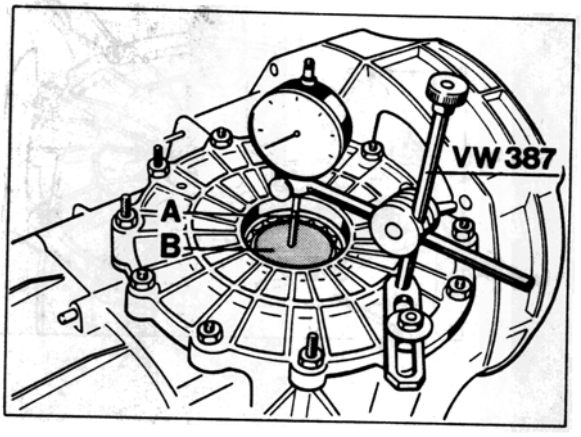

546-39

A = Dial gauge extension (approx. 30 to 40 mm long)
B = Gauge block plate VW 385/17

7. Move differential up and down. Read off backlash on the dial gaug and note.

Note

Do not turn differential while measuring backlash as this will give an incorrect reading.

8. Calculate "S tot.".
   "S tot." = Fitted shim thickness
   + Measured value
   + Pressure fit of tapered roller bearing

Example

Thickness of shims inserted	5.00 mm
Measured value	0.75 mm
Pressing (constant value)	0.40 mm
"S tot."	6.15 mm

9. Remove differential, pull off both tapered roller bearings and split calculated shim thickness "S tot." as follows.
   Selcect spacer S_1 0.70 mm thinner and S_2 0.70 mm thicker as a starting point for subsequent adjustment of the backlash.

Example

Total shim thickness of spacers
$S_1 + S_2 = 6.15$ mm

Thickness of spacer S_1

6.15 mm / 2	= 3.075 mm
	− 0.700 mm
	2.375 mm

Thickness of spacer S_2

6.15 mm / 2	= 3.075 mm
	+ 0.700 mm
	3.775 mm

Note

Spacers are available in thicknesses of 1.6 to 3.1 mm in increments of 0.10 mm.

By using a 0.25 mm shim, the shim thicknesses may be graduated in increments of 0.05 mm.

The calculated shim thicknesses must be rounded up or down for plausible dimensions that will not alter the total thickness S1 and S2.

Example:

Calculated thicknesses

$S_1 + S_2 = 2.375 + 3.775 = 6.15$ mm

Rounded thicknesses

$S_1 + S_2 = 2.35 + 3.80 = 6.15$ mm

Measure shims with a micrometer in several places. Permissible deviation 0.02 mm. Also check shims for burrs and damage.

Adjusting circumferential backlash

Note

The backlash to be set is embossed on the ring gear.

1. Mount gear set using shims "S_3" determined while adjusting the drive pinion.

Make sure that the collar nut of the drive pinion is tightened to **300 Nm** (221 ftlb.) before measuring backlash.

2. Insert differential with tapered roller bearing and shims (S_1 + S_2) into the housing.

3. Fit lateral transmission cover and tighten all hexagon-head nuts to **23 Nm** (17 ftlb.).

Always make sure that there is a certain amount of backlash when tightening the nuts. Never allow the drive pinion to seize.

4. Assemble measuring lever **VW 388** and adjusting device VW 521/4 and adjust lever length to 80 mm with the plunger. Refer to dimension "a" in the picture.

5. Insert adjusting device with clamping sleeve (Special Tool 9145) into the differential and clamp firmly.

6. Rotate differential in both directions several times to settle the tapered roller bearings.

7. Fit universal dial gauge holder with flat extension in such a way as to produce a right angle between dial gauge axis and lever.

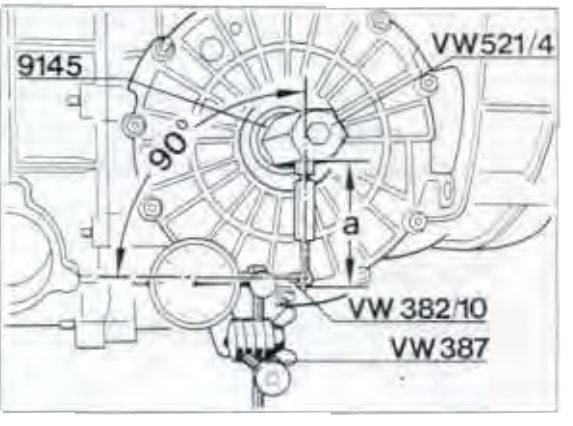

548-39

Dimension "a" = approx. 80 mm

8. Turn ring gear carefully at the clamping screw of the adjusting device as far as the stop and set the dial gauge to zero. Turn back ring gear and read off circumferential backlash. Note down the reading.

Note

When carrying out measurements, the drive pinion must be blocked with Special Tool 9562.

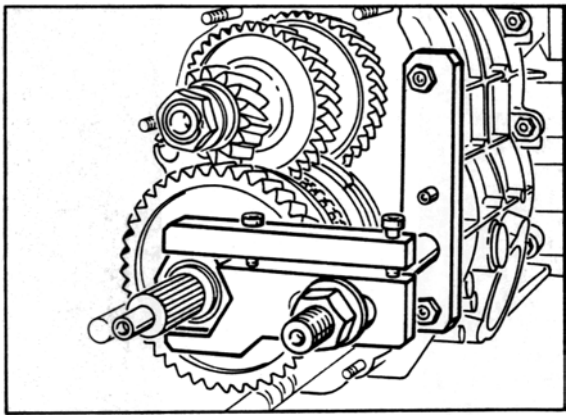

1710-39

9. After turning the ring gear a further 90°, repeat measuring procedures three times. The measured values must not deviate from one another by more than 0.03 mm.

Note

The backlash to be adjusted is embossed on the ring gear. A deviation of
± 0.03 mm is permissible

10. If the required backlash cannot be obtained, replace spacers (S_1 + S_2) again. The total shim thickness ("S tot.") must not be altered, however.

39 88 19 Removing and installing front-axle final drive

Removal

1. Remove front and center underside panel.

2. Unclip power steering lines from steering gear.

3. Separate drive shafts with Special Tool **9581** at transmission end.

4. Screw out mounting bolts of transmission mount, raise front axle final drive and take out mounts.

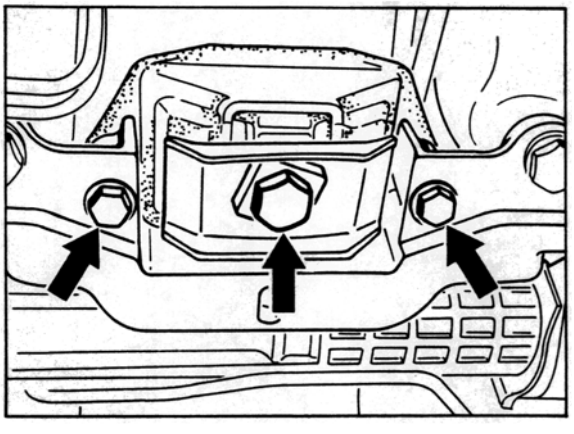

1963-39

5. Lift front-axle final drive and take out final drive mount.

6. **Screw out** mounting bolts "A" of side member and **slacken** bolts "B" only (by approx. 5 mm).

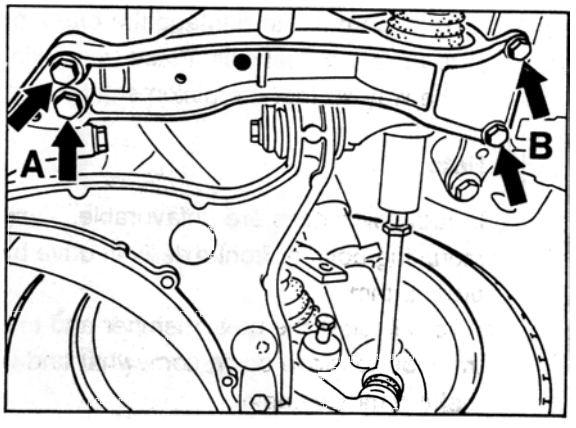

1964-39

A - Remove bolts
B - Slacken bolts only (approx. 5 mm)

7. Push stabilizer bar forward below fuel tank.

8. Screw out central tube to front axle final drive mounting bolts, pushing central tube to the left and right and locating tube with suitable wooden block. Take care not to damage the pipings.

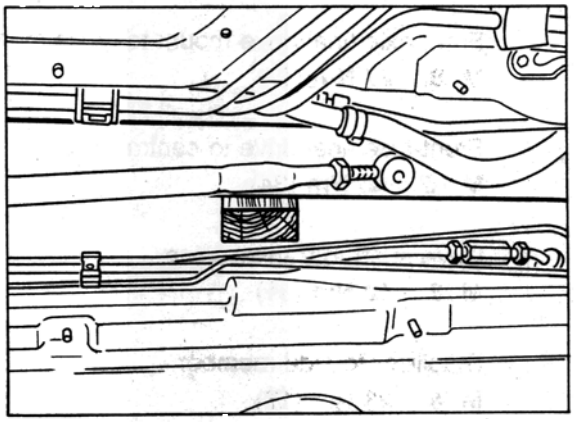

1965-39

9. Push front axle final drive out of splines and take out from below at an oblique angle. Take care not to damage the brake pipe at the spare wheel well. Place front axle out of the way so that the pinion shaft faces up.

Note

If body tolerances are unfavorable, slacken mounting bolts of front axle final drive by approx. 5 mm.
This will allow the crossmember and the central tube to move down somewhat and will make removal easier.

Installation

1. Check universal-joint shaft for true running (see page 40 - 103).

2. Check front-axle final drive oil and top up if required.

3. Measure front axle.

4. Tightening torques: (= ftlb)

Front-axle final drive mount to central tube
M 12 85 Nm (63)

Front-axle final drive mount to cross member
M 8 23 Nm (17)

Front-axle final drive to central tube
M 10 46 Nm (34)

Drive shaft to transmission
M 8 42 Nm (31)

Stabilizer to side member
M 8 23 Nm (17)

Stabilizer to stabilizer mount
M 10 46 Nm (34)

Side member to body / cross member
front / rear
M 12 90 Nm (66) / **M 10 46 Nm** (34)

cross member to body
outer / inner
M 12 105 Nm (77) / **M 10 48 Nm** (35)

39 59 19 Removing and installing oil seal of halfshaft flange (front axle final drive)

Note

The seals may also be replaced with the front axle final drive remaining installed.

Removal

1. Remove halfshaft flange by placing a chisel or spacer „A" below the halfshaft flange and turning bolt „B" to pull out halfshaft flange. In case the halfshaft flange is tilted, screw another bolt into the opposite hole.

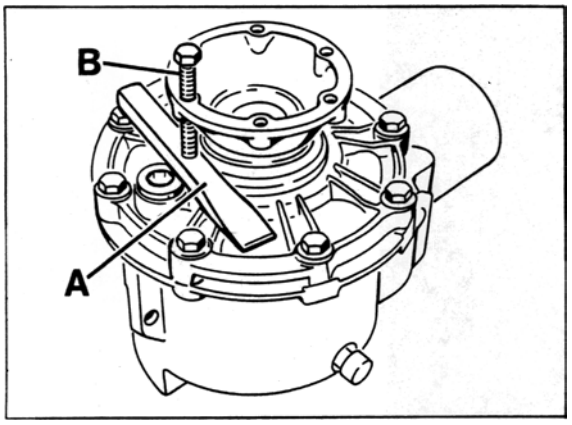

1993-39

2. Lever out seal with a suitable tool.

Installation

1. Pack space between dust and grease lips with grease (e.g. Liqui Moly Pu 53) and drive seal home to stop, using Special Tool **9537**.

2. The snap ring of the halfshaft flange must always be replaced. Use protetive jaws to mount flange in a vise and press out snap ring with a new snap ring „A".

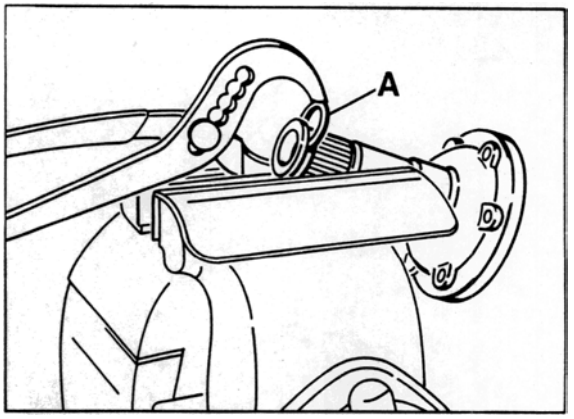

1994-39

A = New snap ring

3. Grease snap ring liberally and press in halfshaft flange with a suitable drift.

39 55 19 Removing and installing output shaft oil seal (Front axle final drive)

Removal

1. Remove front axle final drive (also refer to page 39 - 223).

2. Lever out seal with Special Tool **VW 681**.

Installation

1. Using Special Tool **9545**, press in seal to stop.

39 03 19 Removing and installing central tube

Removal

1. Remove centre console.

2. Remove underside panels.

3. Remove fit bolt for gearshift rod coupling.

4. Lift guide tube off ball joint.

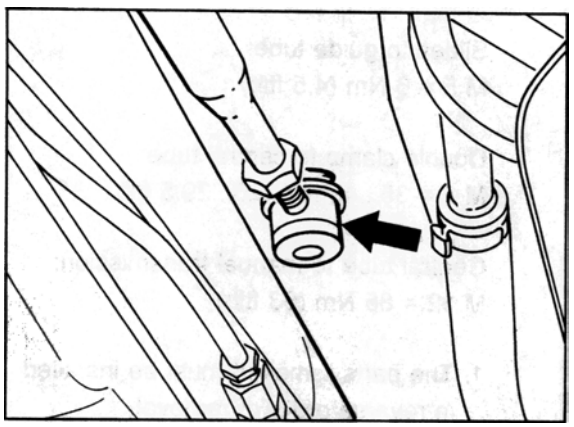

2238-39

5. Remove shift lever with gearshift rod and guide tube.

6. Remove front axle final drive.
(see page 39 - 225).

7. Completely unscrew the two mounting screws of the clamping sleeve and push it forwards on the central tube.

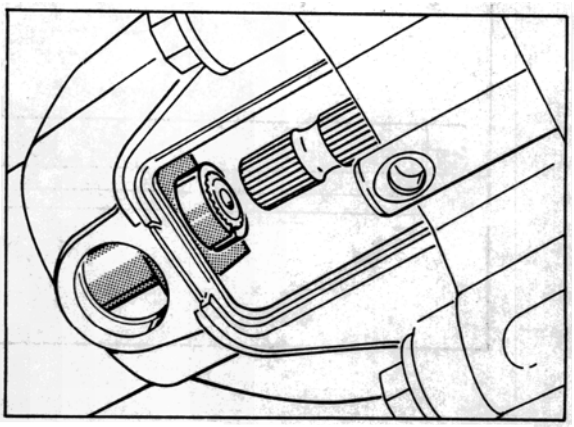

8. Apply flat steel parts (made in workshop) to support central tube.

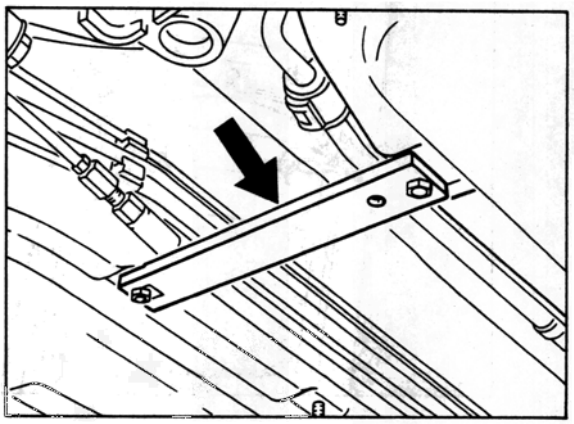

2022-10

Printed in Germany - 13. 1995

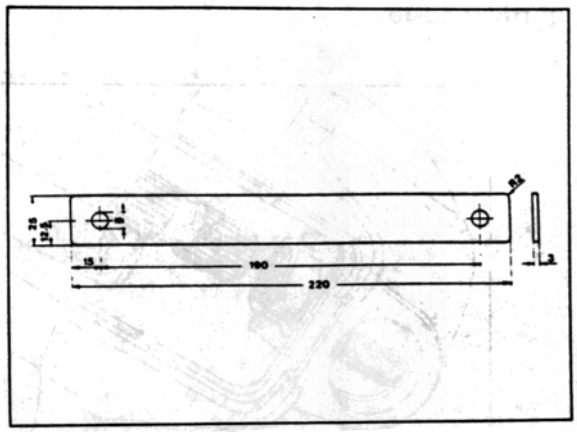

2029-10

9. Unscrew manual transmission mounting screws (the top two screws can be reached from the passenger compartment).

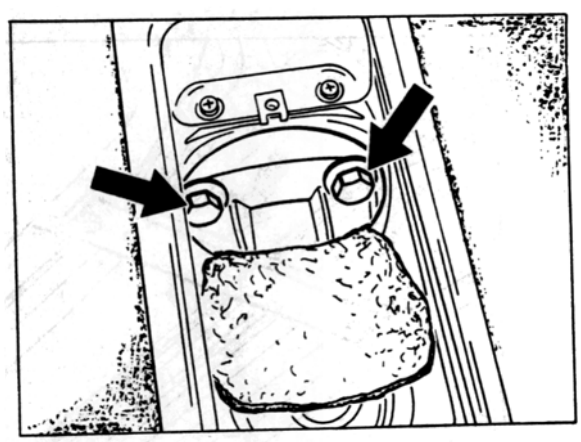

2025-10

Two persons are required for the removal of the central tube.

Installation

Torque specifications

Front axle final drive and suspension
(see page 39 - 226)

Frame to tunnel:
M 6 = 10 mm

Gearshift rod to transmission - internal shift rod:
M 8 = 23 Nm (17 ftlb)

Slides to guide tube:
M 5 = 6 Nm (4.5 ftlb)

Double clamp to central tube:
M 8 = 35...40 Nm (26...29.5 ftlb)

Central tube to manual transmission:
M 12 = 85 Nm (63 ftlb)

1. The parts removed must be installed in reverse order of removal.

2. Make sure that the centering pins on the transfer casing are properly positioned.

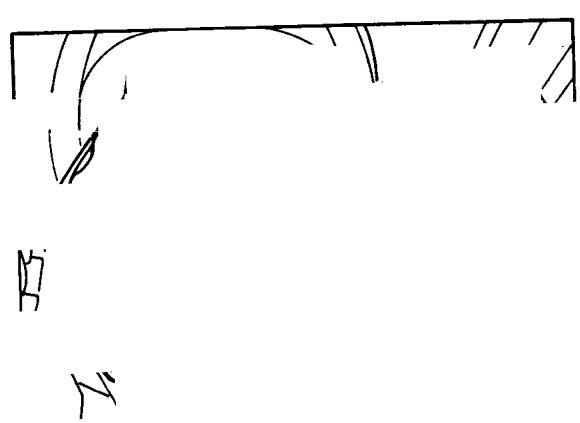

2240-39

3. Place insulation in correct position on tunnel.

4. Apply sliding compound (e.g. Contifix) to central tube in area of insulation and push central tube in carefully, making sure that the insulation is properly positioned.

5. Check adjustment of gearshift.
(see page 34 - 31).

Printed in Germany - 13, 1995

Repair Manual

911 Carrera
(993)

Volume III:
Transmission
Automatic

Dr. Ing. h.c. F. Porsche Aktiengesellschaft

Volume I:	**Overall vehicle – General**	**0**
General	Maintenance, diagnosis	03
Engine		
	Engine	**1**
	Engine – Crankcase, mounting	10
	Engine – Crankshaft, pistons	13
	Engine – Cylinder head, valve drive	15
	Engine – Lubrication	17
	Engine – Cooling	19
	Fuel, exhaust system, engine electrical system	**2**
	Fuel supply, control	20
	Exhaust system – Turbocharging	21
	Fuel system, electronic injection	24
	Fuel system, K-Jetronic	25
	Exhaust system	26
	Starter, power supply, GRA	27
	Ignition system	28
Volume II:	**Transmission**	**3**
Transmission	Clutch, control	30
Manual transmission	Manual transmission – Controls, case	34
	Manual transmission – Gears, shafts, inner operation	35
	Final drive, differential, differential lock	39
Volume III:	**Transmission**	**3**
Transmission	Automatic transmission – Torque converter	32
Automatic	Automatic transmission – Controls, case	37
transmission	Automatic transmission – Gears, control	38
	Final drive, differential, differential lock	39
Volume IV:	**Chassis**	**4**
Chassis	Front wheel suspension, drive shaft	40
	Rear wheel suspension, drive shaft	42
	Wheels, tires, alignment	44
	Anti-Lock System (ABS)	45
	Brakes – Mechanical	46
	Brakes – Hydraulics, regulator, booster	47
	Steering	48

Volume V:	**Body**	**5**
Body	Body front section	50
	Body center section, roof, frame	51
	Body rear section	53
	Hoods, lids	55
	Front doors, Central Locking System	57
	Exterior body equipment	**6**
	Sunroof	60
	Soft top, hardtop	61
	Bumpers	63
	Glasses, window control	64
	Exterior equipment	66
	Interior equipment, passenger protection	68
	Interior body equipment	**7**
	Trim, insulation	70
	Seat frames	72
	Seat upholstery, covers	74
Volume VI:	**Air conditioning**	**8**
Air conditioning	Heater	80
Vehicle electrics	Ventilation	85
	Air conditioning	87
	Auxiliary air conditioning system	88
	Electrical system	**9**
	Instruments, alarm	90
	Radio, telephone, on-board computer	91
	Windshield wipers and washer	92
	Exterior lights, lamps, switches	94
	Interior lights, lamps, switches	96
Volume VII:	**Electrical system**	**9**
Wiring diagrams	Wiring	97
Volume VIII:	**Diagnosis**	**D**
Diagnosis	Self-diagnosis	03
	DME Diagnosis	24
	Tiptronic Diagnosis	37
	PDAS Diagnosis	39
	ABS Diagnosis	45
	Airbag Diagnosis	68
	Heater Diagnosis	80
	Alarm Diagnosis	90

Preface

Structure

The "Technical Literture" for the "911 Carrera (993)" model is basically structured as before, i.e. the structure follows the familiar repair groups.

A new feature is that the structure includes the main groups **0 to 9** and the main group **D**.

Main groups:	0	Complete vehicle – General
	1	Engine
	2	Fuel, exhaust, engine electrical system
	3	Transmission
	4	Chassis
	5	Body
	6	Body equipment, outside
	7	Body equipment, interior
	8	Air conditioning
	9	Electrical system
	D	Diagnosis

Layout

The layout in the below items remains unchanged throughout the repair manual

1. Table of tightening torques
2. Special tools required
3. Exploded views
4. Legends for the exploded views
5. Assembly notes / use of special tools

As a new feature, however, the former item 6 (Repair group diagnosis) is no longer filed in the volume corresponding to the respective repair group. The **Diagnosis test plans / diagnosis procedures** have been combined in a **separate Diagnosis volume** broken down according to the main groups 0 to 9.

Another new feature is that the contents of the "Service Information Technik" are indicated in the Repair Manual. This brochure concentrates on a description of the design and function of components and of the new features introduced for a particular model year.

Service Number

All major repair procedures and repair descriptions are identified by a two- or four-digit **Service Number** completed by two additional digits to identify the work that corresponds to the first six digits of the working position number in the Working Times and Damage Catalog.

Example: 30 37 37 Dismantling and assembling clutch control shaft

Explanation: **30** **37** **37** 50 (full working position number)

Repair group
here: Clutch, control

Component designation
here: Clutch control shaft

Activity
here: Dismantling and assembling

Index
here: Removed

Presentation in the various documents

30 37 37 50	Working position no. from **Working Times and Damage Catalog**, consisting of repair group, component designation, activity and index
30 37 37	Six-digit number in **Repair Manual**, consisting of repair group, component designation and activity
	Service number in **Service Information**, consisting of repair group and component designation

Goal

The introduction of a service number in the "technical literature" is intended to facilitate standardization and positive identification to allow direct cross-referencing among the various documents. This is of particular importance with regard to the use of electronic media.

Survey of contents of Service Information Technik '95

The Service Information gives a detailed description of the technical features of the new 911 Carrera.

	Rep. Gr.	Page
Engine		
General		1 - 1
Engine cross-sections	10	1 - 4
Full-load curve		1 - 6
Belt pulley	13	1 - 8
Pistons	13	1 - 10
Hydraulic valve lash adjuster	15	1 - 16
Setting the timing	15	1 - 18
USA - auxiliary air pump		1 - 19
Fuel and ignition systems		
General		2 - 1
DME - Schematic	24	2 - 2
Fuel - air flow	24	2 - 3
Exhaust gas flow	26	2 - 5
DME control unit 2.10.1	24	2 - 9
Mass air flow sensor	24	2 - 12
Throttle potentiometer	24	2 - 18
Ignition system	28	2 - 24
Plausibility test		2 - 28
Diagnosis		2 - 29
Auxiliary air pump	26	2 - 33
Power transmission		
Transmission	30	3 - 1
Clutch	30	3 - 2
Manual transmission	34	3 - 3
Transmission ratios		3 - 6
Gear set	35	3 - 8
Synchromesh	35	3 - 9
Final drive	39	3 - 13
Oil supply		3 - 15
Porsche Tiptronic	37	3 - 16
Modifications for the '95 model year		3 - 17

	Rep. Gr.	Page
Running gear		
General		4 - 1
Front axle	40	4 - 2
Steering	48	4 - 7
Rear axle	42	4 - 8
Elasto-kinematic toe correction	42	4 - 12
Coil springs (layout)	42	4 - 13
Wheels, tires	44	4 - 15
Suspension alignment	44	4 - 17
Brakes	47	4 - 20
Bleeding the brakes	47	4 - 23
ABS 5	45	4 - 24
Operation of the ABD	45	4 - 30
Diagnosis ABS/ABD	45	4 - 34
Body		
General		5 - 1
Constructional dimensions	50	5 - 4
Aerodynamics and air ducting	50	5 - 8
Body equipment		
Body equipment		6 - 1
Color scheme as of 1995 model year	60	6 - 1
Windows	64	6 - 8
Airbag system	68	6 - 14
Body - interior trim		
Body - interior trim	70	7 - 1
Seats	72	7 - 5
Heating, air conditioning, ventilation		
Particle filter	85	8 - 1
Air ducting	80	8 - 3
Heating - air conditioning unit	85	8 - 5
Heating - air conditioning unit	87	8 - 6
Series resistor of rear blower	80	8 - 9

Electrical system

	Rep. Gr	Page
Instruments	90	9 - 1
Alarm system/central locking system	90	9 - 3
Heated rear window	64	9 - 6
Central Information System (Z I)	91	9 - 7
Radio "Alpine 7807"	91	9 - 10
Sound package, DSP-System	91	
Windshield wiper and washer system	92	
Headlights	94	
Front end light cluster	94	
Tail lights	94	
Engine compartment baseplate	97	
Wiring diagram		

Summary

Maintenance	0 - 1
Number ranges	0 - 4
Technical data	0 - 5

III Transmission Automatic Transmission

3 Transmission

3	Technical Data .	3 - 101
32	**Clutch, autom. torque converter**	
32 50 19	Removing and installing the torque converter . .	32 - 101
32 47 19	Removing and installing torque converter seal ring	32 - 103
37	**Automatic transmission - Controls, case**	
37 02 01	Checking the ATF fluid level	37 - 101
37 02 55	Changing ATF fluid and cleaning the ATF strainer	37 - 103
37 31 19	Removing and installing multifunctional switch on transmission	37 - 105
37 15 15	Adjusting cable for selector device	37 - 107
37 15 19	Removing and installing cable for selector mechanism	37 - 109
37 10 19	Removing and installing gear selecting system	37 - 113
37 10 37	Dismantling and assembling gear selecting system	37 - 115
37 87 19	Removing and installing lift solenoid for shiftlock	37 - 119
37 13 19	Removing and installing keylock bowden cable	37 - 121
37 13 01	Checking keylock and shiftlock	37 - 123
37 48 19	Removing and installing the intermediate plate	37 - 125
37 48 37	Dismantling and assembling intermediate plate^	37 - 129
38	**Automatic transmission - Gears, control**	
38 60 29	Flushing ATF cooler and lines	38 - 101
38 60 19	Removing and installing ATF cooler	38 - 103
38 17 19	Removing and installing the hydraulic control unit	38 - 109
38 90 19	Removing and installing kickdown switch	38 - 110a
38 18 19	Removing and installing the wiring harness for the transmission	38 - 111
38 77 19	Dismantling and assembling transmission	38 - 113
38 89 20	Removing and installing solenoid valves	38 - 119
38 56 19	Removing and installing the ATF pump	38 - 123
38 10 05	Determining the end clearance	38 - 125
38 91 05	Adjusting the preload of the spur gear taper roller bearings . . .	38 - 127
38 74 37	Disassembling and assembling the parking lock	38 - 129

Printed in Germany - 13, 1995

39 Final drive, differential, differential lock

39 25 37	Disassembling and assembling the long joint flange	39 - 101
39 25 19	Removing and installing long halfshaft flange	39 - 104a
39 26 19	Removing and installing short halfshaft flange	39 - 104c
39 22 19	Removing and installing the rotary shaft seal for the short joint flange	39 - 105
39 28 19	Removing and installing drive pinion seal rings	39 - 107
39 01 19	Removing and installing rear transmission case	39 - 109
39 09 19	Removing and installing differential and drive pinion	39 - 113
39 09 37	Dismantling and assembling differential	39 - 119
39 30 19	Dismantling and assembling drive pinion	39 - 123
39 08 15	Adjusting drive set	39 - 127

Printed in Germany - 13. 1995

3 Technical Data

4-speed Tiptronic transmission A50

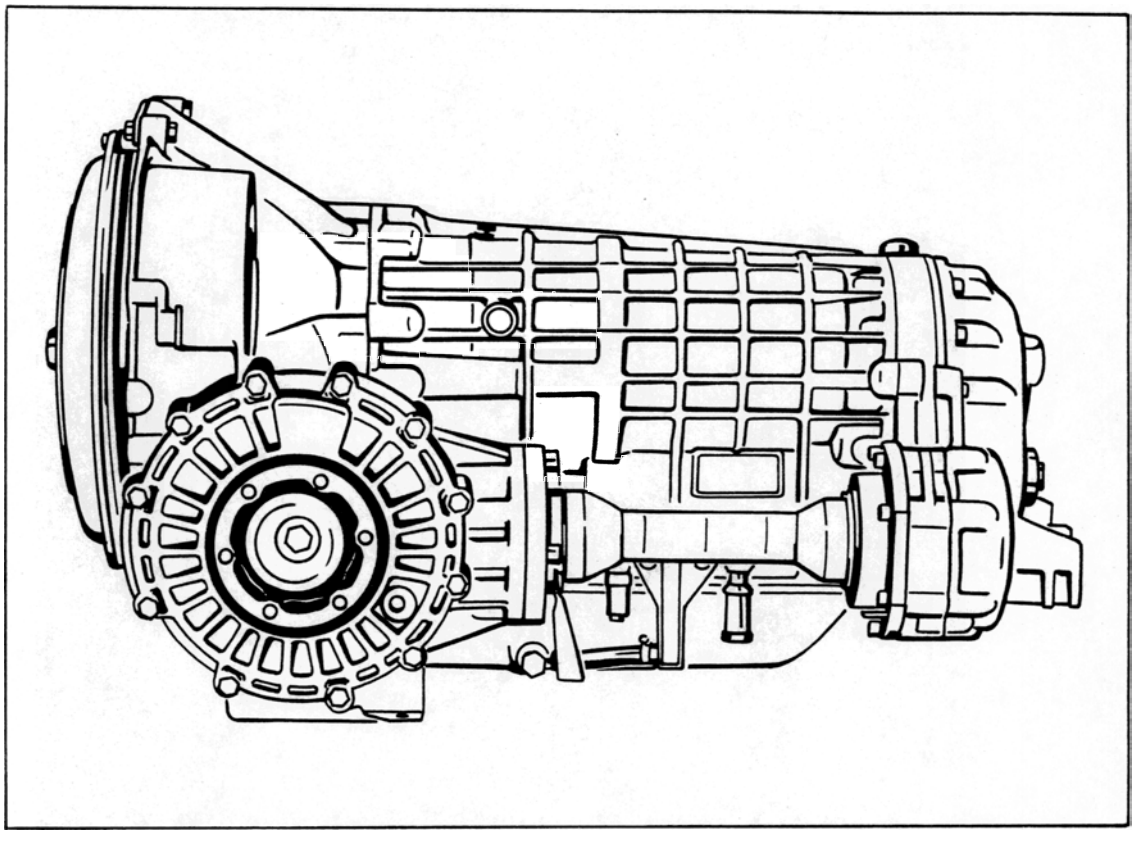

Type	Code letter	Version	Installed in	Model year
A 50/04		4-speed	911 Carrera worldwide except USA and Taiwan	'94 / '95
A 50/05		4-speed	911 Carrera USA, Taiwan	'94 / '95

3 Technical Data

General data	A50/04	A50/05
Type	fully automatic 4-speed planetary transmission (Tiptronic)	
Gear ratios		
spur gear	1.100	1.100
1st gear	2.479	2.479
2nd gear	1.479	1.479
3rd gear	1.000	1.000
4th gear	0.728	0.728
reverse	2.086	2.086
final drive	hypoid bevel gear with 15 mm offset	
final drive ratio	9:33 = 3.667	9 : 32 = 3.556
stall speed	2300 - 400	2300 - 400
oil volume for final drive	approx. 0.9 l multi-grade transmission oil 75 W 90 API specification GL5 (**MIL-L 2105 B**), or SAE 90	
oil volume for automatic transmission with torque converter	total volume approx. 9.5 l oil change approx. 3.5 l ATF-Dexron II D	

3 Technical Data

Torque specifications for Tiptronic transmission

Location	Thread	Tightening Torque Nm (ftlb.)
Multifunctional switch to transmission	M 6 x 25	10 (7)
Selector lever to selector shaft	M 8 x 1	15 (11)
Long halfshaft flange to transmission housing	M 8	23 (17)
Short halfshaft flange to differential	M 10 x 60	46 (34)
Plug to rear transmission housing	M 22 x 1.5	50 (37)
Rear transmission housing to automatic transmission	M 10	46 (34)
Front transmission cover to intermediate plate	M 10 x 35 M 8	46 (34) 23 (17)
Intermediate plate to automatic transmission	M 8	23 (17)
Drive pinion bearing assembly to front transmission cover	M 8	23 (17)
Fastening nut to helical gear	M 40 x 1.5	250 (184)
Guide part for parking lock to housing	M 6 x 20	10 (7)
Plug to ATF pan	M 14 x 1.5	40 (30)
Banjo bolt to ATF pan	M 12 x 1.5	40 (30)
Banjo bolt to housing	M 14 x 1.5	40 (30)
ATF pan to housing	M 6	6 (4)

Location	Thread	Tightening torque Nm (ftlb.)
ATF strainer to hydraulic control unit	M 6 x 65	
Plug to ATF quick-fill adapter	M 14 x 1.5	30 (22)
Hydraulic control unit to transmission	M 6	
Hexagon nut for transmission socket		12 (9)
ATF indicator tube to transmission	M 6 x 4	
Adapter of hydraulic control unit to transmission housing	M 6	
Pressure regulator and solenoid valve mount to control unit	M 6	
Solenoid valves to hydraulic control unit	M 5 x 12	
ATF pump to housing	M 6	
Oil drainage and filling plug	M 22 x 1.5	50 (37)
Side transmission cover to housing	M 8 x 35	23 (17)
Bearing cover to bearing assembly	M 6 x 15	
Drive pinion bearing assembly to housing	M 10 x 35	50 (37)
Plug for ATF ducts	M 14 x 1.5	25 (18)
Fastening nut to bearing assembly	M 36 x 1.5	250 (184)
Crown wheel to differential housing	M 10 x 1.25	85 (63), and Loctite 262

3 Technical Data

Torque specifications for transmission suspension

Location	Thread	Tightening torque Nm (ftlb.)
Transmission support to body	M 10 x 70	46 (34)
Transmission support to transmission (fastening nut)	M 12 x 1.5	85 (63)
Side member to transmission	M 12 x 1.5 x 65	85 (63)
Side member to transmission support (fastening nut)	M 10	30 (22)
Console to transmission	M 8 x 35	23 (17)

Torque specifications for ATF lines and cooler

Location	Thread	Tightening torque Nm (ftlb.)
Bracket to headlight holder	M 6	10 (7)
Console to wheel house	M 8	23 (17)
Tension strut to console	M 6	10 (7)
Bar to ATF cooler	M 6	10 (7)
ATF cooler to engine oil cooler	M 6	10 (7)
Horn holder to wheel house	M 6	10 (7)
ATF lines to transmission (union nut)	M 18	30 (22)
Joints on ATF lines (union nuts)	M 18	30 (22)

3 Technical data

Torque specifications for gear selecting system

Locaion	Thread	Tightening torque Nm (ftlb.)
Lock nut to clevis of selector lever cable	M 5	6 (4)
Selector lever mount to body	M 6 x 16	10 (7)
Holder for selector lever cable to transmission	M 8	23 (17)
Cable slide housing to switch plate (Keylock)	M 4	2.5 (2)
Keylock cable to ignition lock	M 10 x 1	2.5 (2)
Shiftlock to selector lever housing	M 5	6.5 (5)
Lift solenoid to Shiftlock housing	M 4	2.5 (2)

Removing and installing the torque converter

Removing

1. Remove transmission.

2. Remove converter, with transmission in horizontal position.

Note

Do not damage converter bearing assembly and rotary shaft seal.

Installing

1. Carefully insert converter, with transmission in horizontal position. Turn the converter to and fro until the gear toothing engages and the installation position is reached.

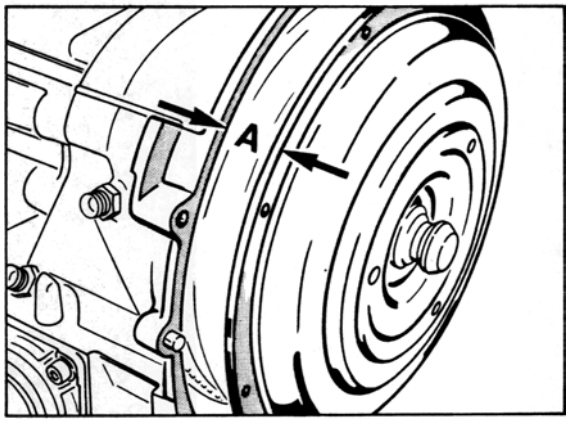

412-32

A = approx. 25 mm

Note

If the torque converter is not installed in the correct position, both the torque converter and the ATF pump may be damaged when the engine is connected to the transmission.

2. Secure converter against falling out with special tool **9325**

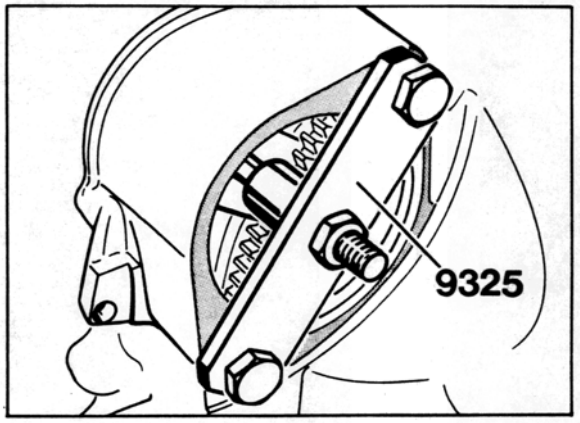

413-32

Printed in Germany – V, 1994

32 47 19 Removing and installing torque converter seal ring

Removing

1. Remove transmission and converter.

2. Lever out sealing ring with **VW 681**

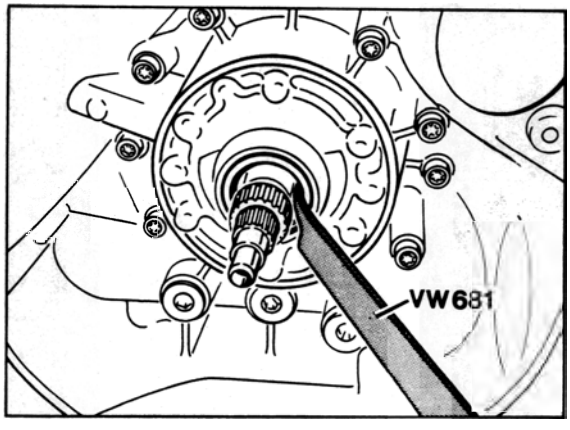

419-38

Installing

Installation takes place in reverse order.

1. Wet sealing lip with ATF.

2. Press in sealing ring with special tool **9328** as far as it will go.

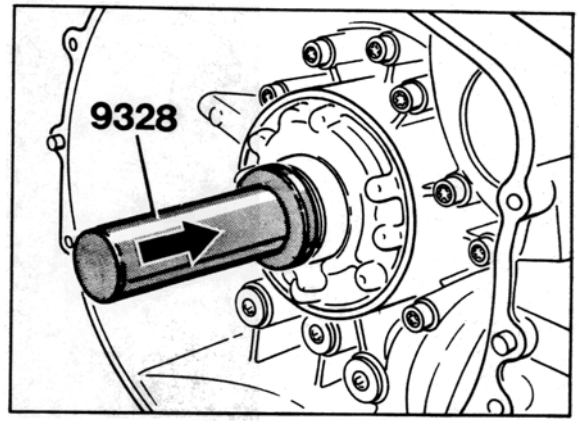

420-38

Printed in Germany – V, 1994

Test point	DTC	Title	Fault effect	Page
31	70	Fault in torque converter clutch	Torque converter clutch always open	37 - 85

Note
Diagnosis of the torque converter clutch is active as from the **1997** model.

Fault, fault code	Possible causes, elimination, notes
Test point 31 **Torque converter fault** Fault code 70	Torque converter clutch always open **Fault possibility: mechanical/hydraulic fault in transmission** 1) Check ATF level and correct if necessary (refer to 911 Carrera (993) Workshop Manual, Page 37 - 101). 2) Erase fault memory and perform a test drive. The diagnostic test conditions are achieved if: - the torque converter clutch is electrically closed - engine speed < 3008 rpm - engine torque > 200 Nm (148 ftlb) - ATF-temperature between 40° C and 95° C 3) Read out fault memory again. The following areas have to be checked if the fault is still present: - ATF supply - torque converter - hydraulic control unit (jammed spool valves) - transmission (slipping clutches)

Checking the ATF fluid level

The prescribed fluid level is extremely important for perfect functioning of the automatic transmission.

Preconditions for checking:

Transmission underbody cladding removed

Vehicle must be horizontal

Engine operating at idling speed

Hand brake applied

Selector lever in position "P"

ATF temperature 80°C

Check ATF level at 80°C.

Note

The ATF capacity was increased by 0.5 l. The ATF level therefore rises and the 80°C check marks move further up on the oil level tube. Refer to imaginary and dotted lines in the close-up insert.
When checking the ATF level, make sure the fluid level is between those two lines (maximum level **15 mm above** the **80°C MAX mark** present, lowest level approx. **3 mm below** the **80°C MAX mark** present).

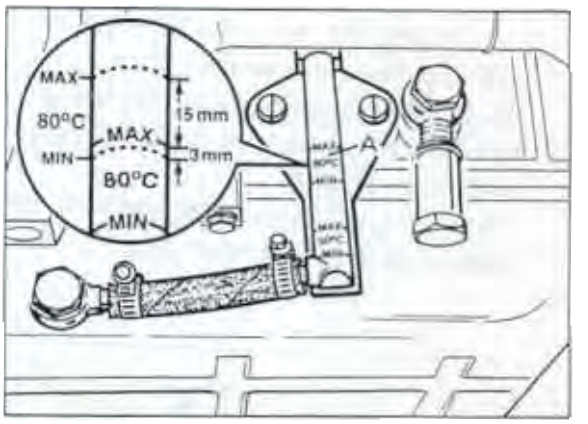

1958-38

A = invalid 80°C mark

The exact ATF temeprature can be determined with the system tester 9288.

If necessary, top up missing ATF fluid via the quick-fill device (also refer to page 37-103).

Printed in Germany - 12, 1995

Modifications from model year '95

Since model year '95, a new oil level tube with **50°C** markings has been fitted.
The ATF fluid level should be checked using the same procedure as before but at an ATF temperature of **50°C**.
The liquid level must be within the 50°C indication range (see B in illustration).

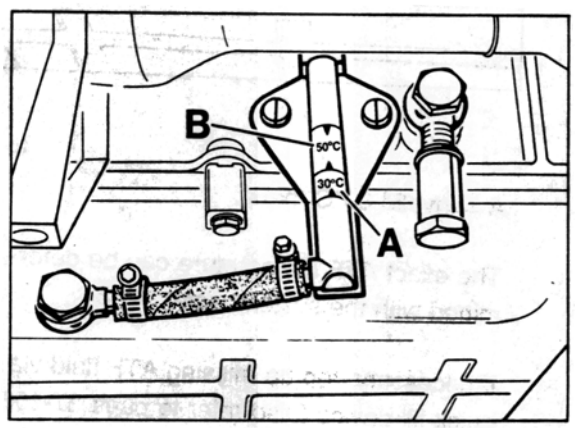

2036-38

A = indication range for 30°C ATF temperature
B = indication range for 50°C ATF temperature

37 02 55 Changing ATF fluid

Capacity: approx. 9.5 l
Change quantity: approx. 3.5

Oil type:
ATF-Dexron IID

The ATF fluid must be changed and the ATF strainer cleaned every 40,000 km

When changing the ATF fluid, the vehicle must be horizontal and the engine switched off.

Drain ATF fluid, remove ATF pan and ATF strainer (refer to page 38-113).

Thoroughly clean the strainer and pan.

Fit the ATF strainer with a new O-ring. Tighten the fixing screws with **8 Nm (6 ftlb)**.

Fit the ATF pan with seal. Tighten the fixing screws with **8 Nm (6 ftlb)**.

Fill with ATF fluid:

First, fill ATF fluid up to the 30°C max. mark via the quick-fill connection with the engine stationary.

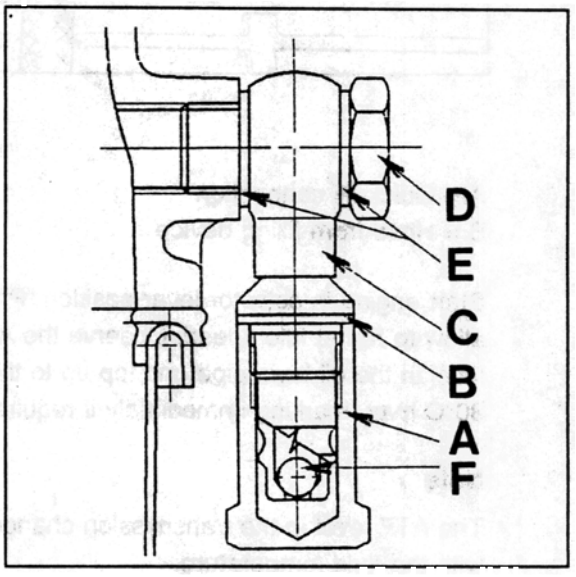

391-38

A = Hexagon cap nut (tightening torque 30 Nm = 22 ftlb)
B = Sealing ring (replace)
C = Quick-fill connection

Printed in Germany - 12, 1995

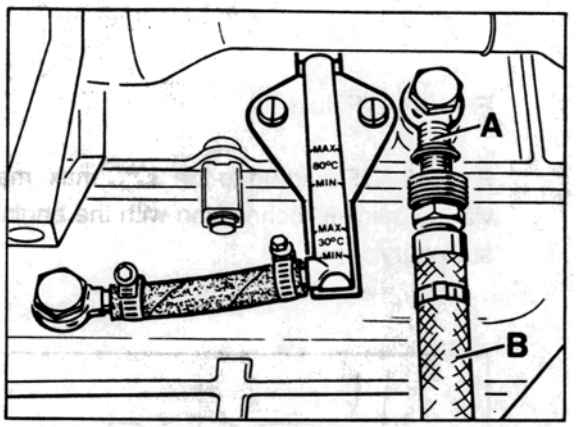

388-38

A = Quick-fill connection
B = Hose from filling device

Start engine in selector lever position "P" and allow to run at idle speed. Observe the ATF level in the oil level pipe and top up to the 30°C max. marking immediately if required.

Note

The ATF level in the transmission changes with the fluid temperature.

Drive the transmission warm and check the ATF fluid at 80° C (from mod. '95 at 50° C).
See note on page 37 - 101.

The exact ATF temperature can be determined with the system tester 9288.

37 31 19 Removing and installing multifunctional switch on transmission

Removal

1. Set selector lever to position "N".
2. Remove transmission undertray.
3. Remove rear underside panel.
4. Remove left rear hot air pipe.
5. Disconnect selector lever cable from actuating lever.
6. Remove actuating lever.

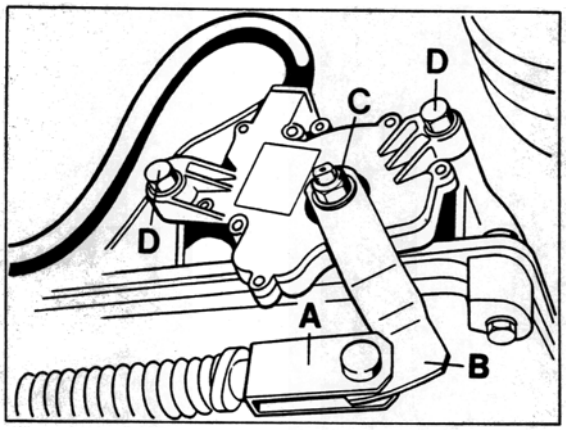

381-37a

A = selector lever cable
B = actuating lever
C = hexagon nut (M 8 x 1) with washer
D = fastening screws

7. Press retaining lugs for wire retainer "A" together and lift holder out upwards.
8. Detach, unlock and disconnect connector.

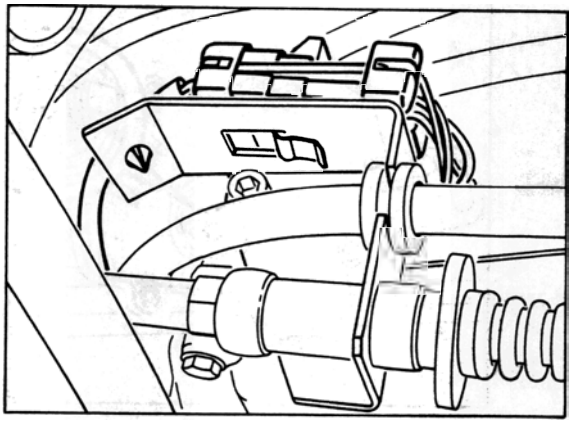

1881-37

A = wire retainer

9. Unscrew fastening screws for multifunctional switch completely and remove switch.

Installation

For installation, proceed in reverse order.

Tightening torques:

Multi-functional switch to transmission	= 10 Nm
Actuating lever to selector shaft	= 15 Nm

1. Set selector shaft to position "N" (turn shaft anti-clockwise up to the stop and then back two clicks) and place switch in the correct position.

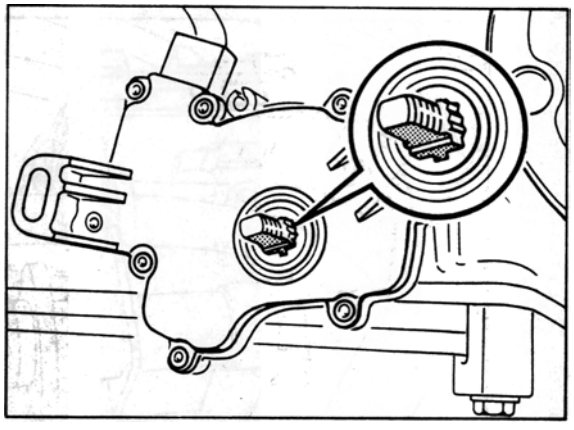

1884-37

2. Adjusting multifunctional switch.

   Push pointer of special tool **9326** onto the selector shaft and turn the switch until the locating pin can be pushed into the fixing hole of the switch. Tighten the mounting screws to **10 Nm** (7 ftlb.) in this position.

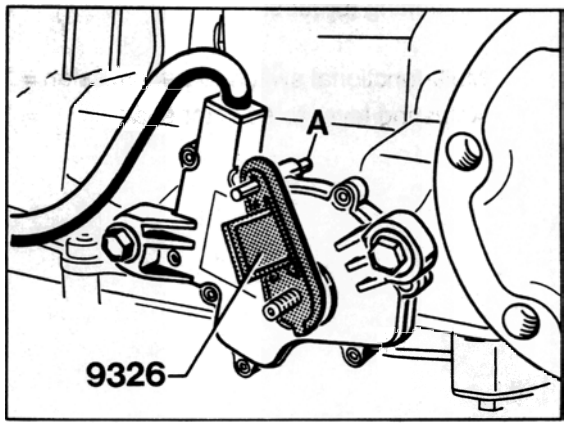

A = locating pin

2. Check, and if necessary adjust, setting of selector lever cable.

37 15 15 Adjsuting cable for selector device

1. Move selector lever to position "P".

2. Set multi-function switch to position "P". To do so, press actuator lever of switch back up to stop.

3. Set cable length at clevis so that the bolt can be installed free from stress.

4. Check adjustment by shifting through all the gears and confirming that gear is displayed on speedometer. In addition change gate from "D" to "M". This must be possible with one shmooth, straightline movement.

5. Mount snap ring for bolt on actuator lever.

Printed in Germany - 12, 1995

37 15 19 Removing Installing cable for selector mechanism

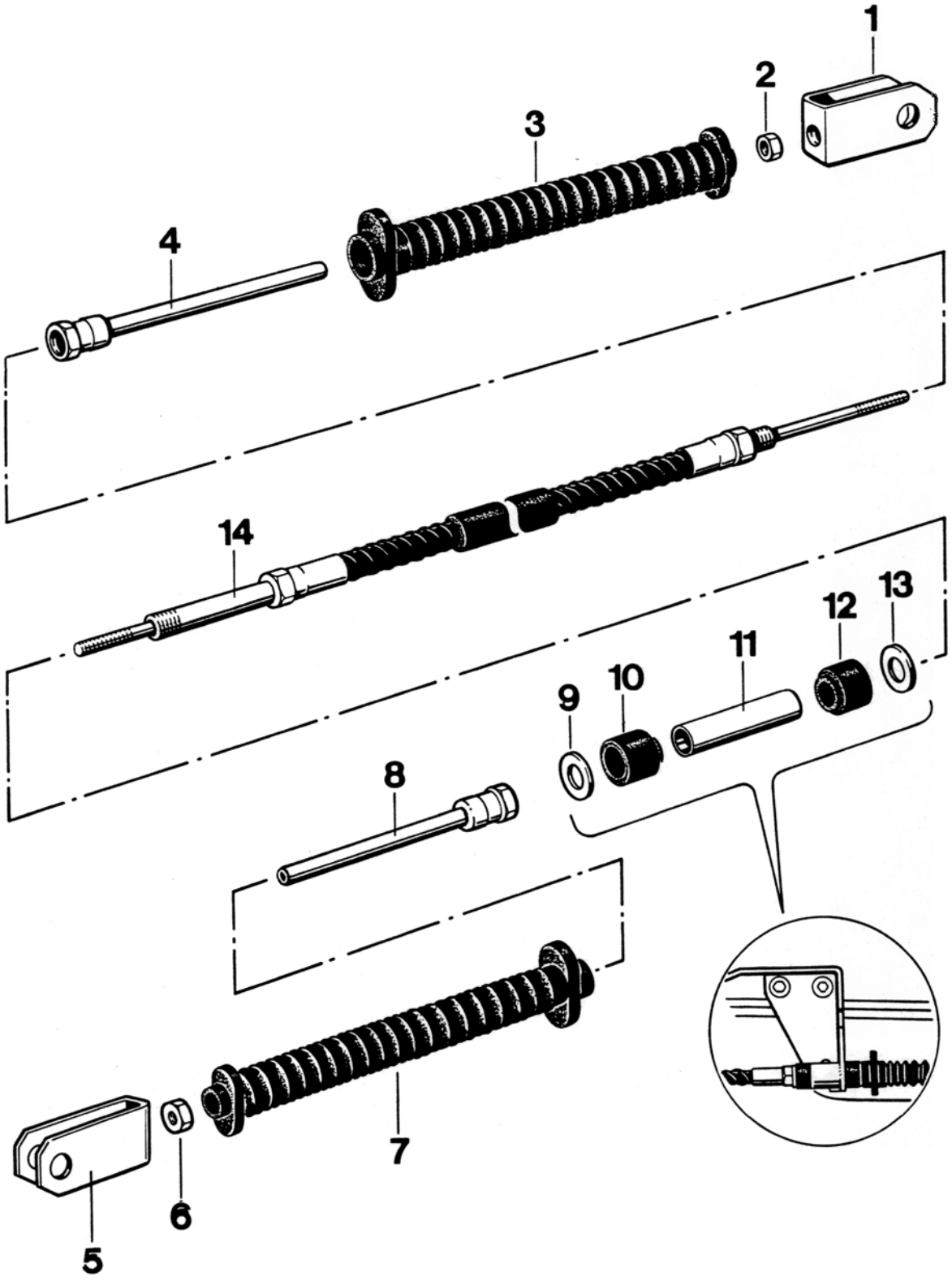

No.	Designation	Qty.	Note: Removal	Installation
1	Fork head	1		Screw on tol half length of thread on cable
2	Hexagon nut	1		Tighten to 5 Nm (4.4 ftlb)
3	Galter seal	1		
4	Guide tube	1		
5	Fork head	1		
6	Hexagon nut	1		Tighten to 6 Nm (4.4 ftlb)
7	Gaiter seal	1		
8	Guide tube	1		
9	Washer	1		
10	Rubber mount	1		Install in correct position
11	Spacer tube	1		
12	Rubber mount	1		Install in correct position
13	Washer	1		
14	Cable	1		Readjusrt

Printed in Germany – V, 1994

Instructions for removal and installation

Removal

1. Remove transmission undertray and underside panel.

2. Disconnect cable on operating lever and remove fork head.

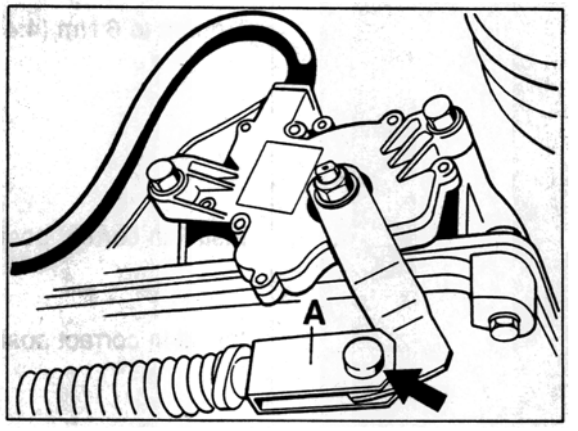

381-37

A = Fork head

3. Disconnect guide tube on bracket.

4. Disconnect cable on selector lever casing and disconnect guide tube.

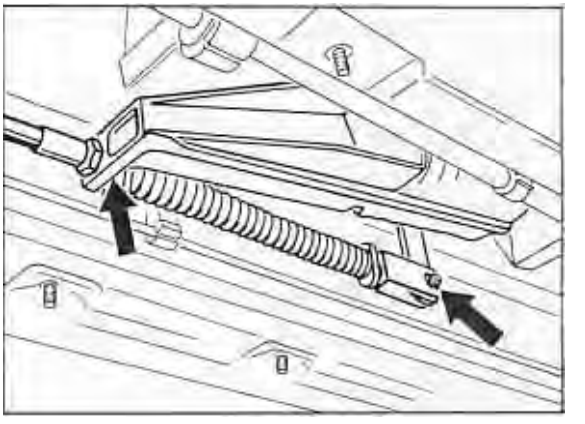

1066-37

Installation

1. Installation is carried out in reserve order.

2. Adjust calbe for selector mechanism (see page 37 - 107).

Printed in Germany – V, 1994

37 10 19 Removing and installing gear selecting system

1. Disconnect battery.

2. Remove center underside panel

3. Disengage selector lever cable from deflection lever and undo guide tube.

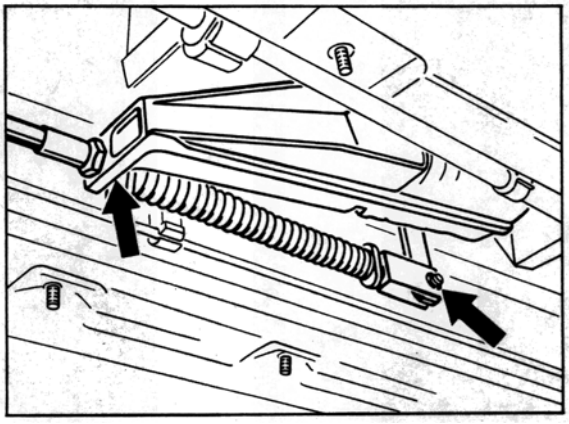

1066-37

4. Unscrew release button and pull off selector knob.

5. Remove center console.

6. Disconnect cable valve body from switch plate (only for keylock models).

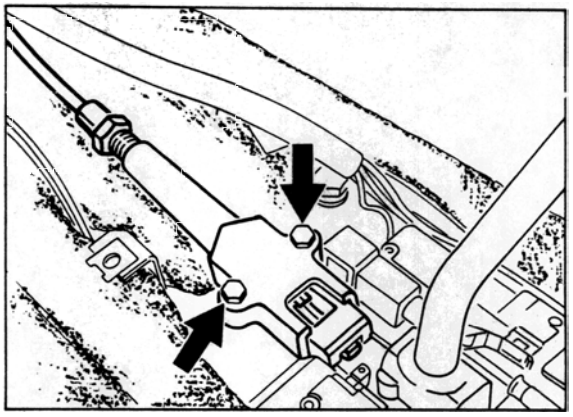

1067-37

7. Disconnect connectors for switch plate.

8. Unscrew four mounting screws (M 6) and take out selector lever operator from above.

Installation

Tigtening torques:

Gear selecting system to body = 10 Nm (7 ftlb)

Cable valve body to switch plate = 2.5 Nm (2 ftlb)

1. Install in reverse order.

2. Press selector knob manually until is up against the stop, making sure the twist lock engages in the cutout in the selector lever.

3. Check release button for smooth operation. It must return into the home position by itself.

4. Check selector lever cable adjustment and readjust if required.

5. Check operation of keylock and shiftlock

Printed in Germany – V, 1994

37 10 37 Dismantling and assembling gear selecting system

Tools

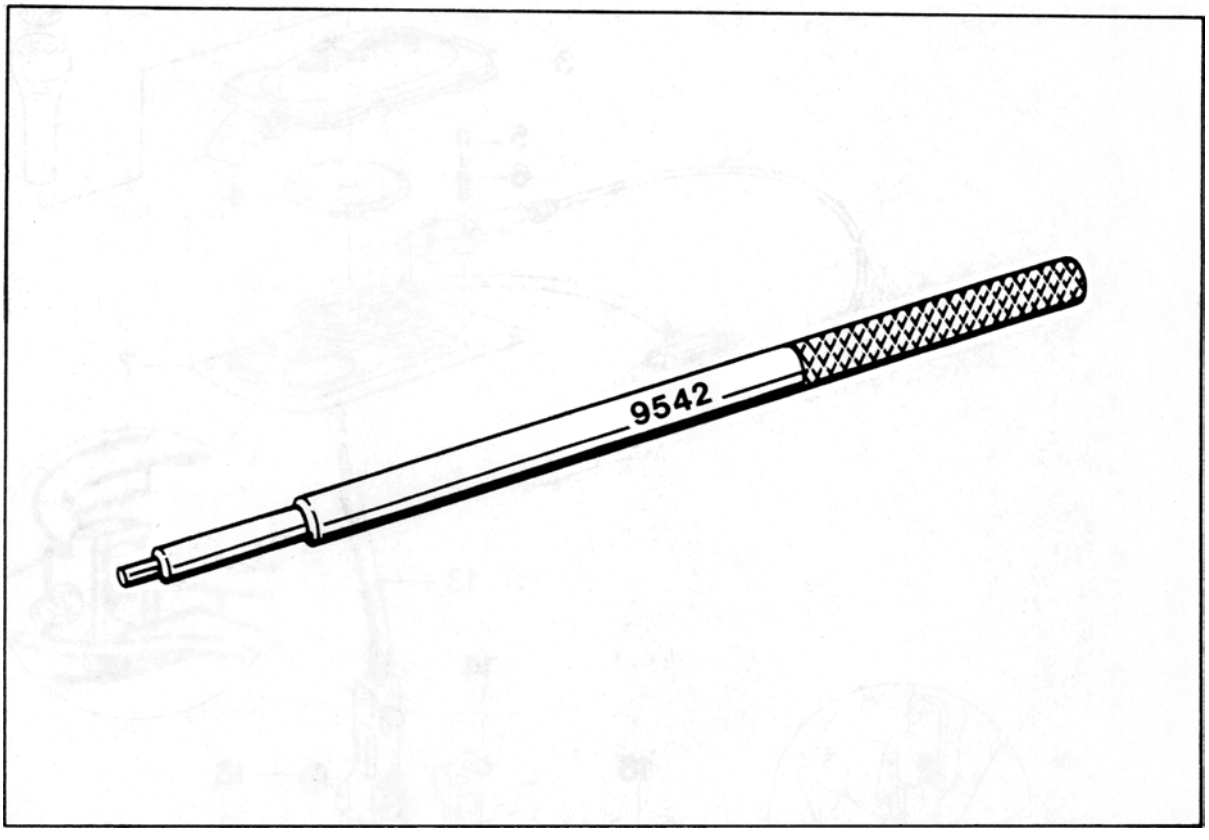

No.	Designation	Special tool	Order number	Explanation
	Assembly mandrel	9542	000.721.954.20	

Printed in Germany – V, 1994

37 10 37 Dismantling and assembling gear selecting system

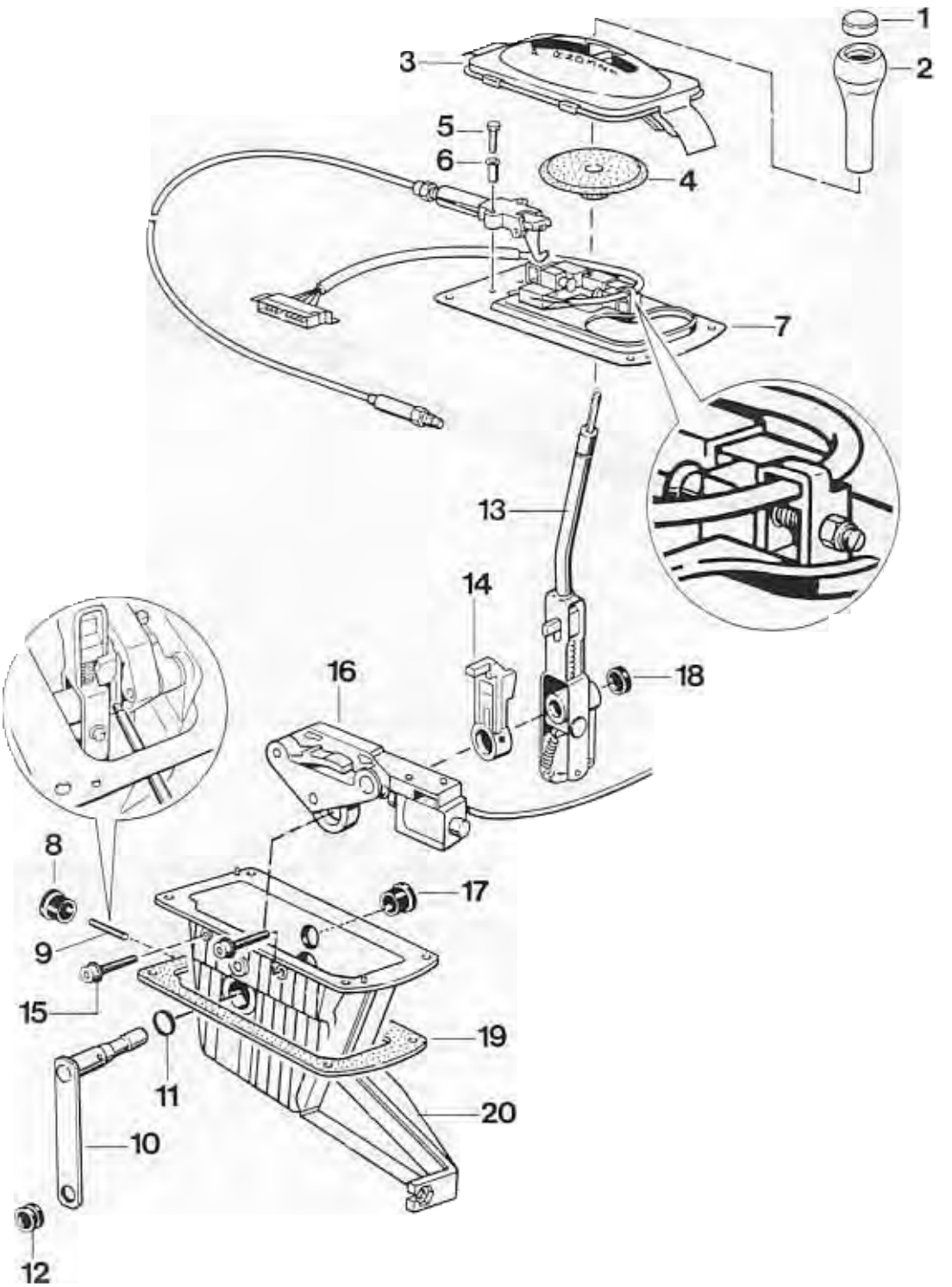

Printed in Germany – V, 1994

No.	Designation	Qty.	Note: Removal	Installation
1	Release button	1	Screw off manually	Must return to home position automatically after it has been actuated
2	Selector knob	1	Pull off manually	Push up to stop in correct position. Twist lock must engage in cutout in selector lever
3	Shroud	1	Can only be removed from below with the center console removed	
4	Cover	1		
5	Hexagon head screw	2		Tighten to 2.5 Nm (2 ftlb)
6	Sleeve	2		
7	Switch plate	1		
8	Plug	1		
9	Tensioning sleeve	1	Drive out using Special Tool 9542	Bore of driver and relay shaft must match
10	Deflection lever	1		
11	Seal	1		
12	Rubber mount	1		
13	Selector lever	1	Shift into manual speed selection gate	
14	Driver	1		
15	Hex socket head bolt	2		Tighten to 6.5 Nm
16	Shift-Lock	1		
17	Plug	1		
18	Cover	1		
19	Gasket	1		
20	Housing	1		

Note

Coat all sliding surfaces with low-temperature grease (e.g. Shell S 6508)

Printed in Germany – V, 1994

Notes on assembly:

Note

Change from "D" to "M" and from "M" to "D". Stright-line movement without catching must be possible. In addition, there may be up to 0.4 mm play on the selector lever in the + and – direction with "M" selected. Adjustments can be made using the selector lever reset switch (see exploded drawing, item 7).

37 87 19 Removing and installing solenoid for shiftlock

Note

When checking the solenoid electrically, be sure to observe correct polarity
Terminal 1 = Positive
Terminal 2 = Negative

Removal

1. Remove center console and gear selecting system.

2. Remove switch plate.

3. Using a suitable tool, press connecting rod carefully off the solenoid.

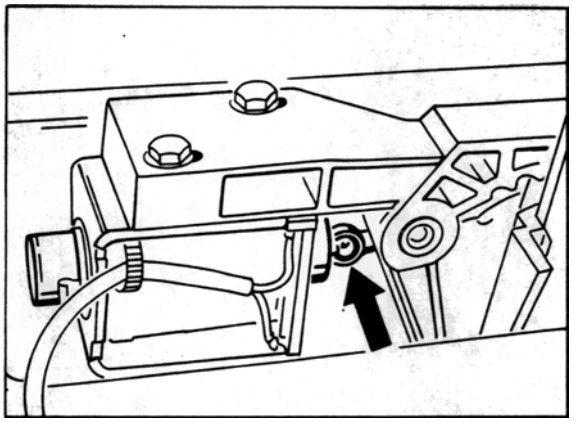

4. Screw out mounting screws and take off solenoid.

Installation

1. Set selector lever to "1" position.
2. Grease ball and ball socket with low-temperature grease.

3. Clip connecting rod to solenoid, retaining the connecting rod in correct position using a suitable wire hook or marking tool and pushing the free lift solenoid carefully into the ball socket.

4. Using sleeves and hexagon head bolts, fit solenoid to gate in such a manner that it remains free to slide in an axial direction.

5. Adjusting the solenoid:

   Set selector lever to position „P".

   Slide lift solenoid all the way back in the slots of the gate.

   Push iron core from the solenoid towards the pawl until it contacts the stop and locate it in this position.

   Slide the actuated solenoid axially until the idler contacts the stop of the pawl.

   Tighten hexagon head bolt to 2.5 Nm (2 ftlb) in this position.

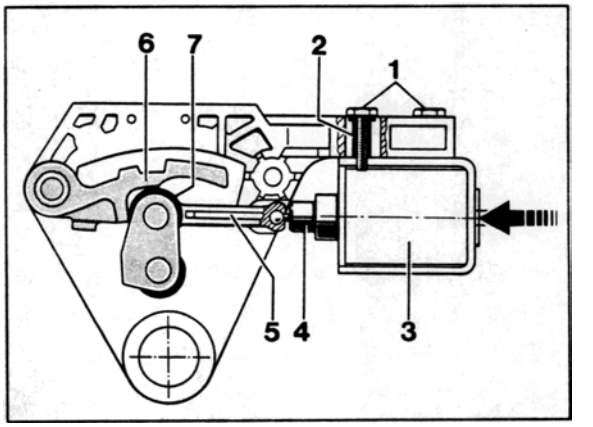

1 - Hexagon head bolt
2 - Sleeve
3 - Solenoid
4 - Iron core
5 - Connecting rod
6 - Pawl
7 - Idler

6. Check operation of shiftlock.

Printed in Germany – V, 1994

37 13 19 Removing and installing keylock bowden cable

Removal

1. Disconnect battery
2. Remove complete center console, knee guard and side nozzle.
3. Undo Central Information System and leave it supended on the wiring.
4. Turn ignition lock to position „2" (Ignition on).

Note

The ignition lock must be in position „2". If it is left in any other position, both the lock and the bowden cable may be damaged.

5. Unbolt bowden cable from ignition lock.

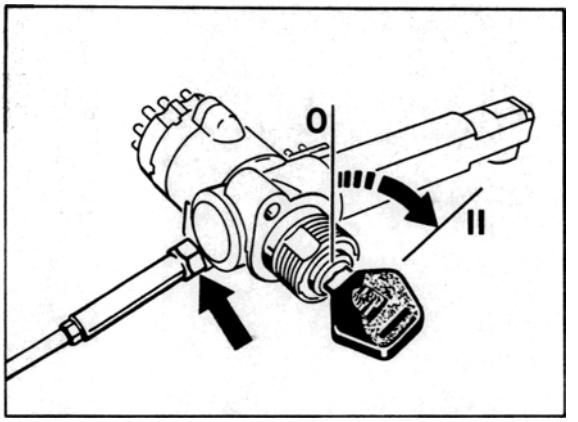

1068-37

6. Undo mounting screws of valve body.

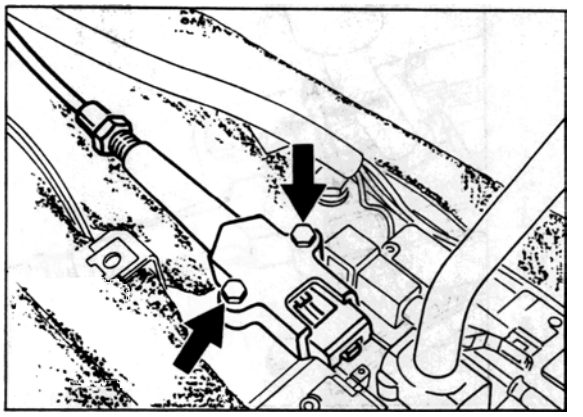

1067-37

7. Disengage bowden cable from pedal floorboard and from bracket for center console.

Installation

1. Assemble in reverse order, observing the following points.
2. Turn ignition lock to position „2" (Ignition on) and fit bowden cable to ignition lock.
   Tightening torque: 2.5 Nm (2 ftlb)
3. Fit bowden cable valve body using sleeves and hexagon head bolts.
   Tightening torque: 2.5 Nm (2 ftlb)
4. Set selector lever to position „P" and turn ignition lock to position „0".

Note

If the ignition lock cannot be turned to the 0 position, the bowden cable must be re-adjusted.

Printed in Germany – V, 1994

5. Adjust bowden cable, turning the cable sleeve on the valve body until the lock slide reaches a setting of 2 + 0.5 mm (refer to Fig.).

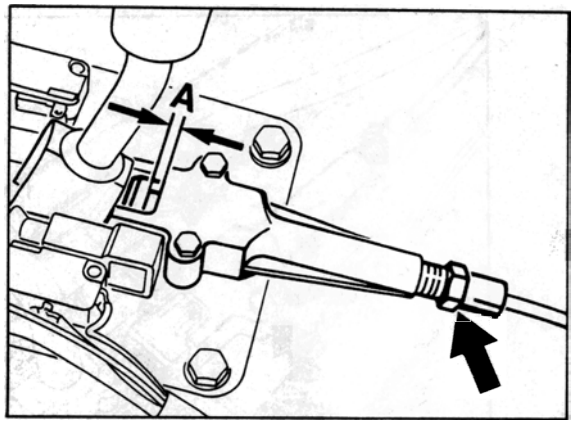

1081-37

A = 2 + 0.5 mm

6. Check operation of keylock and shiftlock.

37 13 01 Checking keylock and shiftlock

Checking the keylock (ignition key lock)

Selector lever position	Position of release button	Keylock operation	Ignition key
P	not actuated	no	rotary, may be pulled off
P	actuated	yes	cannot be turned to pulloff position
R-N-D-3-2-1	not actuated actuated	yes	cannot be turned to pulloff position

Checking the keylock (selector lever lock)

Ignition key position	Release button status	Keylock operation	Selector lever
Pulled off or pulled position	locked	yes	locked
Position 1 or 2	not locked	no	not locked

Checking the shiftlock

Selector lever position	Ignition	Shiftlock operation	Brakes	Selector lever
P-R-N-D-3-2-1	off	no	actuated not actuated	not locked
P and N	on	yes	not actuated	locked
P and N	on	yes	actuated	not locked

Printed in Germany – V, 1994

37 48 19 Removing and installing the intermediate plate

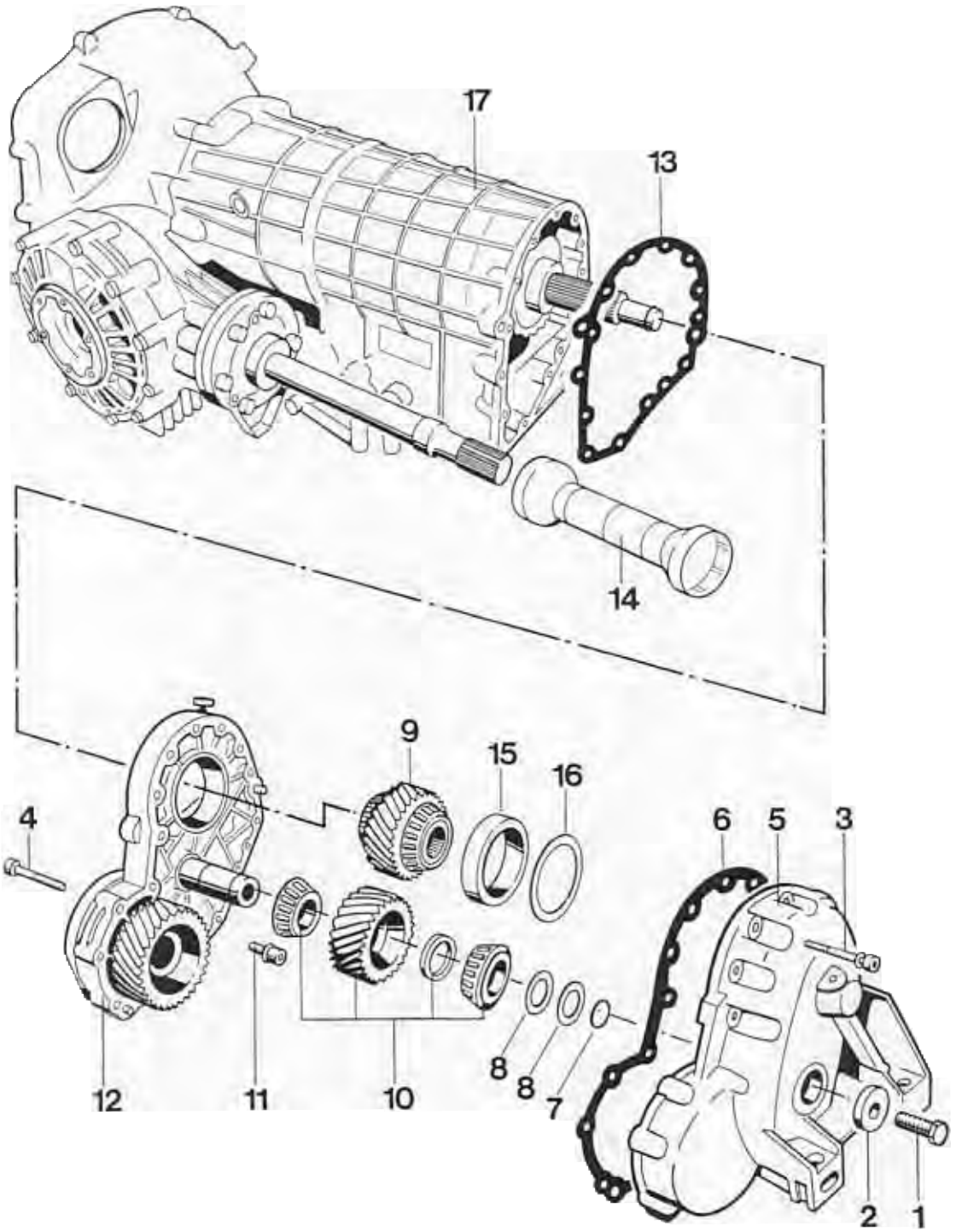

No. No.	Designation	Qty.	Note: Removal	Installation
1	Hexagon screws	1		Tighten with 46 Nm
2	Washer	1		
3	Fillister head screw	11		Tighten with 23 Nm
4	Fillister head screw	6		Tighten with 23 Nm
5	Front transmission cover	1		
6	Seal	1		Replace
7	O-ring	1		Replace, oil with ATF
8	Shim	X	Note thickness for re-installation	
9	Gear wheel with tapered-roller bearings	1		
10	Gear wheel with bearing assembly	1		Set by the manufacturer.
11	Fillister head screw	2		Tighten with 23 Nm
12	Intermediate plate	1		
13	Seal	1		Replace
14	Protective tube	1		Large diameter to final drive
15	Taper roller bearing outer race	1	Remove with internal puller (e.g. Schrem 60 - 70)	Heat transmission cover to approx. 120 deg. C and press in to stop
16	Adjusting shim	X	Record thickness for reinstallation	
17	Automatic transmission with final drive	1		

Note

The reduction gear is only available as a complete set (intermediate plate, transmission cover and adjusted spur gears). It is not necessary to adjust the tension on the tapered roller bearing.

Printed in Germany - 12, 1995

37 48 37 Dismantling and assembling intermediate plate

Tools

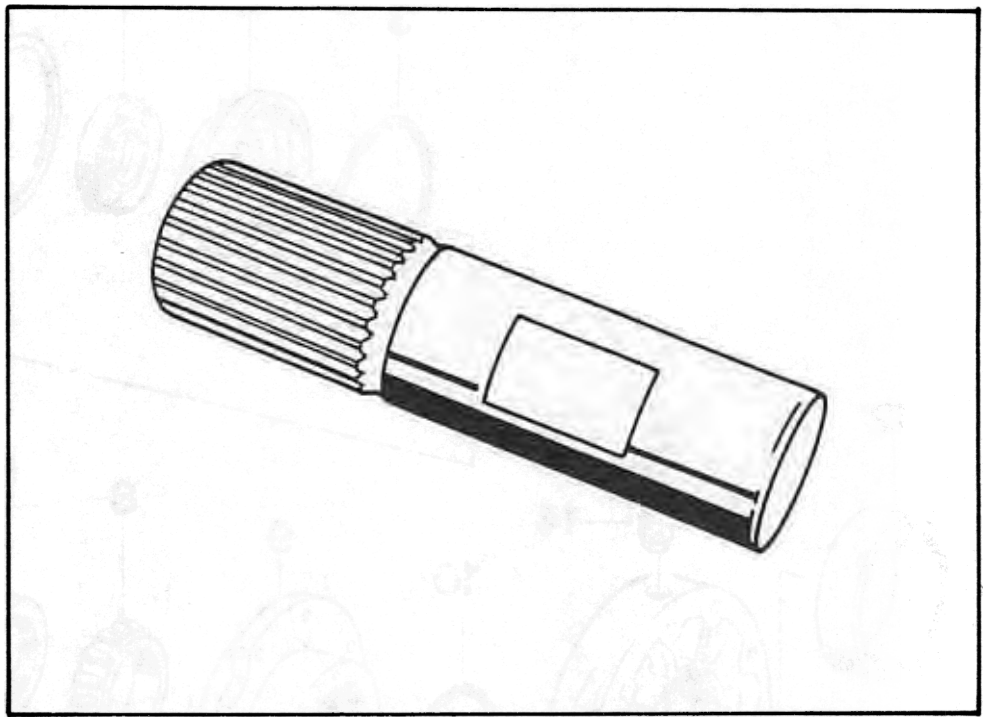

No.	Designation	Special tool	Order number	Explanation
	Retaining device	9340	000.721.934.00	

Printed in Germany – V, 1994

34 48 37 Dismantling and assembling intermediate plate

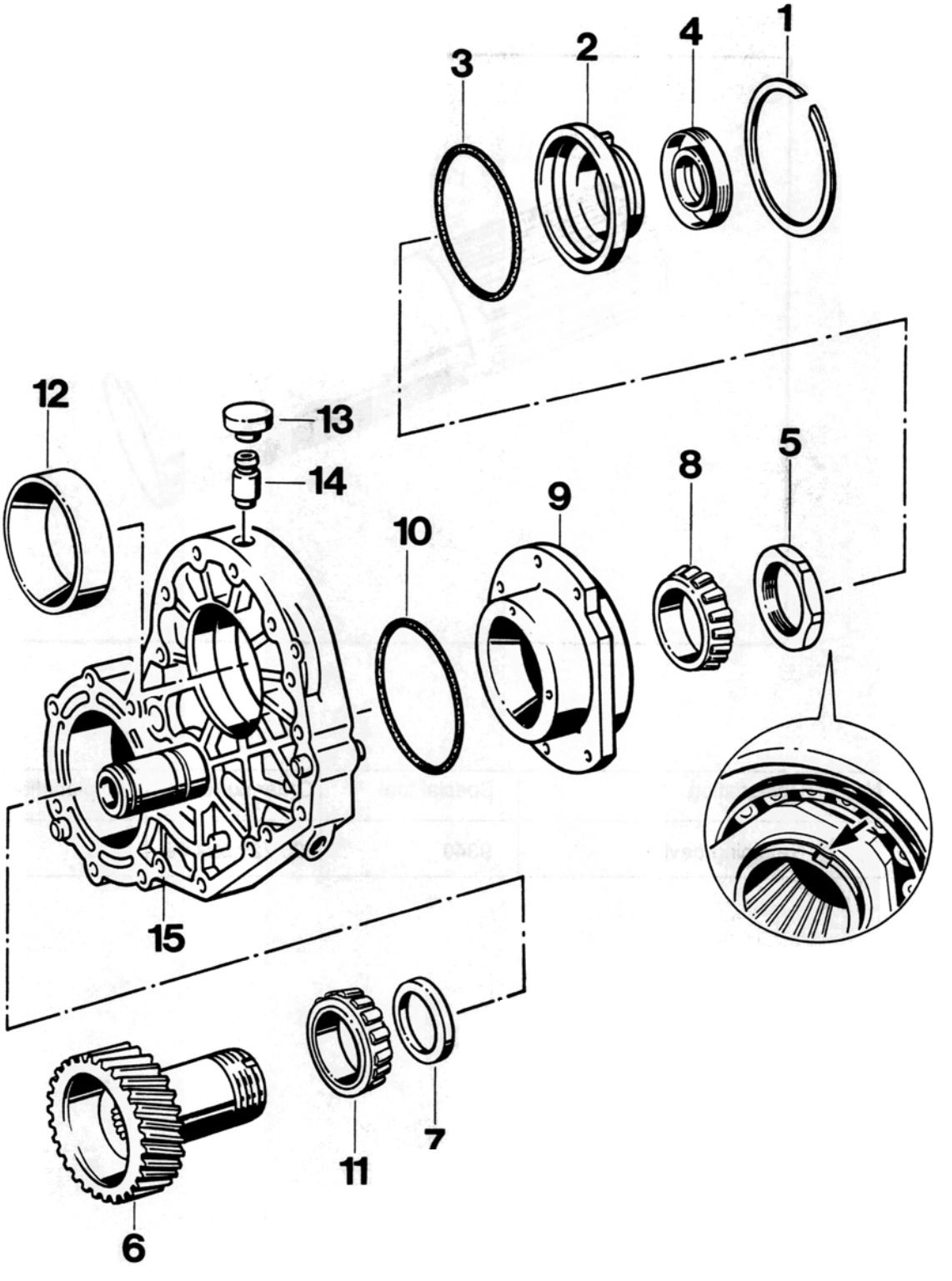

No.	Designation	Qty.	Note: Removal	Installation
1	Snap ring	1		
2	Bearing cover	1	Grab at lugs to lift out	
3	Round seal	1		Replace, coat with ATF fluid
4	Shaft seal	1		Fitting depth 2.0 ± 0.5 mm
5	Lock nut	1	Fit Special Tool 9340 into vise. Put intermediate plate into position and undo nut.	Tighten to 250 Nm (184 ftlb). Lock by upsetting the flange (2 x 180°)
6	Helical gear	1	Press out using a hydraulic press.	Replace only as a set (along with intermediate gear and drive gear)
7	Adjuster ring*	X	Record thickness for reassembly	Thickness can only be determined by manufacturer
8	Inner race of taper roller bearing*	1	Mark for reassembly	Heat to approx. 120°C and press on
9	Bearing cover *	1		
10	Round seal	1		Replace, coat with ATF fluid
11	Inner race of taper roller bearing*	1	Remove across assembly bore of helical gear. Mark for reassembly.	Heat to approx. 120°C and press into place
12	Outer race of taper roller bearing	1		Heat intermediate plate to approx. 120°C and press into place
13	Breather cover	1	Lever off	
14	Breather tube	1	Pull out	Press in to stop
15	Intermediate plate	1		

Note

The parts identified by an * have been preadjusted by the manufacturer.

Printed in Germany - 12, 1995

38 60 29 Flushing ATF cooler and lines

Information

If the ATF is carbonized, or if there is sludge or evidence of lining abrasion in the ATF pump, it is not sufficient merely to repair or replace the gearbox, the ATF cooler and line system must be flushed with ATF.

Attach additional hose of ATF filling device (see Workshop Manual Group 3/4) using special tool **9355/1** to ATF line with conventional twin connecting piece and flush out cooler and line system using filling device. Fluid must not be split on the ground.

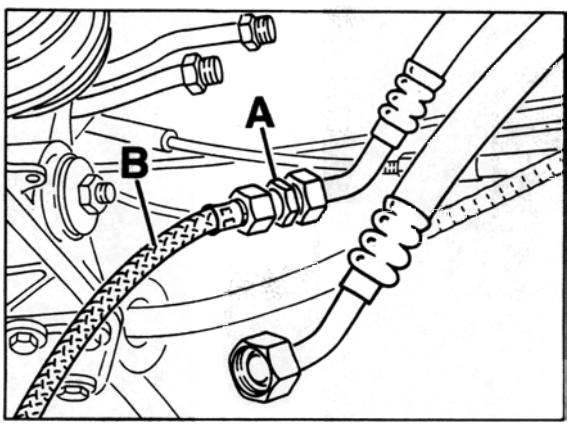

1883-37

A = Special tool 93551
B = Additional hose

Printed in Germany – V, 1994

38 60 R moving nd insta ng ATF ooler

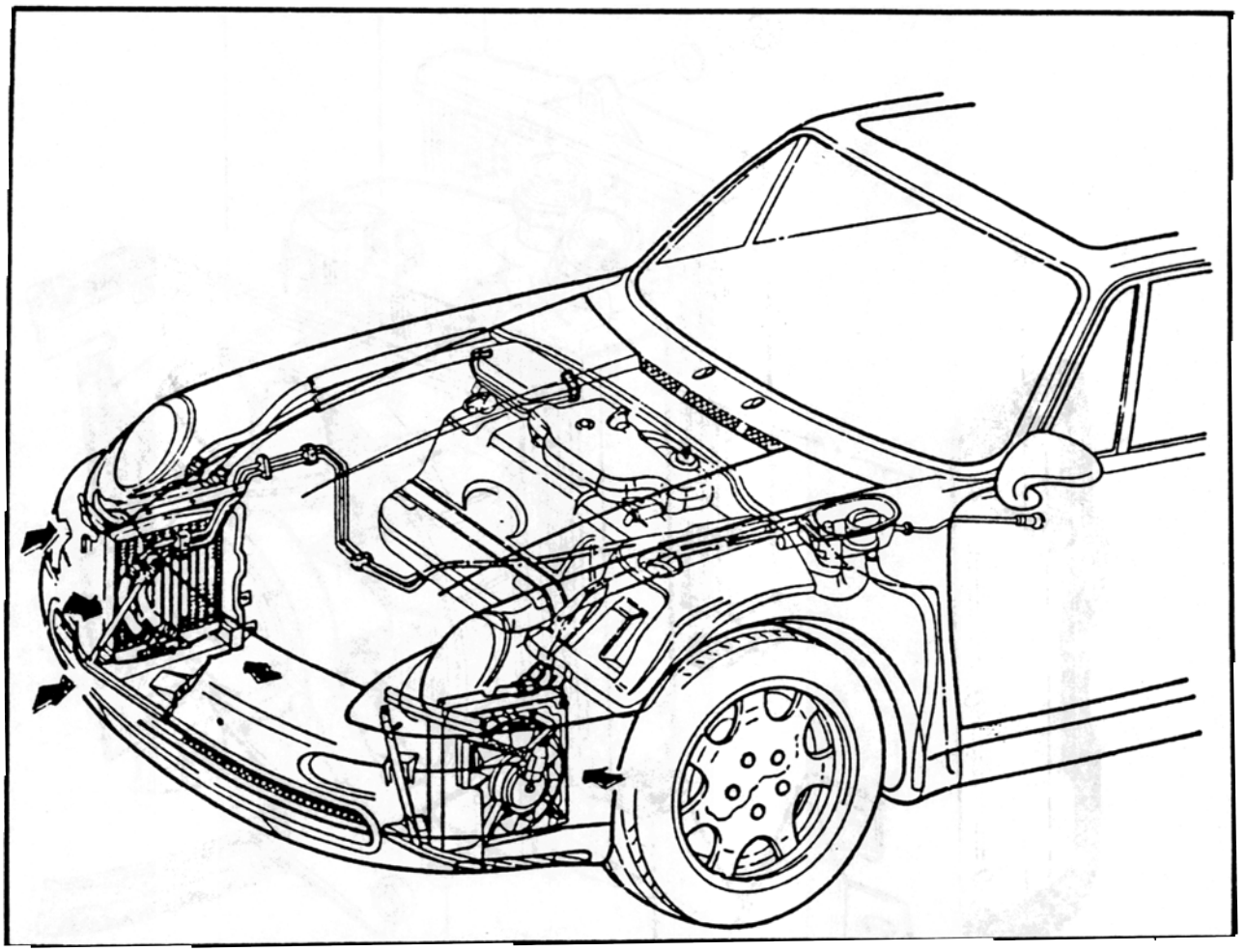

Printed Germany

38 60 Removing and installing ATF cooler

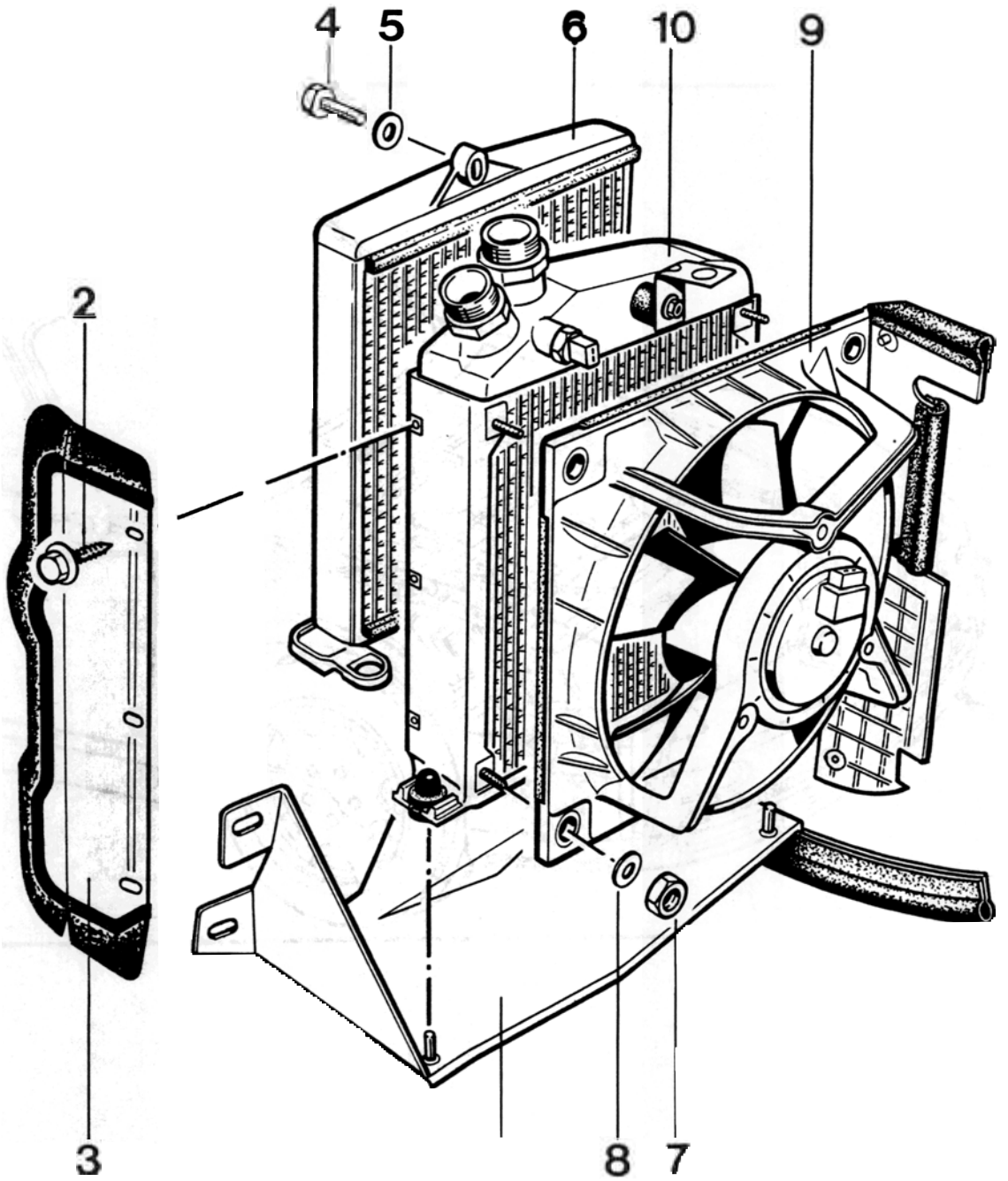

No.	Designation	Qty.	Note: Removal	Installation
1	Bracket	1		
2	Washer-and-screw assembly	3		
3	Air deflector	1		
4	Hexagon screw	1		Tighten to 10 Nm (7.3 ftlb)
5	Washer	1		
6	ATF cooler	1		

Printed in Germany – V, 1994

38 60 19 Removing and installing ATF cooler

Notes

The ATF cooler is installed in the wheel house in front of the right front wheel. It is mounted on the engine oil cooler and cooled by the two-stage electric fan of the engine oil cooler.

Removal

1. Remove right headlight, unclip wire retainer and unscrew hexagon head screw for cooler bracket.

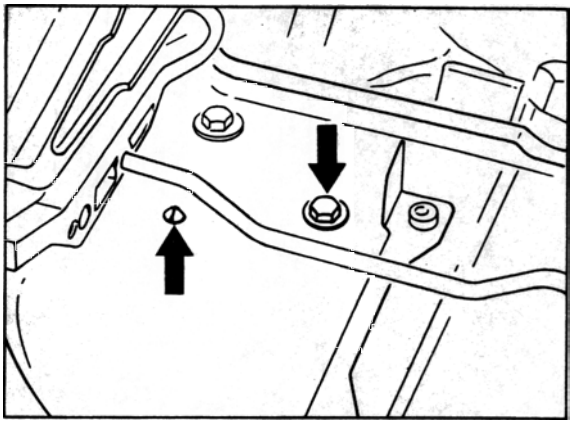

1877-38

2. Remove front wheel housing liner and lower part of front spoiler.

3. Pull connector off electric fan and remove indicator mount by turning it to the left (bayonet lock).

4. Unscrew horn mount from wheel house.

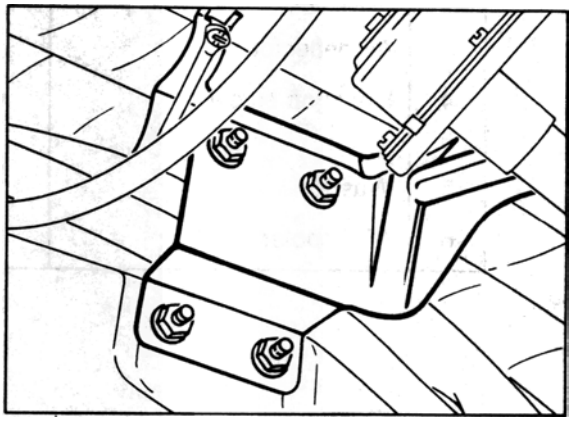

1878-38

5. Remove console. To do so, unscrew three hexagon nuts (M 8) from wheel house and one (M 6) for tension strut.

6. Remove air baffle.

7. Disconnect ATF lines from cooler.

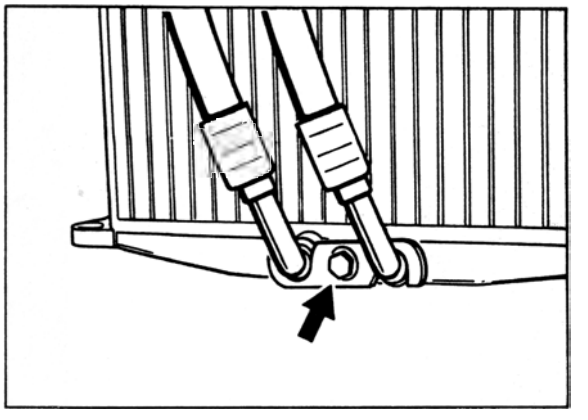

1879-38

8. Unscrew hexagon head screw and remove ATF cooler (illustration shows cooler removed).

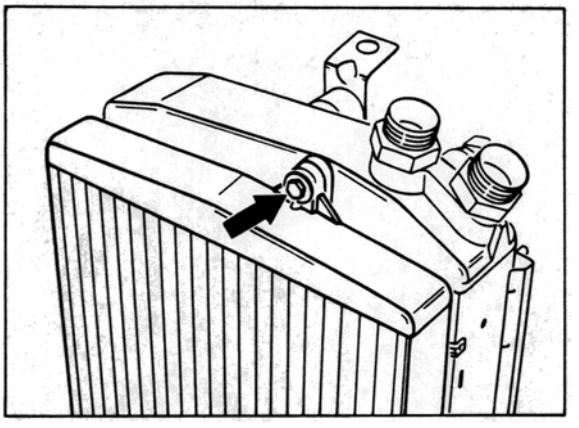

487-38

Note

Do not disconnect oil lines for engine oil cooler. The cooler remains in the wheel house.

Installation

Tightening torques, Nm (ftlb.

Bracket to headlight holder	= 10 (7)
Console to wheel house	= 23 (17)
Tension strut to console	= 10 (7)
ATF cooler to engine oil cooler	= 10 (7)
Bar to ATF cooler	= 10 (7)
Horn holder to wheel house	= 10 (7)

1. Adopt the reverse procedure for installation.

2. Replace O rings for ATF lines on cooler.

3. Check that the rubber edging of the fan housing and the console is correctly positioned.

4. Check, and if necessary top up, ATF level. (see page 37 - 101).

38 17 19 Removing and installing the inductive speed sensor

Removing

1. Remove the transmission underbody cladding and ATF pan (refer to page 38 - 113).

2. Remove the holder for the inductive sensor and pull out sensor

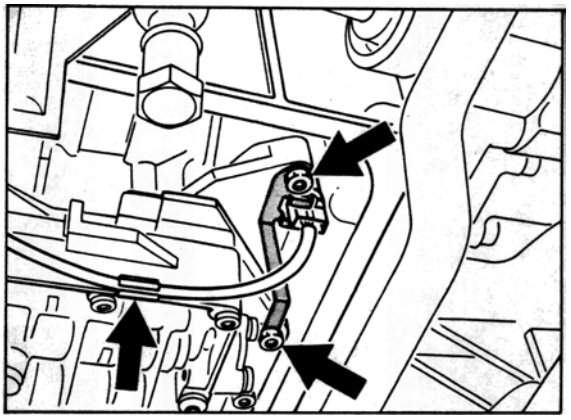

390-38a

Installing

Tightening torque:
Holder to control unit = 8 Nm

Installation takes place in reverse order.

Insert the sensor and mount the holding plate so that the lugs engage in the groove on the connector.

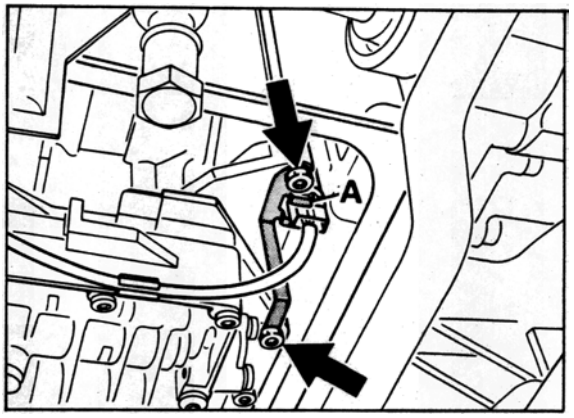

386-38b

A = Connector groove

Printed in Germany – V, 1994

38 90 19 Removing and installing kickdown switch

Removal

The kickdown switch is installed on a console in front of the accelerator pedal.

1. Remove floor board.

2. Remove kickdown switch with mount, unplug connector and remove switch (pressing the retaining lugs).

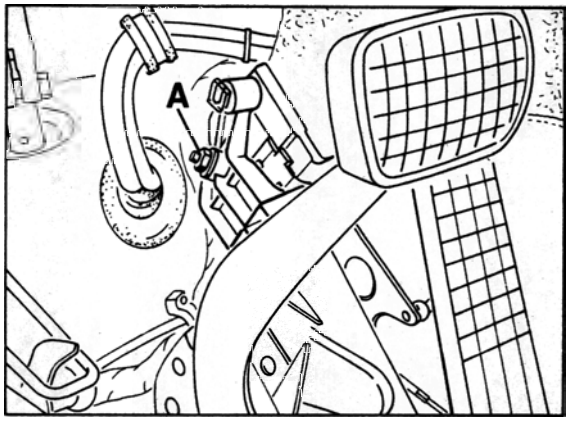

2244-38

A = self-locking nut

Installation

1. Install the parts removed in reverse order.

2. Use new self-locking nut for mount.

3. Place kickdown switch in installation position. With the mounting nut loosened, the mount with switch must be pushed until the actuator arm touches the console when the switch is operated.

4. Tightening torque: mount to console:
   M 6 = 10 Nm (7.5 ftlb)

38 90 15 Adjusting kickdown switch

Prerequisites:

The idle position of the accelerator cable must be correctly adjusted.

Kickdown switch in installation position. (see page 38 - point 3).

1. Connect system tester 9288.

2. Unhook pushrod from accelerator pedal.

3. Switch on system tester and select throttle valve in DME /actual values menu.

4. With the pushrod unhooked, push the accelerator pedal down to the stop (throttle valve open up to stop) and read **throttle position 1** off on system tester.

Note

With the throttle valve open (accelerator pedal fully depressed), the position is 84° ± 30.

5. Hook pushrod back onto accelerator pedal.

6. Push gas pedal down as far as possible **without** operating kickdown switch and read off **throttle position 2** on system tester.
   The position indicated must be 3° less than position 1 (tolerance ± 10).

Note

If the angle is too large, set the pushrod to a shorter position.
If the angle is too small, set the pushrod to a longer position.

After resetting the length of the pushrod, check the angle. It must not be smaller than 79°.

38 18 19 Remov. and installing the wiring harness for the transmission

Removing

1. Remove the transmission underbody cladding.

2. Remove multi-functional switch (see page 37-105).

3. Disconnect the connector from the transmission socket. To do this, turn the bayonet lock to the left and disconnect the connector:

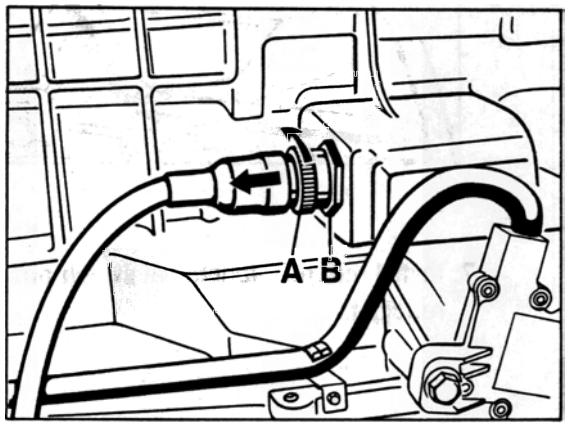

387-38a

A = Bayonet lock
B = Hexagon nut (a/f 30)

4. Unscrew the hexagon nut for the transmission socket with a suitable extension.

5. Remove hydraulic control unit with wire harness (see also page 38-113).

6. Mark the push-on sleeves for re-installation and pull off from the solenoid valves.

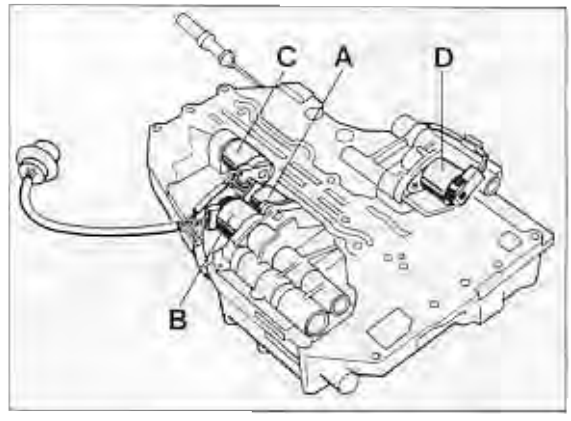

383-38

Installing

1. Push the push-on sleeves for the solenoid valves up to the stop. Pay attention to cable colors.

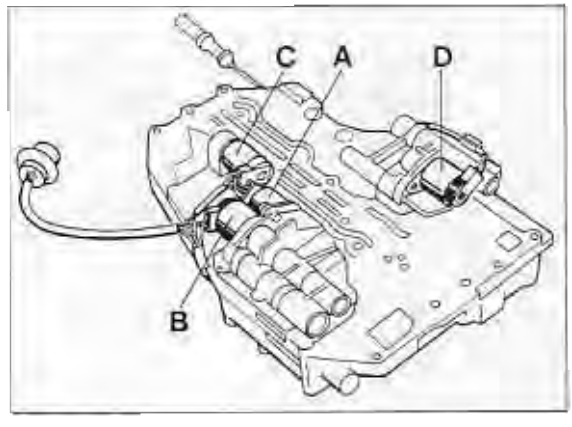

383-38

Printed in Germany – V, 1994

	Solenoid valves	Cable colors
A	Solenoid valve 1	(grey-violet)
B	Solenoid valve 2	(green-violet)
C	Solenoid valve 3	(red-violet)
D	Pressure regulator	(blue-violet)

2. Route wiring harness and hang in cable clamps.

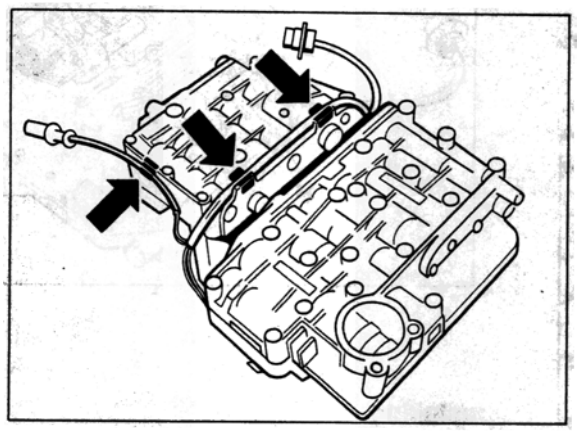

384-38

3. Place hydraulic control unit on a suitable surface (e.g. transmission jack) at installation height.

4. Insert the socket with **new O-ring** so that the flattened side faces upwards. Tighten hexagon nut with **12 Nm (9 ftlb)**.

5. Install hydraulic control unit.

6. Connect wiring harness with transmission socket. To do this, carefully insert the connector in the socket (fits only in one position) and lock by turning the bayonet lock to the right.

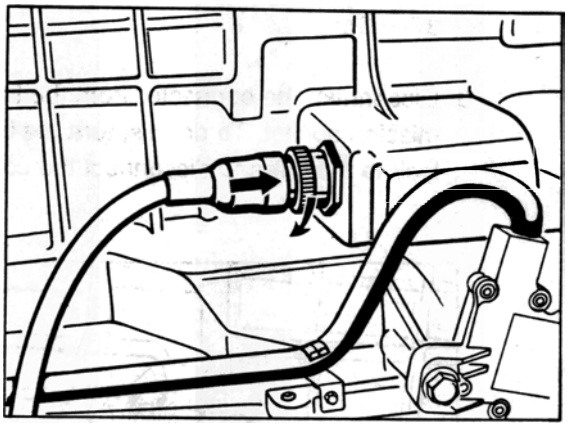

387-38b

7. Install the multi-functional switch and readjust.

Printed in Germany – V, 1994

38 77 19 Dismantling and assembling hydraulic control unit

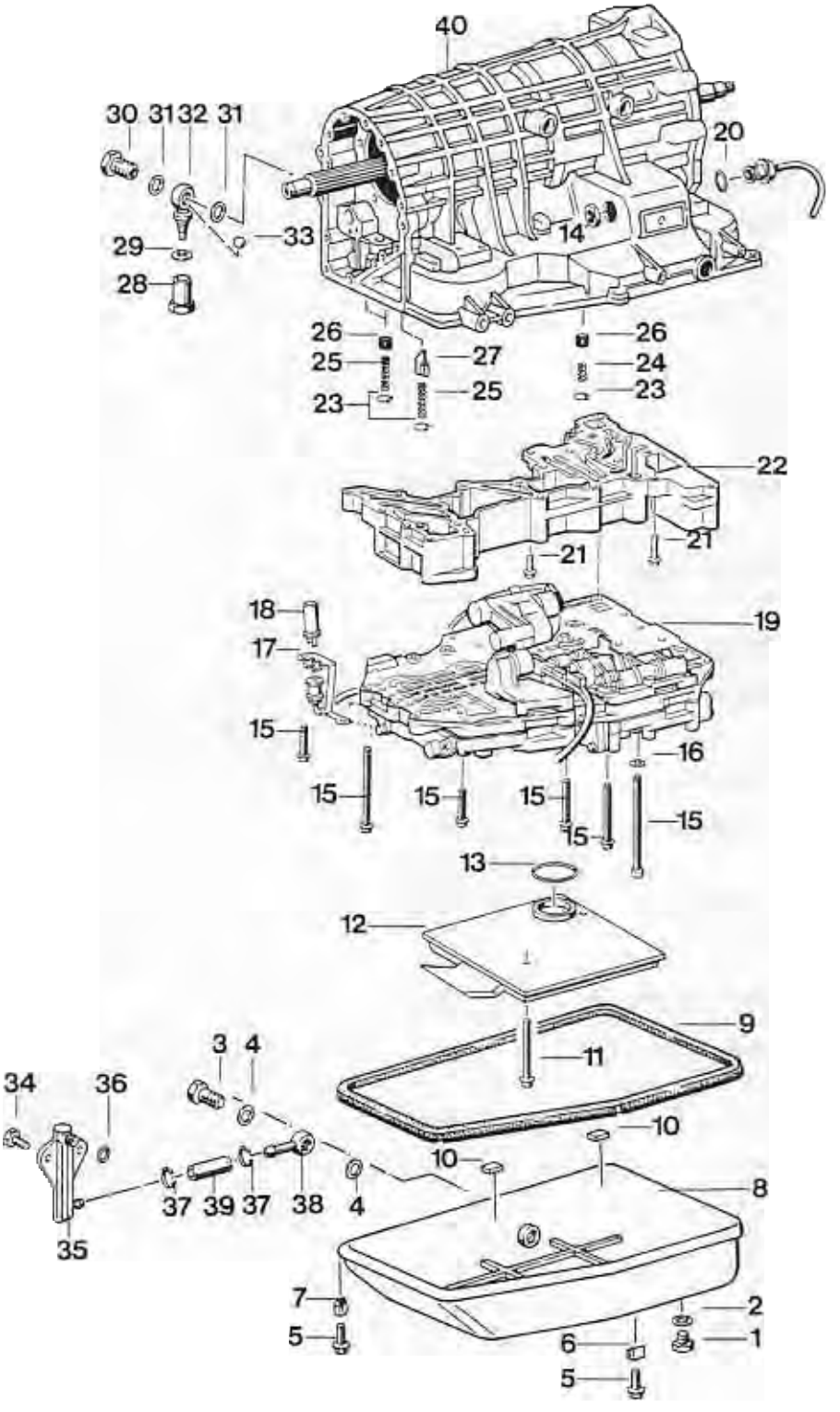

Printed in Germany – V, 1994

No	Designation	Qty.	Note: Removal	Installation
1	Plug	1		Tighten to 40 Nm (29 ftlb)
2	Seal	1		Replace
3	Banjo bolt	1		Tighten to 40 Nm (29 ftlb)
4	Seal	2		Replace
5	Hexagon head bolt	6		Tighten to 6 Nm (4 ftlb)
6	Bracket (straight leg)	2		Short legs must force on the ATF pan
7	Bracket (curved leg)	4		Short legs must force on the ATF pan
8	ATF pan	1		
9	Gasket	1		
10	Magnet	2		Place into grooves in ATF pan
11	Pan head screw (M 6 x 65)	3		Tighten to 8 Nm (6 ftlb)
12	ATF strainer	1		
13	Round seal	1		Replace. Make sure that position is correct
14	Hexagon nut	1		Tighten to 12 Nm (9 ftlb)
15	Pan head screw	14		Observe correct length, tighten to 8 Nm (6 ftlb)
16	Spring washer	1		
17	Bracket	1		
18	Inductive rpm pickup	1		
19	Hydraulic control unit	1		The straight surface on the harness socket must point towards the outside

Printed in Germany – V, 1994

38 77 19 Removing and installing the hydraulic control unit

Removing

The transmission wiring hamess remains on the transmission.

1. Remove the transmission underbody cladding.

2. Drain off ATF fluid.

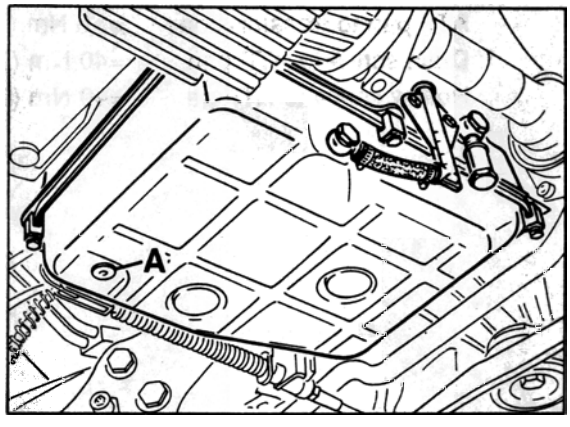

386-38a

A = Drain screw with sealing ring

3. Remove ATF pan. To do this, unscrew hollow screw for oil level pipe and six fixing screws.

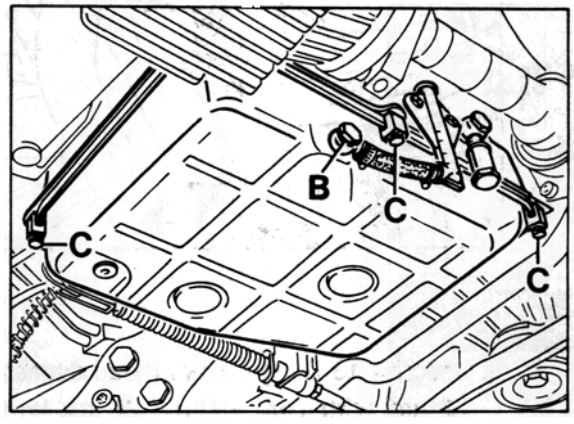

B = Hollow screw
C = Fixing screws

4. Remove ATF strainer with **Torx Insert T 27.**

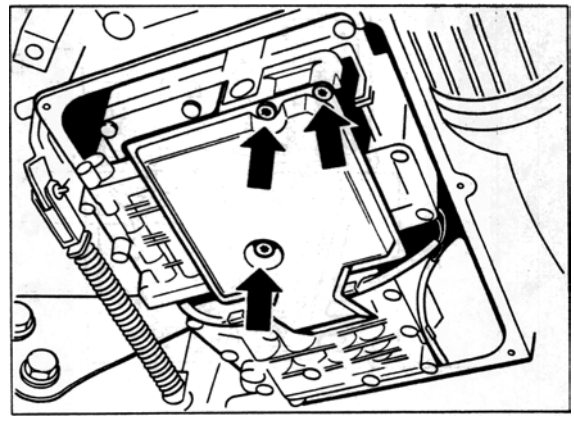

382-38

Printed in Germany – V, 1994

5. Remove inductive speed sensor and pull wiring harness out of holding clamps.

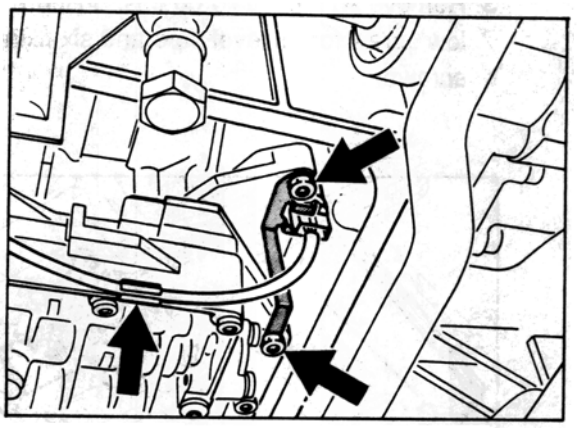

390-38a

6. Unscrew 13 fixing screws (head diameter 12 mm) **with Torx insert T 27** and lower hydraulic control unit only so far as to guarantee that the wiring harness is not subjected to any tension.
   Place the hydraulic control unit on a suitable surface (e.g. transmission jack).

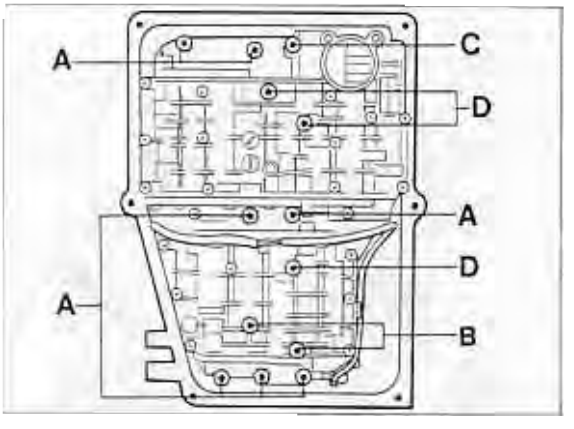

399-38

Note

The hydraulic control unit must not be suspended from the wire harness.

7. Mark the push-on sleeves for re-installation and pull off from the solenoid valves.

8. Pull the wiring harness out of the holding clamps and remove the control unit.

Installing

Installation takes place in reverse order.

1. Tightening torques:

Control unit to transmission	= 8 Nm (6 ftlb)
ATF strainer to control unit	= 8 Nm (6 ftlb)
ATF pan to transmission	= 6 Nm (4 ftlb)
Drain screw to ATF pan	=40 Nm (29 ftlb)
Hollow screw to ATF pa	=40 Nm (29 ftlb)

Printed in Germany – V, 1994

2. Push on push-on sleeves for solenoid valves up to the stop. Pay attention to cable colors.

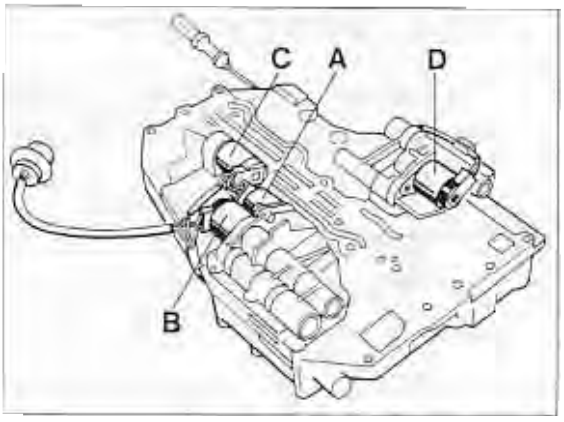

383-38

	Solenoid valves	Cable colors
A	Solenoid valve 1	(grey-violet)
B	Solenoid valve 2	(green-violet)
C	Solenoid valve 3	(red-violet)
D	Solenoid valve (pressure controler)	(blue-violet)

3. Mount the hydraulic control unit so that the pin of the notched disk projects into the recess of the selector slide.

4. Screw in the fixing screws for the hydraulic-control unit and counter slightly. Pay attention to screw lengths.

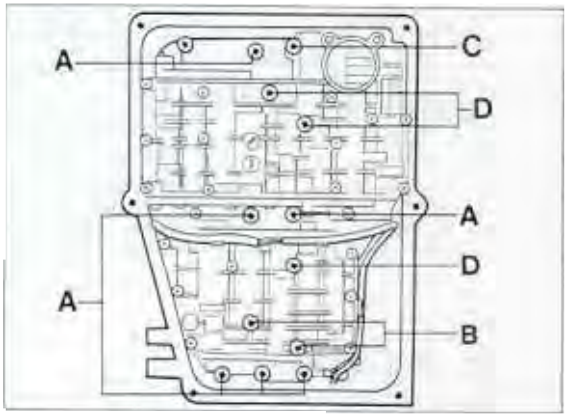

399-38

A = Screw length 80 mm
B = Screw length 65 mm
C = Screw length 115 mm
D = Screw length 60 mm

5. Position hydraulic control unit. To do this, move notched disk to position 1 (1st gear) and push hydraulic control unit back until it rests against the notched disk. Tighten fixing screws with **8 Nm** in this position.

Printed in Germany – V, 1994

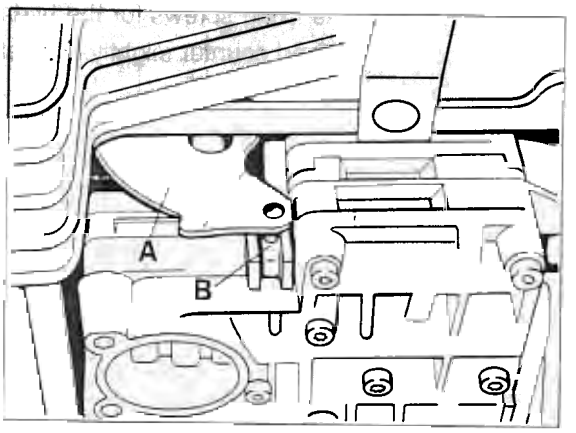

385-38

A = Notched disk
B = Selector slide

6. Insert pulse sensor and mount holding plate so that the lugs engage in the connector grooves.

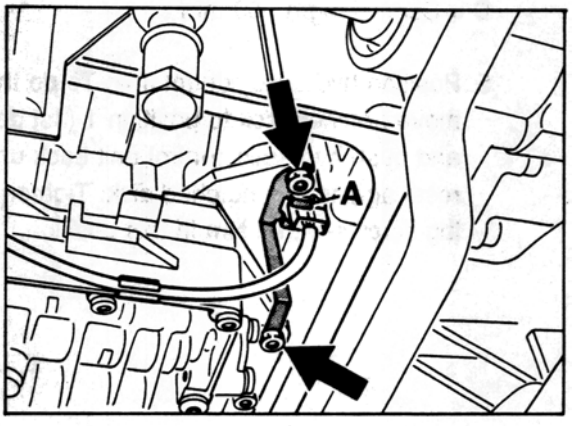

390-38b

7. Fit ATF strainer with O-ring. Tightening torque **8 Nm**.

8. Place two magnets in the beads of the ATF pan, fit seal and secure the pan with the holding brackets so that the short legs press onto the ATF pan.

Note

The two holding brackets with the straight legs must be mounted at the side.

9. Screw in ATF drain screw with new sealing ring. Tightening torque **40 Nm**.

10. Screw in hollow screw for oil level pipe with new sealing rings. Tightening torque **40 Nm**.

11. Fill with ATF fluid
(refer to page 38-103).

38 89 20 Removing and installing solenoid valves

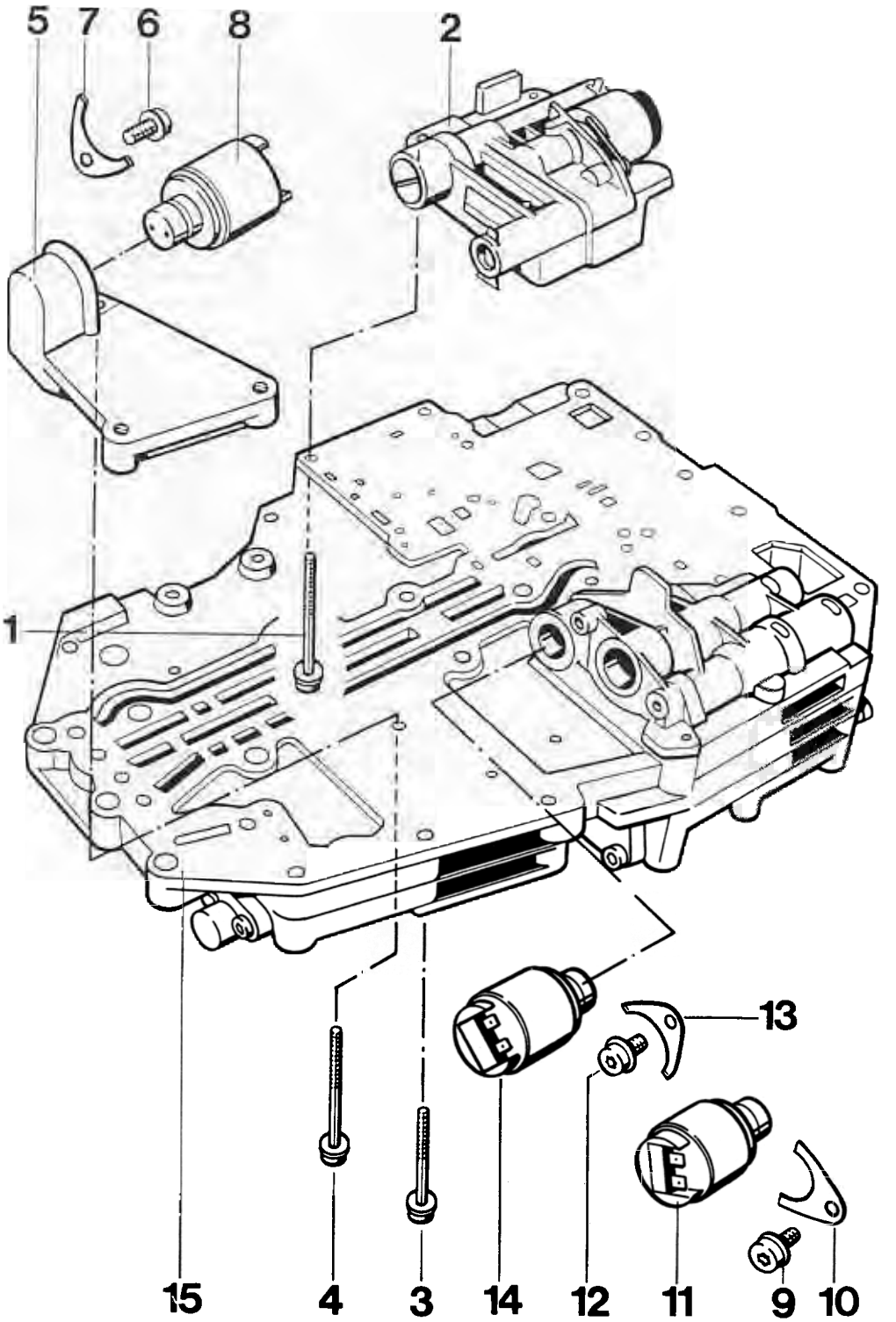

Printed in Germany – V, 1994

No.	Designation	Qty.	Note: Removal	Installation
1	Fillister head screw	5	Remove with Torx insert T 27	Tighten with 5 Nm (4 ftlb)
2	Housing with pressure regulator	1		Set by the manufacturer, only replace complete
3	Fillister head screw	2	Remove with Torx insert T 27	Tighten with 5 Nm
4	Fillister head screw	1	Remove with Torx insert T 27	Tighten with 5 Nm
5	Holder	1		
6	Fillister head screw	1	Remove with Torx insert T 27	Tighten with 5 Nm
7	Holding plate	1		Fit in correct position, lugs point to holder No. 5
8	Solenoid valve 3	1	Mark for re-installation	Do not confuse with solenoid valves Nos. 11 and 14
9	Fillister head screw	1	Remove with Torx insert T 27	Tighten with 5 Nm
10	Holding plate	1		Fit in correct position, lugs point to housing
11	Solenoid valve 2	1	Mark for re-installation	Do not confuse with solenoid valves Nos. 14 and 8
12	Fillister head screw	1		Tighten with 5 Nm
13	Holding plate			Fit in correct position, lugs point to housing
14	Solenoid valve 1	1	Mark for re-installation	Do not confuse with solenoid valves Nos. 11 and 8
15	Hydraulic control unit	1		

Printed in Germany – V. 1994

38 56 19 Removing and installing the ATF pump

Removing

1. Remove transmission.

2. Remove torque converter and final drive.

3. Unscrew fixing screws with **Torx insert T27** and remove pump. To do this, screw in two screws opposite each other and carefully drive out the pump by gentle blows on the screw heads

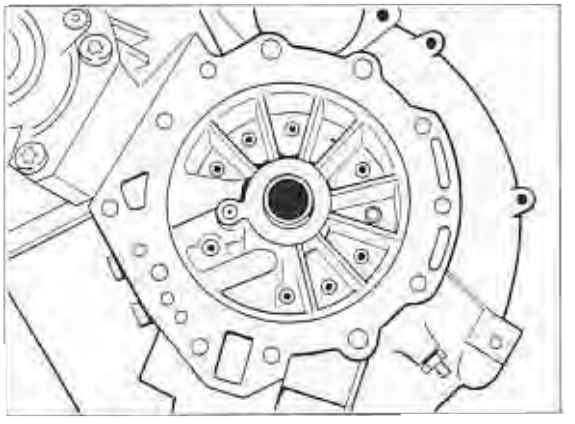

406-38

Installing

1. Check bearing bush for run-in scores or damage. The pump must be replaced if there are signs of damage.

2. Oil both pump wheels with ATF fluid and place in the housing so that both installation markings are visibly facing up.

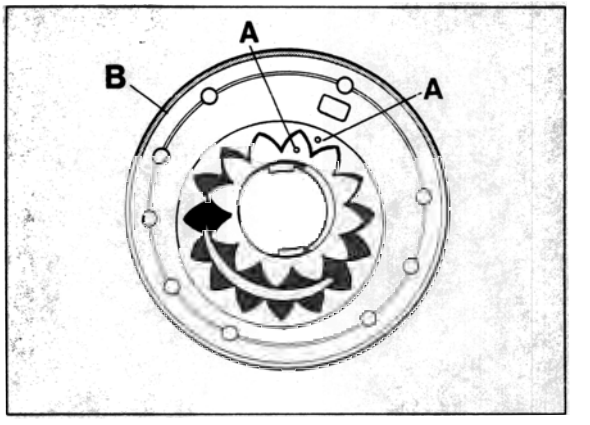

405-38

A = Installation markings
B = O-ring

3. Install pump with new O-ring and centering sleeve. Tighten fixing screws with **10 Nm**.

4. Check pump for easy operation. It must be possible to turn the pump by hand with special tool **9329** without it catching.

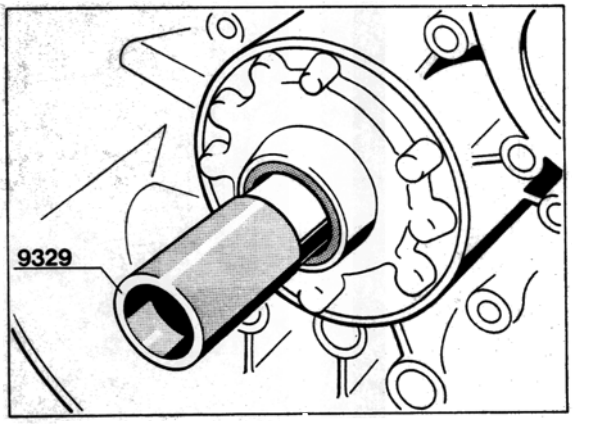

421-38

Printed in Germany – V, 1994

38 10 05 Determining the end clearance

Specification: 0.2...0.4 mm

Note

Check the end clearance whenever the transmission has been reassembled and readjust if required, using adjusting washer No. 12 (refer to page 39 - 111).

1. Assembly transmission (complete with spur gear drive and front transmission cover).

2. Screw centering pins **9321** into transmission case and apply some grease (vaseline) to stick paper gasket to sealing surface.

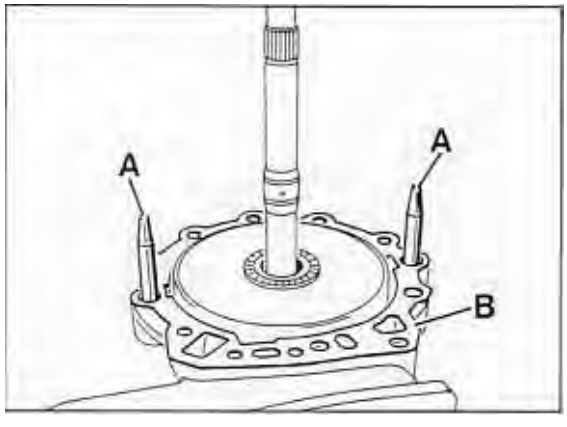

964-38

A - Centering pins **9321**
B - Gasket

3. Using some grease (use vaseline), stick the removed adjusting washer to the final drive and put housing carefully into position.

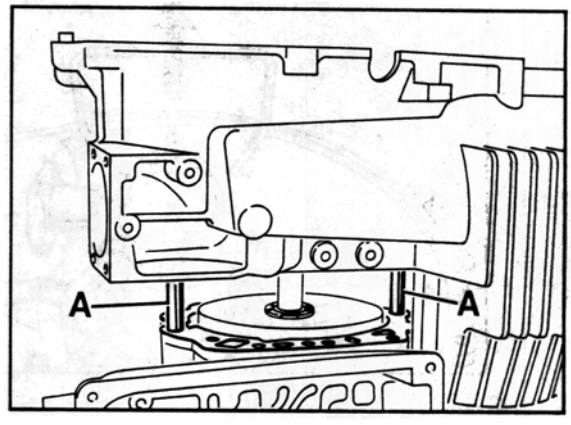

961-38

A - Centering pins **9321**

4. Tighten all mounting screws to 46 Nm (34 ftlb).

5. Mount measuring sleeve of Special Tool **9338** with three mounting screws on the stator shaft in such a manner that no play remains.

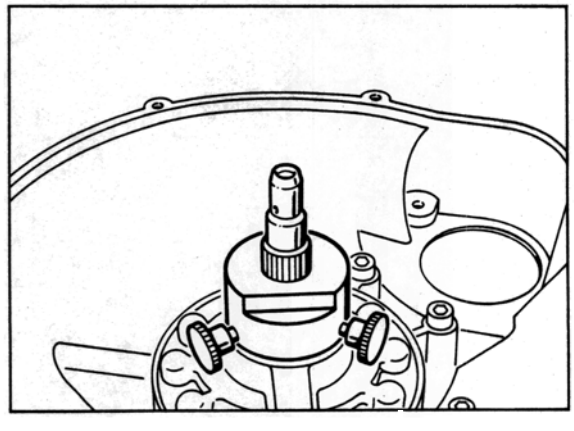

962-38

Printed in Germany – V, 1994

6. Slide measuring device of Special Tool **9338** over drive shaft teeth and tighten with clamping screw so that it cannot be tilted.

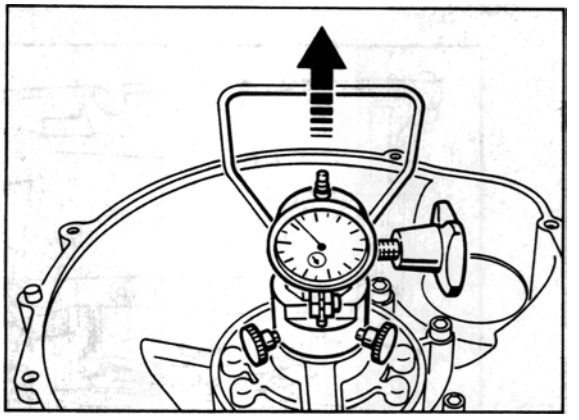

963-38

7. Set measuring sleeve to zero with a certain preload.

8. Determine end clearance by pulling the handle. Repeat measurement several times.

Note

If a deviation is detected, remove final drive again and fit a thinner or thicker adjusting washer as required.
Recheck end clearance afterwards.

38 91 05 Adjusting the preload of the spur gear taper roller bearings

Adjusting spur gear II (intermediate gear)

1. Determine and record dimension "a" (e.g. 45.90 mm).

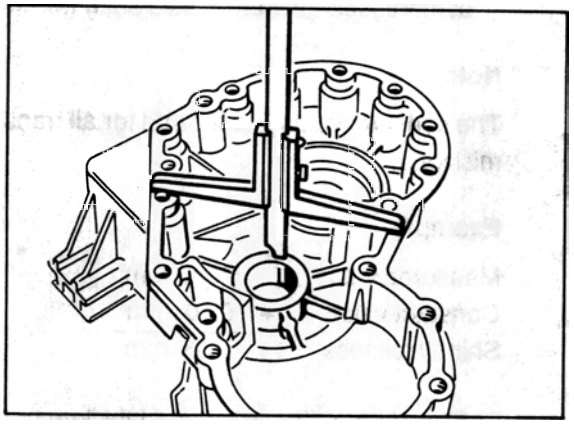

1030 - 39

2. Fit complete spur gear II and determine dimension "b" (e.g. 44.65 mm). Record measured value.

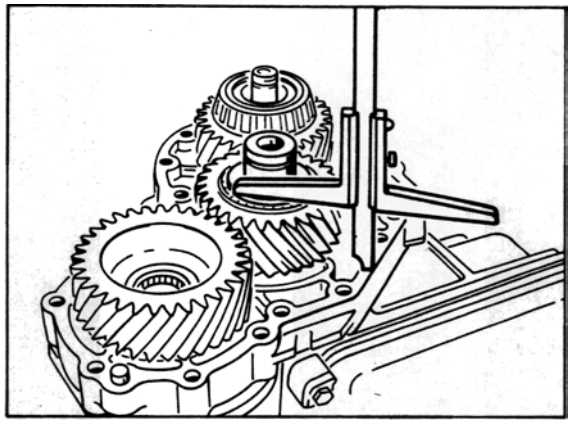

1031 - 39

3. Determine shim thickness by deducting dimension "b" from dimension "a" and adding a constant value of 0.22 mm (preload and thickness of compressed gasket).

Note

The constant value is 0.22 mm for all transmissions.

Example

Dimension "a" e.g.	45.90 mm
Dimension "b" e.g.	– 44.65 mm
	1.25 mm
Constant	+ 0.22 mm
Shim thickness	1.47 mm

Note

Always round shim thickness up or down to the nearest 0.05 mm figure.

Printed in Germany – V, 1994

Adjusting spur gear I (drive gear)

1. Remove intermediate plate.

2. Remove adjusting shim (refer to page 37 - 108, No. 16).

3. Remove spur gear II (intermediate gear) for measurement.

4. Bolt up cover with intermediate plate (but without gasket).
   Tighten all screws and bolts to 23 Nm (17 ftlb).

5. Internal puller (e.g. Schrem 20 - 30) into spur gear teeth.

6. Fit dial gauge holder VW 387 with dial gauge and zero out dial gauge with a preload of 2 mm.

7. Move spur gear I up and down on internal puller and read off play on dial gauge (e.g. 1.18 mm).

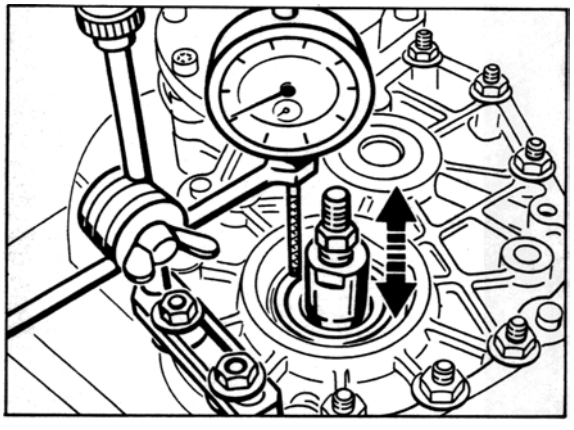

1029 - 39

A = Dial gauge extension
B = Internal puller

Note

Do no turn or tilt the spur gear when measuring the clearance. Repeat measuring process several times.

8. Determine shim thickness. Measured value plus 0.20 mm (preload and thickness of compressed gasket) equals shim thickness

Note

The constant value is 0.20 mm for all transmissions.

Example

Measured value		1.18 mm
Constant value	+	0.20 mm
Shim thickness		1.38 mm

9. Fit a shim of the determined thickness (1.38 mm in our example).

Note

Always round shim thickness up or down to the nearest 0.05 mm figure.

Printed in Germany – V, 1994

38 74 37 Disassembling and assembling the parking lock

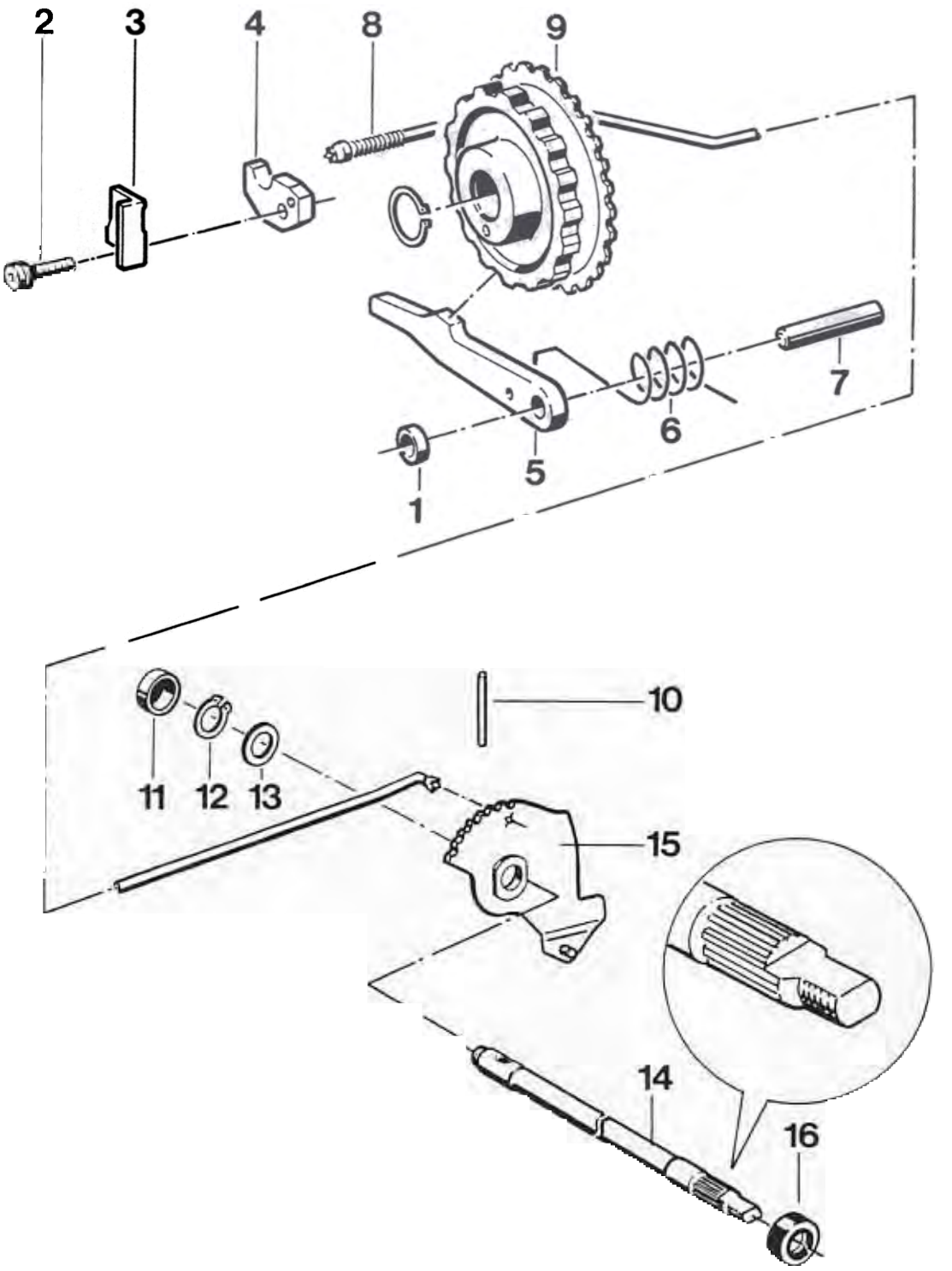

Printed in Germany – V. 1994

No.	Designation	Qty.	Note: Removal	Installation (= ftlb)
1	Bushing	1		
2	Fillister head screw	1	Remove with Torx insert T27	Tighten with 10 Nm
3	Guide plate	1		
4	Guide piece	1		
5	Catch	1		
6	Spring	1		Insert in correct position
7	Pin	1		
8	Circlip	1		
9	Parking lock wheel	1		Make sure that the square ring is correctly seated
10	Clamping pin	1		
11	Protective cap	1	Drive out to the outside by gentle blows on shaft No. 14	Replace
12	Circlip	1		
13	Shim ring	1		
14	Shaft	1	Mark installation position	Insert in correct position
15	Notched disk	1		
16	Rotary shaft seal	1	With transmission in built-in condition, remove multi-functional switch and carefully lever out with a suitable screwdriver	Wind plastic insulating tape around the shaft toothing as an assembly aid, slightly oil sealing lip and press in flush

Printed in Germany – V, 1994

Work instructions for disassembling and assembling

Disassembling

1. Remove transmission.

2. Remove intermediate plate.

Note

Part Nos. 11 to 15 can be removed only when the final drive and the ATF pan have been dismantled.

Assembly

1. Replace O-ring on output shaft.

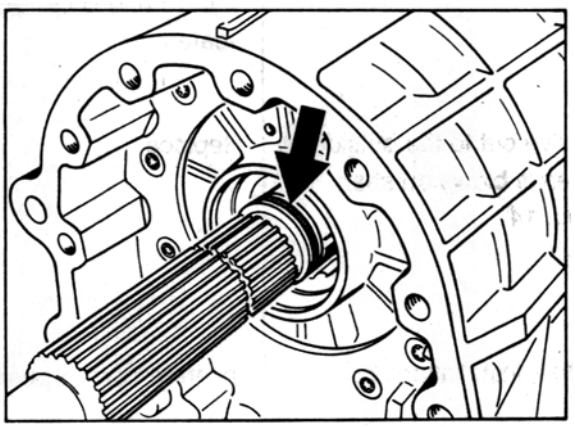

417-37

2. Insert spring for catch in correct position.

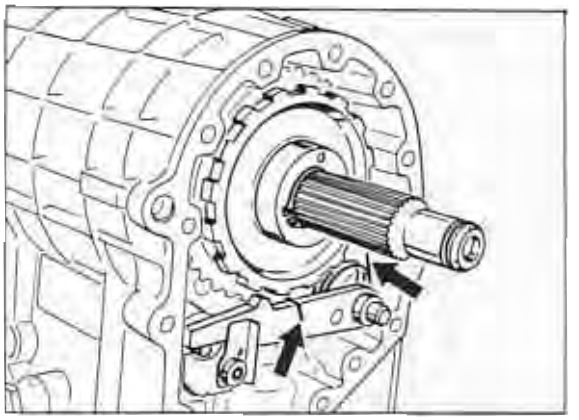

418-37

Printed in Germany – V, 1994

39 25 37 Disassembling and assembling the long joint flange

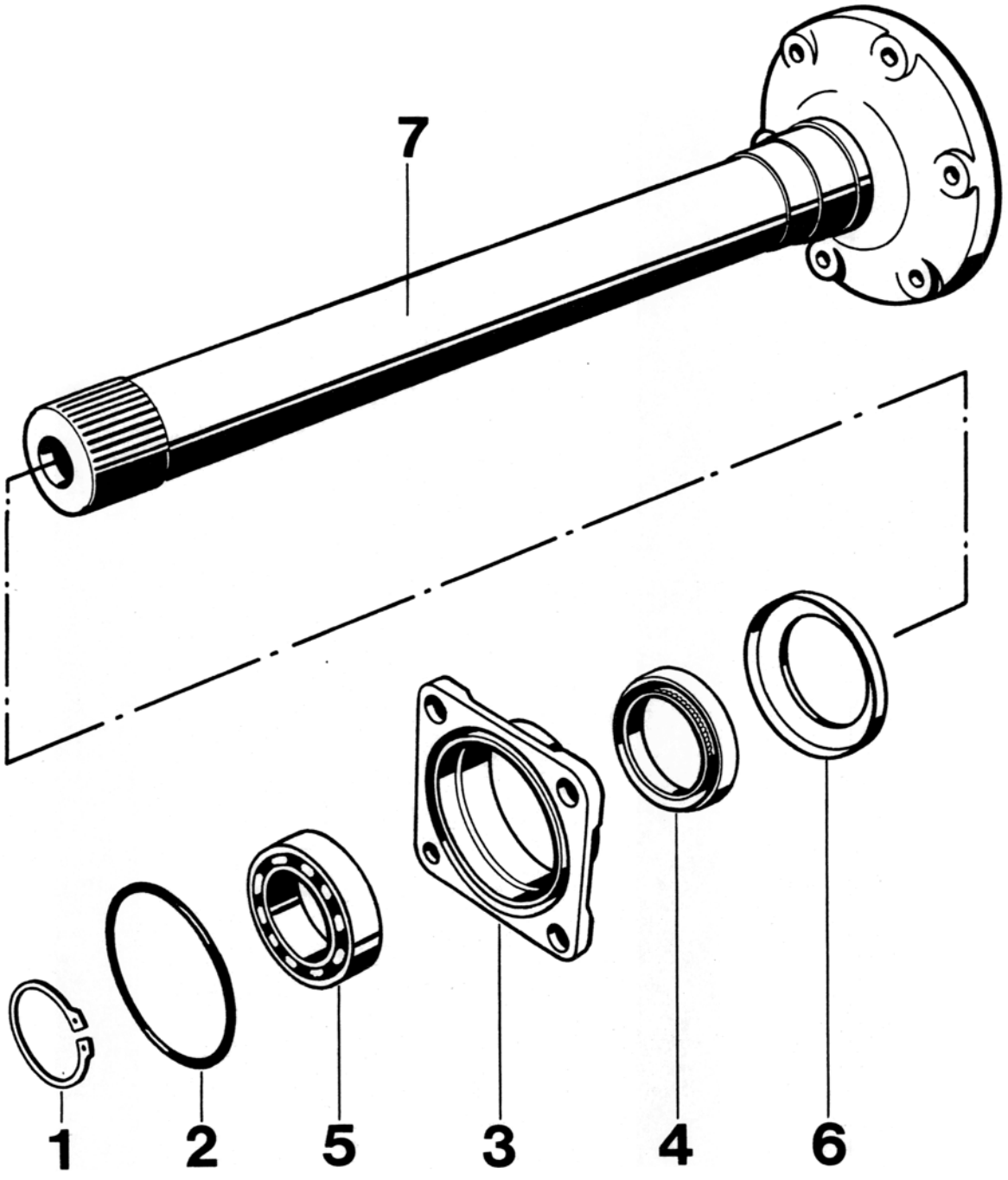

No.	Designation	Qty.	Note: Removal	Installation
1	Circlip	1		
2	O-ring	1		Replace
3	Bearing cap	1		
4	Rotary shaft seal	1		Pack space between dust lip and sealing lip with grease (e.g. Shell 8420) and press in flush with suitable thrust piece
5	Ball bearing	1	Press off jointly with bearing cap	Press in until it bottoms with a suitable pressure piece
6	Protective ring	1		
7	Joint flange	1		

Printed in Germany – V, 1994

39 25 19 Removing and installing long halfshaft flange

With transmission installed

Removal

1. Remove drive shaft (see page 42 - 17).

2. Unscrew pan head screws of halfshaft flange using special tool **9330** and pull out flange.

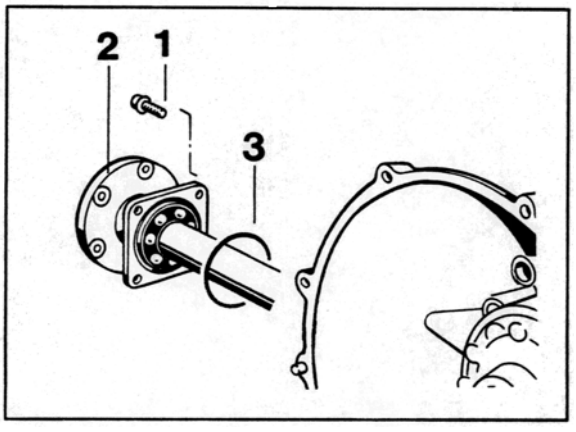

2184-39

1 = pan head screw
2 = halfshaft flange
3 = O-ring

Installation

1. Install the parts in the reverse order of dismantling

2. Replace O-ring. Slightly oil new O-ring.

3. Tighten pan head screws to **23 Nm** (17 ftlb).

Printed in Germany - 12, 1995

39 26 19 Removing and installing short halfshaft flange

With transmission installed

Removal

Note

The halfshaft flange can only be removed if the suspension is partially disconnected.

1. Remove right rear wheel, engine / transmission guard and rear underside panel.
2. Remove heating pipe.
3. Remove control arm cover.
4. Disconnect drive shaft from transmission flange.
5. Partially disconnect suspension (see page 42 - 17 from point 4).

Note

The drive shaft need not be disconnected from the wheel.

6. Unscrew fastening bolt for halfshaft flange (the illustration shows the transmission removed).

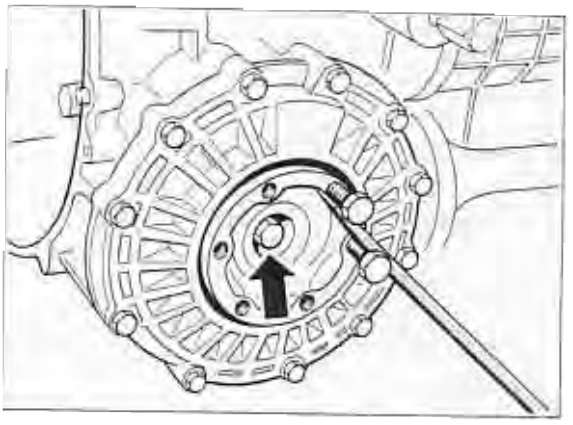

408-39

7. Lift wheel carrier using a suitable lever and take out flange (2nd person required).

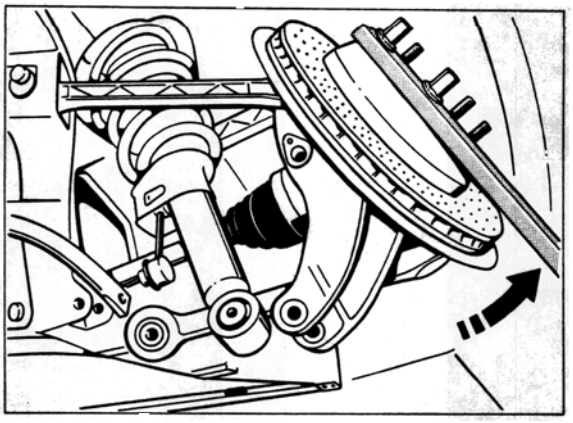

2085-42

Installation

1. Install the parts in the reverse order of removal.

2. Tighten screws to specified torque figures.

39 22 19 Removing and installing the rotary shaft seal for the short joint flange

Removing

Note

The rotary shaft seal can also be replaced with the transmission in built-in condition.

1. Unscrew the hexagon screw for the joint flange and remove flange.

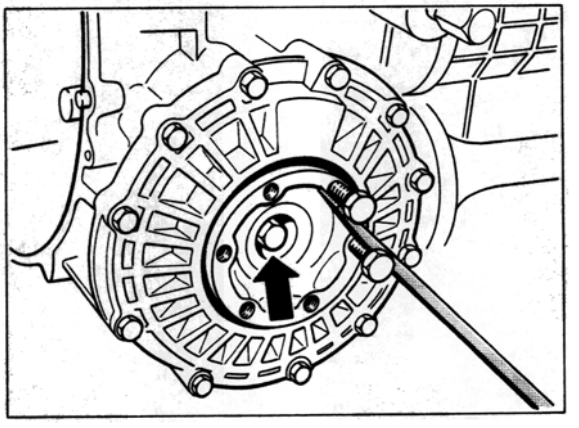

408-39

2. Lever out rotary shaft seal with **VW 681**

Installing

1. Press in rotary shaft seal flush with suitable pressure piece.

2. Tighten hexagon screw for joint flange with **46 Nm (34 ftlb)**.

39 28 19 Removing and installing drive pinion seal rings

1. Drain ATF

2. Remove engine with gearbox (do not unbolt engine from gearbox.

3. Remove intermediate plate (see page 37 - 125).

4. Remove bearing cap with **Torx insert T 27** and replace rotary shaft seal. Pack space between dust lip and sealing lip with grease (e.g. Shell 8420).
Press-in depth 2.0 ± 0.5 mm.

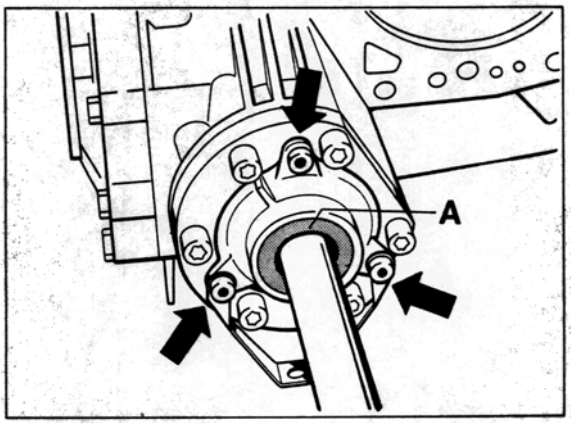

A = Rotary shaft seal 422-39

5. Fit bearing cap with new O-ring and tighten fixing screws with **10 Nm (7.5 ftlb).**

6. Remove snap ring for bearing cap at intermediate plate and pull out cap.

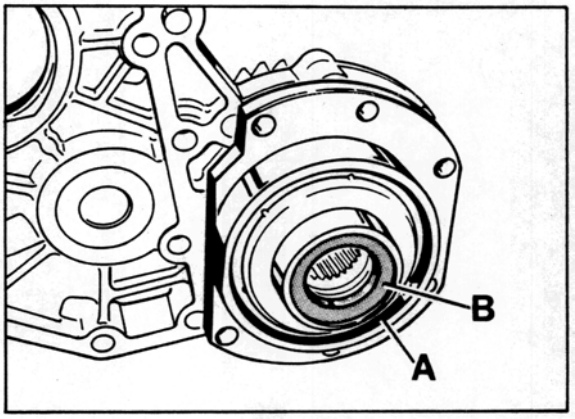

423-39

A = Snap ring

B = Rotary shaft seal

7. Replace rotary shaft seal.
Pack space between dust lip and sealing lip with grease (e.g. Shell 8420).
Press-in depth 2.0 ± 0.5 mm

8. Fit new O-ring and wet with ATF.

9. Insert bearing cap and fit snap ring.

10. Fill with ATF.

Printed in Germany – V, 1994

39 01 19 Removing and installing rear transmission case

Tools

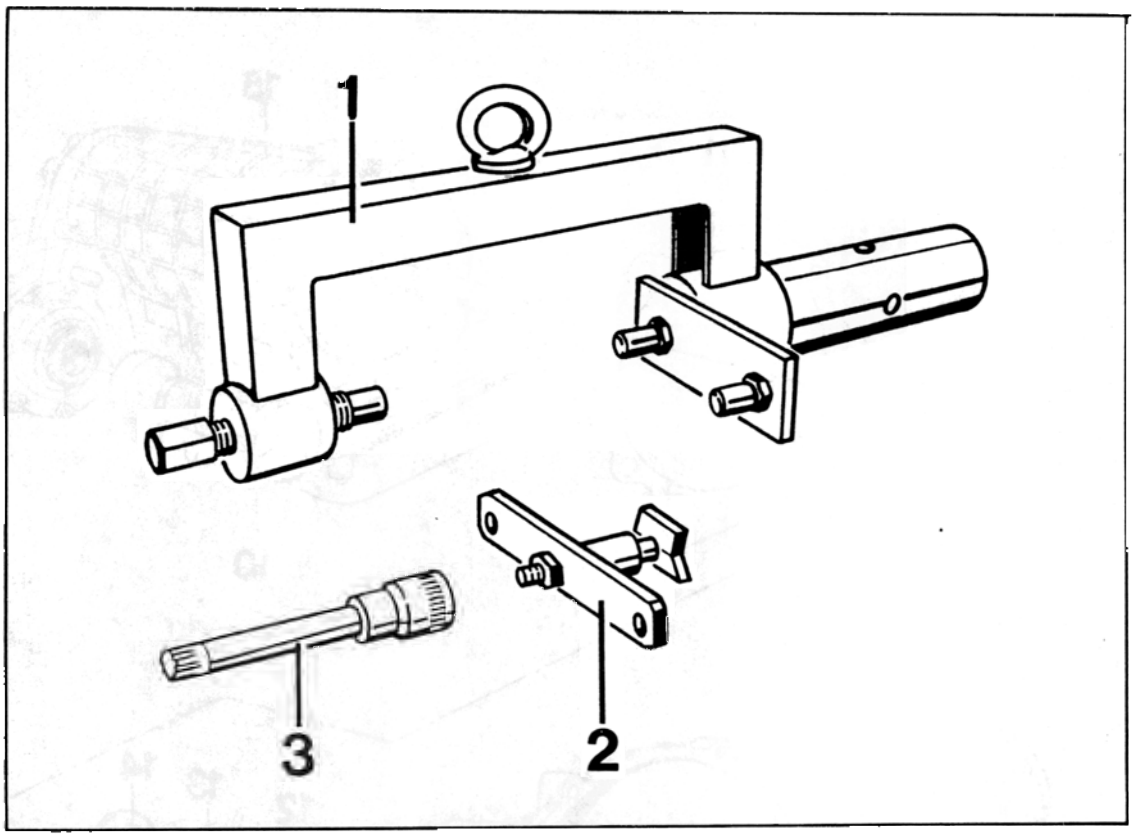

No.	Designation	Special tool	Order number	Explanation
1	Transmission holder	9324	000.721.932.40	
2	Holding device	9325	000.721.932.50	
3	socket key insert	9330	000.721.933.00	

Printed in Germany – V, 1994

39 01 19 Removing and installing final drive

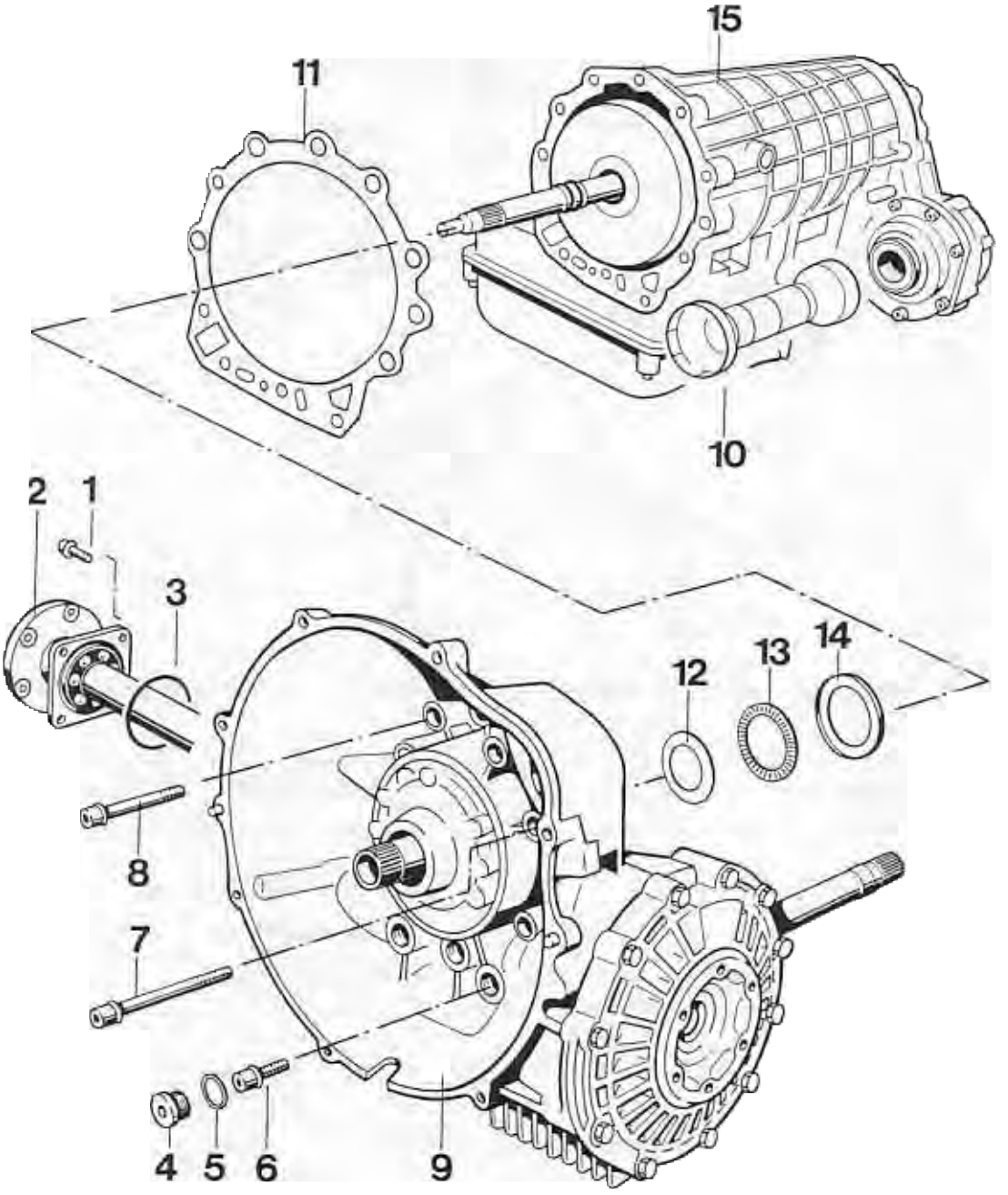

424-37

Printed in Germany – V, 1994

No.	Designation	Qty.	Note: Removal	Installation (= ftlb)
1	Fillister head screw	4	Use Special Tool 9330 to remove	Tighten witht 23 Nm (17)
2	Joint flange	1		
3	O-ring	1		Replace, oil slightly
4	Screw plug	3	Remove with Torx insert T55	Tighten with 50 Nm (36)
5	Sealing ring	3		Replace
6	Fillister head screw	3	Remove with Torx insert T50	Tighten with 46 Nm (34)
7	Fillister head screw	3	Remove with Torx insert T50	Tighten with 46 Nm (34)
8	Fillister head screw	6	Remove with Torx insert T50	Tighten with 46 Nm (34)
9	Rear transmission case	1		
10	Protective tube	1		Large diameter to final drive
11	Seal	1		Replace, glue to case with a small quantity of grease (vaseline)
12	Shim*	X	Note thickness for re-installation	Redertermine thickness if required (refer to page 38 - 171)
13	Needle cage	1		
14	Angle ring	1		Fit in correct position
15	Automatic transmission	1		Pay attention to installation position of clutch A. Make sure that the square drive shaft rings are correctly fitted. Coat the drive shaft with a small quantity of grease in the area of the square rings.

* Must be checked and, if required, corrected after each transmission installation.

Printed in Germany – V. 1994

Assembly instructions for removal and installation

Removal

1. Remove the transmission and torque converter.

2. Secure transmission on assembly block with holding device **9324**.

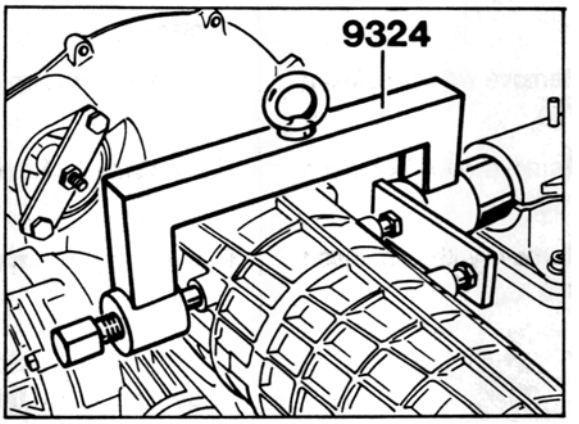

415-37

Installation

1. Check the installation position of clutch A. The installation depth has been reached when the distance **"C" is approx. 8.5 mm**.

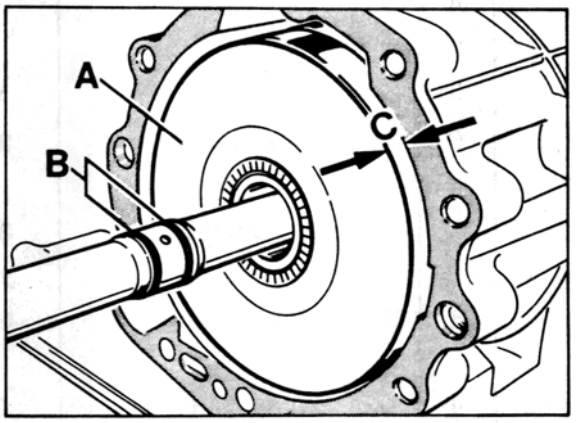

416-37

A = Clutch A
B = Square rings
C = Installation depths

39 09 19 Removing and installing differential and drive pinion

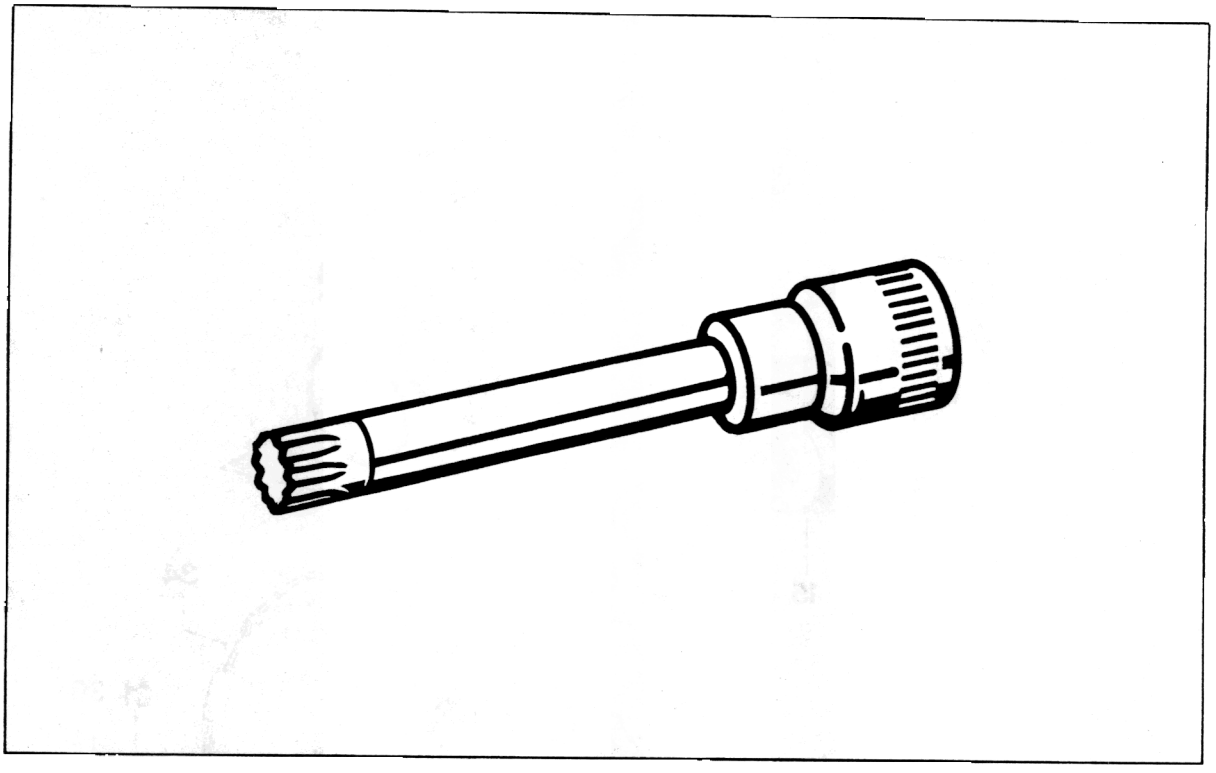

No.	Designation	Special tool	Order number	Explanation
	Socket	9330	000.721.933.00	

Printed in Germany – V, 1994

39 09 19 Removing and installing differential and drive pinion

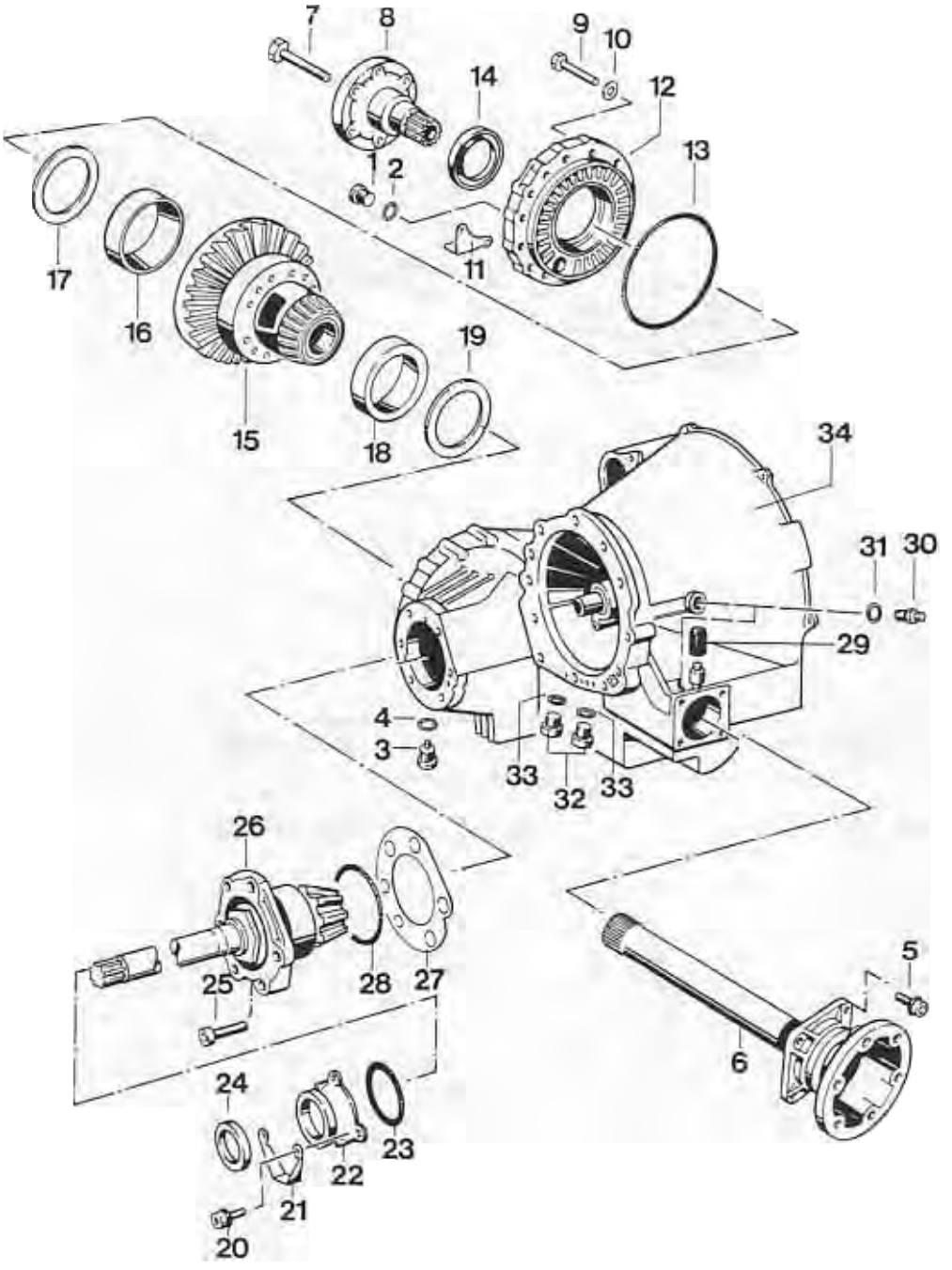

946-39

Printed in Germany – V, 1994

No.	Designation	Qty.	Note: Removal	Installation
1	Plug	1		Tighten to 50 Nm (37 ftlb)
2	Seal	1		Replace
3	Plug with solenoid	1		Tighten to 50 Nm (37 ftlb)
4	Seal	1		Replace
5	Pan head screw	4	Remove with Special Tool 9330	Tighten to 23 Nm (17 ftlb)
6	Halfshaft flange	1		For dismantling, refer to page 39 - 102
7	Hexagon head bolt	1		Tighten to 46 Nm (34 ftlb)
8	Halfshaft flange	1		
9	Hexagon head bolt	11		Tighten to 23 Nm (17 ftlb)
10	Spring washer	11		
	Bracket	1		
12	Transmission side cover	1		
13	Round seal	1		Replace, oil lightly
14	Shaft seal	1	Replace	Pack space between dust lip and sealing lip with grease (e.g. Shell 8420) and press in flush
15	Differential	1		
16	Taper roller bearing outer race	1		
7	Adjusting shim "S_1"	X	Record thickness for refitting	Redetermine thickness if required
18	Taper roller bearing outer race	1		
19	Adjusting shim "S_2"	X	Record thickness for refitting	Redetermine thickness if required
20	Pan head screw	3		Tighten to 10 Nm (7 ftlb)

Printed in Germany – V, 1994

No.	Designation	Qty.	Note: Removal	Installation
21	Bracket	1		
22	Bearing cover	1		
23	Round seal	1		Replace
24	Shaft seal	1		Replace. Pack space between dust lip and sealing lip with grease (e.g. Shell 8420). Press in to depth of 2.0 ± 0.5 mm
25	Pan head screw	6		Tighten to 50 Nm (37 ftlb)
26	Drive pinionm with bearing assembly	1	To drive out, use a plastic hammer to apply light blows on the drive pinion head	Observe matching number, readjust if required
27	Adjusting shim "S_3"	X	Record thickness for reassembly	Redetermine thickness if required
28	Round seal	1		Replace, oil lightly
29	Breather	1		
30	Screw-in flange	2		Tighten to 35 Nm (26 ftlb)
31	Seal	2		Replace
32	Plug	2		Tighten to 25 Nm (18 ftlb)
33	Seal	2		Replace
34	Final drive	1		

Printed in Germany – V, 1994

Removal note

Mount rear transmission case with converter housing on assembly support.

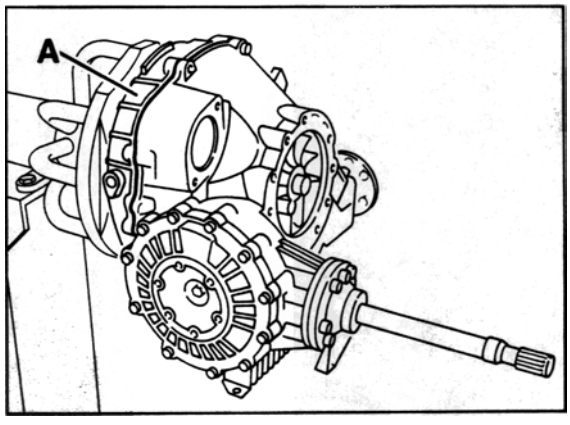

965-39

A - Converter housing (spare part)

Printed in Germany – V, 1994

39 09 37 Dismantling and assembling differential

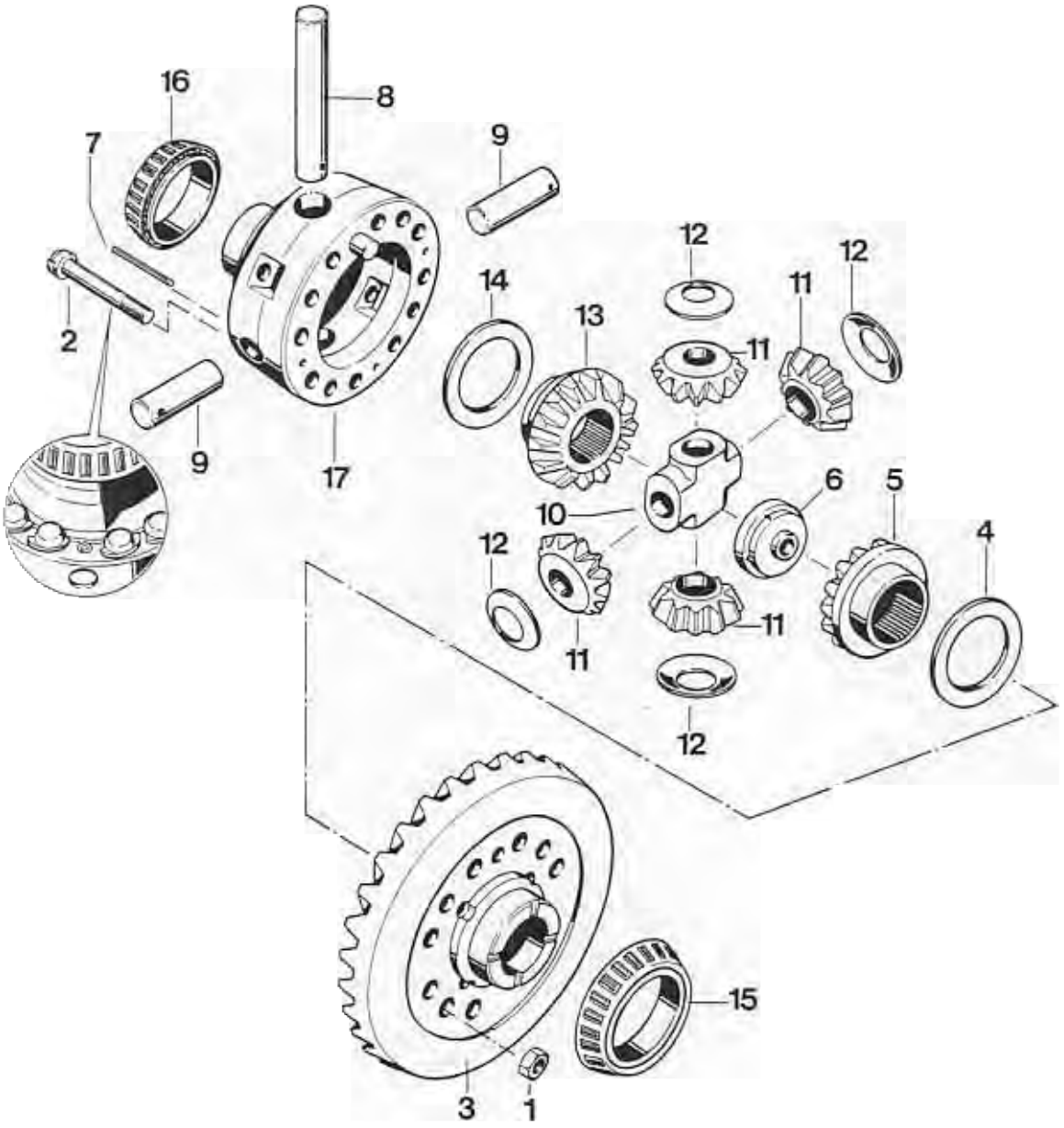

960-39

No.	Designation	Qty.	Note: Removal	Installation
1	Hexagon nut	12		replace. Thread must be dry and free from grease. Secure with Loctite 262. Tightening torque: 85 Nm (62.7 ftlb)
2	Lock screw	12		replace. Thread must be dry and free from grease. Install in correct position.
3	Ring gear	1	Separate from housing by applying light blows with a plastic hammer	Observe matching number. Readjust if required
4	Thrust washer	1		
5	Shaft bevel gear	1		
6	Nut	1		
7	Roll pin	3		Press in place in correct position
8	Stud (long)	1		Lock with roll pin
9	Stud (short)	2		Lock with roll pin
10	Cross fitting	1		
11	Bevel gear	4		
12	Thrust washer	4		
13	Shaft bevel gear	1		
14	Thrust washer	1		
15	Taper roller bearing inner race	1	Pull of with suitable puller, or remove ring gear and take out from inside through bores	Heat to approx. 120° C and press on
16	Taper roller bearing inner race	1	Pull off with P 263	Heat to approx. 120° C and press on
17	Housing	1		Fit centering pin with Loctite 262

Printed in Germany – V, 1994

39 30 19 Dismantling and assembling drive pinion

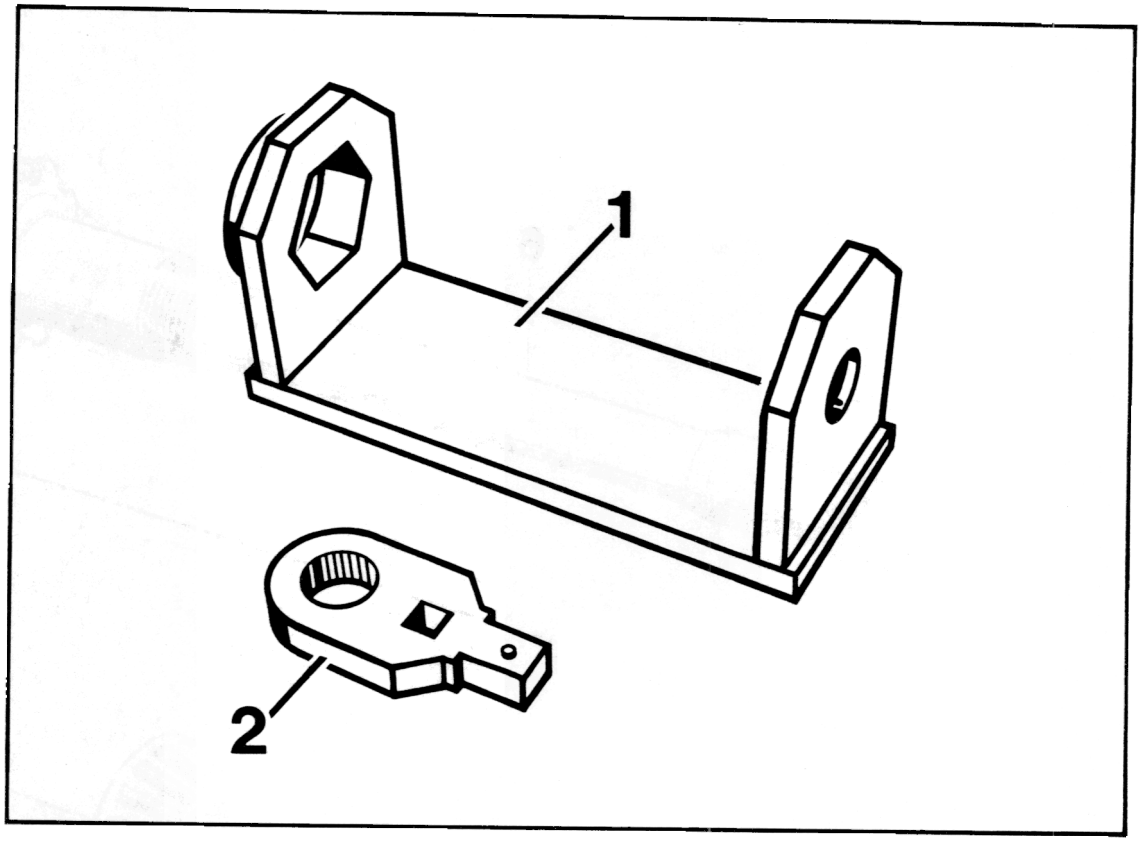

967-39

No.	Designation	Special tool	Order number	Explanation
1	Retainer bracket	9337	000.721.933.70	
2	Insert	9282	000.721.928.20	

Printed in Germany – V, 1994

39 30 19 Dismantling and assembling drive pinion

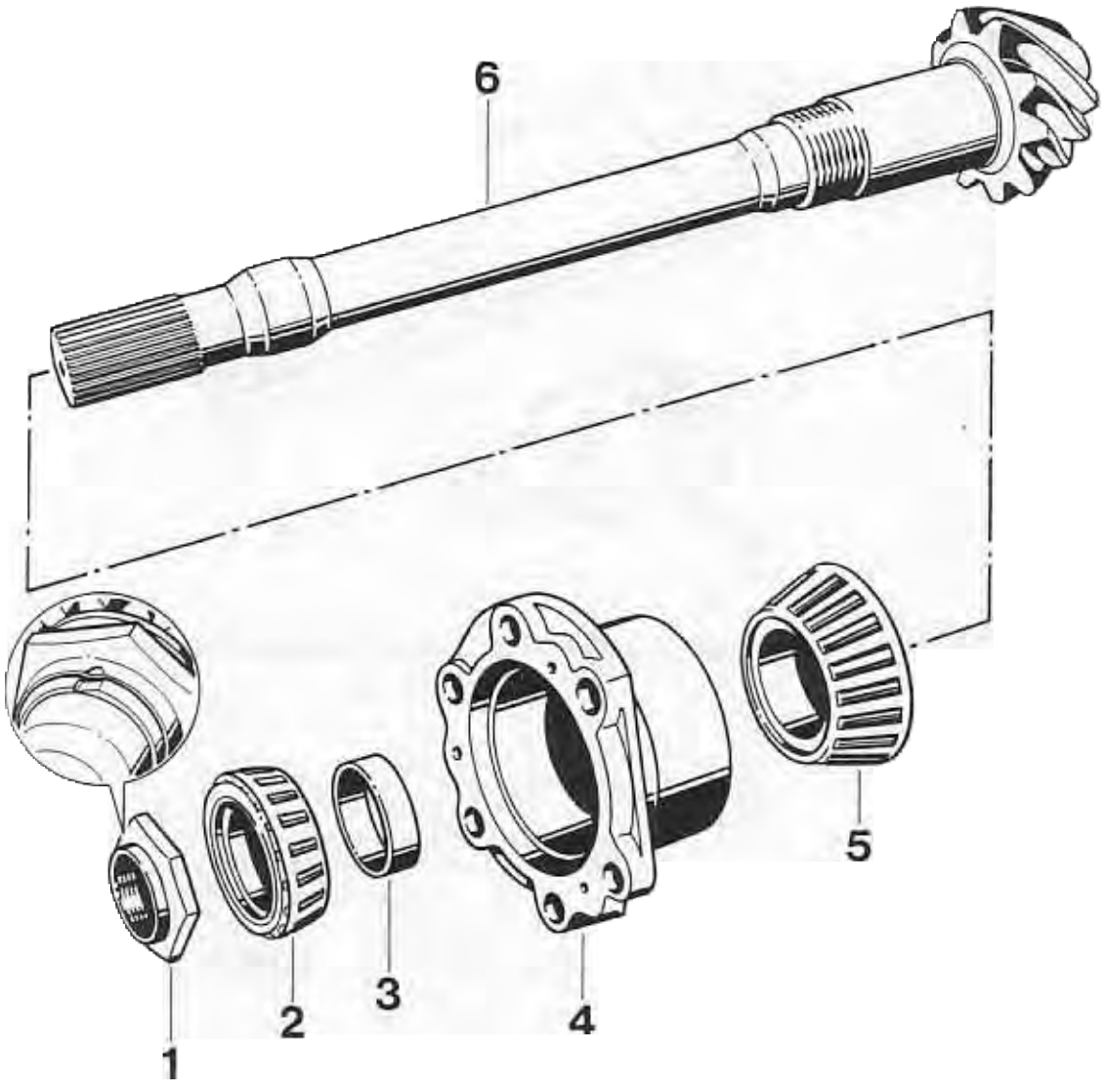

944-39

Printed in Germany – V, 1994

No.	Designation	Qty.	Note: Removal	Installation
1	Lock nut	1	Undo with Special Tool **9337** and **9282**	Tighten to 250 Nm (184 ftlb) and secure by upsetting the flange in two places
2	Taper roller bearing inner race	1	Press off with bearing flange	Heat to approx. 120° C and press on
3	Adjusting ring	X		
4	Bearing flange	1		Only available pread-justed as a complete spare assembly (items 2 to 5)
5	Taper roller bearing inner race	1	Press off with separating device	Heat to approx. 120 °C and press on
6	Drive pinion	1		Readjust if required, observe matching number

Printed in Germany – V, 1994

Notes on removal

Dismantling

Undo lock nut with Special Tools **9337** and **9282**.

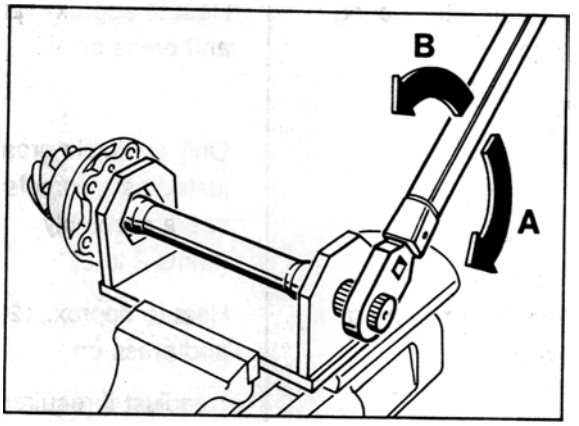

968-39

A - Undoing
B - Tightening

Printed in Germany – V, 1994

39 08 15 Adjusting drive set

Tools

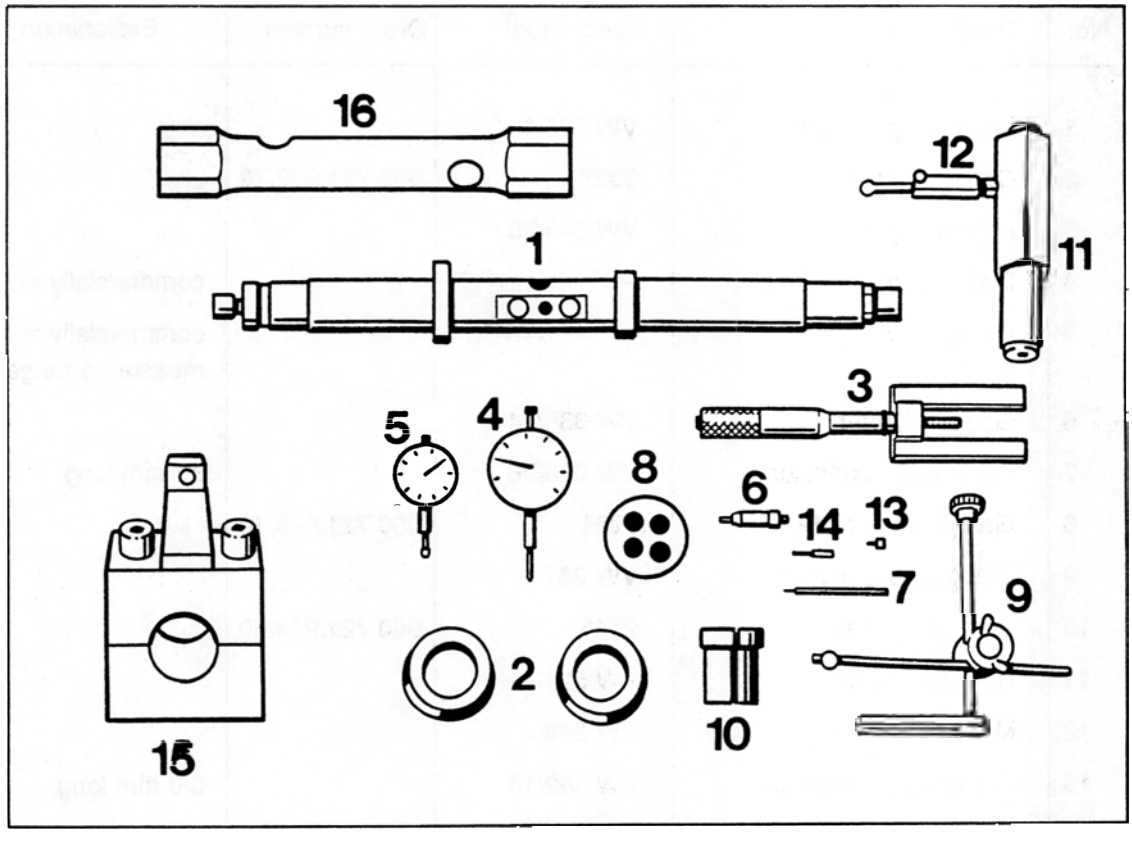

Printed in Germany – V, 1994

Adjusting drive set

Tools

No.	Designation	Special tool	Order number	Explanation
1	Measuring mandrel	VW 385/1		
2	Centering discs	9327	000.721.932.70	
3	Master gauge	VW 385/30		
4	Dial gauge	–		commercially available
5	Dial gauge	–		commercially available, measuring range 3mm
6	Gauge plunger	VW 385/14		
7	Dial gauge extension	VW 385/56		30 mm long
8	Gauge block plate	9281	000.721.928.10	
9	Dial gauge bracket	VW 387		
10	Clamping sleeve	9145	000.721.914.50	
11	Adjusting device	VW 521		
12	Measuring lever	VW 388		
13	Dial gauge extension	VW 382/10		6.0 mm long
14	Dial gauge extension	VW 385/53		14 mm long
15	Clamping device	9339	000.721.933.90	
16	Socket wrench (24 mm A/F)	–		commercially available (e.g. Stahlwille No. 10 750)

Printed in Germany – V, 1994

Practical procedure when readjusting the drive set

If it becomes necessary to adjust drive pinion and ring gear, follow the below sequence to ensure an efficient working procedure:

1. Determine the total shim thickness "Stot" (S_1 plus S_2) for the specified preload on the taper roller bearings/differential.

2. Determine the thickness of shim "S_3".

3. Split the total shim thickness "Stot" into S_1 and S_2 so that the specified circumferential backlash is present between ring gear and drive pinion.

The aim of this adjustment is to restore the smoothest running position which has been achieved on test equipment in the production line.

To achieve correct results, greatest possible cleanliness for all assembly work and measuring procedures is essential.

When assembling the final drive assembly, it is only necessary to readjust drive pinion and ring gear or drive set if components have been replaced which have a direct influence on the adjustment. Refer to the following table to avoid unnecessary adjustment procedures!

Adjust: / Replaced component	Ring gear (S_1 + S_2)	Drive pinion (S_3)
Rear transmission case	x	x
Transmission side cover	x	
Bearing assembly for drive pinion	x	x
Drive set	x	x
Differential housing	x	
Taper roller bearing for differential	x	

Printed in Germany – V, 1994

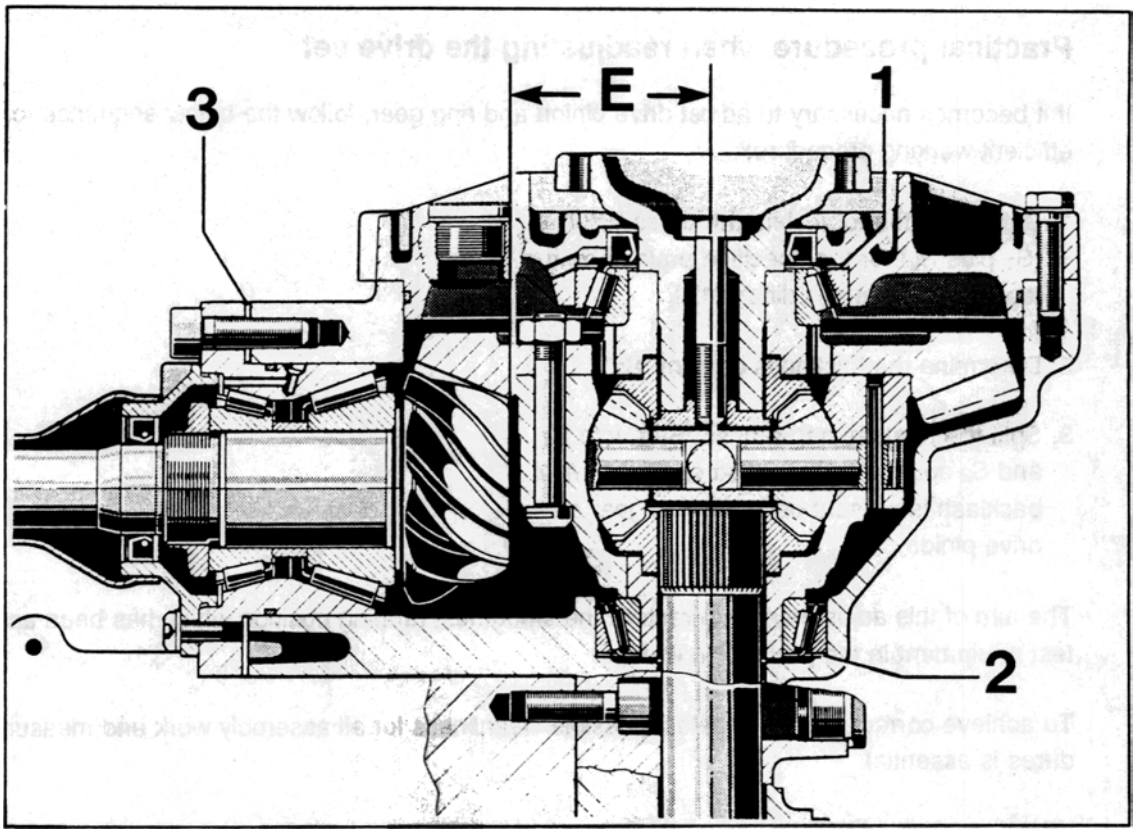

945-39

1 – Spacer S_1
2 – Spacer S_2
3 – Adjusting shim S_3
E – Adjustment dimension

Correct results can only be achieved if assembly work and measuring procedures are carried out carefully and with maximum cleanliness.

Adjusting drive set

General

The setting of drive pinion and ring gear is a determining factor for the service life and smooth running of the rear-axle drive. Drive pinions and ring gear that have been checked for good tooth contact pattern and low noise in both directions of rotation on special test equipment are therefore matched during production. The position at which smoothest running can be achieved is determined by shifting the drive pinion axially, with the ring gear being kept within the tolerance of the prescribed tooth backlash. The deviation "r" from the specified design dimension "Ro" is measured, added to the design dimension "Ro" and engraved on the ring gear as setting value "E".

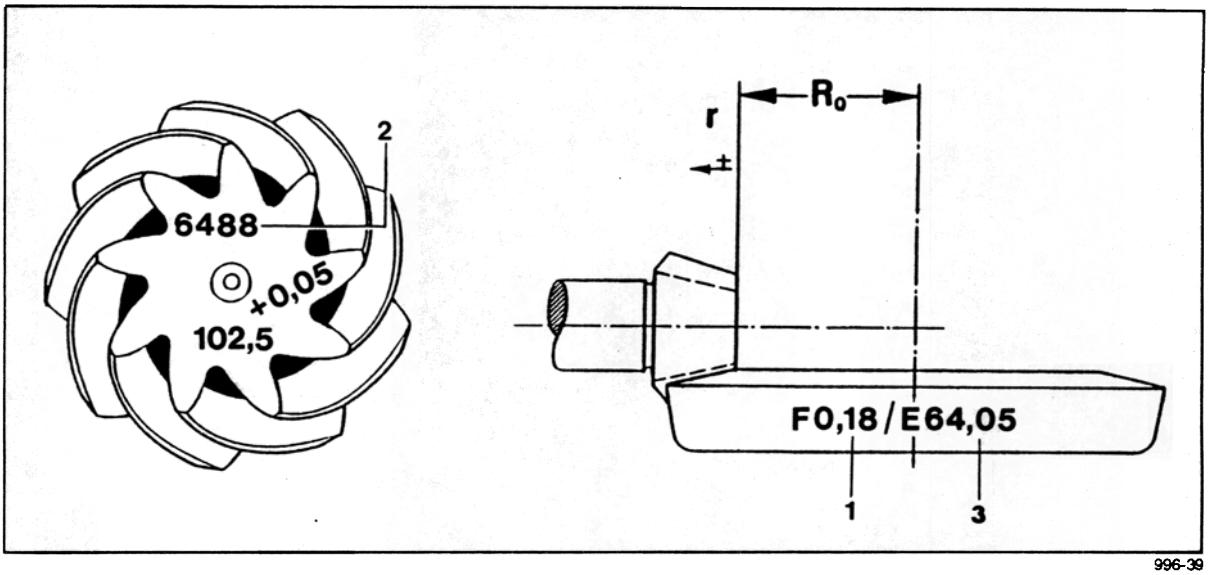

Ro - design dimension (64.00 mm)
r - deviation r
1 - Backlash "F" (e.g. 0.18 mm)
2 - Matching number
3 - Setting value "E" (Ro + r)

All other characters are used for adjustment in production.

Adjusting drive pinion

Note

The setting dimension "E" is indicated on the ring gear.

1. Install drive pinion **without** shims "S_3" and tighten all pan head screws of bearing assembly to 50 Nm (37 ftlb).

2. Rotate adjustable stop ring along with spindle towards measuring plunger as far as it will go and set second setting ring to dimension"a".

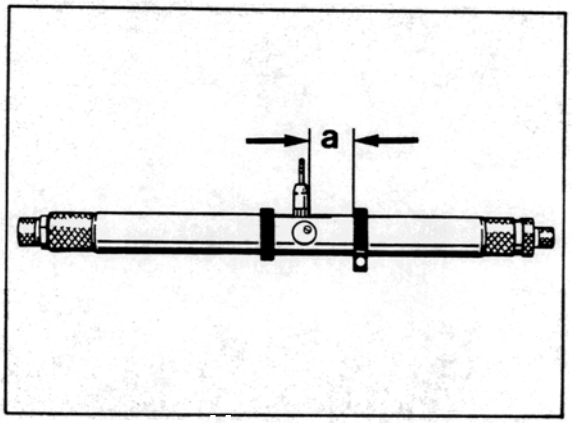

969-39

a = 30 mm

3. Assemble measuring mandrel and set with master gauge **VW 385/30** to setting dimension "E" (64.05 mm in the example).
Set dial gauge (3 mm measuring range) to zero with 1 mm preload.

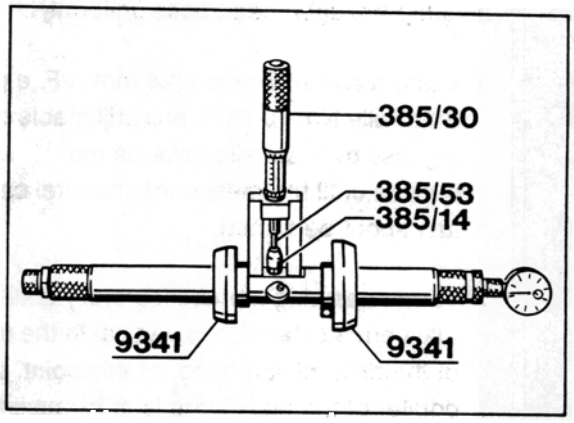

970-39

4. Put gauge block plate **9281** on drive pinion head and insert measuring mandrel with dial gauge towards transmission side cover into transmission case. Dial gauge extension points towards center of drive pinion.

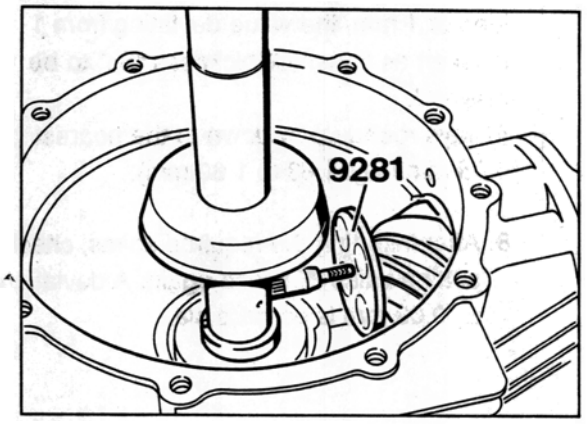

5. Fit transmission side cover without shaft seal and sealing ring and tighten crosswise with 4 hexagon head bolts.

Note

Do not use a hammer when fitting the transmission side cover (the gauge block plate held by magnets might fall off). Locate cover in correct installation position only by tightening the hexagon head bolts uniformly.

6. Using a socket wrench (24 mm A/F, e.g. Stahlwille No. 10 750), pull adjustable centering disc over spindle towards the outside until the measuring mandrel can just about be turned.

7. Turn measuring mandrel carefully until the dial gauge extension is vertical to the face of the drive pinion head. At this point, the pointer of the dial gauge is at its maximum deflection (reversing point) and the dial gauge must now be read.

Note

The measured value always deviates from the set dimension in clockwise direction (small pointer on the dial gauge is between 1 and 3), i.e. if the dial gauge is set with a preload of 1 mm, the value deviating from 1 is taken as the shim thickness "S_3" to be inserted.
Always round up or down to the nearest 0.05 mm (e.g. 1.63 to 1.60 mm).

8. After inserting the required shims, check the setting value "E" once again. A deviation of ± 0.03 mm is permissible.

Adjusting ring gear

Determining total shim thickness "Stot." ($S_1 + S_2$)

The ring gear must be readjusted if the transmission case, transmission side cover, taper roller bearing for differential, differential housing or drive set have been replaced.

Note

The drive pinion must be removed in order to determine the preload of the differential tapered roller bearings.

1. Remove adjusting shim "S_1" (in transmission side cover).

2. Adjusting shim "S_2" remains in the transmission case.

3. Make sure that the bearing outer races of the tapered roller bearings are well seated in the transmission case or in the transmission side cover.

4. Insert differential into transmission case and rotate several times.

5. Fit transmission side cover without seals and tighten all hexagon head bolts to **23 Nm (17 ftlb)**.

6. Place gauge block plate **9281** on the collar of the differential.

7. Fasten universal dial gauge holder **VW 387** with dial gauge and extension to the case and set to 0 with 2 mm preload.

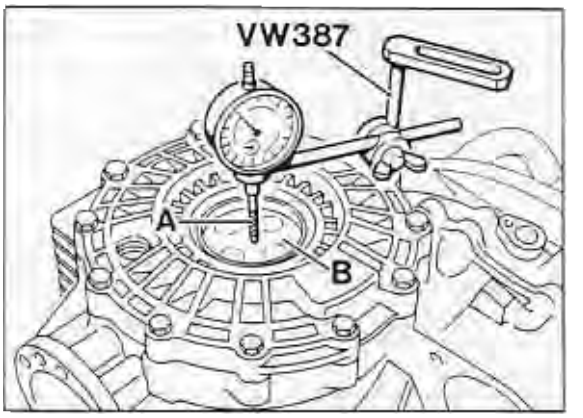

973-39

A - Dial gauge extension (approx. 30 mm long)
B - Gauge block plate 9281

8. Using a suitable tool, move differential up an down.
   Read off backlash on the dial gauge and note.

Note

Do not turn differential while measuring backlash as this will give an incorrect reading.

9. Remove adjusting shim "S_2" and determine thickness using a micrometer.

10. Calculate "Stot".
    "Stot." = Thickness of adjusting shim "S_2"
    + measured value
    + pressure fit of taper roller bearings

Example

Thickness of adj. shim "S_2"	1.70 mm
Measured value	0.91 mm
Press fit (constant value)	0.24 mm
"Stot"	2.85 mm

Printed in Germany – V, 1994

11. Spread calculated shim thickness "Stot" as follows.
    To start with the backlash adjustment, the thickness of adjusting shim "S_1" is reduced by 0.40 mm while the thickness of adjusting shim "S_2" is increased by 0.40 mm.

Example

Total shim thickness of adjusting shims

$S_1 + S_2 = 2.85$ mm

Thickness of adjusting shim "S_1"

$$\frac{2.85 \text{ mm}}{2} \qquad \begin{array}{r} 1.425 \text{ mm} \\ -\ 0.40 \text{ mm} \\ \hline 1.025 \text{ mm} \end{array}$$

Thickness of adjusting shim "S_2"

$$\frac{2.85 \text{ mm}}{2} = \begin{array}{r} 1.425 \text{ mm} \\ +\ 0.40 \text{ mm} \\ \hline 1.825 \text{ mm} \end{array}$$

Note

The adjusting shims are avail. in thickneses of 1.0...2.0 mm in increments of 0.05 mm.

The shim tichknesses calculated must be rounded up or down for plausible dimensions that will not alter the total shim thickness S_1 and S_2.

Example

Calculated shim thickness

$S_1 + S_2 = 1.025 + 1.825 = 2.85$ mm

Rounded down shim thickness

$S_1 + S_2 = 1.00 + 1.85 = 2.85$ mm

Adjusting circumferential backlash

Note

The backlash to be set is embossed on the ring gear.

1. Drive pinion set using the shims "S_3" determined while adjusting the drive pinion and tighten all mounting screws to 50 Nm (37 ftlb).

Note

Make sure the collar nut of the drive pinion is tightened to 250 Nm (184 ftlb).

2. Fit the adjusting shims (S_1 + S_2) determined into the transmission case and the transmission side cover, respectively.

3. Fit differential and transmission side cover and tighten all hexagon head bolts of the cover to 23 Nm (17 ftlb).

Note

Always make sure that there is a certain amount of backlash when tightening the hex bolts. Never allow the drive pinion to bind.

4. Assemble measuring lever **VW 388** and adjusting device **VW 521/4** and adjust lever length to 80 mm with the plunger. Refer to dimension "a" in the picture.

5. Insert adjusting device with clamping sleeve (Special Tool 9145) into the differential and clamp firmly.

6. Rotate differential in both directions several times to settle the tapered roller bearings.

7. Fit universal dial gauge holder with flat extension in such a way as to produce a right angle between dial gauge axis and lever.

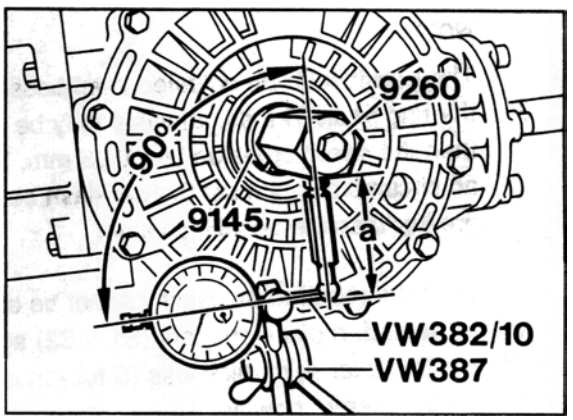

972-39

Dimension "a" = approx. 80 mm

8. Turn ring gear carefully at the clamping screw of the adjusting device up to the stop and set the dial gauge to zero. Turn back ring gear and read off circumferential backlash. Note the reading.

Note

When carrying out measurements, the drive pinion must be blocked with Special Tool **9339**.

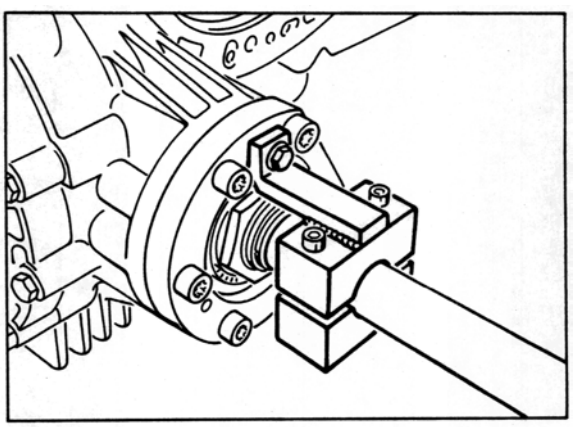

1129-39

Printed in Germany – V, 1994

9. After turning the ring gear a further 90° each, repeat measuring procedures three times. The measured values must not deviate from one another by more than 0.05 mm.

Note

The backlash to be adjusted is embossed on the ring gear. The actual value may be less than the specified value by - 0.05 mm. Under no circumstances must the backlash be greater than the specified value.

10. If the required backlash cannot be obtained, replace spacers (S1 + S2) again. The total shim thickness (S tot.) must not be altered, however.

Note

Changing the shim thickness of "S1" or "S2" by 0.05 mm shim results in a change of backlash by approx. 0.1 mm.

Printed in Germany – V. 1994

Repair Manual

911 Carrera
(993)

Volume IV:
Chassis

Dr. Ing. h.c. F. Porsche Aktiengesellschaft

Volume I:	**Overall vehicle – General**	**0**
General	Maintenance, diagnosis	03
Engine		
	Engine	**1**
	Engine – Crankcase, mounting	10
	Engine – Crankshaft, pistons	13
	Engine – Cylinder head, valve drive	15
	Engine – Lubrication	17
	Engine – Cooling	19
	Fuel, exhaust system, engine electrical system	**2**
	Fuel supply, control	20
	Exhaust system – Turbocharging	21
	Fuel system, electronic injection	24
	Fuel system, K-Jetronic	25
	Exhaust system	26
	Starter, power supply, GRA	27
	Ignition system	28
Volume II:	**Transmission**	**3**
Transmission	Clutch, control	30
Manual transmission	Manual transmission – Controls, case	34
	Manual transmission – Gears, shafts, inner operation	35
	Final drive, differential, differential lock	39
Volume III:	**Transmission**	**3**
Transmission	Automatic transmission – Torque converter	32
Automatic	Automatic transmission – Controls, case	37
transmission	Automatic transmission – Gears, control	38
	Final drive, differential, differential lock	39
Volume IV:	**Chassis**	**4**
Chassis	Front wheel suspension, drive shaft	40
	Rear wheel suspension, drive shaft	42
	Wheels, tires, alignment	44
	Anti-Lock System (ABS)	45
	Brakes – Mechanical	46
	Brakes – Hydraulics, regulator, booster	47
	Steering	48

Volume V:	**Body**	**5**
Body	Body front section	50
	Body center section, roof, frame	51
	Body rear section	53
	Hoods, lids	55
	Front doors, Central Locking System	57
	Exterior body equipment	**6**
	Sunroof	60
	Soft top, hardtop	61
	Bumpers	63
	Glasses, window control	64
	Exterior equipment	66
	Interior equipment, passenger protection	68
	Interior body equipment	**7**
	Trim, insulation	70
	Seat frames	72
	Seat upholstery, covers	74

Volume VI:	**Air conditioning**	**8**
Air conditioning	Heater	80
Vehicle electrics	Ventilation	85
	Air conditioning	87
	Auxiliary air conditioning system	88
	Electrical system	**9**
	Instruments, alarm	90
	Radio, telephone, on-board computer	91
	Windshield wipers and washer	92
	Exterior lights, lamps, switches	94
	Interior lights, lamps, switches	96

Volume VII:	**Electrical system**	**9**
Wiring diagrams	Wiring	97

Volume VIII:	**Diagnosis**	**D**
Diagnosis	Self-diagnosis	03
	DME Diagnosis	24
	Tiptronic Diagnosis	37
	PDAS Diagnosis	39
	ABS Diagnosis	45
	Airbag Diagnosis	68
	Heater Diagnosis	80
	Alarm Diagnosis	90

Preface

Structure

The "Technical Literture" for the "911 Carrera (993)" model is basically structured as before, i.e. the structure follows the familiar repair groups.

A new feature is that the structure includes the main groups **0 to 9** and the main group **D**.

Main groups:	0	Complete vehicle – General
	1	Engine
	2	Fuel, exhaust, engine electrical system
	3	Transmission
	4	Chassis
	5	Body
	6	Body equipment, outside
	7	Body equipment, interior
	8	Air conditioning
	9	Electrical system
	D	Diagnosis

Layout

The layout in the below items remains unchanged throughout the repair manual

1. Table of tightening torques
2. Special tools required
3. Exploded views
4. Legends for the exploded views
5. Assembly notes / use of special tools

As a new feature, however, the former item 6 (Repair group diagnosis) is no longer filed in the volume corresponding to the respective repair group. The **Diagnosis test plans / diagnosis procedures** have been combined in a **separate Diagnosis volume** broken down according to the main groups 0 to 9.

Another new feature is that the contents of the "Service Information Technik" are indicated in the Repair Manual. This brochure concentrates on a description of the design and function of components and of the new features introduced for a particular model year.

Service Number

All major repair procedures and repair descriptions are identified by a two- or four-digit **Service Number** completed by two additional digits to identify the work that corresponds to the first six digits of the working position number in the Working Times and Damage Catalog.

Example: 30 37 37 Dismantling and assembling clutch control shaft

Explanation: **30** **37** **37** 50 (full working position number)

Repair group
here: Clutch, control

Component designation
here: Clutch control shaft

Activity
here: Dismantling and assembling

Index
here: Removed

Presentation in the various documents

30 37 37 50	Working position no. from **Working Times and Damage Catalog**, consisting of repair group, component designation, activity and index
30 37 37	Six-digit number in **Repair Manual**, consisting of repair group, component designation and activity
30 37	Service number in **Service Information**, consisting of repair group and component designation

Goal

The introduction of a service number in the "technical literature" is intended to facilitate standardization and positive identification to allow direct cross-referencing among the various documents. This is of particular importance with regard to the use of electronic media.

IV Chassis

The Repair Manual of the 911 Carrera (993) also includes the 911 Carrera 4 manual (993 four-wheel drive). The 911 Carrera (993) is the basic model covered by the repair operations described in this Manual. "911 Carrera (993)" is also indicated in the header of each page.

Descriptions of repair operations that deviate for the 911 Carrera 4 will be included after the respective 911 Carrera section. The repair descriptions of both models are separated by a cover page. All pages included after the cover page (separation sheet) have the "911 Carrera 4" heading. To facilitate distinction, the page numbering will start with 100.

4 Chassis

4	Chassis-overview 911 Carrera RS	4 - 1
4	Notes for Carrera RS repair instructions	4 - 7
4	Notes for Carrera RS repair instructions	4 - 9
4	Stabilizer allocation	4 - 11

40 Front Wheel Suspension, Drive Shaft

40	Tightening torques for front axle	40 - 1
40 05 37	Dismantling and assembling suspension	40 - 5
40 88 10	Replacing spring strut mount seals	40 - 15
40 85 19	Removing and installing front spring strut	40 - 19
40	Dismantling and assembling front spring strut	40 - 21
40	Carrera RS - Disassembling and assembling spring strut, front	40 - 23

42 Rear Wheel Suspension, Drive Shaft

42	Tightening torques for rear axle	42 - 1
42 03 37	Dismantling and assembling suspension	42 - 3
42 21 19	Removing and installing drive shaft (manual transmission)	42 - 15
42 21 19	Removing and installing drive shaft (vehicles with Tiptronic)	42 - 17
42 71 19	Removing and installing rear spring strut	42 - 21
42	Dismantling and assembling rear spring strut	42 - 23
42	Carrera RS - Disassembling and assembling spring strut, rear	42 - 31

Printed in Germany - 16, 1996

44	**Wheels, Tires, Alignment**	
44	Wheels and tires	44 - 1
44	Suspension alignment settings	44 - 3
44	Measuring card	44 - 6
44	Alignment of complete suspension	44 - 7
44	Wheel alignments measurements on 911 Carrera RS	44 - 19
44	Checking wheel rims	44 - 21
44	General tire fitting instructions	44 - 23
44	Technology wheel / Turbo-Look Design wheel	44 - 25
44	Tire fitting using conventional machines	44 - 29
45	**Antiblock System (ABS)**	
45	Important information on ABS 5 and ABS 5 / ABD	45 - 1
45	Location of ABS 5 and ABS 5 / ABD components	45 - 5
45	ABS 5 test with System Tester 9288	45 - 7
45 11 19	Removing and installing front speed sensor	45 - 11
45 15 19	Removing and installing rear speed sensor	45 - 13
46	**Brakes, Mechanical**	
46	Tightening torques for mechanical brake system	46 - 1
46	Technical data	46 - 3
46	Technical data Carrera RS	46 - 4a
46	Checking thickness of brake pads	46 - 5
46 36 20	Removing and installing front brake pads	46 - 7
46 38 20	Removing and installing rear brake pads	46 - 9
46 11 15	Adjusting brake pushrod	46 - 11
46 83 16	Adjusting parking brake shoes	46 - 13
46 50 04	Measuring front brake disc lateral runout	46 - 15
46 53 04	Measuring rear brake disc lateral runout	46 - 19
46 50 02	Checking front brake discs (wear assessment)	46 - 21
46 53 02	Checking rear brake discs (wear assessment)	46 - 25
46 50 19	Removing and installing front brake disc	46 - 27
46 53 19	Removing and installing rear brake disc	46 - 29
46 83 20	Removing and installing parking brake shoes	46 - 31

Printed in Germany - 16, 1996

47	**Brake, Hydraulics, Regulator, Booster**	
47	Tightening torques for brake hydraulics	47 - 1
47	Notes on four-piston fixed caliper	47 - 3
47 01 07	Bleeding the brakes (vacuum brake booster)	47 - 5
47 08 55	Changing brake fluid (vacuum brake booster)	47 - 9
47 01 07	Bleeding the brakes (hydraulic brake booster)	47 - 11
47 08 55	Changing the brake fluid (hydraulic brake booster)	47 - 19
47 01 01	Pressure test on brake booster circuit	47 - 21
47 66 19	Removing and installing pressure warning switch	47 - 25
47 90 19	Removing and installing relay for hydraulic pump	47 - 29
48	**Steering**	
48	Tightening torques for steering	48 - 1
48	Checking and assembly operations on the power steering system	48 - 3
48 10 19	Removing and installing steering wheel (airbag)	48 - 5
48 10 19	Removing and installing Carrera RS steering wheel (Momo)	48 - 6a
48	Replacing the steering in case of accident damage	48 - 7
48 90 19	Removing and installing power steering gear	48 - 9

Printed in Germany - 15, 1995

Survey of contents of Service Information Technik '95

The Service Information gives a detailed description of the technical features of the new 911 Carrera.

	Rep. Gr.	Page
Engine		
General		1 - 1
Engine cross-sections	10	1 - 4
Full-load curve		1 - 6
Belt pulley	13	1 - 8
Pistons	13	1 - 10
Hydraulic valve lash adjuster	15	1 - 16
Setting the timing	15	1 - 18
USA - auxiliary air pump		1 - 19
Fuel and ignition systems		
General		2 - 1
DME - Schematic	24	2 - 2
Fuel - air flow	24	2 - 3
Exhaust gas flow	26	2 - 5
DME control unit 2.10.1	24	2 - 9
Mass air flow sensor	24	2 - 12
Throttle potentiometer	24	2 - 18
Ignition system	28	2 - 24
Plausibility test		2 - 28
Diagnosis		2 - 29
Auxiliary air pump	26	2 - 33
Power transmission		
Transmission	30	3 - 1
Clutch	30	3 - 2
Manual transmission	34	3 - 3
Transmission ratios		3 - 6
Gear set	35	3 - 8
Synchromesh	35	3 - 9
Final drive	39	3 - 13
Oil supply		3 - 15
Porsche Tiptronic	37	3 - 16
Modifications for the '95 model year		3 - 17

	Rep. Gr.	Page
Running gear		
General		4 - 1
Front axle	40	4 - 2
Steering	48	4 - 7
Rear axle	42	4 - 8
Elasto-kinematic toe correction	42	4 - 12
Coil springs (layout)	42	4 - 13
Wheels, tires	44	4 - 15
Suspension alignment	44	4 - 17
Brakes	47	4 - 20
Bleeding the brakes	47	4 - 23
ABS 5	45	4 - 24
Operation of the ABD	45	4 - 30
Diagnosis ABS/ABD	45	4 - 34
Body		
General		5 - 1
Constructional dimensions	50	5 - 4
Aerodynamics and air ducting	50	5 - 8
Body equipment		
Body equipment		6 - 1
Color scheme as of 1995 model year	60	6 - 1
Windows	64	6 - 8
Airbag system	68	6 - 14
Body - interior trim		
Body - interior trim	70	7 - 1
Seats	72	7 - 5
Heating, air conditioning, ventilation		
Particle filter	85	8 - 1
Air ducting	80	8 - 3
Heating - air conditioning unit	85	8 - 5
Heating - air conditioning unit	87	8 - 6
Series resistor of rear blower	80	8 - 9

Electrical system

	Rep. Gr.	Page
Instruments	90	9 - 1
Alarm system/central locking system	90	9 - 3
Heated rear window	64	9 - 6
Central Information System (Z I)	91	9 - 7
Radio "Alpine 7807"	91	9 - 10
Sound package, DSP-System	91	
Windshield wiper and washer system	92	
Headlights	94	
Front end light cluster	94	
Tail lights	94	
Engine compartment baseplate	97	
Wiring diagram		

Summary

Maintenance	0 - 1
Number ranges	0 - 4
Technical data	0 - 5

4 Chassis- overview 911 Carrera RS

General

The 911 Carrera RS (993) is produced in a **basic version** (M002) and a **Clubsport version** (M003)

Both versions (M 002 and M 003) are lower than the 911 Carrera.

The 911 Carrera RS (M 002 and M 003) can be recognized by additional spoilers at the front and a fixed rear spoiler.
The M 002 and M 003 are fitted with **rear spoilers** of different types and sizes.
The **basic version M 002** (upper vehicle) is equipped with a small fixed spoiler.
The **Clubsport version M 003** (lower vehicle) has a large fixed spoiler with an adjustable wing. In addition, the Clubsport version is fitted with a welded rollover cage.
Caution: The wing is set to the lowest (horizontal) position for road use. Adjustment of the wing to individual driving styles is only possible for racing use.
On public roads, the wing **must** be set to the lowest position.

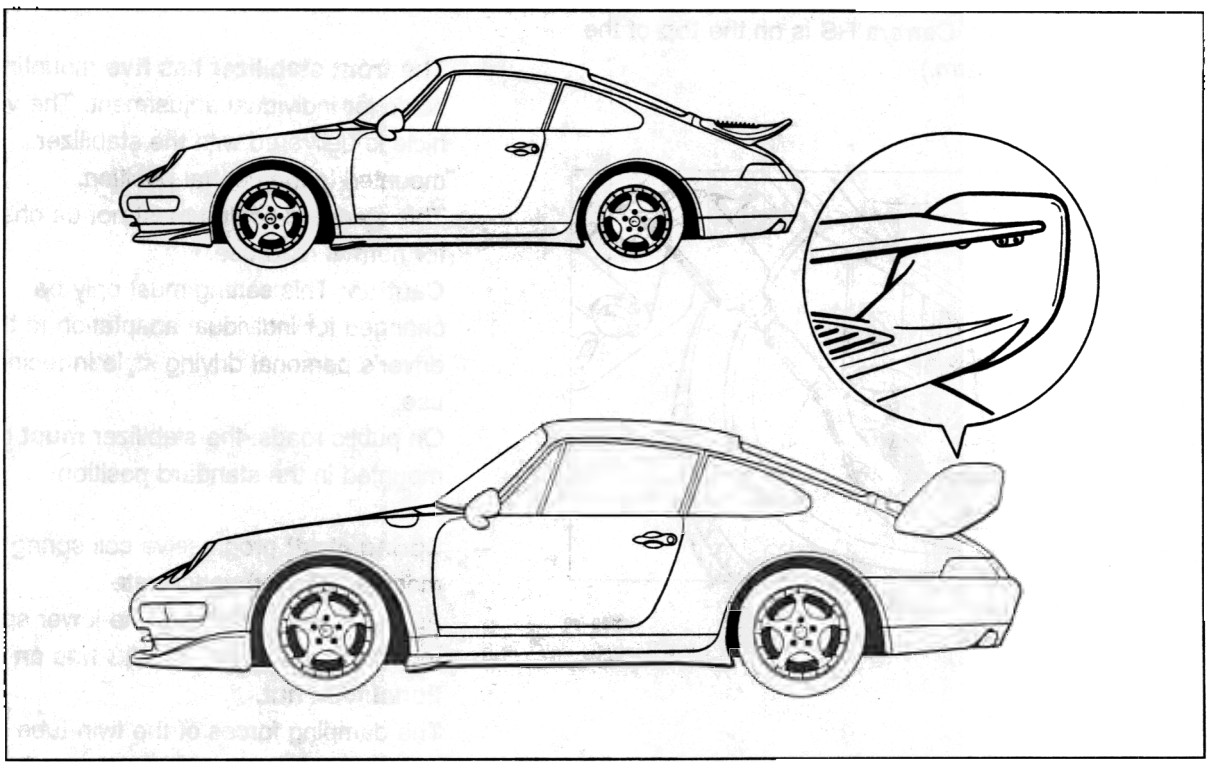

Chassis overview (M 002 / M 003)

The running gear of the Carrera RS (993) is based on that of the 911 Carrera. Only the changes which have been made are listed below.

Front axle / steering

Modified wheel carrier no. 1
(lower mounts for control arm and tie rod).

Tie rod no. 2. with less curvature.
The tie rod ball joint is mounted on the wheel carrier the other way round (on the Carrera, the fastening nut is on the **bottom** of the steering arm. The fastening nut on the Carrera RS is on the **top** of the steering arm.)

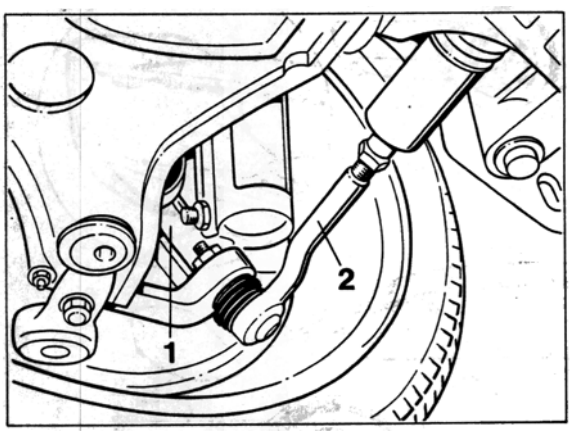

2189 -40

Power steering gear with modified ratio.
Carrera (993) = 16.48 : 1 (left hand drive)
Carrera RS = 18.25 : 1 (left hand drive)
A connecting brace is installed between the steering mounting points.
Caution: For assembly work, you must take account of the changed position of the steering gear mounting screws in connection with the connecting brace.

Steering wheel: three-spoke steering wheel without airbag, diameter 360 mm (Momo).
The airbag steering wheel with a diameter of 380 mm is available as an option.

Control arms with harder rubber metal mounts.

The front stabilizer has **five** mounting holes for individual adjustment. The vehicle is delivered with the stabilizer mounted in the central position.
This standard setting must not be changed for normal road use.
Caution: This setting must only be changed for individual adaptation to the driver's personal driving style in racing use.
On public roads. the stabilizer **must** be mounted in the standard position.

Spring strut: progressive coil spring with modified (higher) spring rate.
As with the 911 Carrera, the lower spring mount is adjustable. **The RS has an additional lock nut.**
The damping forces of the twin-tube shock absorber are lower than on the earlier Carrera RS (964) (more comfortable ride).

The spring strut mount has a Unibal joint. This can be used to set the camber from the normal value to a racing setting. For adjustment, there are two slots (arrows) in the upper part and three bolts (no. 1) in the lower part of the mount.
The increase in camber if the slots are used is about - 1° 30'. Fine adjustment by about ± 20' is possible by moving the joint in the slots.
Caution: The racing setting must be used only for racing.
For use on public roads, the camber **must** be set to the standard position.

Note

The suspension brace shown is standard equipment on the Clubsport version (M 003). It is also available as an option for the basic version (M 002).

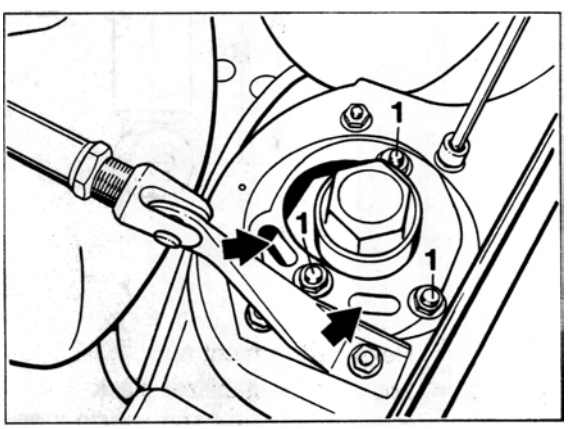

2187/1 -40

Rear axle

To obtain greater camber (up to - 3°30') for motorsports use, the slot in the **rear axle side part** near to the camber arm is longer.
The stroke of the camber eccentric is **2 mm longer** to provide a greater adjustment range.
The **rubber metal mounts** (subframe mounts) on the side parts are harder.

The rubber metal mounts for arms 5 (lower A-arm) and 4 (caster arm) are also harder than on the standard vehicle.

The stabilizer, diameter 20 mm, has **three adjustment positions**. The vehicle is delivered with the stabilizer in the central position (arrow).
The stabilizer position must not be changed for normal road use.
Caution: The stabilizer position must only be changed for racing use.
For use on public roads, the stabilizer **must** be set to the standard position.

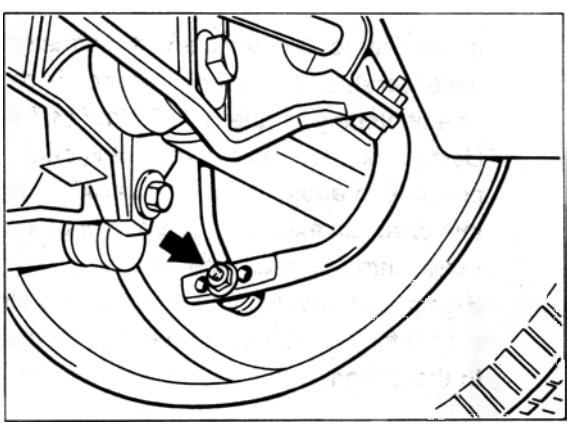

2192 - 42

The spring strut mount is equipped with a Unibal joint.

The rear axle spring strut is equipped with a threaded sleeve and an adjustment nut (no. 1) for height adjustments.
In addition, the stabilizer block (no. 3) (support for stabilizer mount) is attached to the thread. The height of the stabilizer block is adjustable and it is equipped with a lock nut (no. 2).
The stabilizer block must only be adjusted for racing purposes. The purpose of adjustment is to ensure that sufficient space is still available for the stabilizer mount if the vehicle height is changed (only for racing) and that the stabilizer mount can be installed without stress.
With the vehicle height specified for road use (see page 44 - 3), the stabilizer block **does not need to be adjusted.**
The stabilizer block is also correctly **adjusted** for replacement shock absorbers (dimensions B and C).

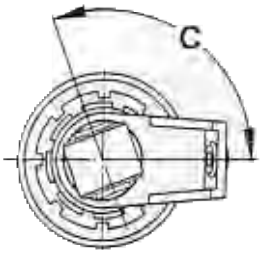

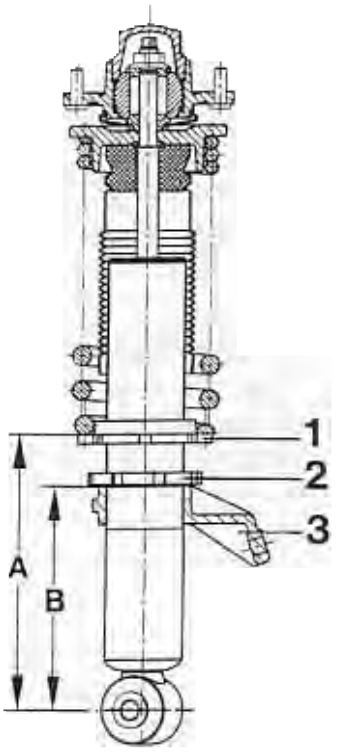

2197 - 42

1 = Height adjustment nut
2 = Lock nut for stabilizer block (tightening torque 100 Nm/73.7 ftlb)
3 = Stabilizer block

Dimension **A** = Pre-setting for production (182 ± 1 mm). For the specified vehicle height, the actual dimension may be different. If the shock absorber is replaced, the actual dimension must be transferred to the new part.

Dimension **B** = 147.5 ± 0.5 mm
Dimension **C** = 110.5 degrees

Note

If lock nut no. 2 is unscrewed (normally not necessary), a normal hook wrench is required. The tightening torque is 100 Nm (73.7 ftlb). Using a normal hook wrench, it is only possible to apply about 50 Nm (36.9 ftlb). In this case, an extension (tube) must be inserted into the hook wrench.
Higher torque values up to about 200 Nm (147.5 ftlb) will cause no damage whatsoever to the thread.

The 911 Carrera RS has the **drive shaft** of the 911 Turbo. In addition, there is a lock nut on the wheel (arrow).

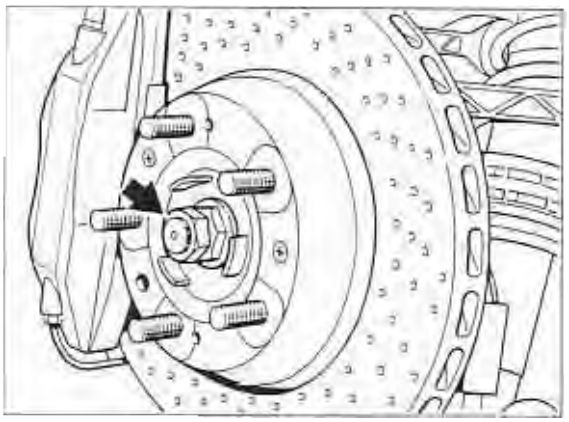

2194 - 42

Wheels and tires

The 911 Carrera RS is fitted with **three-part 18-inch wheels** (for summer tires only). For winter tires, 17-inch wheels must be used.
For tire pressures, see page 44 - 1.

Wheel alignment

The settings and adjustment procedures for front and rear axles are different in some respects from those for the 911 Carrera (993).
For settings, see pages 44 - 3 to 44 - 5.
For alignment measurements on the 911 Carrera RS, see page 44 - 19 / 44 - 20.

Brakes - general

The RS is equipped with dual-circuit brakes (front/rear axle split) **with a hydraulic brake booster**. ABS and the dynamic limited-slip differential system (**with ABD and limited-slip differential)** are standard equipment.

Front wheel brakes

With the exception of the brake disk, the brakes from the 911 Turbo (993) are fitted (perforated brake disk, red four-piston light alloy brake caliper, brake pads with wear warning contacts on both sides).
In contrast to the 911 Turbo, **a single-part brake disk** is fitted.

Rear wheel brakes

With the exception of the brake calipers, the brakes of the 911 Turbo (993) are used (perforated brake disk, red four-piston light alloy caliper, brake pads with wear warning contacts on both sides).
The four piston light alloy brake calipers have pistons with diameters of 2 x 36 mm and 2 x 30 mm (911 Turbo diameter 4 x 28 mm).

Proportioning valve

The reduce the brake pressure at the rear axle and to adapt the brake pressure to wheel load distribution, two proportioning valves (for left and right brake) are installed.
Switchover pressure 40 bar
Reduction factor 0.46
(Marking 5 ↓ 40).

Brake booster / hydraulic pump

As with the 911 Carrera 4 and the 911 Turbo, an electro-hydraulic brake booster system is used.
Caution: boost coefficient 3.6 : 1.
Carrera 4 and 911 Turbo (993) 4.8 :1.

4 Notes for Carrera RS repair instructions

General

The repair, adjustment and assembly descriptions given in the repair manual for the 911 Carrera (993, rear-wheel drive) also form the basis for repair work on the 911 Carrera RS. Only repair procedures which are different for the Carrera RS are specifically described in this Repair Manual.

Note on torque specification values

Most of the tightening torque values for the 911 Carrera also apply to the 911 Carrera RS.
Differences in torque values and additional torque specifications are given in the tables of the appropriate repair groups for the 911 Carrera (993, rear-wheel drive).

Assembly work on front spring strut

Do not loosen the cap of the spring strut mount (arrow) when the vehicle is standing on its wheels.

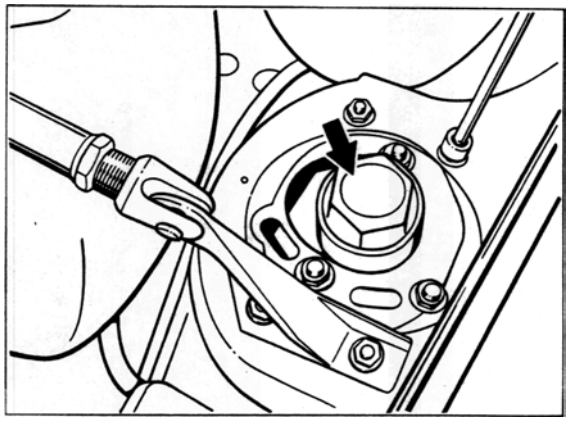

2187/2 - 40

Assembly work on rear spring strut

Do not loosen the cap of the spring strut mount when the vehicle is standing on its wheels.

Adjustment work on rear spring strut

To adjust the height of the vehicle, you need a normal hook wrench.
To adjust the height, turn the adjustment nut (arrow).
If the height is set to the value specified for road use (page 44 - 3), the stabilizer block does not need to be adjusted.
The stabilizer block is also correctly set for replacement shock absorbers. For further details, see page 4 - 4.

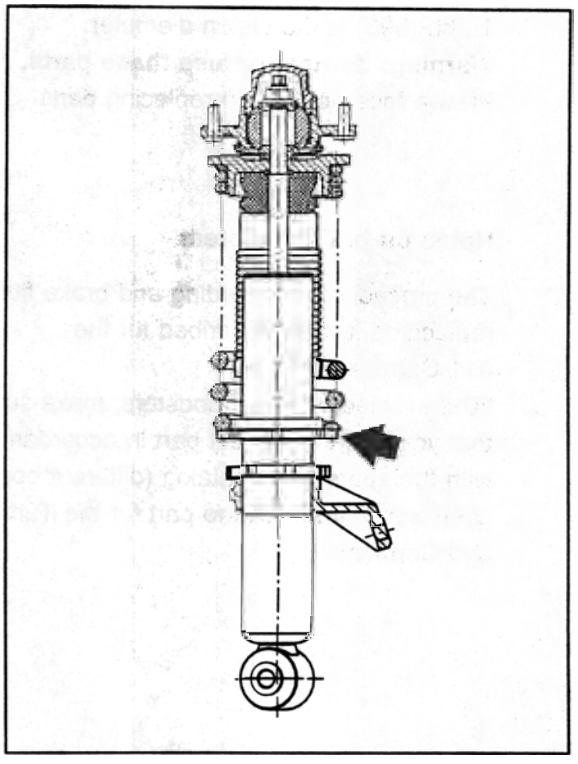

2197 /1 - 42

Printed in Germany - 12, 1995

Notes on removal of drive shaft

When pressing the **drive shaft** out of the wheel hub, place a disk between the drive shaft and the extractor to prevent damage to the vent pipe.

Notes on wheel alignment

The settings and adjustment procedures for front and rear axles are different in some respects from those for the 911 Carrera (993).
For settings, see pages 44 - 3 to 44 - 5.
For alignment measurements on the 911 Carrera RS, see page 44 - 19 / 44 - 20.

Notes on rear brakes

The only difference between the rear wheel brake calipers of the Carrera RS and the 911 Turbo (993) is the piston diameter.
Warning: do not confuse these parts.
Please take note when replacing parts.

Notes on brake boosters

The procedure for bleeding and brake fluid replacement is as described for the 911 Carrera (993).
When replacing brake boosters, make sure that you use the correct part in accordance with the spare parts catalog (different boost coefficient) **and not** the part for the Turbo and Carrera 4).

Notes on steering

Modified tie rod.
Modified steering gear ratio.
Carrera RS = 18.25 : 1 (left-hand drive)
Carrera (993) = 16.48 : 1 (left-hand drive).
When replacing parts use the correct part in accordance with the spare parts catalog.

4 Checks / notes for Carrera RS

Note

The inspection instructions and notes apply both to the basic version M 002 and to the Clubsport version M 003.

Platform lifts / test rigs

When driving onto platform lifts and wheel alignment platforms, make sure that there is sufficient ground clearance for the spoilers and sill trims.

Wheel alignment systems

The vehicle can only be driven onto wheel alignment platforms if additional ramps are used.
For example, 959 drive-on ramps are suitable. Platforms without inclination should not be used. For wheel alignment measurements on the 911 Carrera RS, see pages 44 - 19 and 44 - 20.

Notes on brake testing

Drive very carefully onto the **brake tester**, especially as the springs are compressed. This should prevent "grounding" to a large extent. Depending on the design of the brake tester, the elastic rubber lip of the front spoiler may gently make contact with the ground as the front axle enters the tester. The spoiler will immediately resume its normal position and no damage will be caused.
The spoilers for brake ventilation should still have a clearance of a few millimeters.
There are no problems with driving the rear axle onto the tester.

Notes on dynamometers

Dynamometers normally do not cause any problems. The front spoilers for brake ventilation are only bent over slightly as the vehicle dips into the front roller set. The spoilers then return to their normal position and no damage is caused.
The rotation of the front rollers cannot cause any damage as these rollers are only turned for four-wheel drive vehicles.

Front and rear stabilizer adjustment

The front and rear stabilizers have five (front) and three (rear) mounting holes for individual adjustment.
The stabilizer is set to the central position.
This standard setting must not be changed for normal road use.
Caution: This setting must only be changed for individual adaptation to the driver's personal driving style in racing use.

Spoiler adjustment

The additional wing of the Clubsport version M 003 is set to the lowest (horizontal) position for road use.
The wing must not be set to any other position except for racing.
On public roads, the wing must always be set to the lowest position.

Racing camber values

Racing camber must not be set at the front or rear except for use on race circuits.
For use on public roads, only the values stated on pages 44 - 4 and 44 - 5 may be set.

4 Stabilizer allocation

	Front axle	Rear axle
911 Carrera / 911 Carrera 4		
RoW standard	21 mm	18 mm
RoW M 030	22 mm	20 mm
USA standard and long-distance running gear (M 032)		
first version, up to Feb. 10, 1994*	21 mm*	18 mm*
modified / current version	20 mm	17 mm
USA M 030	22 mm	20 mm
911 Carrera 4 S (Turbo-Look)		
RoW standard	20 mm	18 mm
RoW M 030	22 mm	20 mm
USA standard	20 mm	17 mm
USA M 030	22 mm	18 mm
911 Carrera RS		
M 002 / M 003	23 mm**	20 mm**
911 Turbo		
RoW	22 mm	21 mm
USA	22 mm	19 mm

Please refer to Technical Information Gr. 4, No. 5/94. When stocks have been used up, only the front axle stabilizer with 20 mm diameter and the rear axle stabilizer with 17 mm diameter will be available. When replacing stabilizers, the combination of 20 mm front axle and 17 mm rear axle stabilizers must be installed together.

** Adjustable (front 5 positions, rear 3 positions)

Printed in Germany - 15, 1995

40 Tightening torques for front axle

Caution: Do not apply grease to **Dacromet-type** screws and bolts (aluminum-color appearance).

Location	Thread	Tightening torque Nm (ftlb.)
Crossmember		
Crossmember to body		
outer	M 12 x 1,5	105 (77)
inner	M 10	48 (35)
Transmission shift support plate to crossmember	M 8	23 (17)
Central tube / Front-axle final drive		
Front-axle dinal drive to central tube	M 10	46 (34)
Transmission mount (rubber-metal mount)		
to front-axle cross member	M 8	23 (17)
to transmission (central tube)	M 12 x 1,5	85 (63)
Drive shaft		
to front-axle final drive	M 8	42 (31)
to wheel hub	M 22 x 1,5	460 (340)
Crossmember		
to body (front)	M 12 x 1,5	90 (66)
to crossmember (rear)	M 10	46 (34)
A-arm / joint carrier		
A-arm front to side member	M 12 x 1,5	110 (81)
A-arm rear to side member	M 12 x 1,5	85 (63)

Location	Thread	Tightening torque Nm (ftlb.)
Joint carrier to		
A-arm		
Caster eccentric	M 10	65 (48)
Mounting	M 12 x 1.5	120 (88)
Joint carrier to wheel carrier (ball joint)	M 12 x 1.5	75 (55)
Cooling air duct for brake to A-arm	M 6	10 (7)
Spring strut / wheel carrier		
Strut to wheel carrier		
upper bolt (camber adjuster)	M 12 x 1.5	120 (88)
lower bolt	M 14 x 1.5	200 (147)
Lock nut for height adjustment not to spring strut (Carrera RS only)	M 64 x 1.5	50
Spring strut mount to body	M 8	33 (24)
Spring strut mount - inner section to outer section (Carrera RS only)	M 10	64
Cap** of spring strut mount (Carrera RS only)	M 50 x 1.5	180**
Strut support mount to piston rod	M 14 x 1.5	80 (59)
Brake protection plate to wheel carrier	M 6	10 (7)
Brake caliper to wheel carrier*	M 12 x 1.5	85* (63)
Rpm sensor to wheel carrier	M 6	10 (7)
Retaining plate for wheel bearings to wheel carrier	M 8	37 (27)
Wheel hub to wheel carrier	M 22 x 1.5	460 (339)

* Replace bolts (only on front axle) whenever the screw connection has been undone

** Do not unscrew while vehicle is standing on its wheels. Use new cap after dismantling.

Location	Thread	Tightening torque Nm (ftlb.)
Stabilizer bar		
to side member	M 8	23 ((17)
Stabilizer mount to wheel carrier and stabilizer bar	M 10	46 (34)
Steering		
(for values not indicated, refer to Repair Group 48)		
Tie rod (ball joint) to steering arm	M 12 x 1.5	75 (55)
Universal joint (steering shaft) to steering gear	M 8	23* (17)
Steering gear to crossmember		Tightening torque and note in Steering Repair Group
Wheel mount		
Wheel to wheel hub	M 14 x 1.5	130 (96)

* Replace set screws whenever they have been removed

Printed in Germany - 12. 1995

40 05 37 Dismantling and assembling suspension

Tools

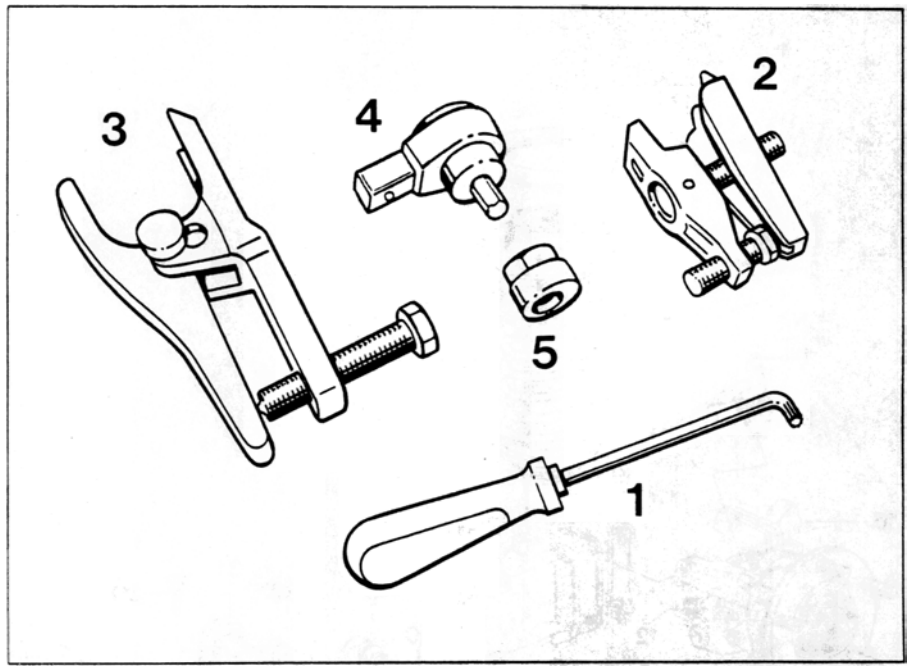

1707-40

No.	Designation	Special tool	Order number	Explanation
1	Torx screwdriver	9546	000.721.954.60	To lock the ball joints (tie rod and joint carrier) during assembly and disassembly
2	Tie rod puller			Commercially available, e.g. Nexus 168-1 used in conjunction with 12 mm cap nut (refer to page 40-11)
3	Puller (ball joint puller)	9560	000.721.956.00	To press out the ball joint of the wheel carrier
4	Reversible ratchet	9265/1	000.721.926.51	
5	Eccentric insert	9265	000.721.926.50	

40 05 37 Dismantling and assembling suspension

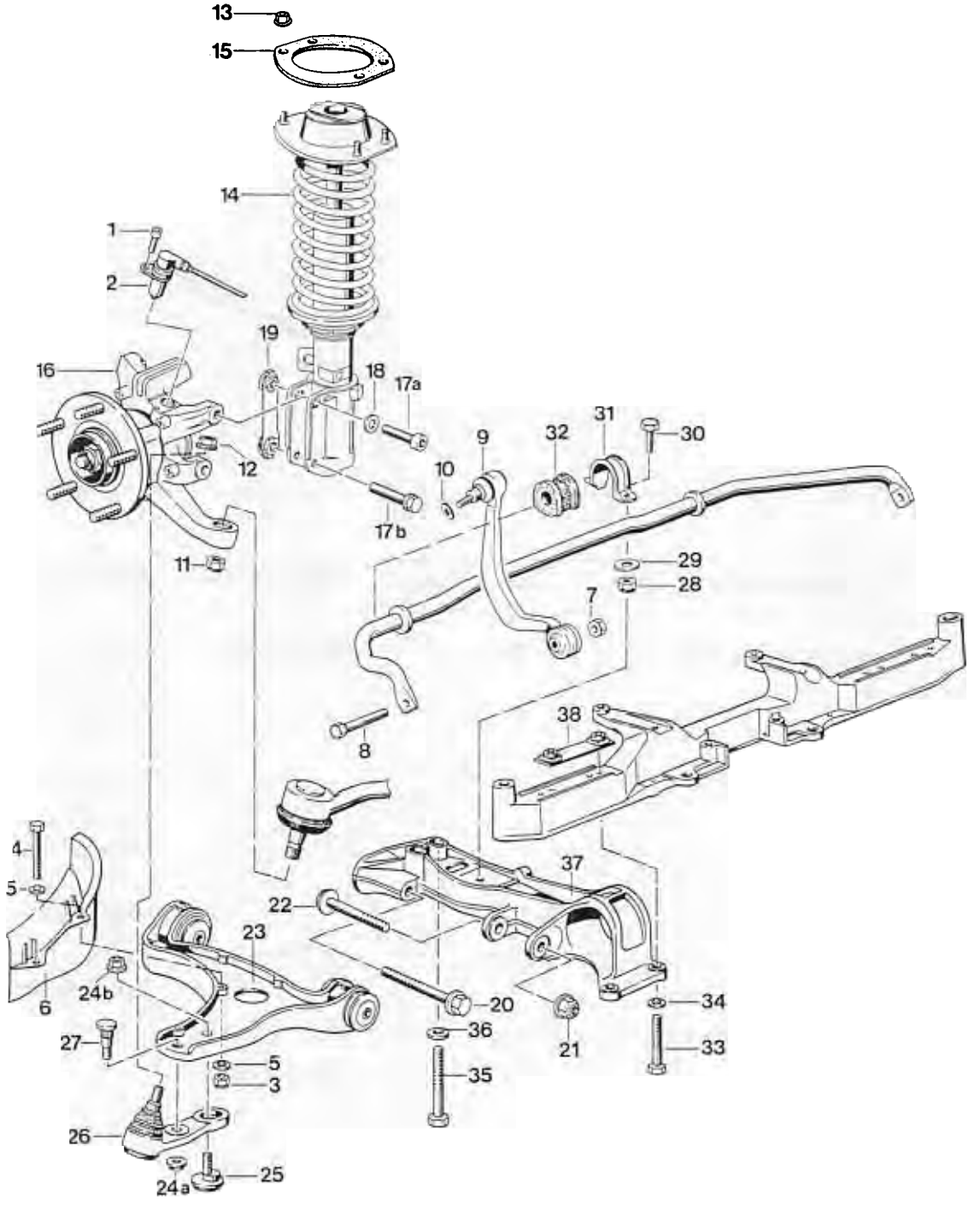

No.	Designation	Qty.	Note: Removal	Installation
1	Pan-head screw	1		Tighten to 10 Nm (7 ftlb.)
2	Rpm sensor	1		Coat stem with Molykote Longterm.
3	Lock nut	2		Replace. Tighten to 10 Nm (7 ftlb.).
4	Screw	2		
5	Washer	4		
6	Air guide	1		
7	Lock nut	1		Replace. Tighten to 46 Nm (34 ftlb.).
8	Screw	1		
9	Stabilizer mount (Figure shows M 030 mount. Standard running gear = mount with 2 ball joints)	1		Observe usage acc. to spares catalog when ordering spare parts. Coat threads of ball pin (mounting on wheel carrier) with Optimoly TA. Tighten to 46 Nm (34 ftlb.).
10	Washer	1		Replace.
11	Lock nut	1		Replace. Tapers of ball joint and steering arm must be free from grease. Tighten to 75 Nm (55 ftlb.).
12	Lock nut	1	Press off ball joint of joint carrier with Special Tool 9560 after having coated puller and rubber boot of ball joint with tire assembly compound.	Replace. Tapers of ball joint and steering arm must be free from grease. Tighten to 75 Nm (55 ftlb.).
13	Collar lock nut	4		Replace. Tighten to 33 Nm (24 ftlb.).

No.	Designation	Qty.	Note: Removal	Installation
14	Spring strut	1	The wheel carrier does not have to be unbolted to remove the strut, and the subsequent parts (No. 17 to No. 19) do not have to be removed either.	
15	Gasket	1		Replace.
16	Wheel carrier	1		If the wheel carrier has been removed from the strut, the wheel alignment must be checked and/or adjusted as required.
17a	Pan-head screw M 12	1		Replace.
17b	Hexagon head bolt M 14	1		Replace. Tightening torque (Nm/ftlb.): M 12 = 120 Nm (88) M 14 = 200 Nm (148)
18	Washer	1		Replace. Seating surface free from grease.
19	Cage with collar nuts	1		Replace.
20	Hexagon-head flange bolt M 12 x 1.5 10.9 120 mm long	1		Tighten to 105 Nm (77 ftlb.).
21	Collar lock nut M 12 x 1.5	1		Replace. Tighten to 85 Nm (63 ftlb.).
22	Hexagon head flange bolt M 12 x 1.5, 95 mm long	1		

No.	Designation	Qty.	Note: Removal	Installation
23	Control arm	1		If the joint carrier (No. 26) was removed from the control arm, the wheel alignment must be checked and/or adjusted as required. Caution: Right-hand and left-hand parts are different. No welding or straightening is permitted on those components. **When ordering spare parts, observe usage acc. to parts catalog to avoid confusion with 964 parts (refer to page 40-12).**
24a	Lock nut M 12	1	Undo only when replacing the control arm or joint carrier	Replace after removal. Tightening torque: Knurled bolt: M 12 = 140 Nm (103 ftlb.), Caster eccentric: M 10 = 80 Nm (59 ftlb.).
24b	Lock nut M 10	1		
25	Caster eccentric	1		
26	Joint carrier (ball joint)	1		Tapers of ball joint and wheel carrier must be free from grease. Do not confuse with 964 part when ordering spare parts. Identification: **993 = olive-colored and stamped with a 993 mark**. Bore diameter of mounting at wheel carrier = **12** mm. **964 = gold-colored.** Bore diameter (mounting) = **10** mm.

No.	Designation	Qty.	Note: Removal	Installation
27	Knurled bolt	1		Install in correct position and press into the **correct control arm (LHD and RHD)**.
28	Lock nut	1		Replace. Tighten to 23 Nm (17 ftlb.).
29	Washer	1		
30	Hexagon head bolt	1		
31	Clamp	1		
32	Stabilizer support	1		Observe correct usage (acc. to spares catalog) when ordering spare parts. Assemble with tire assembly compound or Omnis 32 (supplied by DEA).
33	Hexagon head bolt M 10	2		Tighten to 46 Nm (34 ftlb.).
34	Washer	2		
35	Hexagon head bolt M 12 x 1.5	2		Tighten to 90 Nm (66 ftlb.).
36	Washer	2		
37	Side member	1		When ordering spare parts, observe usage acc. to spares catalog to avoid confusion with 964 parts (also refer to page 40-12).
38	Threaded plate	1		

Dismantling and assembly notes

Dismantling

1. Remove front wheel and underside panel

2. Open combination connector on strut and pull out connectors.
   Unclip wiring from strut. Remove rpm sensor.

3. Disconnect brake pipe from brake hose at strut and unbolt brake caliper.
   Before carrying out this operation, press down brake pedal with pedal holder to prevent brake fluid from flowing in from the reservoir.
   Cover or plug brake hose and brake pipe (to avoid ingress of dirt).
   Remove retaining spring from brake hose.

4. Remove brake cooling air duct from control arm.
   Unbolt stabilizer mount from stabilizer bar and wheel carrier.

5. Undo lock nuts from tie rod ball joint and wheel carrier ball joint.
   Use Special Tool 9546 (Torx screwdriver) to prevent rotation when undoing the lock nuts.

6. Press tie tod ball joint out of steering arm.
   Use corresponding puller, e.g. Nexus 168-1 (No. 1) in conjunction with 12 mm cap nut (No. 2 / of Special Tool VW 267 a).

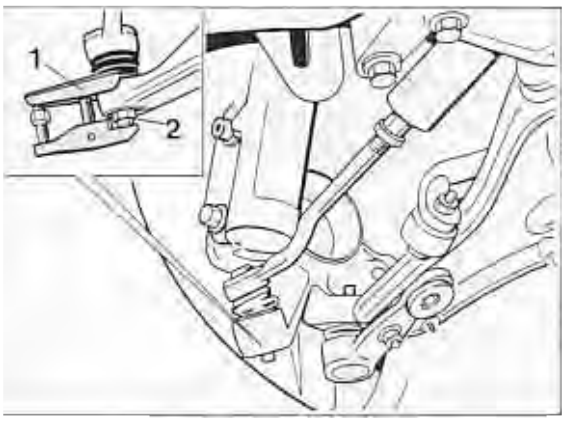

1703-40

Note

Start by turning tie rod towards the front (arrow). Then angle off ball joint (ball pin) according to Figure and extend it this position.

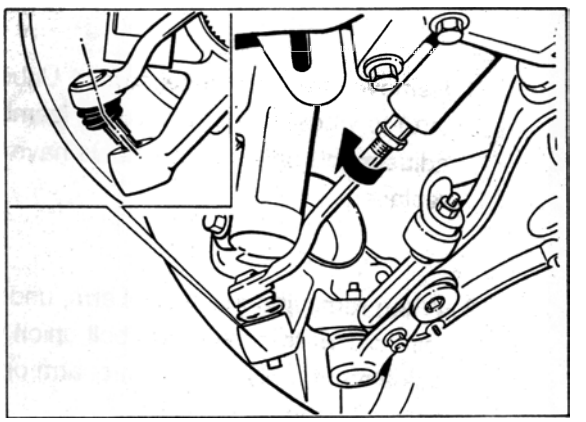

1704-40

7. Press off joint carrier (ball joint on wheel carrier) with separator (ball joint separator) **– Special Tool 9560.**

Note

To prevent the rubber boot of the ball joint from being damaged, coat rubber boot and puller with tire assembly compound in this area. Then place puller into position from the front.

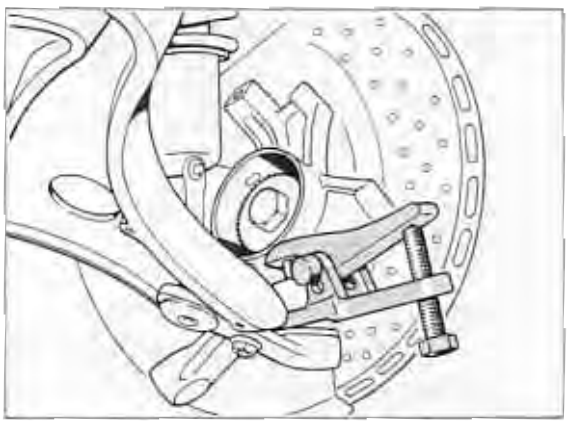

1705-40

8. Remove strut and wheel carrier. Unbolt strut-to-wheel carrier bolt union (camber adjustment) only if components have to be replaced.

9. When removing the control arm, undo the joint carrier-to-control arm bolt union (caster adjustment) only if the control arm or joint carrier has to be replaced.

Assembly

1. Assemble in reverse order. Before reassembly, check all parts visually, comparing with new parts if required.
   No welding or straightening is permitted on suspension components.
   Do not grease Dacromet-type nuts and bolts (aluminum color appearance).
   Observe tightening torques.

2. To avoid confusion when replacing components (**993 and 964 parts** and, in certain cases, right-hand and left-hand parts), observe **parts usage** acc. to spares catalog. **In addition,** check parts prior to assembly referring to the identification mark / casting number or the **inscribed** part number (identification feature).

   993 parts = casting number starting with 993.
   964 parts = casting number starting with 964.

   Spare part for left-hand side :
   3rd group of part number = **odd** digit.
   Spare part for right-hand side:
   3rd group of part number = **even** digit.
   Example:
   Right-hand part (control arm) = 993. 341. **018.** 01.
   Left-hand part (control arm) = 993. 341. **017.** 01.

Note

The following front-axle parts or adjacent parts differ from each other **only in minor details:**

– Side member

– Control arm with mounting bolts / mounting nut

– Joint carrier
993 = Olive-colored. Bore diameter of wheel carrier mount = 12 mm.
964 = Gold-colored.
Bore diameter (mount) = 10 mm

– Stabilizer bar / stabilizer bar mount

– Vibration damper

– Tensioning disc (ABS gear)
964 = 45 teeth
993 = 48 teeth

– Steering gear

– Brake booster with bracket

3. When fitting the control arm, start by screwing in the control arm mounting bolts only lightly.
Caution: Do not tighten the bolts until the vehicle rests on its wheels.

4. When tightening the lock nuts of the tie rod ball joint and the wheel carrier ball joint, use Special Tool 9546 (Torx screwdriver) to lock.

5. Install spring strut mount in correct position relative to strut dome, i.e. the red color dot (arrow) must point towards the front (strut mount is **not** symmetrical). This causes the damper piston rod to be offset towards the rear.

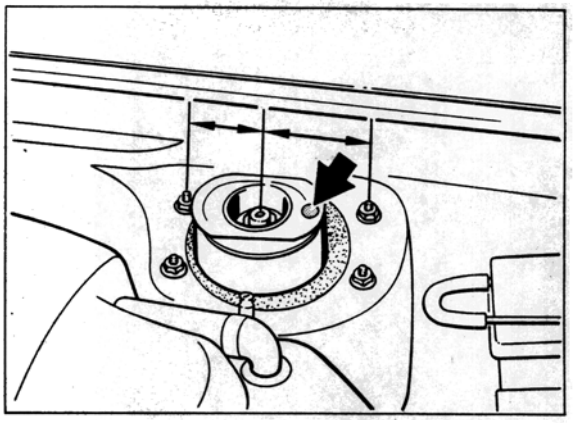

1706-40

6. Bleed front brake circuit.

7. After assembling components or replacing parts that affect the ride height, the suspension alignment must be checked completely (vehicle height and wheel alignment).
When replacing parts or undoing bolt unions that affect the wheel alignment only, check and/or adjust the wheel alignment.

Printed in Germany - VII, 1994

40 88 10 Replacing spring strut mount seals

1. Raise vehicle. Take off both front wheels.

2. Unscrew lock nut from tie rod ball joint. If required, use Special Tool 9546 (Torx screwdriver) to lock.

3. Press tie rod ball joint off the steering arm. Use suitable puller, e.g. Nexus 168-1 (No. 1), in conjunction with 12 mm cap nut (No. 2 / from Special Tool VW 267 a).

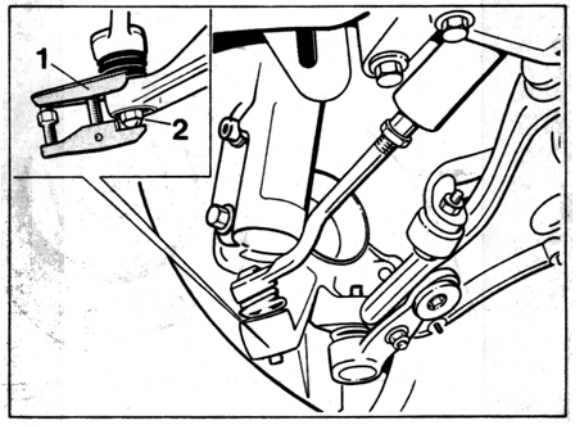

1703-40

Note

Start by turning tie rod forward (arrow). Then angle off ball joint (ball pin), observing drawing, and pull out in this position.

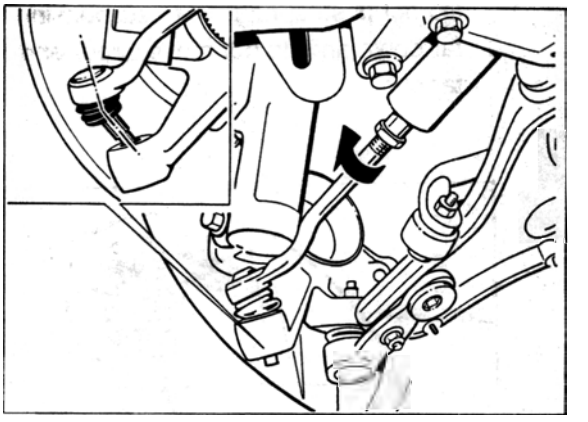

1704-40

4. Remove stabilizer mount from stabilizer bar. To facilitate assembly (for added assembly space and better tie rod position), move steering rack fully into steering housing.

5. Undo lock nuts (4 ea. M 8) from spring strut mount. Before undoing them, mark installation position of strut mount (position of four flange lock nuts).

6. Turn spring strut until the brake disc **points inside towards the rear** (arrow).
   Then press spring strut / suspension down and pivot upper end out of fender area.

   Caution: Make sure **the brake hose** and the electrical wiring are **not** under tension (risk of damage).
   Do not push spring strut / suspension too far down and do not move upper end too far out.

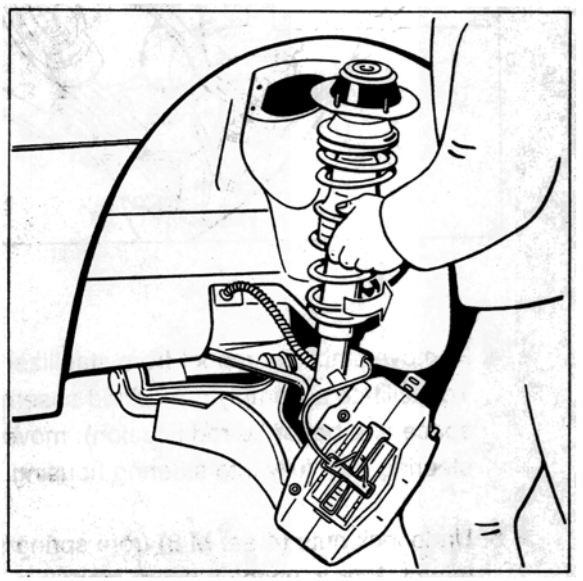

1821-40

7. Remove old seal. If required, a second mechanic should help with removal.
   Remove seal residue from spring strut turret and from body panels.

8. Bond new seal **correctly** in place:
   The threaded studs of the mount must be **centered** in the seal holes.
   If this precaution is not observed, the seal may be squeezed at the studs.

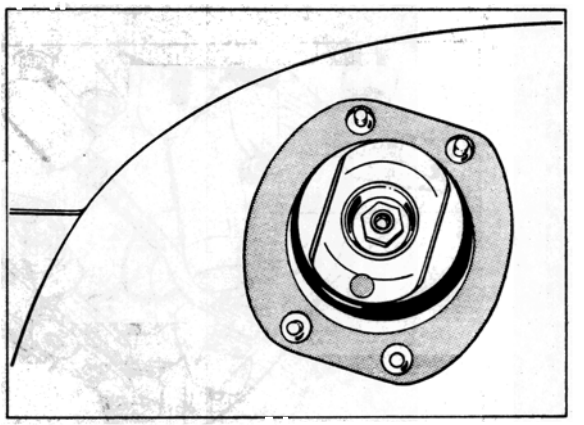

1822-40

9. Install spring strut mount to strut turret in correct position, i.e. the red color dot (arrow) must point forwards (strut mount is **not** symmetrical). This is the reason why the shock absorber piston rod is offset somewhat towards the rear.
   Use new lock nuts.
   Align spring strut with marks applied (position of four flange lock nuts) before tightening.

   Tightening torque 33 Nm (24 ftlb.).

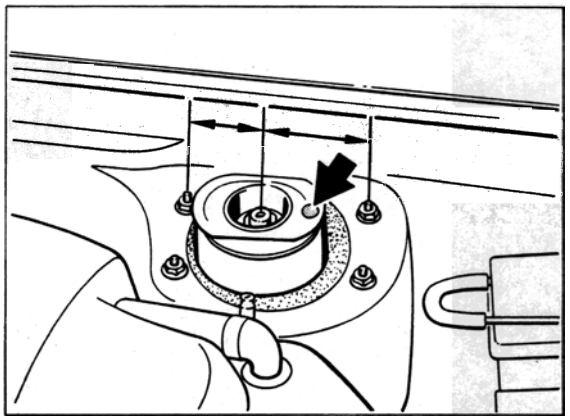

1706-40

Note

Do not grease threads (except for wheel mounting bolts) during reassembly.

10. Repeat assembly operations (items 2 to 9) on other side of axle.

11. Fit stabilizer mount and tie rods. Replace lock nuts.
    When tightening the lock nuts of the tie rod ball joint, use Special Tool 9546 (Torx screwdriver) to lock.

    Observe tightening torques:
    Tie rod ball joint **to**
    steering arm = 75 Nm (55 ftlb.).
    Stabilizer mount **to**
    stabilizer bar = 46 Nm (34 ftlb.).

12. Fit wheels (130 Nm / 96 ftlb.)).

Note

No suspension alignment is required if the seal is replaced in accordance with the above assembly instructions as the wheel alignment values will change only to a negligeable extent. The front-axle toe setting (total setting) will only change within a maximum of 5'.

40 85 19 Removing and installing front spring strut

Removal

1. Jack up vehicle. Remove front wheel.

2. Open connector unit on spring strut and pull out connectors.
   Unclip electrical cable from spring strut.

3. Disconnect brake line on spring strut from brake hose. Before doing so, fix brake pedal in depressed position using pedal lock to prevent brake fluid from flowing from reservoir.
   Cover or close brake hose and brake line (to keep dirt out). Remove retaining spring from brake hose.

4. Release bolts connecting spring strut to wheel carrier.
   Release fastening nuts (4 x M 8) on spring strut mount and remove spring strut.

Important Note

To prevent damage to the tie rod ball joint at the steering end, do not pull the suspension **too far down when** extending the strut (**do not pull down** until the stop of the tie rod ball joint is reached).
Tie suspension immediately out of the way with a piece of wire or a tie-wrap (suspend at the top) after removing the strut.

Installation

1. Observe specified tightening torque values.

2. Check gasket for spring strut mount and replace if necessary. To do so, remove the old gasket and any remains of the gasket on the spring strut dome and bodywork.

3. Bond new gasket in **correct position**.
   The bolts of the spring strut mount must be **centered** in the holes of the gasket
   If the gasket is not positioned properly, it may be squashed by the bolts.

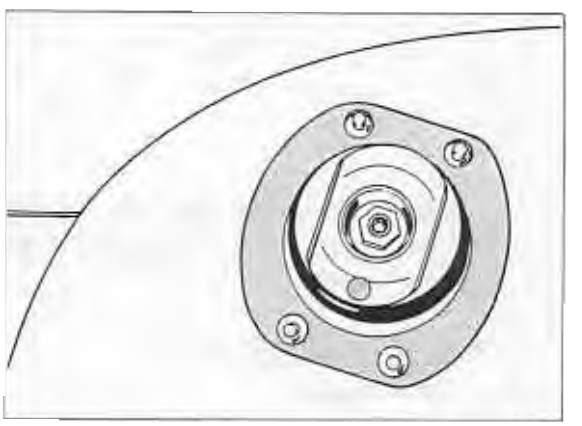

1822-40

4. Insert spring strut in vehicle.
   Position the spring strut mount correctly on the spring strut dome. The red dot (arrow) must point to the front (the spring strut mount is **not** symmetrical). In this position, the shock absorber piston rod is offset to the back.
   Use new fastening nuts.

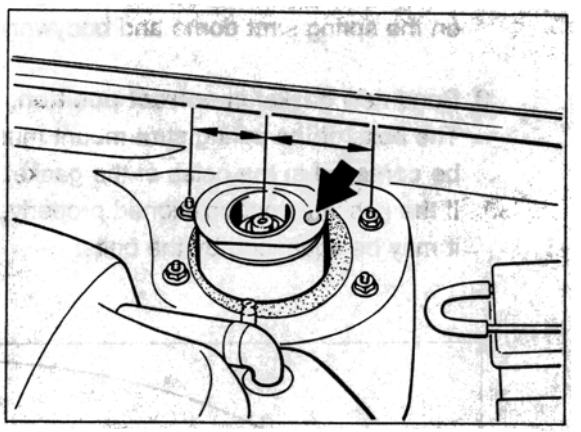

1706-40

5. Replace mounting bolts and cage with fastening nuts for bolting spring strut to wheel carrier.

6. Bleed front brake circuit.
   Install wheel.

7. Check and, if necessary adjust, front axle wheel alignment values.

Note

In the case of assembly work or the replacement of parts which may affect the height of the vehicle, a complete suspension alignment check (vehicle height and wheel alignment) must be carried out.

40 Dismantling and assembling front spring strut

Dismantling spring strut

Compress coil spring using a coil spring compressor tool (e.g. a Klann tool) until the piston rod is unloaded.

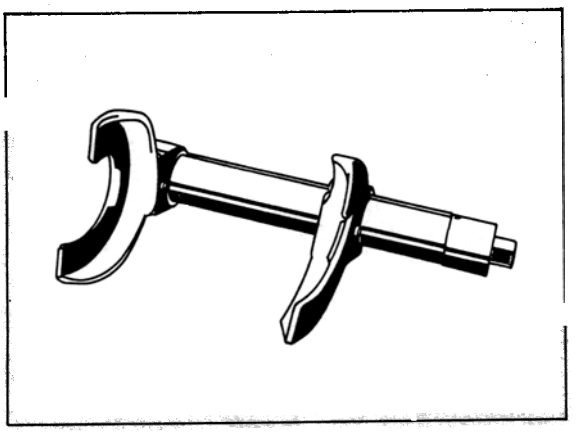

770-42

To loosen the bolting between piston rod and spring strut mount, hold a 7 mm Allen wrench against the piston rod.
Caution: Do not under any circumstances use a power impact wrench to loosen or tighten the fastening nut.

Remove all parts from the piston rod.

Note

When installing new parts, follow the allocation given in the spares catalog.

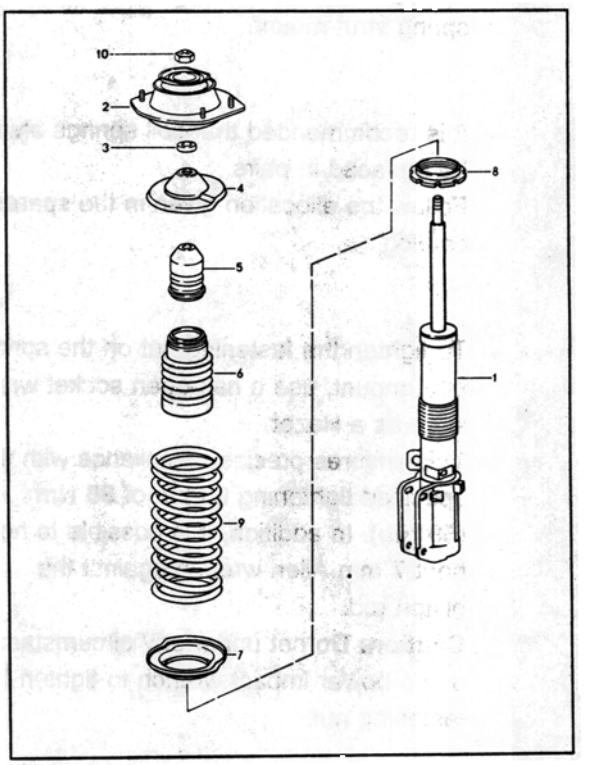

Assembling spring strut

– Use new fastening nut for attaching piston rod to spring strut mount.

If necessary (when replacing the shock absorber), set the adjustment nut, item 8, to the **same position** as on the old shock absorber. (Transfer position to new shock absorber).
Lubricate adjustment nut thread with Optimoly **TA**.

Shock absorbers of different makes must not be installed on the same axle.

In the case of progressive coil springs **the tighter winding** must point towards the spring strut mount.

– It is recommended that coil springs always be replaced in pairs.
Follow the allocation given in the spares catalog.

To tighten the fastening nut on the spring strut mount, use a half-open socket wrench such as a Hazet
This ensures precise compliance with the specified tightening torque of **80 Nm (59 ftlb)**. In addition, it is possible to hold a bent 7 mm Allen wrench against the piston rod.
Caution: Do not under any circumstances use a power impact wrench to tighten the fastening nut.

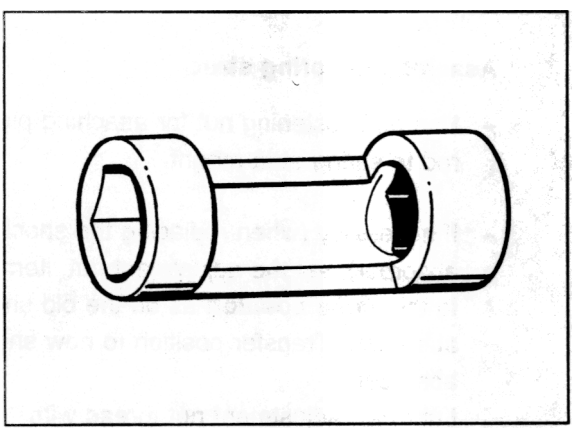

40 Carrera RS - Disassembling and assembling spring strut, front

Important note

Remove plug no. 1 with the vehicle lifted before removing the spring strut.

When replacing the vibration damper or the coil spring, do not separate the upper part and the lower part of the bracket, nos. 18 and 16, respectively, but remove the entire assembly no. 4.

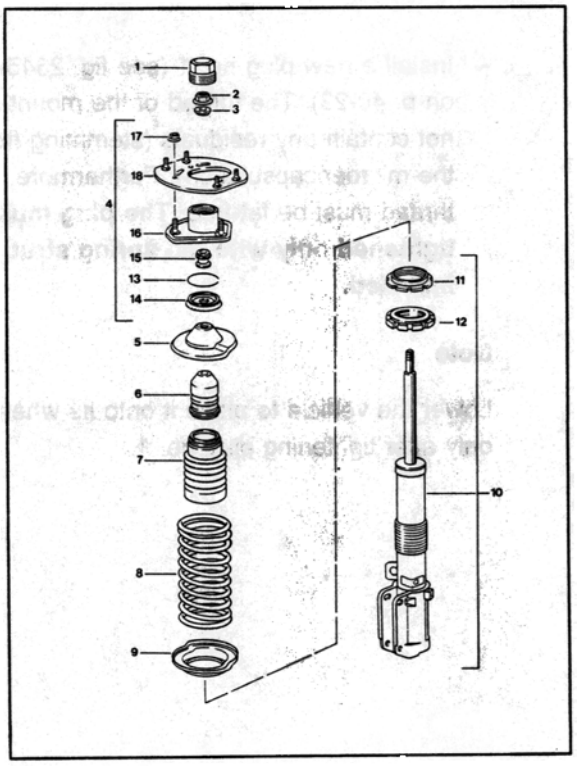

2345-40

Disasembling spring strut

- To separate the connection - piston rod to spring strut mount - use a 7 mm Allen key for locking the piston rod.
  Important: Do not use an impact screwdriver to slacken and tighten fastening nut no. 2.

- To remove fastening nut no. 2 completely, preload coil spring using a spring clamp until there is no more load on the pistion rod.
  In some cases, it is possible to preload the spring coil manually (dependent on position of adjusting nut no. 11).

- Remove all parts from the piston rod.

Assembling spring strut

- **Observe parts assignment according to the spare parts catalog when installing new parts.**

- Replace nut no. 2 fastening the piston rod to the spring strut mount.

- If necessary (when replacing the vibration damper), set adjusting nut no. 11 **to the same position as on the old vibration damper (transferring adjusting dimension to the new damper)** to prevent nut no. 12 from working loose (locking).
  Apply Optimoly **TA** to the thread of the adjusting nut.

The narrow winding of the spring coil must face the spring strut mount.

- It is recommended to replace the coil springs in pairs.
  Observe assignment in accordance with spare parts catalog.

- If necessary (when replacing the mount), fit parts no. 13 / 14 / 15 to mount no. 16 (chart 2345-40 on p. 40-23).

Note

On mounts that have run dry, the bearing cup can be greased using **Autol Top 2000**.
Manufacturer:
Autol-Werke
Paradiesstr. 14
97080 Würzburg
Germany

To tighten the fastening nut on the spring strut mount, use an open-jawed socket key insert, e.g. by Hazet.
Thus the required tightening torque of **80 Nm** can be set exactly. Furthermore, locking the piston rod using a 7 mm Allen key is possible this way.
Important: Do not use an impact screwdriver to tighten the fastening nut.

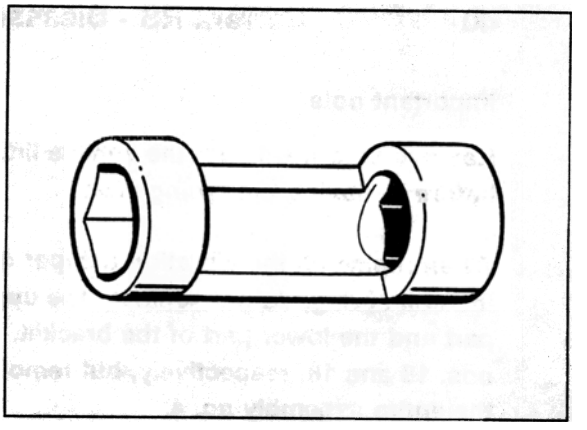

2047-40

- Install a **new** plug no. 1 (see fig. 2345-40 on p. 40-23). The thread of the mount must not contain any residuals (stemming from the microencapsulation). Furthermore, the thread must be fat-free. **The plug must be tightened only with the spring strut installed.**

Note

Lower the vehicle to place it onto its wheels only after tightening plug no. 1.

42 Tightening torques for rear axle

Caution: Do not apply grease to **Dacromet-type bolt unions** (aluminium-color appearance).

Location	Thread	Tightening torque Nm (ftlb.)
Suspension subframe/crossmember		
Subframe (side parts) to body (rubber-metal mount)	M 12 x 1.5	120 (88)
Crossmember **upper** (2 parts)		
Bolt connection to side parts	M 12 x 1.5	85 (63)
Center bolt connection of 2 sections	M 10	65 (48)
Crossmember **rear** to side parts	M 12 x 1.5	120 (88)
Crossmember **front** to side parts	M 10	65 (48)
Rear axle trailing arm		
Arm **2** (toe link)		
to wheel carrier	M 12 x 1.5	85 (63)
to crossmember (eccentric)	M 12 x 1.5	100 (74)
Arm **1/5** (lower link)		
to suspension subframe	M 12 x 1.5	85 (63)
to suspension subframe	M 14 x 1.5	200 (147)
to wheel carrier	M 12 x 1.5	75 (55)
Arm **3** (camber link)		
to wheel carrier	M 12 x 1.5	75 (55)
to suspension subframe (eccentric)	M 12 x 1.5	85 (63)
Arm **4** (caster link)		
to wheel carrier	M 12 x 1.5	75 (55)
to suspension subframe (eccentric)	M 12 x 1.5	85 (63)

Location	Thread	Tightening torque Nm (ftlb.)
Wheel carrier		
Wheel bearing to wheel carrier	M 8	23 (17)
Rpm sensor to wheel carrier	M 6	10 (7)
Brake protection plate to wheel carrier	M 6	10 (7)
Brake disc to wheel hub	M 6	5 (4)
Brake disc to wheel carrier	M 12 x 1.5	85 (63)
Spring strut		
to body	M 8	33 (24)
to wheel carrier (arm 2)	M 12 x 1.5	85 (63)
Damper to mount (piston rod)	M 12 x 1.5	58 (43)
Cap** of spring strut mount (Carrera RS only)	M 50 x 1.5	180**
joint block /lock nut** to spring strut (Carrera RS only)	M 52 x 1.5	100***
Wheel mounting		
Wheel to wheel hub	M 14 x 1.5	130 (96)

When stocks of 8.8 bolts have been used up, only 10.9 bolts will be available.

Do not unscrew while vehicle is standing on its wheels. Use new cap after dismantling.

*** Do not unscrew. See note on page 4 - 4.

Location	Thread	Tightening torque Nm (ftlb.)
Drive shaft		
to transmission	M 10	81 (60)
to wheel hub	M 22 x 1.5	460 (339)
Fastening nut	M 22 x 1.5	200* (147*)
lock nut*		
Stabilizer bar		
to crossmember	M 8	23 (17)
to stabilizer mount	M 10	46 (34)
Stabilizer mount to spring strut	M 10	46 (34)

* Additional lock nut on 911 Carrera RS. Bevel on lock nut faces fastening nut.

Printed in Germany - 12. 1995

42 03 37 Dismantling and assembling suspension

Tools

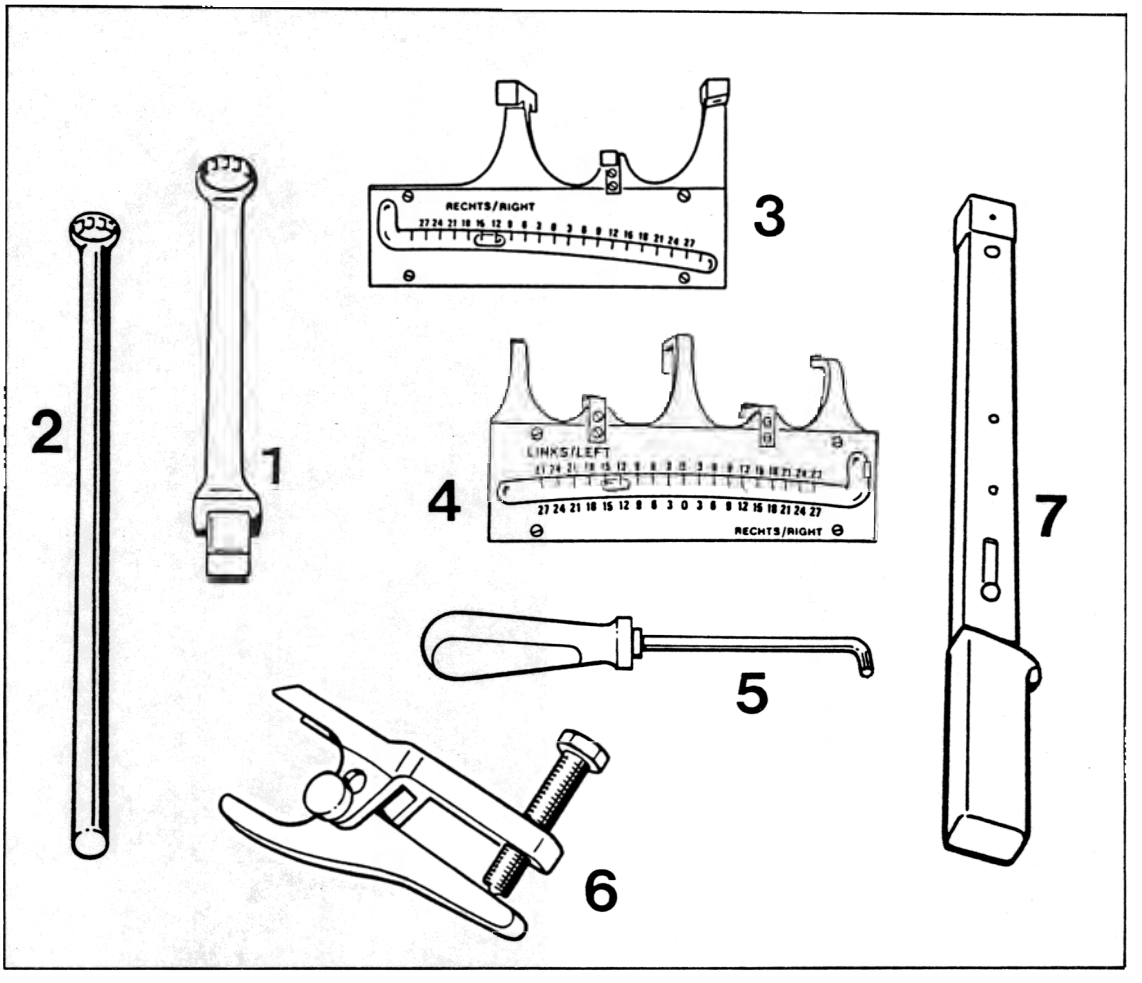

1842-42

Tools

No.	Designation	Special tool	Order No.	Explanation
1	Insert for torque wrench	9558	000.721.955.80	For rear-axle camber adjustment. Used to slacken and tighten the lock nut. **Caution:** A lock nut tightening torque of **85 Nm** (63 ftlb.) is equivalent to **approx. 65 Nm** (48 ftlb.) at the torque wrench
2	Retaining wrench	9557	000.721.955.70	Use in conjunction with Special Tool 9558. Used to lock at camber eccentric
3	Measuring tool (angle measuring tool) for kinematic change of toe-in	9549	000.721.954.90	For rear-axle control arm 1/5 (lower arm) on left and right side
4	Measuring tool (angle measuring tool) for kinematic change of toe-in	9550	000.721.955.00	For rear-axle control arm 2 (toe control arm) on left and right side
5	Torx screwdriver	9546	000.721.954.60	Used to lock the ball joints during assembly and dismantling
6	Extractor tool (Ball joint puller)	9560	000.721.956.00	Used to press out the ball joints at the wheel carrier
7	Torque wrench			Commercially availiable tool, use with No. 1. **Caution: Observe changed tightening torque when insert No. 1 is used**

Dismantling and assembling suspension

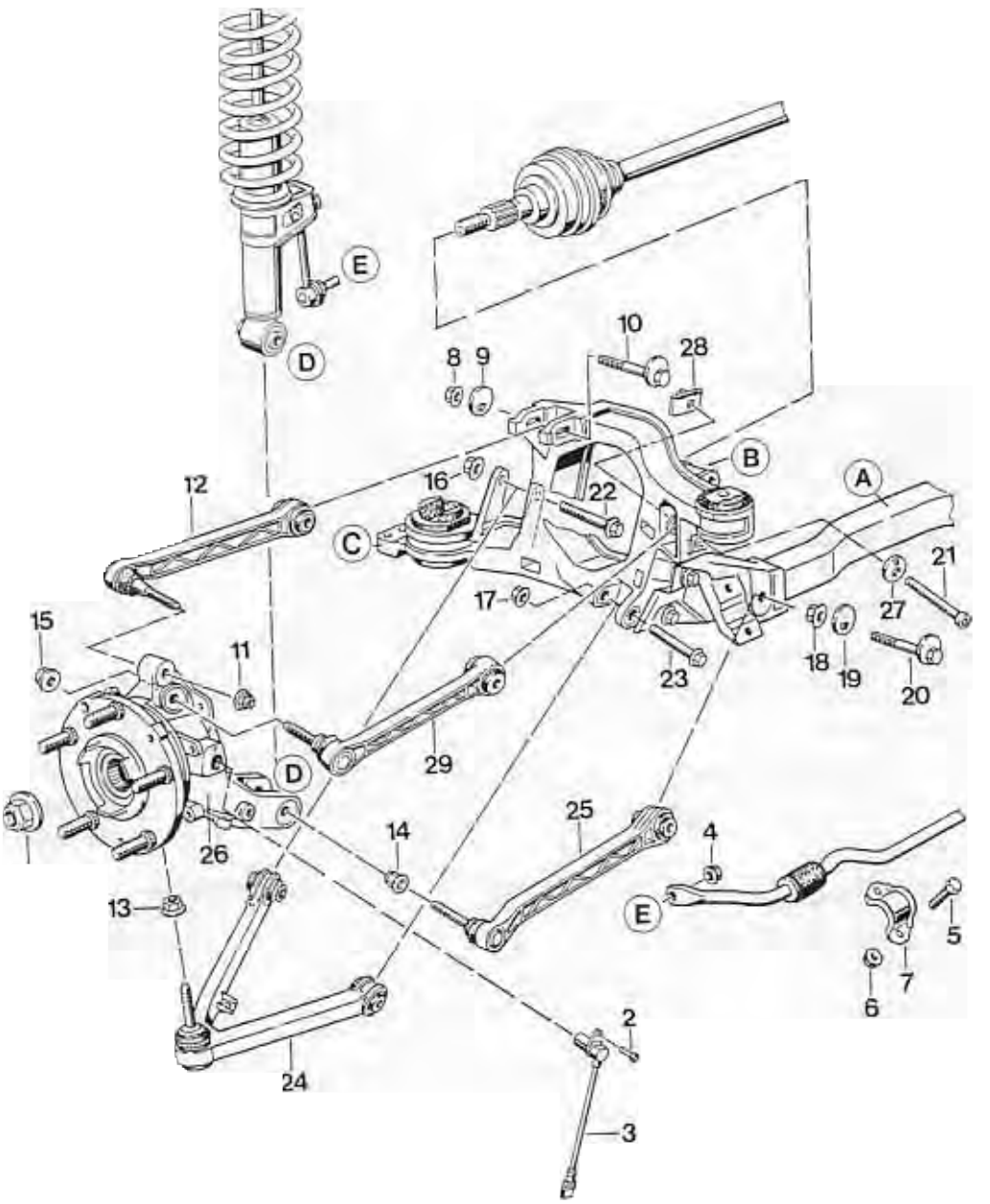

A = Rear crossmember **B / C = Upper or front crossmember mount**

To ensure clarity, the **front crossmember (C area)** and the **upper crossmember (B area)** are not marked. **These components as well as the rear crossmember (A)** do **not** have to be removed.

No.	Designation	Qty.	Note: Removal	Installation
1	Lock nut	1	Actuate the brakes when undoing the lock nut.	Replace. Coat threads, nut support face and drive shaft splines with Optimoly HT. Tighten to 460 Nm (340 ftlb.)
2	Pan-head screw	1		Tighten to 10 Nm (7 ftlb.)
3	Rpm sensor	1		Coat stem with Molykote Longterm
4	Lock nut M 10	1	Use an open-ended wrench to lock at ball joint of stabilizer mount	Replace. Tighten to 46 Nm ((34 ftlb.)
5	Hexagon head bolt	2		
6	Lock nut	2		Replace. Tighten to 23 Nm (17 ftlb.)
7	Retaining bracket	1		
8	Lock nut M 12	1	Mark position of camber eccentric (No. 10) for reinstallation before undoing the lock nut	Replace. Tightening torque 85 Nm (63 ftlb.). Also observe item 5 on page 42 - 14.
9	Eccentric washer	1		
10	Camber eccentric	1		Observe items 2 and 5 on page 42 - 13/14. Install in same position as before removal (acc. to markings)
11	Lock nut	1		Replace. Tighten to 75 Nm (55 ftlb.).
12	Control arm 3 (camber arm)	1		No welding and straightening is permitted on this component
13	Lock nut M 12	1	Start by slackening only. Observe assembly notes on page 42 - 11/12.	Replace. Tighten to 75 Nm (55 ftlb.).

No.	Designation	Qty.	Note: Removal	Installation
14	Lock nut M 12	1	Start by slackening only. Observe assembly notes on page 42 - 11/12.	Replace. Tighten to 85 Nm (63 ftlb.).
15	Lock nut M 12	1	Start by slackening only. Observe assembly notes on page 42 - 11/12.	Replace. Tighten to 75 Nm (55 ftlb.).
16	Lock nut M 14	1		Replace. Tighten to 200 Nm (147 ftlb.).
17	Lock nut M 12	1		Replace. Tighten to 85 Nm (63 ftlb.). Tighten in zero position only (page 44 - 14)
18	Lock nut M 12	1	Mark position of toe eccentric (No. 20) relative to crossmember before undoing	Replace. Tightening torque 100 Nm (74 ftlb.). Also observe item 5 on page 42 - 14.
19	Eccentric washer	1		
20	Toe eccentric	1		Observe items 2 and 5 on page 42 - 13/14. Install in same position as before removal (acc. to markings)
21	Pan-head screw M 12	1	Mark position of eccentric washer (No. 27) before undoing the screw. Start by slackening only. Observe assembly notes on page 42 - 12.	Tightening torque 85 Nm (63 ftlb.). Also observe item 5 on page 42 - 14
22	Hexagon head bolt M 14	1		
23	Hexagon head bolt M 12	1		
24	Control arm 1/5	1		No welding and straightening is permitted on this component.

No.	Designation	Qty.	Note: Removal	Note: Installation
25	Control arm 2 (camber arm)	1		No welding and straightening is permitted on this component.
26	Wheel carrier	1		Tapers of control arm 1/5, arm 3 and arm 4 to wheel carrier and control arm must be grease-free
27	Eccentric washer	1		Install in same position as before removal (acc. to markings).
28	Captive nut	1		
29	Control arm 4	1		No welding and straightening is permitted on this component.

Dismantling and assembly notes

Dismantling

1. Remove rear wheel, engine guard for engine/transmission and rear underbody panel.

2. Undo drive shaft mounting at wheel, actuating the brakes at the same time.

Note

As considerable force is needed to move the drive shaft in the teeth of the wheel hub, push the drive shaft out of the hub using a wheel hub puller (see p. 42-17). At this stage, it is not yet possible to pull the drive shaft out completely.

3. Remove cover from control arm 1/5 (unclip).

4. Remove mounting screw from ground lead and rpm sensor combination plug (arrows) at wheel carrier.
Unclip wires from wheel carrier (No. 1) and on handbrake cable.
Remove rpm sensor.

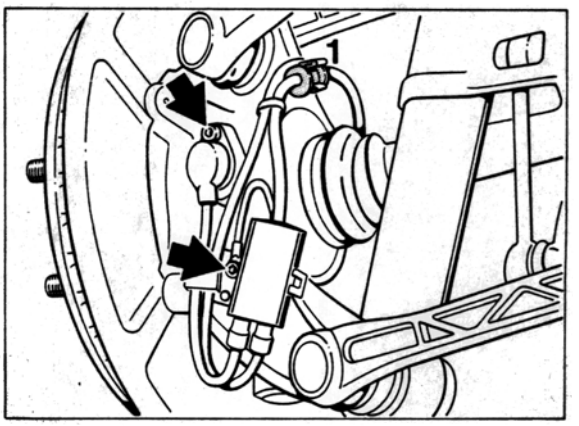

1843-42

5. Remove brake caliper from wheel carrier and suspend inside wheel housing.

6. Undo stabilizer mount from stabilizer bar (lock with open-ended wrench). Remove stabilizer clamp.

Note

The stabilizer mount remains assembled to the strut. It is **not** necessary to remove the stabilizer.

7. Remove handbrake cable
(observe note **before removal**).
Procedure:

Remove cassette box and cover above handbrake lever.

Separate lock nut and adjustment nut (No. 1) from tie rod (No. 2) and unbolt completely.

Remove retainer (No. 3) from support pin (No. 4) of handbrake lever and remove support pin.

Take out handbrake lever (complete with pull rod).

Disengage tab washer (No. 5) of handbrake cables from retaining lug (No. 6) on upper and lower side.

Disconnect corresponding handbrake cable and pull out of guide in rearward direction.

The handbrake cable may remain installed when the wheel bearing, the wheel carrier or the wheel hub is replaced.
In this case, unbolt brake disc and parking brake assembly instead.

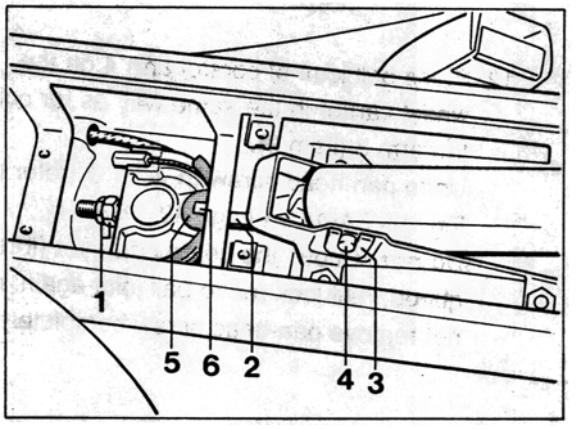

1844-42

8. **Mark position** of eccentric bolts **A and B** as well as eccentric washer **C II** for reinstallation.
   Then remove eccentric **B.**

Eccentric bolts **A** and **B** are **identical.**
The eccentric bolts A and B must therefore be marked in such a way that they may be refitted to the **correct** control arm during reassembly.

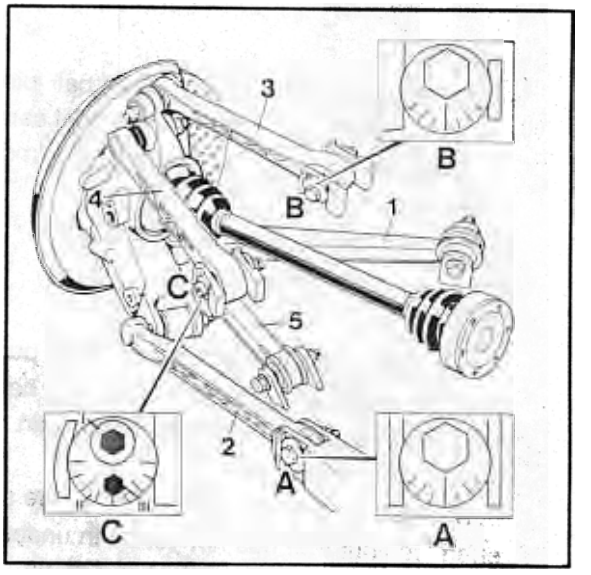

1445A-44

9. Remove control arm **3**, undoing lock nut on wheel carrier and **pressing off ball joint with Special Tool 9560.**
   Then (after having removed control arm 3) **unbolt all** control arms **from wheel carrier.**
   (Do not yet unscrew lock nuts completely)
   When undoing the lock nuts, use Special Tool 9546 **to prevent the assembly from turning.**

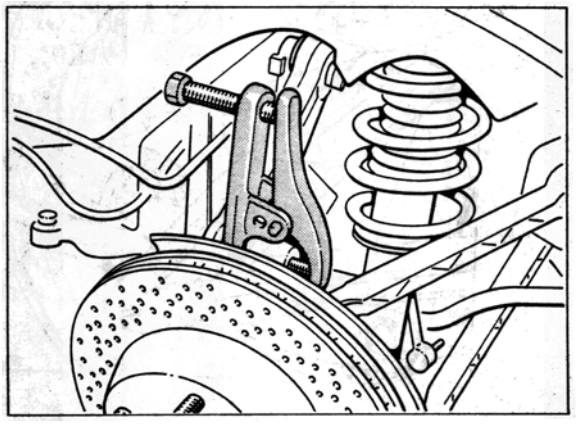

1846-42

10. Using Special Tool 9560, press ball joint off the control arm **1/5** at the wheel carrier. Then undo inner mounting (2 bolts on sub-frame).
    Do **not yet** remove the control arm.

Note

When pulling off the ball joint, increase puller force by applying a driving force (apply hammer blows to a copper drift in the ball pin area) if required.
In addition, the puller must force on the slackened lock nut that has not yet been undone completely (to protect threads and Torx).
To press off, undo lock nut only far enough to allow it to protrude slightly beyond the threads of the ball pin.

Caution: If additional driving force (copper drift) is applied to increase the puller force, check seating of steel bushing in the wheel carrier of control arm 1/5. If the seating is not correct, press or drive bushing in again until it is seated correctly (observe splines).

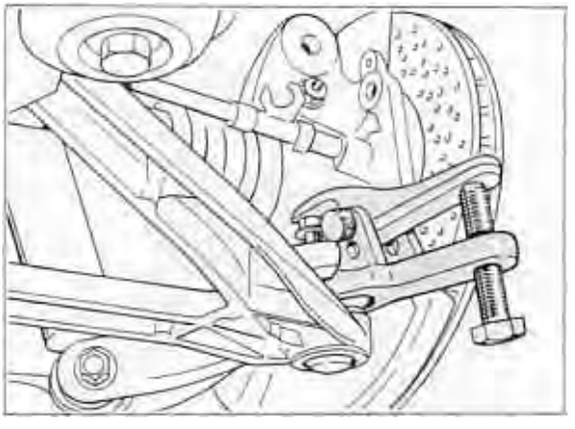

1847-42

11. Remove eccentric from control arm **2** (toe control arm) and pivot control arm out of crossmember in downward direction.
    The control arm remains attached to the wheel carrier / spring strut, however (lock nut is slackened).

12. Press ball joint of control arm **4** off the wheel carrier in the same way as for control arm 3 (item 9).
    Undo pan-head screw **in area C** (refer to Fig. 1445A-44 on page 42-11).
    Do **not** remove the control arm yet (if required, refit lock nut to ball joint again; do not remove pan-head screw completely).

13. Remove control arm **1/5** (lower control arm).

14. Remove control arm **2**, control arm **4** and wheel carrier.

Note

After extracting the drive shaft out of the wheel carrier, suspend it immediately in a horizontal position at the spring strut.

Assembly

1. Assemble in reverse order. Check all parts visually before assembly. If in doubt, compare with new parts.
   No welding or straightening operations are permitted on these suspension components.

2. Check condition of threads and **grade** of camber and toe eccentric.
   Specified grade: 10.9 (Initial version was 8.8 grade; observe spares catalog). The grade is indicated on the bolt head.
   Replace eccentrics if required (if threads are not o.k. or if they are to 8.8 specification).
   Transfer position marks to new eccentrics in such cases.

3. Dacromet-type bolt unions (aluminum color) must not be greased. Observe tightening torques.
   Caution: Observe item 5 when tightening the bolt unions on the subframe (page 42 - 14).

4. Control arms 2, 3 and 4 may be identified by the casting numbers or by their shape (visual inspection).

Identification marks (visual)

Control arm 2:
Longer than control arm 3 and control arm 4.

Control arm 3:
Shortest control arm. Straight shape in ball joint section.

Control arm 4:
Longer than control arm 3. Angled in ball joint section. Taper of ball joint stud is **greater** than on control arm 3.

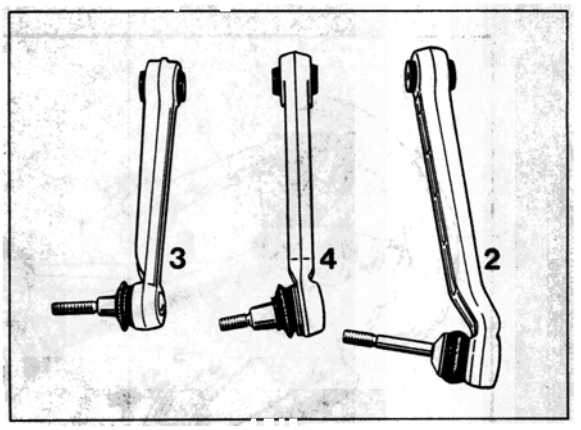

1848-42

5. Tighten bolts in **A / B / C sections** and bolt of **control arm 5** (arrow) **in center position.** The bolts in the **A, B, C** area should at this stage only be tightened to approx. 80% of the specified torque (as they must be undone again for suspension alignment).
   Zero position: Control arm 2 and the rear crossmember must form a horizontal line.
   To establish the **zero position,** raise wheel carrier with general-purpose jack.

Note

The above bolts may also be tightened after the vehicle is placed on its wheels and has been jounced several times by approx. 25 mm.

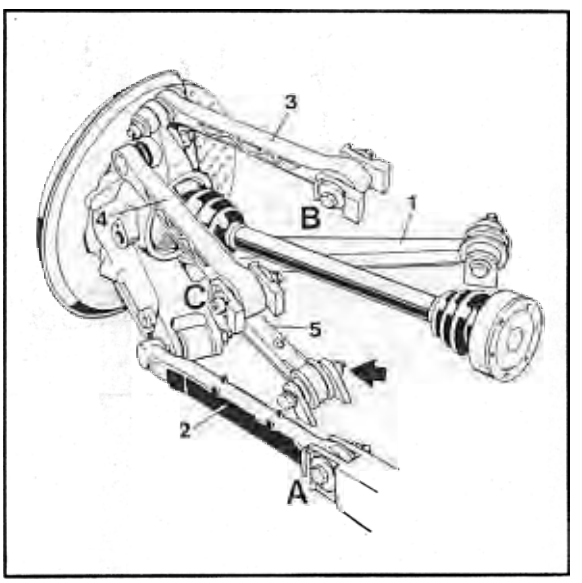

1845-42

6. Fit handbrake cable or refit parking brake assembly and brake disc.
   Adjust parking brake (page 46-13).

7. Carry out suspension alignment (wheel settings). Be sure to observe correct **adjustment sequence** (page 44 - 13).

8. Install cover of control arm 1/5 and the respective underbody panels.

42 21 19 Removing and installing drive shaft (manual transmission)

Important notes

With regard to drive shaft installation and removal, there are considerable differences in the configuration between transmission types and the sides of the vehicle. Separate descriptions are therefore given for:

the **left** drive shaft of manual transmission vehicles = vehicle on wheels

the **right** drive shaft of manual transmission vehicles = partial dismantling of suspension

the drive shafts of Tiptronic vehicles = partial dismantling of suspension
See description from page 42 - 17.

Removing and installing left drive shaft

1. Drive vehicle onto **drive-on ramp** or measurement platform.

2. Remove hup cap. Loosen drive shaft from wheel. When doing so, also apply the brakes.
   Caution: After loosening the drive shaft, you must not drive or move the vehicle. Otherwise, the wheel bearing may be damaged.

Note

As considerable force is needed to move the drive shaft in the teeth of the wheel hub, loosen the drive shaft using a copper drift.
With **unfavorable** tolerances, it may be necessary to push the drive shaft out of the hub
using a wheel hub puller (e.g. a Klann or Schrem tool) (see p. 42-17).
On the 911 Turbo, a ventilation tube is inserted in the joint on the wheel.
To prevent damage to the ventilation pipe when pressing the drive shaft out of the wheel hub, insert a pressure piece, e.g. VW 295A, between the puller spindle and the drive shaft.
Note: At this stage, it is **not yet possible** to pull the drive shaft out completely.

3. Remove engine guard from engine/transmission and rear underside panel. Remove cover from control arm 1/5 (unclip).

4. Remove heating pipe (no. 1).

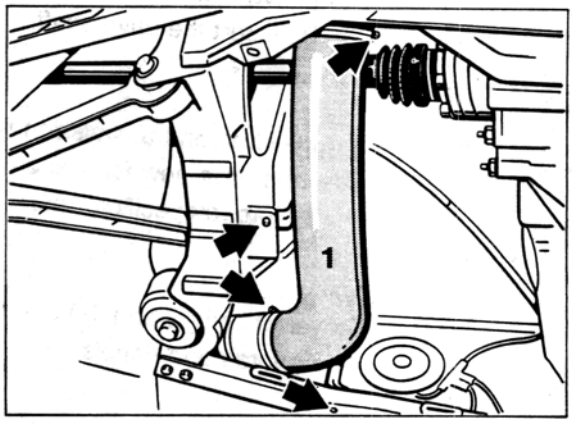

2082-42

Printed in Germany - 10.1995

5. To prevent damage to the drive shaft, place a protective tube on the drive shaft (arrow). Unbolt drive shaft from transmission flange (pan head screws) and pull out drive shaft. If necessary, pull the vehicle down slightly onto the springs to pull the drive shaft out.

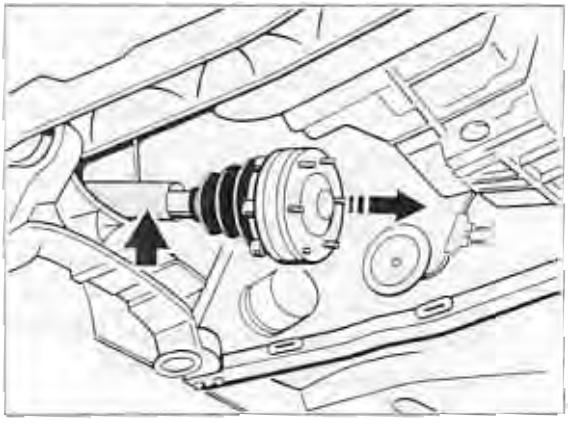

2083-42

6. To install the drive shaft, proceed in reverse order. Carry out a visual inspection of all parts before starting installation. Grease the drive shaft teeth with Optimoly HT. Insert the drive shaft.

7. Tighten drive shaft on transmission flange and wheel hub. Use new fastening nut. Comply with torque specifications.

8. Install cover of control arm 1/5 and the underside guards and panels.

Removing and installing right drive shaft

The procedure is the same as for Tiptronic vehicles.
See description from page 42-17.

42 21 19 Removing and installing drive shaft (vehicles with Tiptronic)

Removal

1. Remove rear wheel, engine guard from engine/transmission and rear underside panel.

2. Loosen drive shaft from wheel. When doing so, also apply the brakes.

Note

As considerable force is needed to move the drive shaft in the teeth of the wheel hub, loosen the drive shaft using a copper drift.
With unfavorable tolerances, it may be necessary to push the drive shaft out of the hub using a wheel hub puller (e.g. a Klann or Schrem tool).
On the 911 Turbo, a ventilation tube is inserted in the joint on the wheel.
To prevent damage to the ventilation pipe when pressing the drive shaft out of the wheel hub, insert a pressure piece, e.g. VW 295A, between the puller spindle and the drive shaft.
Note: At this stage, it is **not yet possible** to pull the drive shaft out completely.

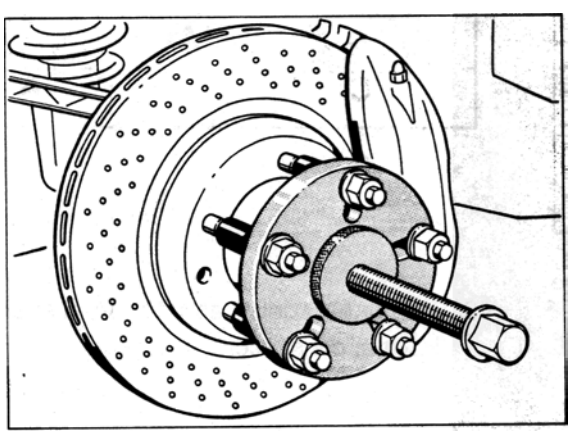

2084-42

3. Remove cover from control arm 1/5 (unclip). Remove heating pipe.

Before removing the right drive shaft, disconnect holder from oil line (M6 screw) on transmission. Pull oil line slightly down when removing and inserting drive shaft.

4. Release fastening screws of connector unit/grounding cable and speed sensor from wheel carrier (arrow). Unclip lines from wheel carrier (no. 1) and parking brake cable. Remove speed sensor.

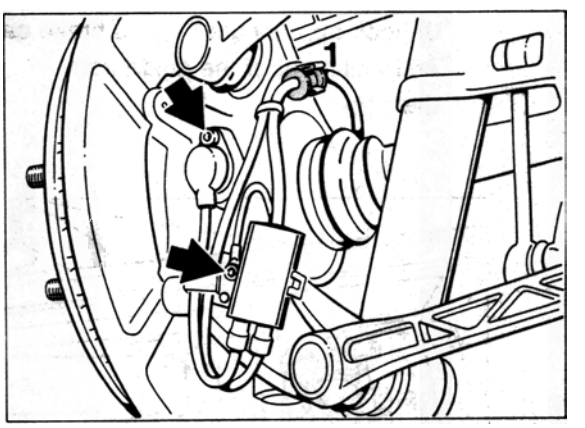

1843-42

5. Remove brake caliper from wheel carrier and hang it up in wheel arch.

6. Disconnect stabilizer mount from stabilizer (holding open jaw wrench against bolt).
Remove stabilizer clamp.

Note

The stabilizer mount must remain attached to the spring strut. The stabilizer must **not** be removed.

7. Dismantle parking brake cable.
   To do so:
   - Remove cassette box and trim panel above parking brake lever.
   - Loosen and completely unscrew lock nut and adjustment nut (No. 1) from arm (No. 2).

     Remove safety clip (No. 3) from support pin (No. 4) of parking brake lever and remove support pin.

   - Remove parking brake lever (with arm)

   - Unhook tab washer (no. 5) for parking brake cables from retaining lug (No. 6) - at top and bottom.

   - Unhook appropriate parking brake cable and pull it out of the guide from the back.

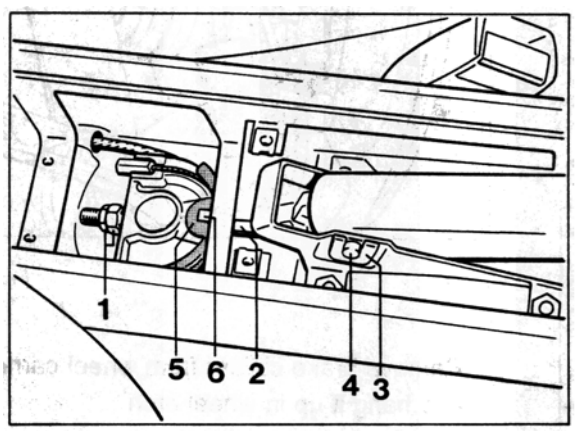

1844-42

8. **Remove** control arm **2** (toe control arm).
   Caution: Before loosening the bolts, **mark** the position of eccentric bolt **A** for installation, so that a complete **measurement of vehicle alignment is not necessary.**
   When loosening the ball joint, hold a Torx screwdriver (special tool 9546) against the wheel carrier.

Note

If necessary for removing **control arm 2** from the wheel carrier/spring strut eye, lift the wheel carrier slightly using a universal jack.

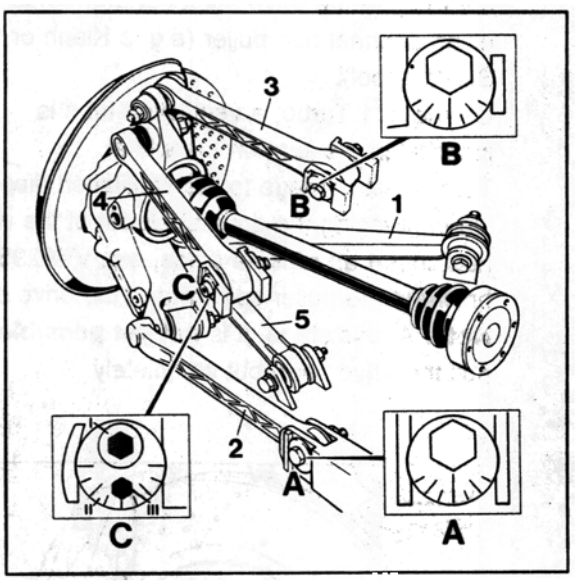

9. Disconnect control arm **1/5** from subframe (internal connection / 2 screws).

10. Unscrew pan head screws of drive shaft from transmission flange.

Note

To prevent damage to the drive shaft, place a protective tube on the drive shaft.

11. Mount a suitable lever on the wheel hub. Using the lever, lift the wheel carrier and swing it out at the bottom. Pull out the drive shaft in this position (2nd mechanic required).
    Depending on tolerances, it may also be necessary to turn the wheel carrier in the direction of toe-in with the lever.

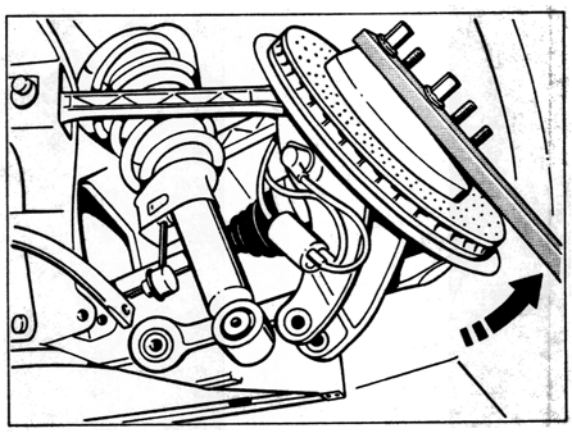

2085-42

Installation

1. To install the drive shaft, proceed in reverse order. Carry out a visual inspection of all parts before starting installation.
   Grease the drive shaft teeth with Optimoly HT. First step:
   Insert the drive shaft.

2. Check thread condition and **grade** of eccentric bolt.
   Required grade 10.9 (grade first used 8.8 / check spare parts catalog). The grade is shown on the bolt head.
   If thread is damaged or bolt is grade 8.8, use new eccentric bolt.
   In this case, transfer position mark from old eccentric bolt to new bolt.

3. Do not grease Dacromet bolting (aluminum appearance). **Observe torque specifications.**
   Caution: For tightening bolting on subframe, note item 4 (page 42 - 20).

4. Tighten bolts in area **A** (eccentric bolt) and bolt of control arm **5** in **reference position**).
   Reference position: Control arm 2 and the rear cross member must form a horizontai line. To establish **reference position,** lift wheel carrier with universal jack.

Note

The bolts mentioned above can also be tightened when the vehicle is on its wheels and has been pushed up and down about 25 mm a few times.

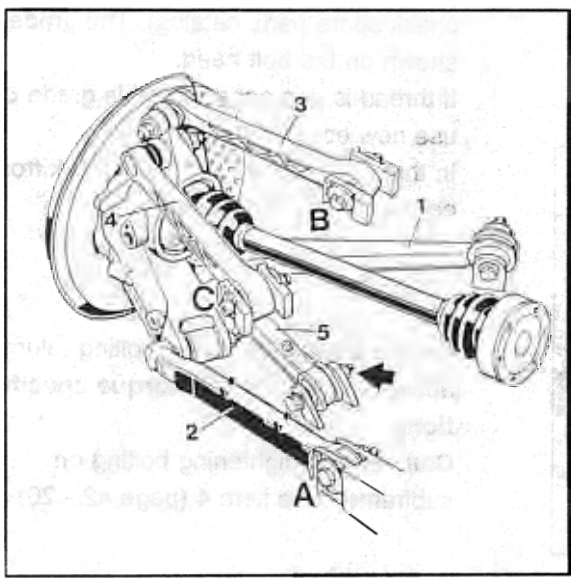

5. Install parking brake cable and adjust parking brake (p. 46-13).
   Install brake caliper.

6. Tighten drive shaft on transmission flange and wheel hub. Use new fastening nut.

7. Install cover of control arm 1/5 and the underside guards and panels.

Note

If drive shafts are installed and removed in accordance with these instructions, alignment measurements are not necessary as there are only minor changes in wheel alignment. The max. change in toe-in per rear wheel is 5'.

42 71 19 Removing and installing rear spring strut

Removal

1. Remove rear wheel, engine guard from engine/transmission and rear underside panel.

2. Disconnect stabilizer mount from stabilizer (holding open jaw wrench against bolt). The stabilizer mount must remain attached to the spring strut. Remove stabilizer clamp.

3. Loosen control arm **2** (toe control arm) (do not remove it completely at this state.
Procedure:

Mark the position of eccentric bolt **A** (eccentric toe bolt) for installation.
Then swing the eccentric bolt and control arm 2 out of the cross member from below.

Loosen control arm 2 from wheel carrier (do not remove control arm yet. When loosening the fastening nut hold Torx screwdriver (special tool 9546) against the ball joint bolt.

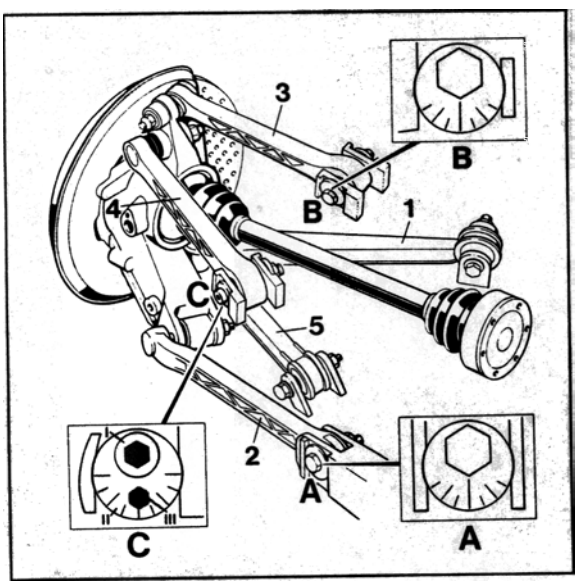

1445A-44

4. To prevent damage to the drive shaft, place a protective tube on the drive shaft (the drive shaft may rest on the subframe (rear axle side part) after removal of the spring strut).

5. To remove the left spring strut, first remove the heater blower. To remove the right spring strut, first remove the air filter.

6. Release M 8 fastening nuts (4 in all) from spring strut mount.

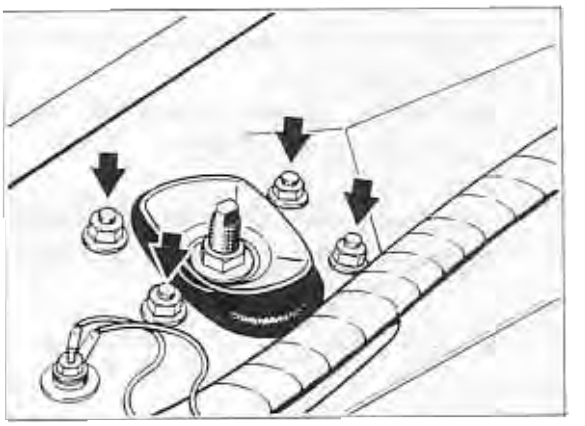

2086-42

7. Now remove control arm **2** completely and pull spring strut out of spring strut dome.

Installation

1. Do not grease bolts or screws.
Observe torque specifications.

2. Mount spring strut on body.
Use new fastening nut.
Precise compliance with the specified tightening torque of 33 Nm (24.5 ftlb) is essential.

3. Install heating blower or air filter.

4. Mount spring strut on wheel carrier.
(Insert control arm 2).

5. Install **control arm 2** on cross member.

Note

Before installing control arm 2 on cross member, check thread condition and **grade** of eccentric bolt. **Required grade 10.9** (grade first used 8.8 / check spare parts catalog). The grade is shown on the bolt head. If thread is damaged or bolt is grade 8.8, use new eccentric bolt..
In this case, transfer position mark from old eccentric bolt to new bolt.

Caution: Before tightening the eccentric bolt (area A), read the following instructions.

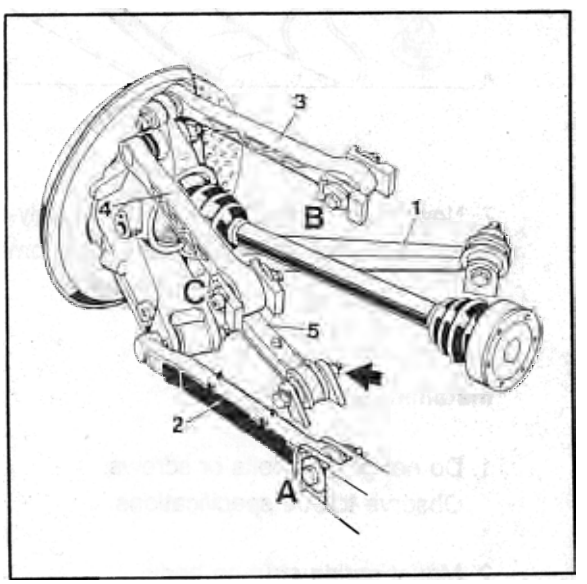

1845-42

6. Tighten eccentric bolt (area A) in **reference position**.
Reference position: Control arm 2 and the rear cross member must form a horizontal line.
To establish **reference position,** lift wheel carrier with universal jack.

Note

The eccentric bolt can also be tightened when the vehicle is on its wheels and has been pushed up and down about 25 mm a few times.

7. Following the installation of new parts which affect vehicle height, a suspension alignment check must be made.

8. Install underside guards and panels.

42 Dismantling and assembling rear spring strut

Tools

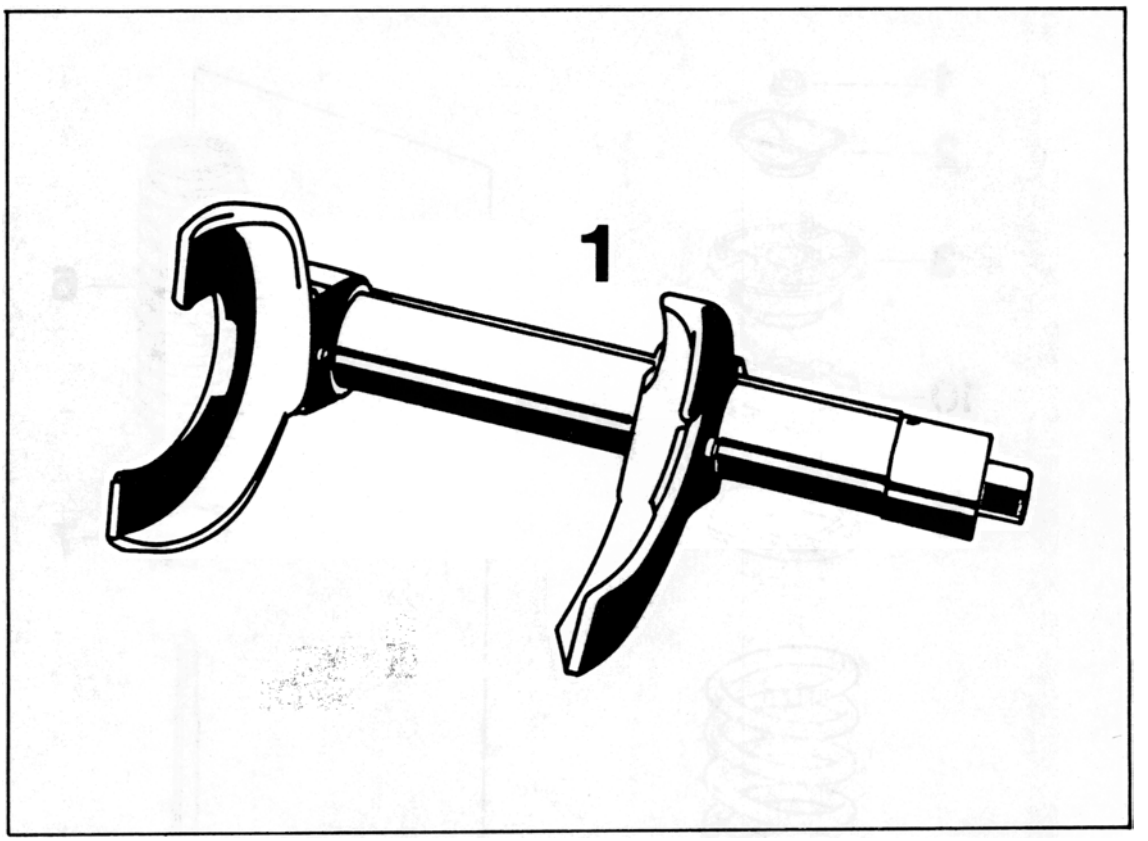

No.	Designation	Special tool	Order Number	Explanation
1	Spring compressor tool e.g. Klann tool			proprietary

42 Dismantling and assembling rear spring strut

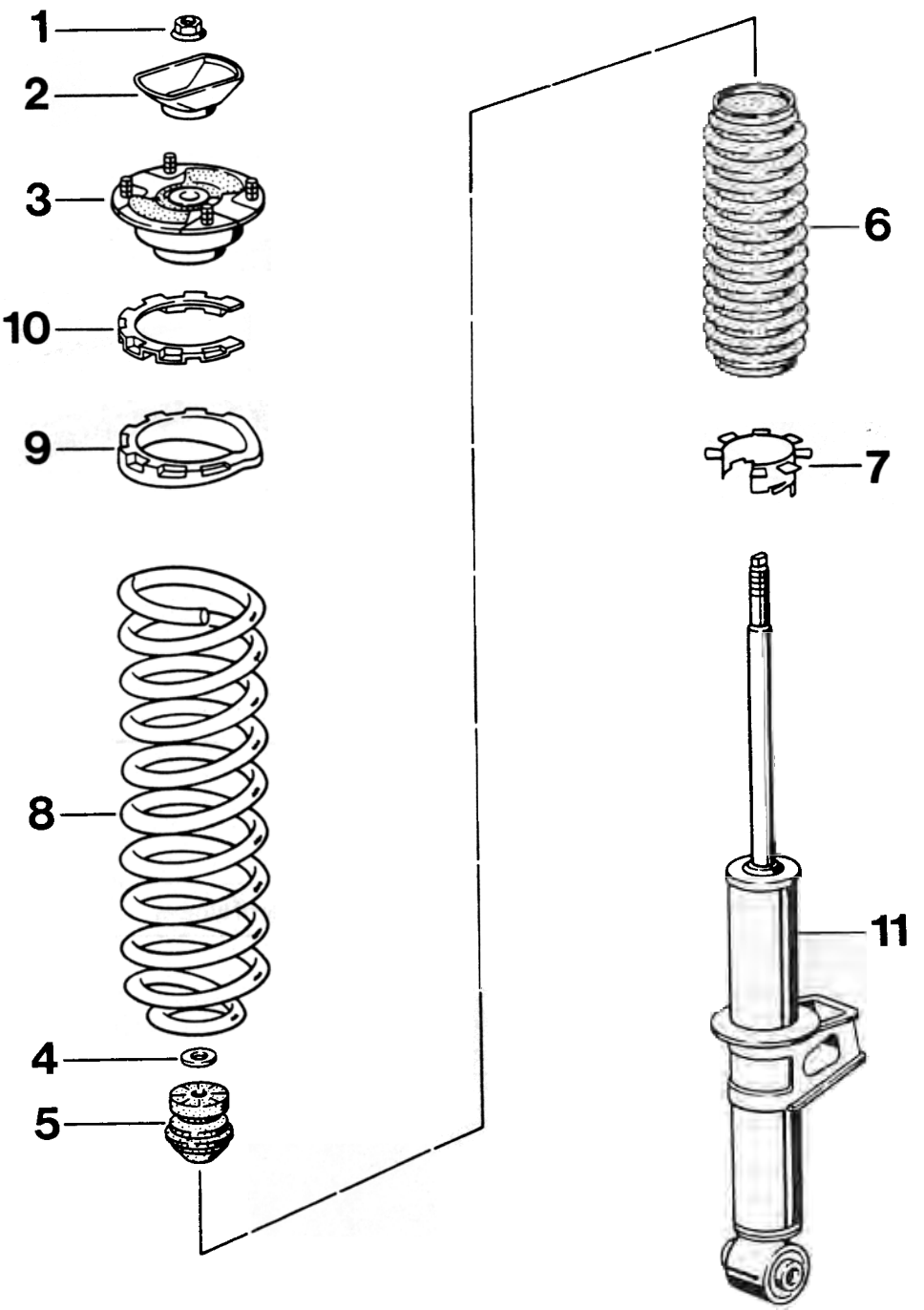

No.	Designation	Qty.	Note: Removal	Installation
1	Fastening nut M 12 x 1.5	1	Before loosening fastening nut, compress coil spring using coil spring compressor tool. When loosening nut, hold wrench against piston rod.	Use new fastening nut. Tighten to 58 Nm. **Firstly,** position shock absorber eye correctly relative to spring strut mount (No. 3). (Page 42-30).
2	Stop plate	1		Install in correct position (3 recesses).
3	Spring strut mount	1	Remove complete assembly (mount with intermediate section (7) and spring support (9)).	Mounts for left and right sides are identical. Mounts are marked R=right and L=left for positioning (see p. 42-30).
4	Washer	1		
5	Helper spring	1		Mount on bellows (6).
6	Bellows	1		
7	Mount (support clip)	1		Install in correct position (p. 42-29). First, position the coil spring on the shock absorber.
8	Coil spring	1		Observe allocation in spares catalog.
9	Spring support	1		

Printed in Germany -10. 1995

No.	Designation	Qty.	Note: Removal	Installation
10	Intermediate section	1		Observe allocation (p. 24-27). Install in correct position with spring support (p.42-28).
11	Shock absorber	1		Observe allocation in spares catalog. For difference between right and left part see p. 42-28.

Notes on assembly and dismantling

Dismantling

Compress coil spring using a coil spring compressor tool until the piston rod is unloaded.

To loosen the bolting between piston rod and spring strut mount, hold a 7 mm open-end wrench against the piston rod.
Caution: Do not under any circumstances use a power impact wrench to loosen or tighten the fastening nut.

Remove all parts from the piston rod.

Note

When installing new parts, follow the allocation given in the spares catalog.

Preparatory work and notes on assembly

- Use new fastening nut when attaching piston rod to spring strut mount.

  Vibration dampers of different makes must not be installed on the same axle.

- It is recommended that coil springs always be replaced in pairs.

Note

If new coil springs are installed, it may be necessary to use a different intermediate section.
Intermediate sections with the following thicknesses are available:
3.0 mm, 5.5 mm and 8 mm.

Select the intermediate section in accordance with the tolerance group of the coil spring (color coding/colored lines on spring).

1 line = 8.0 mm intermediate section
2 lines = 5.5 mm intermediate section
3 lines = 3.0 mm intermediate section

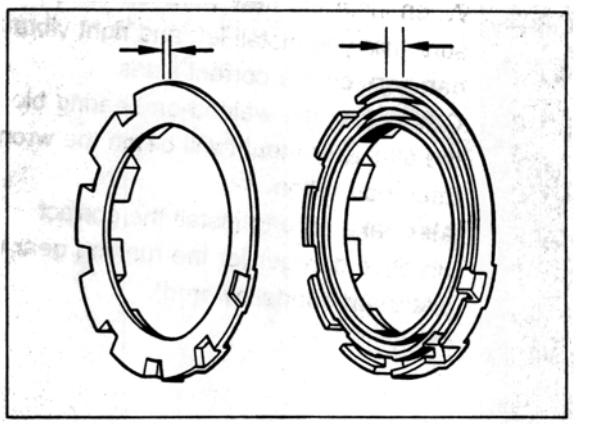

2087-42

Press intermediate section (10) into the correct position in the spring support (9) and install spring strut mount (3).
In the correct position, no recess (A) on the spring support must be left vacant.

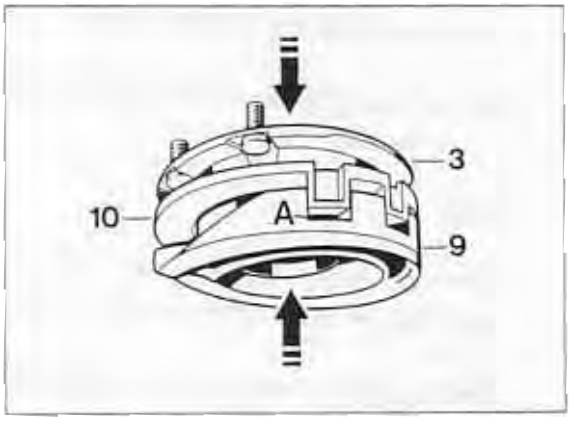

2089-42

Install bellows on helper spring.

– Position **vibration damper** at eye in vise (use protective jaws).

Note

When installing new vibration dampers, make sure that you install left and right vibration dampers on the correct sides.
Otherwise, the welded-on bearing block for the stabilizer mount will be on the wrong side after installation.
Also take care to install the correct vibration damper for the running gear version (standard/sports/lowered).

Distinguishing features of left and right vibration damper

Spare part for left side -
odd third group in part number

Spare part for right side -
even third group in part number

Example

Part no. for left vibration damper:
993.333.051.00

Part no. for right vibration damper:
993.333.**052**.00

– Compress coil spring using coil spring compressor tool.

Assembly

Position end of coil spring on vibration damper stop (arrow).

Press support clip (7) through bottom winding of spring, taking care that the two tabs are in the correct position.

Push helper spring/bellows assembly onto piston rod.

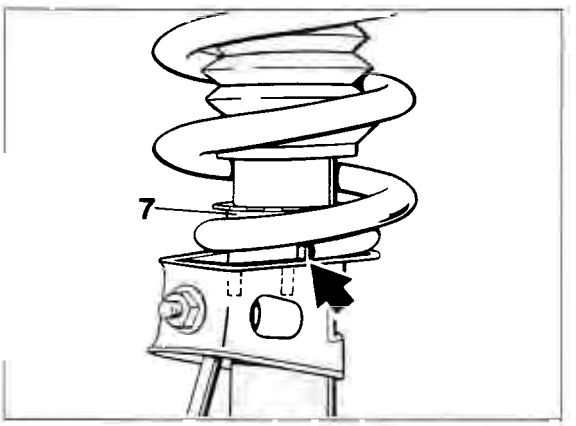

2090-42

Push washer (arrow) onto piston rod up to stop.

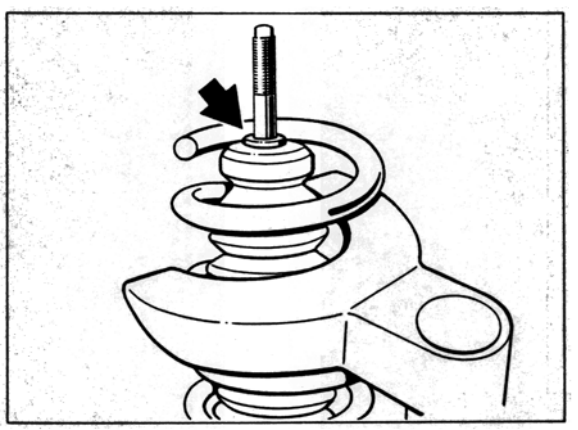

2091-42

– Position spring strut mount (mount/intermediate section/spring support assembly) on piston rod in such a way that the end of the coil spring touches the stop on the spring support (arrow).

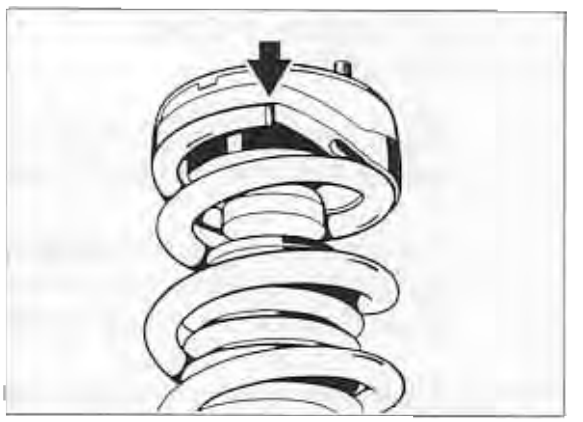

2092-42

– Position stop plate correctly (three recesses) on spring strut mount. Tighten fastening nut (use new part) onto piston rod **until about 1 or 2 turns of the thread** can still be seen above the nut.

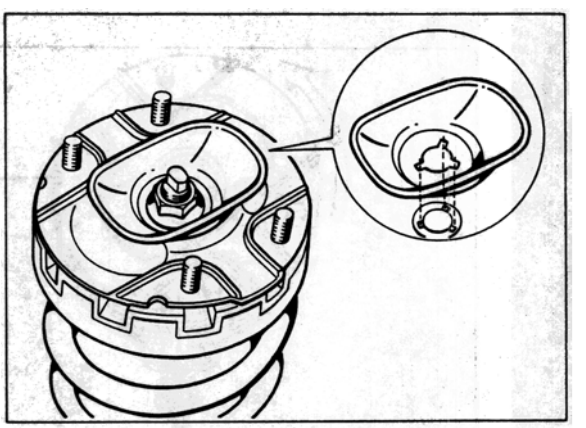

2093-42

– **Position spring strut mount as follows** (position spring strut mount correctly relative to shock absorber eye).

  The left and right spring strut mounts are identical. There are therefore **two** markings on the mounts, **R (Right)** and **L (Left)**.

  Before positioning, check whether you are positioning a left or right shock absorber.

  The **right mount** is correctly positioned if the marking **R (Right)** is in line with the center of the stabilizer mount ball joint bolt.

  The **left mount** is correctly positioned if the marking **L (Left)** is in line with the center of the stabilizer mount ball joint bolt.

  To position the mount, turn it to the right. Turn the mounting bolt using a suitable lever.
  Caution: Only turn it to the right (clockwise) and only turn the spring strut mount. Do not under any circumstances turn the spring support.

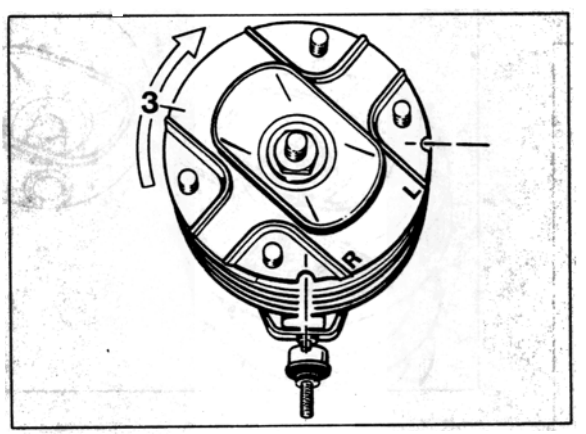

2094-42

– After the spring strut mount has been positioned correctly and the coil spring is in contact with the stops, tighten the fastening nut. To tighten the fastening nut, hold a 7 mm open-end wrench against the piston rod. Tightening torque: 58 Nm, (43 ftlb.).
  Caution: Do not under any circumstances use a power impact wrench to tighten the fastening nut.

42 Carrera RS - Disassembling and assembling spring strut, rear

Disassembling

Remove plug no. 1 using the **modified** special tool VW 457 (see note on page 42-33).

- Preload coil spring using a spring tensioning device – e.g. by Klann –, until there is no load on the piston rod.

To separate the connection - piston rod to spring strut mount - use a 7 mm open-jawed wrench for locking the piston rod.
Important: Do not use an impact screw-driver to slacken and tighten fastening nut no. 2.

Remove all parts from the piston rod.

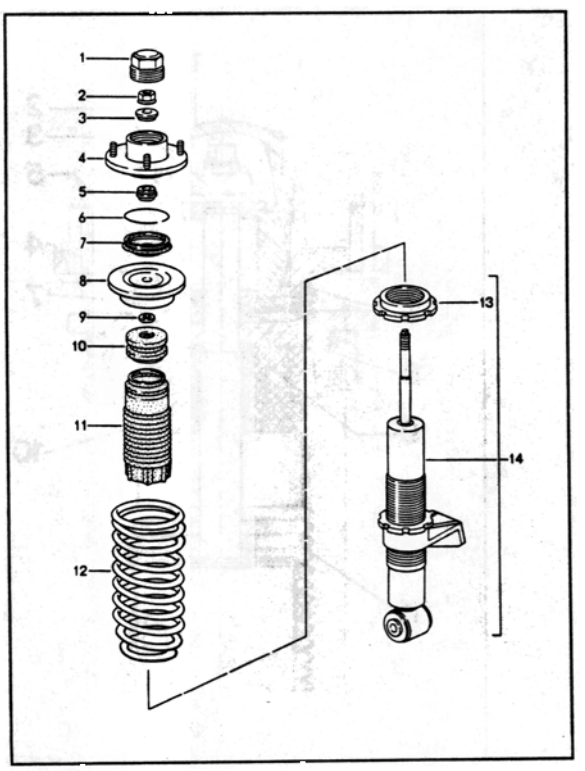

2346-42

Preliminary work and assembly notes

- Observe parts assignment according to the spare parts catalog when installing new parts.
- Replace fastening nut no. 2 (ribbed collar nut).
- It is recommended to replace the coil springs in pairs.
- When replacing the vibration damper, set nut no. 11 for height adjustment **to the same position** as on the old vibration damper (transferring adjusting dimension to the new damper).
  Apply Optimoly **TA** to the thread of the adjusting nut.

Note

On spare dampers, the stabilizer mount (arrow) is pre-set. For adjusting dimensions and notes see page 4 - 4.

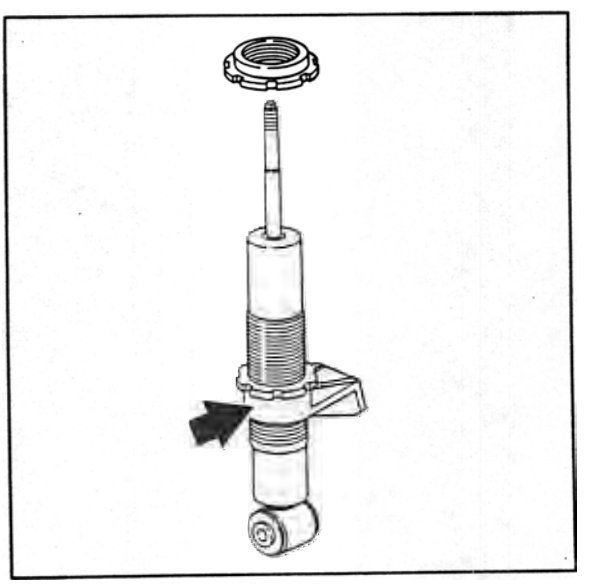

2346/1-42

– Fit protective bellow to additional spring.

Mount shock absorber eye onto a vise to clamp **vibration damper** (use protective jaws).

Preload coil spring using spring tensioning device.

On mounts that have run dry, the bearing cup can be greased using Autol Top 2000.
Manufacturer:
Autol-Werke
Paradiesstr. 14
97080 Würzburg
Germany

Assembling

– Push the assembly consisting of protective tube and additional spring onto the piston rod.

– Push shim no. 9 onto the piston rod up to the stopper.

– Fit coil spring to vibration damper.
The narrow winding of the spring coil must face the spring strut mount.
Fit spring retainer no. 8 to the end of the coil spring.

– Fit spring strut mount (assembly of mount no. 4 / spacer sleeve no. 5 / bellows no. 7 / retainer spring no. 6) to the piston rod.
Imporant: Observe installation position of spacer sleeve no. 5.

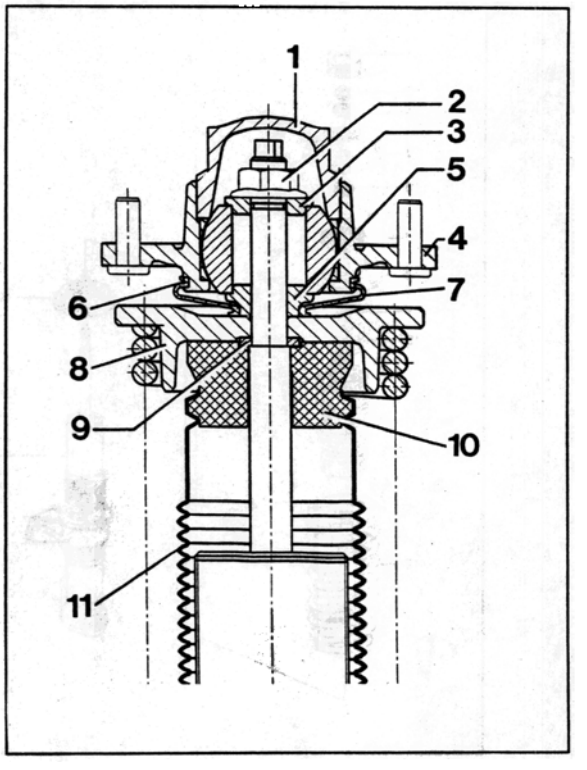

2350-42

– Fit spacer sleeve no. 3 **in correct position**. Turn **new** fastening nut (collar nut) on the piston rod. Use a 7 mm open-jawed wrench for locking the piston rod when tightening the fastening nut.
Tightening torque 58 Nm.
Important: Do not use an impact screwdriver to tighten the fastening nut.

– **Install new plug (arrow).**
The thread of the mount must not contain any residuals (stemming from the microencapsulation). Furthermore, the thread must be fat-free. To tighten the plug with a tightening torque of 180 Nm, screw the modified special tool VW 457 to the spring strut mount, then load the special tool on a vise.
The modifications to the special tool are described at the end of this page.

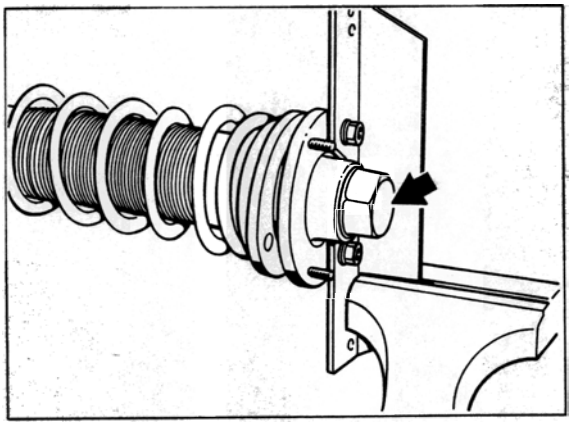

2374-42

– Position the **spring strut mount for installation** (observe correct position of the spring strut mount relative to the shock absorber eye).
Important: Do not damage the bellows no. 7 when turning the mount. If necessary, turn the bellows as well when turning the mount.

Modifications to special tool VW 457

To modify the special tool, **drill two holes** into a take-up rail applying the following dimensions.

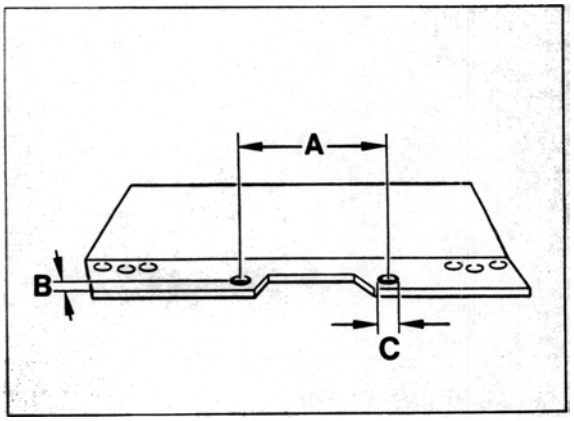

2375-42

A = 83.15 mm

B = 10 mm

C = 8.5 mm Ø

44 Wheels and tires

Tire condition / tire pressure

Tires are safety-relevant items that are only capable of meeting the requirements imposed if they are run at the correct tire pressure and with sufficient tread depth.

The tire pressures indicated are minimum pressures. The tires must never be run at lower pressures since this affects roadholding adversely and may lead to severe tire damage.

Valve caps protect the valve against dust and dirt and therefore help prevent leaks. Always screw on caps tightly and replace missing caps.

For safety reasons, do not limit tire checks to checking the tire pressure but also check for sufficient tread depth, ingress of foreign objects, pinholes, cuts, tears and bulges in the sidewall (cord breakage)!

Tire pressure of cold tires (approx. 20° C.)

911 Carrera / 911 Carrera S / 911 Carrera 4 and 911 Carrera 4S (Turbo-Look)

16-inch wheels
(Summer tires and winter tires)

front	2.5 bar excess pressure
rear	3.0 bar excess pressure

17-inch wheels
(Summer tires and winter tires)

front	2.5 bar excess pressure
rear	2.5 bar excess pressure

Collapsible spare tire

front/rear	2.5 bar excess pressure

911 Carrera RS (M 002 / M 003)

M 002 = basic version /
M 003 = Clubsport version

Summer and winter tires

(Winter tires = 17-inch wheels
summer tires = 18-inch wheels)

front	2.5 bar
rear	3.0 bar

Folding spare wheel

front / rear	2.5 bar

Tire and wheel survey

For a tire and wheel survey for summer and winter tires, refer to the relevant Technical Information (TI), Group 4.
When replacing summer tires, you must ensure that the specification number is correct.
The specification no. N2, N1 or N0 distinguishes summer tires which have been specially approved by Porsche from other tires of the same type and size.

Notes on tire fitting

When fitting tires, make sure that they are installed in the correct dircetion, i.e. with the inside facing inwards etc.

Mounting wheel on vehicle

See page 44-24.
Tighten to 130 Nm (96 ftlb)

Printed in Germany - 20, 1997

44 Suspension alignment settings

The following specifictions refer to the curb weight to DIN 70020. This means: Full fuel tank, spare tire and tools in vehicle.

Differing settings for U.S. vehicles are given in brackets.

Carrera RS versions: M002 = basic version / M003 = Clubsport version
Information on alignment of the Carrera RS: Page 44 - 19 ff.

Vehicle height

		RoW: Standard (USA: Standard)	RoW: Sport (USA: Sport)	Carrera S /4S RoW (Carrera S /4S USA	Carrera RS M002/M003
Front-axle height From road contact surface to outer hexagon head bolt of "cross member to body" mounting (as on 964) Fig. – Measuring point p. 44-12	mm	154 ± 10 (174 ± 10)	144 ± 10 (174 ± 10)	144 ± 10 (174± 10)	124 ± 10
Max. left-to-right difference	mm	5	5	5	5
Rear-axle height from road contact surface to rear mating face of bottom of subframe Fig. – Measuring point p. 44-12	mm	147 ± 10 (157 ± 10)	127 ± 10 (157 ± 10)	127 ± 10 157 ± 10)	107 ± 10
Max. left-to-right difference	mm	5	5	5	5
Max. front axle to rear axle height difference (also refer to p. 44-11 in General section)	mm	10	10	10	10
Max. left-to-right wheel load difference on front and rear axle	kg	20	20	20	20

Suspension values

The following specifications refer to the curb weight to DIN 70020. This means: Fuel tank full, spare wheel and tools in vehicle.

Differing settings for U.S. vehicles are given in brackets.

Carrera RS versions: M002 = basic version / M003 = Clubsport version
Information on alignment of the Carrera RS: Page 44 - 19 ff.

Front axle

	RoW: Standard (USA: Standard)	RoW: Sport (USA: Sport)	Carrera S / 4S RoW (Carrera S/ 4S USA)	Carrera RS M002/M003
Toe, unpressed (total)	+ 5' ± 5'	+ 5' ± 5'	+ 5' ± 5'	+ 5' ± 5'
Toe difference angle at 20° steering lock	– 1° ± 30' (– 40' ± 30')	– 1° 45' ± 30' (– 40' ± 30')	– 1°45' ± 30' (– 40' ± 30')	– 1°27' ± 30'
Camber (with wheels in straight-ahead position)	– 20' ± 10'	– 20' ± 10'	– 20' ± 10'	– 1° ± 10'
max. left-to-right difference	10'	10'	10'	10'
Caster*	5°20' + 15' – 30'	5°20' + 15' – 30'	5°20' + 15' – 30'	5°20' + 15' – 30'
max. left-to-right difference	15'	15'	15'	15'

Try to achieve the specified caster setting (5°20')

Printed in Germany 20 1997

Suspension alignment settings

The following specifications refer to the curb weight to DIN 70020. This means: Fuel tank full, spare wheel and tools in vehicle.

Differing settings for U.S. vehicles are given in brackets.

Carrera Rs versions: M002 = basic version / M003 = Clubsport version
Information on alignment of the Carrera RS: Page 44 - 19 ff.

Rear axle

	RoW: Standard (USA: Standard)	RoW: Sport (USA: Sport)	Carrera S / 4S RoW (Carrera S / 4S USA)	Carrera RS M002/M003
Toe per wheel	+ 10' ± 5'**	+ 10' ± 5'**	+ 10' ± 5'	+ 15' ± 5***
max. left-to-right difference	10'	10'	10'	10'
Camber	– 1° 10' ± 15'**	– 1°10' ± 15'	– 1°10' ± 15'	–1°20' ± 10'
max. left-to-right difference	20'	20'	20'	20'
Kinematic toe-in change max. difference between steering arm angle 2 and steering arm angle 5	1.5 SKE*	1.5 SKE*	1,5 SKE*	1,5 SKE*

* SKE = scale unit. Measure and read off in center of bubble level.

** Changed values are also retroactive in effect (as of start of series).
Previous values: toe setting per wheel = + 15' ± 5' / camber = – 55' ± 15'

***The ideal value (+ 15' per wheel) should be aimed for.

Printed in Germany 09.1997

44 Measuring card

Important notes

Since electronic wheel alignment equipment combined with printers is used virtually in all workshops today, a sample measuring card is hardly ever required anymore.

To allow the measuring results to be documented in specific isolated cases, a copy of the measuring card shown on page 44 - 6a may be used.

The measuring cards can be used for all 911 vehicles from model '94, including 911Carrera (993), 911 Carrera 4 (993), 911 Turbo (993) and 911 Carrera RS (993).

The following fact should therefore be observed during operation

Measuring cards cannot be ordered for the 911 Carrera (993), **model '94 onward**

Make a copy of the measuring card shown on page 44 - 6a.

Before making measurements, enter general data, vehicle version and the missing specifications (page 44 - 3 to 44 - 5) in the copied measuring card.
Actual values that are identical for all versions have already been entered into this card.

Make **as-received measurement** (actual condition) and enter readings into the measuring cards.

After adjustment (if required), enter actual values into the **Measurement as delivered** column.

Porsche Suspension Alignment

Customer No.:	Repair Order No.:
Customer:	Vehicle Identification No.:
Street:	Registration No.:
Town:	Date of 1st registration:
Phone:	Mileage: km/miles
Measurement made by:	Date / signature

Vehicle: Porsche 911 from model 94 (993) **Version:**

Measuring requirements (Vehicle weight): Curb weight to DIN 70020.

This means: Full fuel tank, spare wheel and tools in vehicle.

Reason for measurement:

Tire make: Size/type: Front Rear

	Front left	Front right	Rear left	Rear right
Tire pressure (cold tires) bar				
Tire/wheel (possibly damaged) Tire - tread depth (mm)				

			Measurement **as received**	Specifications max. difference LH/RI	Measurement **as delivered**
Vehicle height / wheel load	Height/wheel load front (mm / kg)	left / right	/ /	5 mm / 20 kg	/ /
	Height/wheel load rear (mm / kg)	left / right	/ /	5 mm / 20 kg	/ /
Rear axle	Camber	left / right		20'	
	Toe-in	left / right		+0°10'/ +0°05' - 0°05' (not valid for RS)	
		total		+0°20'/ +0°10' - 0°10 (not valid for RS)	
	Kinematic toe-in correction	left	scale units*	Angular diff. **L2 / L5**	scale units*
		right	scale units*	max. 1.5 scale units*	scale units*
	Driving axis angle			+0°00'/ +0°10' - 0°10'	
Front axle	Caster	left / right		+5°20'/ +0°15' - 0°30' 15'	
	Toe difference angle	left / right			
	camber	left / right		10'	
	Toe-in	left / right		+0°03'/ +0°03' - 0°03'	
		total		+ 0°05'/ + 0°05' - 0°05'	

* SKE = scale units. Special tools 9549 and 9550 are needed for measurement. The reading must be taken at the center of the level (bubble).

44 Alignment of complete suspension

Tools

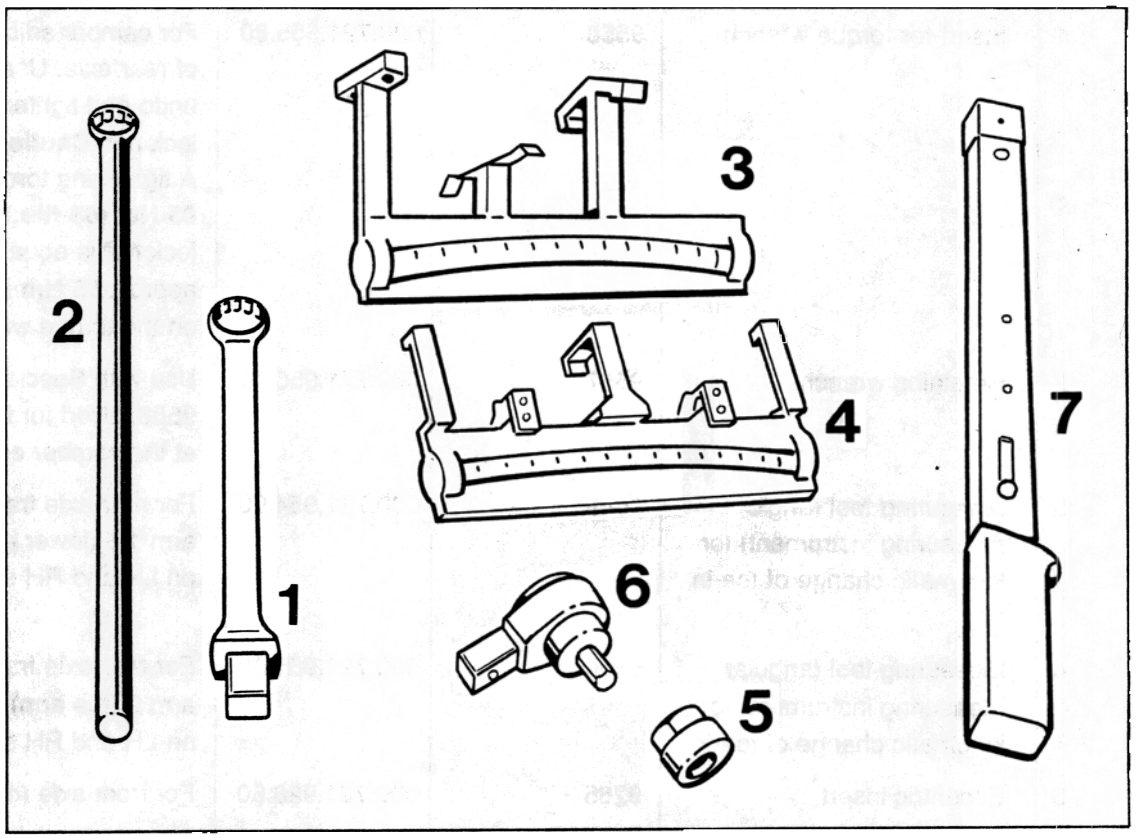

1442-44

Tools

No.	Designation	Special tools	Order number	Explanation
1	Insert for torque wrench	9558	000.721.955.80	For camber adjustment of rear axle. Used to undo and tighten the lock nut. **Caution:** A tightening torque of **85 Nm (63 ftlb.)** of the lock nut is equal to approx. **65 Nm (48 ftlb.)** on the torque wrench
2	Retaining wrench	9557	000.721.955.70	Use with Special Tool 9558. Used for locking at the camber eccentric
3	Measuring tool (angle measuring instrument) for kinematic change of toe-in	9549	000.721.954.90	For rear-axle trailing arm 1/5 (lower arm) on LH and RH side
4	Measuring tool (angular measuring instrument) for kinematic change of toe-in	9550	000.721.955.00	For rear-axle trailing arm 2 (toe arm) on LH and RH side
5	Eccentric insert	9265	000.721.926.50	For front axle (camber)
6	Reversible ratchet	9265/1	000.721.926.51	For front axle (camber)
7	Torque wrench			Standard, to be used with nos. 1 and 6. **Caution: Observe tightening torque modification for insert no. 1**

Suspension alignment

General

The main difference of the suspension alignment of the 911 Carrera (993) with regard to that of the 911 Carrera 2/4 (964) is in the operating procedures for the rear axle.
Except for minor details (new tie-rods, steering gear, different settings and tightening torques), the adjustment procedures are the same as on the 911 Carrera 2/4 (964).

In addition to toe-in and camber, the **kinematic toe-in change** must also be checked and adjusted, if required, by changing the steering arm position (steering arm angle) on the new multi-link rear axle. This **additional** (indirect) measurement is performed with Special Tools **9549 and 9550** mounted to arm 1 / 5 (lower arm) and arm 2 (toe arm). The specified adjustment sequence must be observed at all times (p. 44 - 13).

Also make sure that the max. admissible front-to-rear height difference of 10 mm is not exceeded. No specifications exist for older models.

Check wheel alignment with an optical or electronic alignment tester. The measuring procedures are described in the operating instructions of the alignment tester used. The following requirements must be fulfilled prior to checking the suspension alignment:

Vehicle at curb weight according to DIN 70020, i.e. vehicle is roadworthy, with full fuel tank, spare wheel and tools

Drive joint and wheel bearing clearance must be correct (wheel bearing clearance cannot be adjusted)

- Specified tire pressure, fairly even tread depth.

If both the front and rear alignment has to be checked, **start by checking and adjusting the rear wheel alignment.** The camber specifications for the front axle refer to the straight-ahead position of the wheels. When adjusting the camber setting, steering wheel and steering gear must be in center position.

Before adjusting the suspension settings of the front and rear axles, make sure* the height adjustment is checked with the vehicle at DIN curb weight. If wheel load scales are available, the height adjustment feature allows the left-to-right wheel load difference to be kept to a minimum. The wheel load difference is adjusted by modifying the height tolerance. The left-to-right wheel load difference should preferably kept as small as possible.

* after operations that cause changes in height or if the height was incorrect.

Important information for suspension alignment operations

When checking/adjusting the suspension alignment, observe the following items:

Height adjustment/wheel load change

Changing the height on one side will simultaneously cause a change in wheel load. **A wheel load change on one wheel will also change the wheel loads of the other wheels.**

The wheel load is increased by increasing the installed spring preload on one side (raising the vehicle).

The wheel load is reduced by reducing the installed spring preload on one side (lowering the vehicle).

Wheel load changes are always transmitted diagonally on the other side of the axle. In other words, when the wheel load is reduced or increased on one wheel, the same happens on the diagonally opposite wheel.

Example

Front right spring preload B is increased.

This causes the wheel load

- to increase at the left rear C and right front B
- to decrease at the right rear D and left front A

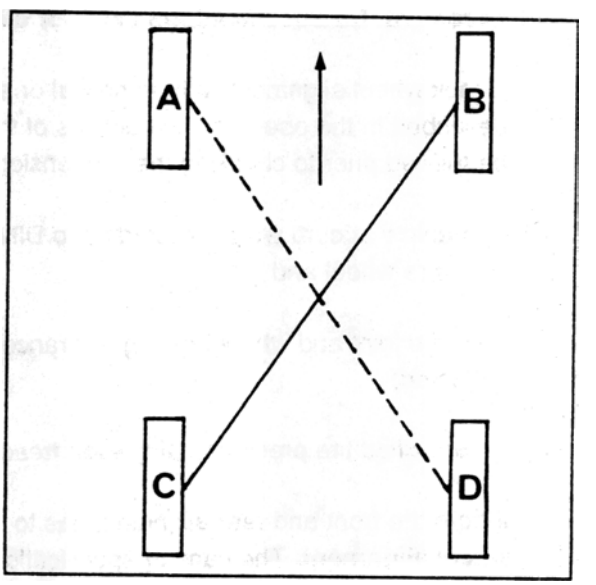

44-3

The left to right wheel load difference should be as small as possible on the front and rear axles (less than 20 kg, 44 lbs.) whenever possible).

Checking / adjusting the height

General

Adjust the height **on the front axle** at the adjustment nuts on the lower spring retainer (as on 964).

For height adjustment **on the rear axle,** the strut must be removed to allow other spacers to be inserted at the upper spring retainers.

The **max. admissible front-to-rear deviation of 10 mm from the specified height** must not be exceeded, i.e. the height at the front axle must not be exceeded by 10 mm (full positive tolerance) if the height at the rear axle is 10 mm below the specification (full negative tolerance). **The general rule is:** Use the mean value of the front-axle measurements **vs.** the mean value of the rear-axle measurements as a basis for calculation.

Note

The height adjustment feature of the front axle may be used to:

1. Correct differences in the left-to-right wheel loads. When the height is correct, the wheel load differences are within a specified range if the coil springs of each axle have an identical installation length (installed spring preload).
   Tolerance ± 1 mm.
   Wheel load scales may be used to keep the wheel load differences as small as possible. The left-to-right tolerance on the front and rear axles must be below 20 kg.

2. Any excessive height differences between front axle and rear axle can only be compensated (within the acceptable tolerance range) at the front axle.

Front axle

Park car on a level surface or on the test station to **check the ride level height** (road-worthy vehicle, fuel tank full, with spare wheel and tools in car). Jounce vehicle and rear and front axle 2 or 3 times and let the springs return the car to its normal height.

Measure distance from road contact surface point to bottom of bolt head of outer cross-member-to-body bolt connection.
For front axle and rear axle specifications, refer to page 44 - 3.
The ride level height at the front axle is adjusted by turning the adjusting nut on the lower spring retainer. Use a hook wrench or Special Tool VW 637/2 (lever) for this adjustment.

Adjusting nut (of front axle)
- turn to the right = vehicle is raised
- turn to the left = vehicle is lowered

Rear axle

Measure from road contact surface to rear mating face on the bottom of the suspension subframe! The ride level height of the rear axle is corrected by modifying the spacer thickness at the upper spring retainers.
The struts must be removed for this operation.

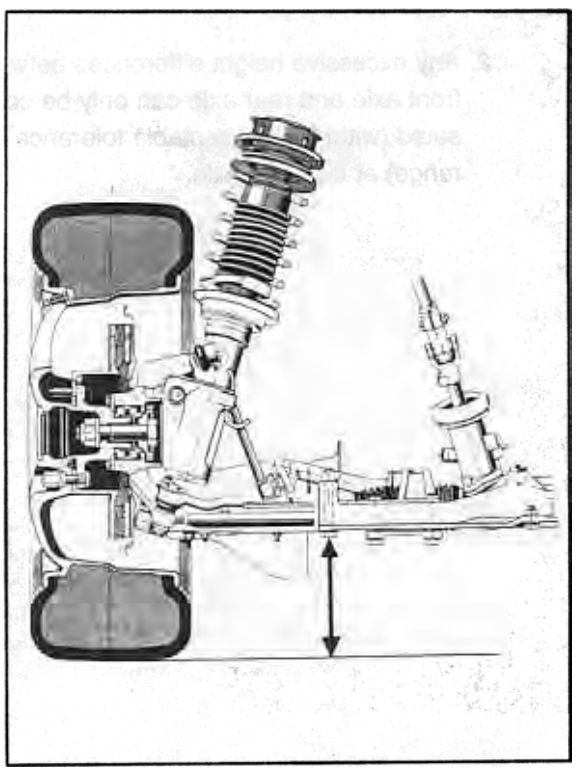

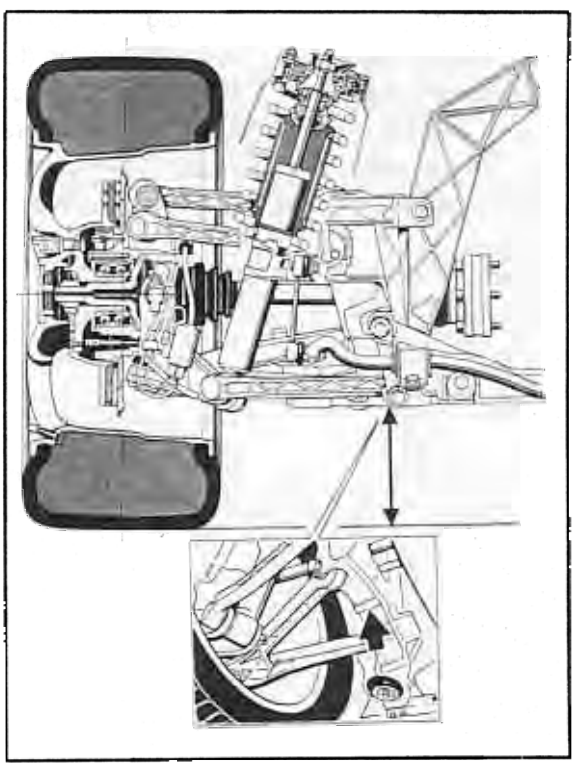

Wheel geometry

Notes

Check and adjust wheel adjustment values only when the specified requirements are met (page 44 – 9, General).

If the wheel alignment is measured at the front and rear, start by checking and adjusting the rear axle.
For specifications, refer to p. 44 - 4 / 44 - 5.
Tighten nuts and bolts to the specified torque after adjustment. For tables, refer to Repair Groups 40 and 42.

Rear axle

Prepare the car for checking and adjusting the wheel alignment values. Place front wheels on rotary tables etc. Jounce vehicle and rear and front axle 2 or 3 times and let the springs return the car to its normal height.

Adjusting sequence (to be observed by all means):

1. **Toe-in**. Adjust at control arm 2 – **eccentric A**.
2. **Camber.** Adjust at control arm 3 – **eccentric B**.
3. **Kinematic change of toe-in.**
Adjust at control arm 4 – **area C**. To adjust, mount the Special Tools (measuring gauges) 9549 and 9550 to control arm 2 and control arm 5 (page 44-14).
Adjust at control arm 4 – area C – at eccentric washer II.

I = Mounting bolt
II = Eccentric washer
III = Hexagon socket for rotation of eccentric washer no. II.

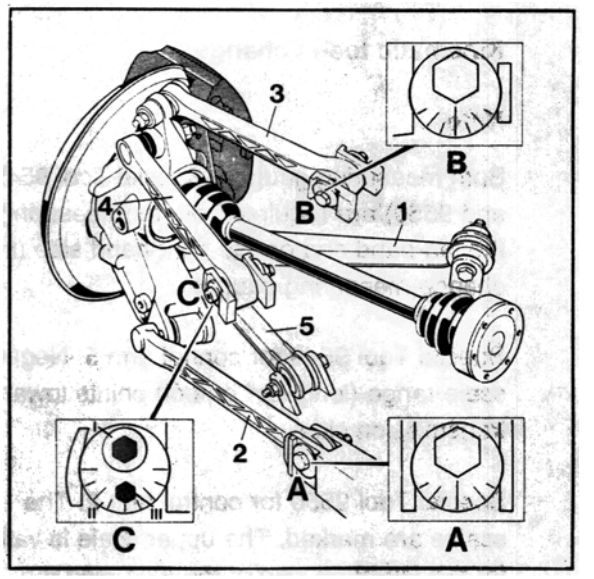

Adjusting toe-in

With the underbody paneling removed, turn eccentric A as required.
If **only the toe-in** has to be corrected (camber o.k.), the kinematic toe-in change **does not** have to be checked.

Adjusting camber

Remove cover of control arm 1/5 (bottom control arm). Rotate eccentric B as required. To undo the lock nut, use Special Tool **9558** in conjunction with a torque wrench. Use Special Tool **9557** to lock at eccentric B.
If the camber setting has been corrected, the kinematic toe-in change will have to be checked as well.
When tightening the lock nut with Special Tool 9558, **observe the following: 85 Nm (63 ftlb.)** at the lock nut corresponds to a setting of **approx. 65 Nm (48 ftlb.)** at the torque wrench.

Kinematic toe-in change

Note

Both measuring gauges (Special Tool 9549 and 9550) are required both for measuring on the left-hand and on the right-hand side (interchange measuring gauges).

Special Tool 9549 for control arm 5. Negative scale range (long end of tool) points towards transmission side.

Special Tool 9550 for control arm 2. The scales are marked. The upper scale is valid for the left-hand side of the axle, and the lower scale is valid for the right-hand side of the axle.

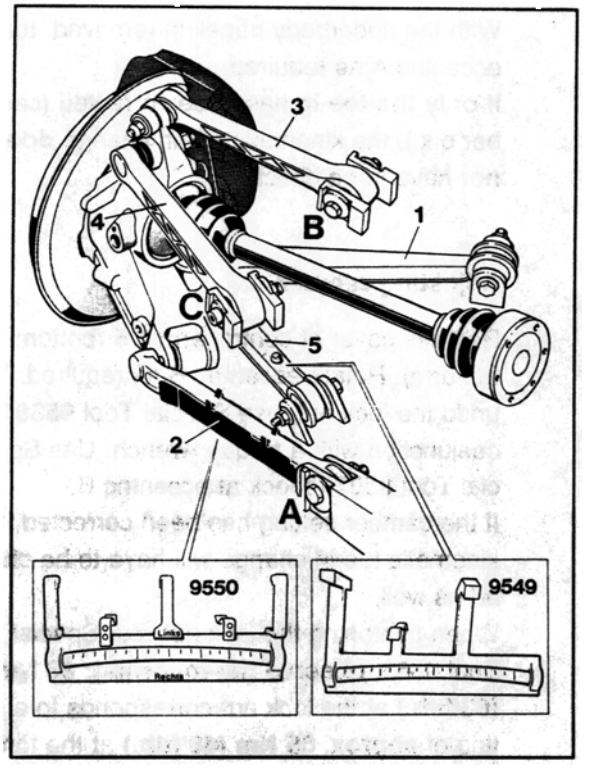

1445A-44

Check **cover of control arm 2** for correct fit. When no excessive force is applied, the cover must not shift by more than 10 mm (move to the left and right by applying only light force). Replace cover if required. Trapezoidal end of cover (arrow) must point towards wheel side.

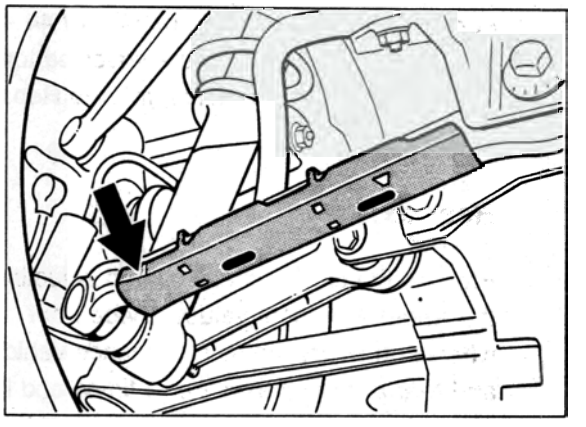

1463-44

Mount **Special Tool 9550 to control arm 2** (measuring surfaces must be free from dirt). 2 cutouts in the control arm cover help to locate the Special Tool correctly (refer to fig. 1463-44).
Center out cover (move to the left and right without applying any force).
Then locate cover in the center position and continue by centering out Special Tool 9550 as well. This prevents the measuring gauge from entering the radius range of the control arm (arrow no. 2) as this would give an incorrect measurement reading.
Also make sure the measuring arms (arrows No. 1) are in perfect contact with the control arm.

Adjusting toe-in

Preliminary operations: Check if the steering wheel is offset with regard to the steering gear by removing the underside paneling and centering the steering gear with Special Tool 9116. Try to achieve the optimum value when repositioning the steering wheel if required. **Then remove Special Tool 9116.**

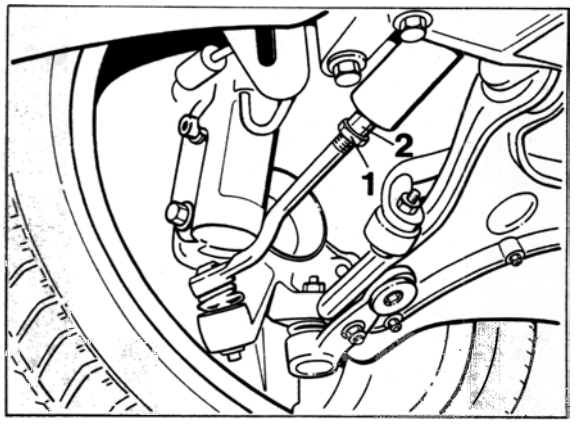

1451A-44

Clamp steering wheel **in center position using the steering wheel holder**.

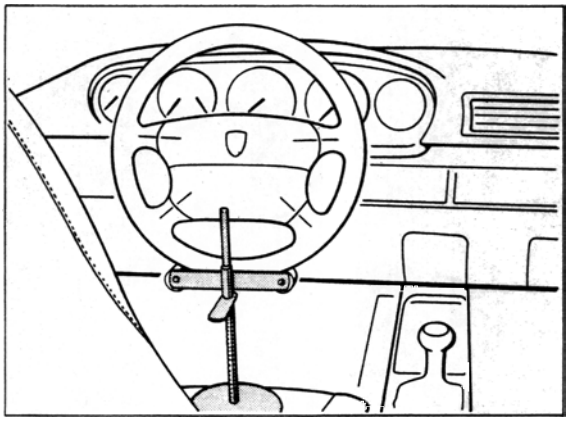

1450-44

After undoing the lock nut (No. 1), adjust toe-in at the tie rods.
Make sure the respective bellows **is not twisted** (damaged).

Toe difference angle

The toe difference angle cannot be adjusted (modification is only possible if the steering arms are replaced).

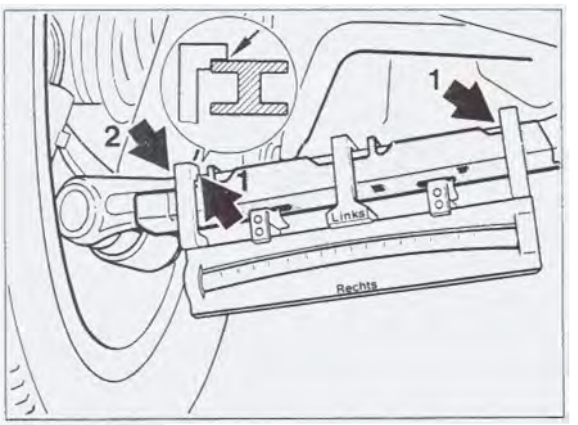

1446-44

Mount **Special Tool 9549 to control arm 5** in such a manner (measuring surfaces must be free from grease) that the negative range of the scale (long end of tool) points towards the transmission side.
Start by placing tool against the support point (support lug) on the wheel side. The inner measuring arm must contact the control arm (arrow). If required, straighten spring on Special Tool somewhat.

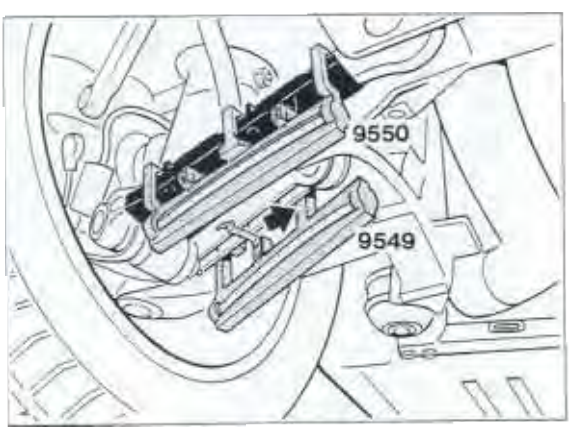

1447-44

Read off figures on both Special Tools. Both figures may deviate from each other by **not more than 1.5** scale units.
Measure and read off at the center of the bubble level.

If required, align both bubble levels (numerical values) with each other. **In this position, the kinematic toe-in change is adjusted correctly.**
Adjust at control arm 4 (caster control arm / refer to fig. 1445A-44).
To adjust, turn the eccentric washer after undoing the fastening bolt (area C).
When adjusting the kinematic toe-in change, make sure the **camber values remain within the admissible tolerance range.**

Fit Special Tool 9549 and 9550 to the **opposite side of the rear axle.**
Proceed with measurements and adjustments on this side of the axle as described above.
Special Tool 9549 is mounted to switchover position while the orientation of Special Tool 9550 remains the same as on the opposite side of the axle.

Front axle

The adjustment operations on the front axle differ only in details (adjustment values, tightening torques, new tie rods) from those of the 911 Carrera 2/4 (964).

Adjusting camber

Camber is adjusted by turning the spring strut with regard to the wheel carrier. To adjust, undo both fastening bolts. Use **Special Tool 9265/1** in combination with a torque wrench for the upper fastening bolt.

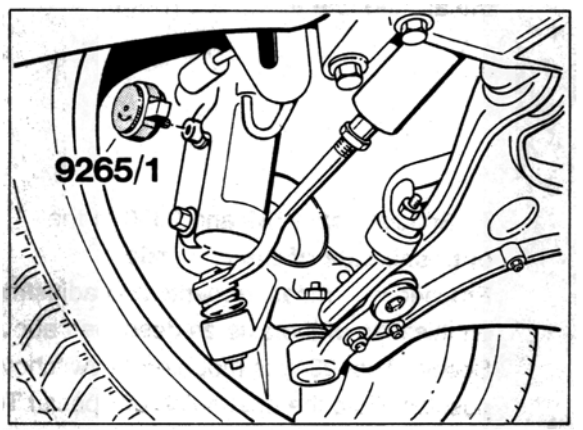

1448-44

Place eccentric insert **9265** on the upper bolt head of the fastening bolt (cylindrical bolt) and adjust camber by turning the insert.

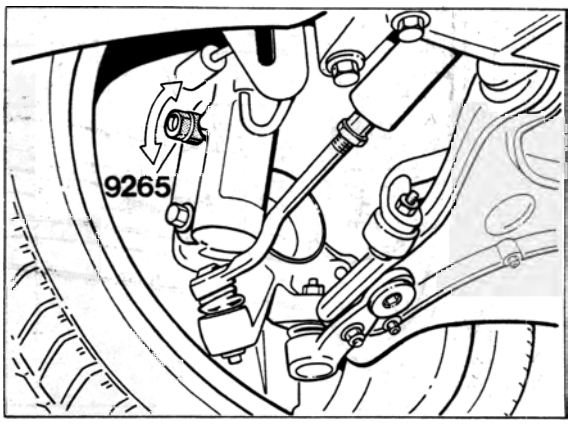

1449-44

Adjusting caster

Undo bolt connection of joint carrier to A-arm (2 lock nuts / no. 1).
Adjust caster by turning the caster eccentric (no. 2). This moves the joint carrier in forward or backward direction.

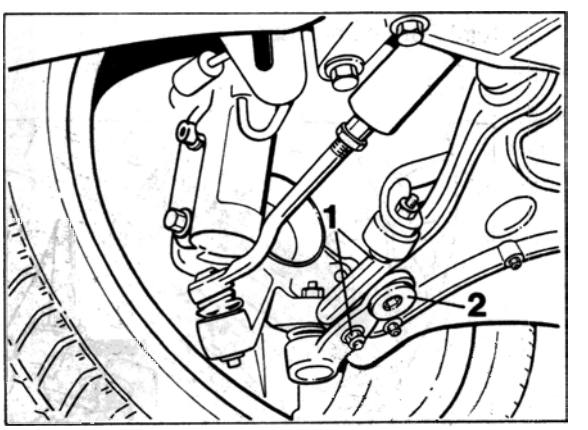

1451-44

44 Wheel alignment measurements on 911 Carrera RS

The following text only describes points which are different from the 911 Carrera. Details of alignment measurements on 911 Carrera vehicles are given on pages 44 - 7 to 44 - 17.

Differences for Carrera RS

Changed settings
(see pages 44-3 to 44-5).

When driving onto the platform, additional ramps, such as those needed for the 959, must be used. Otherwise, the front spoiler (arrow) would touch the ground.
Platforms without inclination are not suitable.

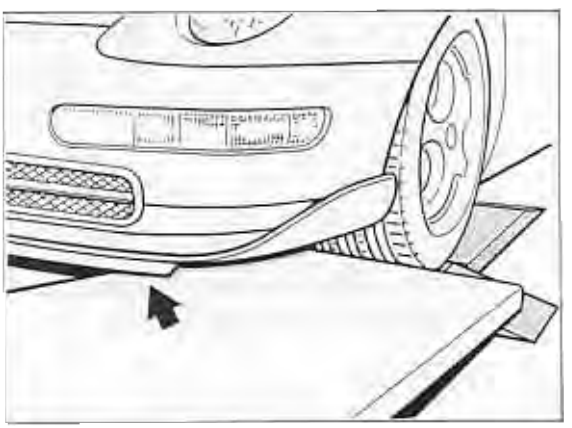

2188 - 44

Depending on the equipment used, spoiler adapters with lengths of 50 or 100 mm are required for the sensors of **electronic** wheel alignment testers. Without these adapters, data cannot be transmitted from the right to the left.
With the wheel alignment testers recommended by Porsche, which have a special **spoiler test program**, 100 mm spoiler adapters are needed for the rear axle. Check the operating instructions of the wheel alignment tester.

Adjusting height of front axle:
As with the 911 Carrera, the height of the lower spring mount is adjustable. However, the **Carrera RS has an additional lock nut**.

The height of the rear axle can be adjusted using the adjustment nut(s) on the spring strut(s).

Note

On the 911 Carrera (993), the spring struts must be removed for rear axle height adjustments. Different shims must be positioned on the upper spring retainers.

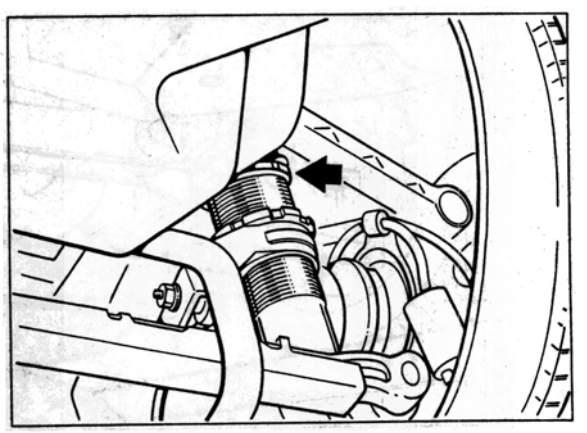

2191/1 - 42

Max. wheel load difference left/right on front and rear axle 20 kg (as for 911 Carrera).

Setting rear axle camber:
As for 911 Carrera.

Note

In order to obtain more camber (up to - 3° 30') for racing use, the slot in the side part near to the camber arm is longer.
To allow a greater adjustment range, the **stroke of the camber arm has been increased by 2 mm**.

To adjust the **kinematic toe-in change** on the rear axle, the stabilizer must be removed.
The vehicle must then be lifted until control arms 2 (track arms) are about horizontal using an axle lift unit positioned at the center. This is essential for installing and reading the levels.
The setting procedure itself is the same as for setting the kinematic toe-in change on the 911 Carrera.

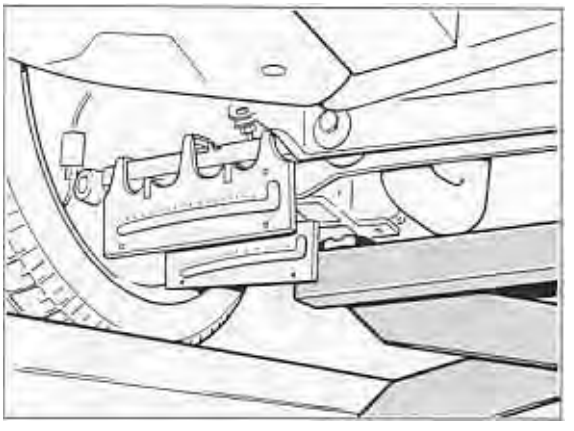

2193 - 44

Setting front axle camber:
As for 911 Carrera.
Caution: The **racing camber setting** available on the Carrera RS must be used **only** on the race circuit. The spring strut mount can be set from **normal** (as shown on the drawing) to racing camber.
Three bolts and nuts (no. 1) and two slots (arrows) in the upper part of the mount are used to change the camber.
The camber is increased by - 1° 30'. Fine adjustment by ± 20' is possible using the slots.

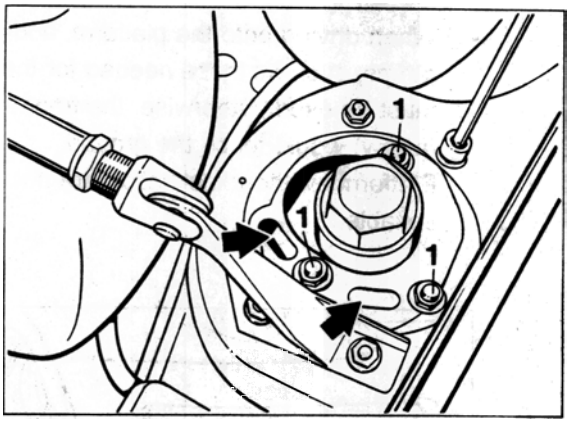

2187 /1 - 40

After adjustment and assembly work, check all wheels for free running.

44 Checking wheel rims

Checking radial and lateral runout

Radial and lateral runout must be measured at the points on the inside of the wheel rim shown on the following drawing (dimension "a").

The **maximum** allowable radial and lateral runout on **light alloy wheels** is **0.7 mm.**

The **maximum** allowable radial and lateral runout on **wheels with tires** is **1.25 mm.** Values lower than 1.0 mm (preferably around 0.5 mm) should be aimed for.
See also page 44-23.

Caution: Welding and straightening work on light alloy wheels is not allowed.

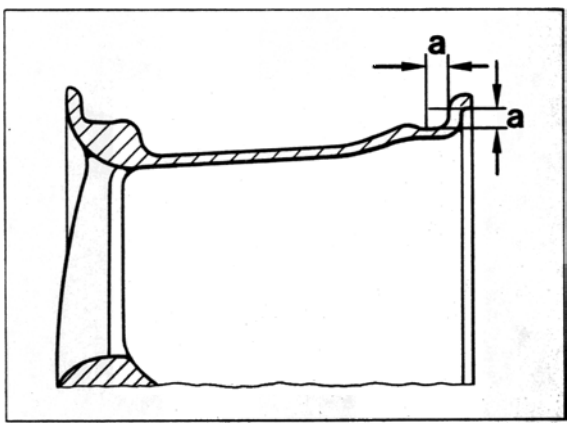

2273-44

Dimension "a" = 8 mm

Note

For measurements on wheels with or without tires, use a tire runout gage, e.g. V.A.G 1435.

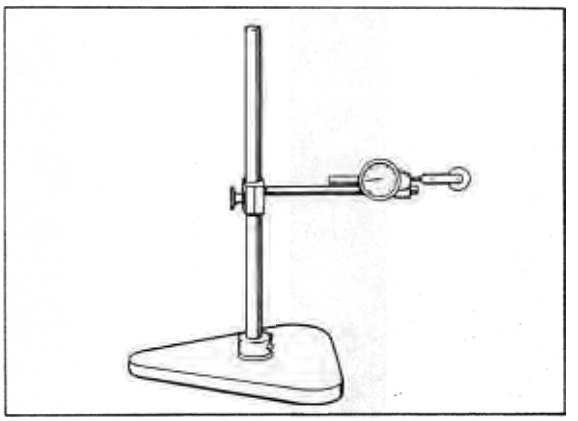

2272-44

44 General tire fitting instructions

Each time a tire is changed, a new rubber valve must be used.
Steel valves (on technology wheels) need not always be replaced when a tire is changed (see page 44-26).
Valve supports are **not** used.

Caution: when fitting tires, make sure that they are fitted in the right direction (with the inside on the inside).

When fitting tubeless tires, it is important to check the contact surfaces of the tire and the rim for cleanliness and any damage. It should be noted that the bead base provides the seal on a tubeless tire. If the side of the bead is used for sealing, air may escape from the tire during hard driving.

When fitting tire beads, use only the tire fitting lubricants specified below.
If an unsuitable lubricant is used for tire fitting, the following problems may occur: twisting of tire on rim, breakage of bead bundle during fitting and damage to the wheel rim surface by corrosive materials.
Caution: use only TIP TOP Universal, order no. 593 0601 (3.5 kg pot), or Contifix.
If you use Contifix, apply it to the tire bead sparingly (to prevent twisting on the rim). If possible, the vehicle should not be driven for 24 hours following tire fitting or matching.

To prevent the tires from turning on the rims in operation, please inform your customers that they should avoid extremely hard acceleration and braking during the first 100 to 200 km with **new or newly installed tires**.
It may be useful to mark the position of the tire on the wheel rim.

The tire must not turn more than 20 mm on the rim. This is the absolute maximum. If this value is exceeded, the optimum results achieved by wheel balancing will be impaired.

For optimally smooth running it may be beneficial or in some cases even necessary to turn the tire to a better position on the rim (matching).
The difference between **uncontrolled** and **controlled matching** is explained below.

Uncontrolled matching: Turn the tire 90° or 180° on the tire to obtain acceptably smooth running (runout, imbalance and distribution of balance weights).
Controlled matching: For controlled matching, a wheel balancer with matching program is used. The results obtained in terms of smooth running (runout, imbalance and distribution of balance weights) are normally better than with uncontrolled matching.

Maximum allowable radial and lateral runout on **light alloy wheels 0.7 mm.**
Maximum allowable radial and lateral runout on **wheels with tires 1.25 mm.**
Values lower than 1.0 mm (preferably around 0.5 mm) should be aimed for.

Following tire fitting, pump the tubeless tires up to approx. 3 bar (max. 3.75 bar) gage pressure without valve inserts to ensure that they are properly seated on the rims.
At a pressure of no more than 3.75 bar, the tire beads must come up from the well and cross the hump of the bead seat to prevent breakage of the bead bundle. If necessary, interrupt work and lubricate all contact surfaces well with tire lubricant. Then repeat this procedure.
Screw in valve insert and pump tire up to specified pressure (page 44-1).

Prior to static balancing, check the radial and lateral runout of the wheel.
See page 44 - 23 for maximum limits and matching procedure.

When replacing a damages tire, the difference between the tread depth on the two tires of one axle must **not be more than 30 %.**

A summary of summer and winter wheels and tires is given in Technical Information (TI), Group 4.
When replacing summer tires, make sure that the new tires have the code N1, N2 or N0. These codes distinguish summer tires approved by Porsche from other versions of the same tire type and size.

Age of tires

Especially high-speed ZR tires should not be too old. **Tires older than 6 years must not be used.**
The age of the tire is indicated by the manufacturer's code which follows the DOT designation. The production date is at the end of the code (last three digits). From 1990 to 1999, the three-digit code is **followed by a triangle** in some cases (distinguishing feature).

Example:
DOT DM CP 05 Y **279**
27 = production week **27**
9 = production year 198**9**

Installing wheel on vehicle

Previous design: the security wheel nut is installed opposite the valve.
From September 1995: The security nut is no longer installed in a special position **in production. In after-sales service,** the **previous** practice for tire fitting may be continued. **Irrespective** of the position of the security wheel nut, it may be useful to mark the bolt opposite the valve before removing the wheel. This will ensure that optimum balancing results (achieved using finish balancers) will not be affected by tire fitting.

Balance weights

Balance weight type: adhesive weights as before (no special type required). See spare parts catalog.

Positioning: Install both weights on the inside (arrows)*. The outer weight must not be attached to the conical section. Just behind the wheel disk there is a cylindrical section intended for the installation of balance weights.

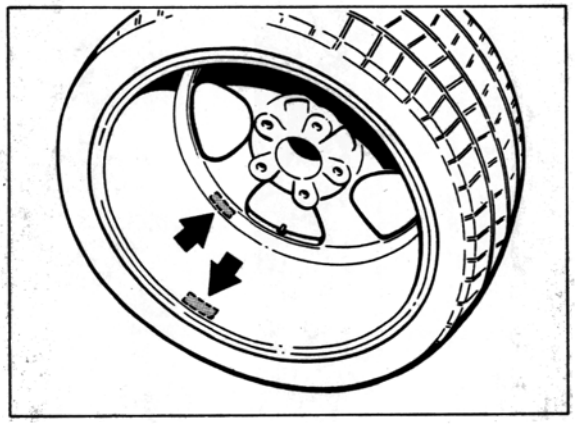

2122-44

* Note program selection and operating instructions of balancer

44 Technology wheel / Turbo-Look Design wheel

General

Technology wheels are hollow-spoke wheels. A new process is used to produce these wheels. The wheel rim and disk are two separate components which are joined by friction welding.
With this new Porsche process, the wheel disk is **also hollow.**

The wheel disk of **Turbo-Look Design wheels** is **not hollow.**

Distinguishing features of Technology and Turbo-Look Design wheels:

1. **Valve.**
   The Technology wheel **(No. 1)** has a steel valve, diameter approx. 8 mm.
   The Turbo-Look Design wheel **(No. 2)** has a rubber valve, diameter approx. 11.3 mm.
   For additional distinguishing features on outside of valve, see illustration.

2. **Part number** on the inside of the wheel disk.
   See spare parts catalog!

Allocation (as of August 1995)

Technology wheels:
Turbo (993) and special equipment for Carrera from model year 1996. The rear axle rim offset is **65 mm on the Carrera** and **40 mm on the Turbo.** The rim offset is stamped on the inside of the wheel disk. The tire sizes are also different.
The rim offset and tire sizes for the **front** wheels are identical for Turbo and Carrera.

Turbo-Look Design wheels:
Carrera 4S. Rim offset and tire size as for Turbo.

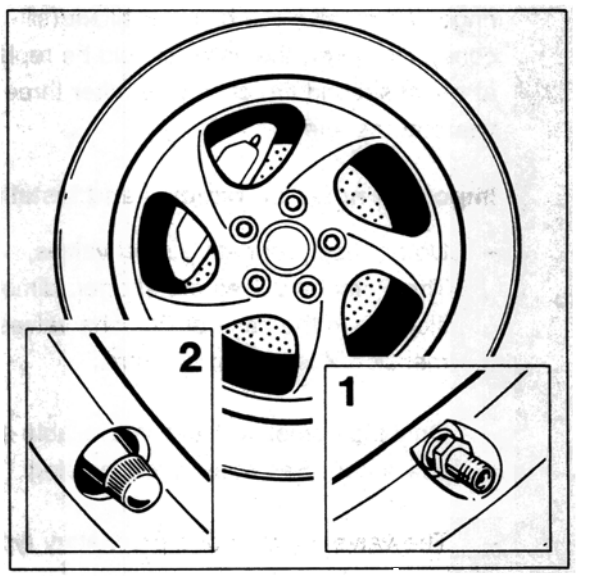

2278-44

For removing and installing steel valves of Technology wheels see page 44-26.

Pressure for tire fitting

When the tire is filled to seat the bead, the pressure must not exceed 3,75 bar. If necessary, interrupt work and lubricate all contact surfaces well with tire lubricant. Then repeat this procedure.

Removing steel valves of Technology wheels

General

It is not necessary to replace the steel valve each time the tire is changed as the seal rings of the valve are highly resilient (silicone). However, the valve should be replaced at every second tire change or after three years at the latest.

Important notes on removal and installation

Do not use proprietary steel valves.
The Porsche valves are shorter (dimension X). In the case of Porsche valves, dimension X is approx. 43 mm.

Only the complete valve is available as a spare part. See spare parts catalog.

The valve insert is of a proprietary type.

Valve cap No. 1 is equipped with a seal (air-tight). Do not use a proprietary valve cap.

The shank of the fastening nut no. 2 **must face the valve base.** Otherwise the valve will not be firmly seated.

Observe the position of washer no. 3 (arrow). If the washer is incorrectly installed, the O-ring will be damaged. This may cause more serious damage.

When loosening and tightening fastening nut No. 2, you must **hold a screwdriver against** the valve base.
There is a slot for a screwdriver in the valve base.

Installation

Insert valve no. 5 with base seal (already installed) into wheel. Push O-ring no. 4 carefully onto valve from outside.
Install washer no. 3 in correct position (arrow). The O-ring will then fit into the recess on the washer.
Install fastening nut no. 2 with shank facing valve base.
Tighten fastening nut with **3.5 ± 0.5 Nm** (2.2 ± 0.4 ftlb) using a torque wrench.
When tightening nut, **hold a screwdriver against** the valve base.

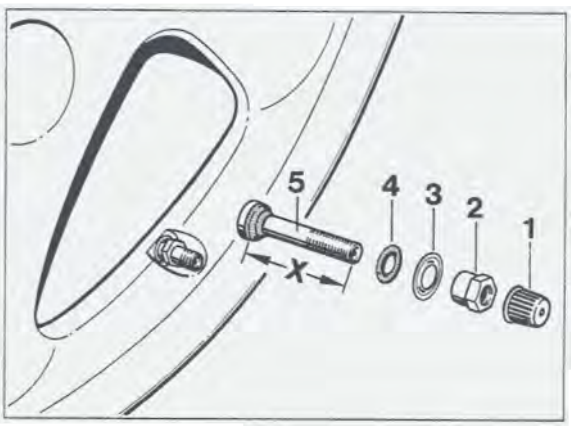

2128-44

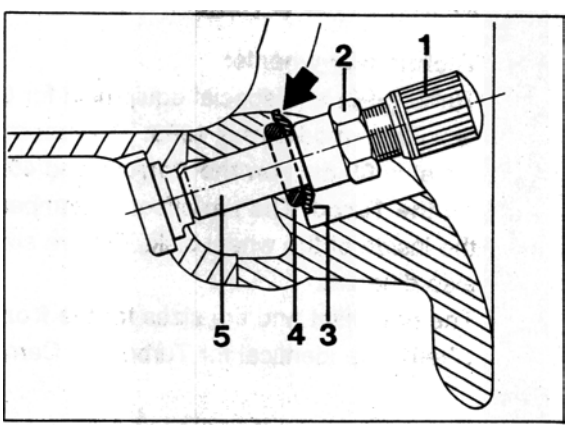

2150-44

Lift the **first side** over the fitting head (Fig. 1017-44). Place a cloth or piece of leather between wheel and tire lever to make work easier. In addition, you should make sure that the tire is held against the removal head in the well (Fig. 1018-44). Use special tool 9539 for this purpose.

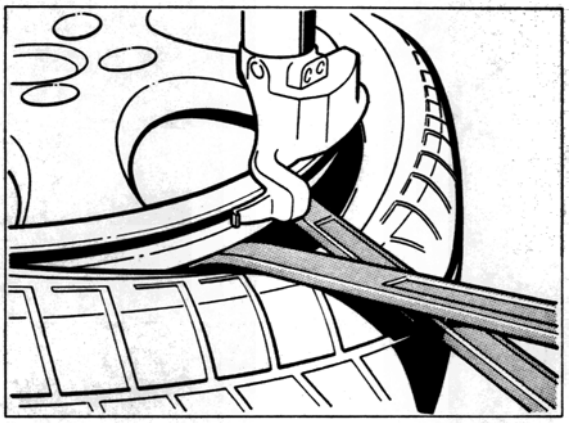

1017-44

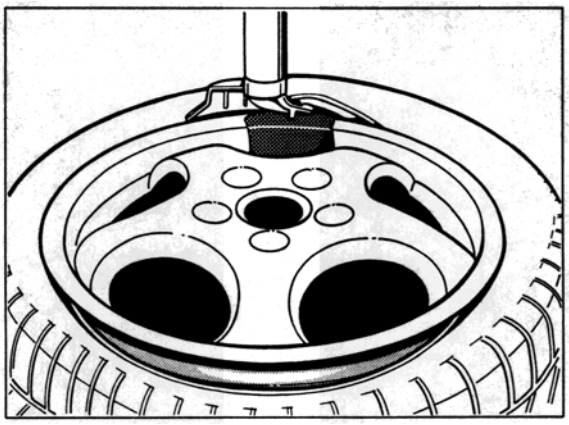

1018-44

Remove the **second side** in the normal way.

44 Tire fitting using conventional machines

Notes / tools

In order to prevent any damage to the paintwork, the rim flange should be covered with masking tape following tire removal.

For tire removal and installation, a retaining tool, special tool 9539, is required. In addition, the end of the tire lever should be flattened and then rounded (see arrow).

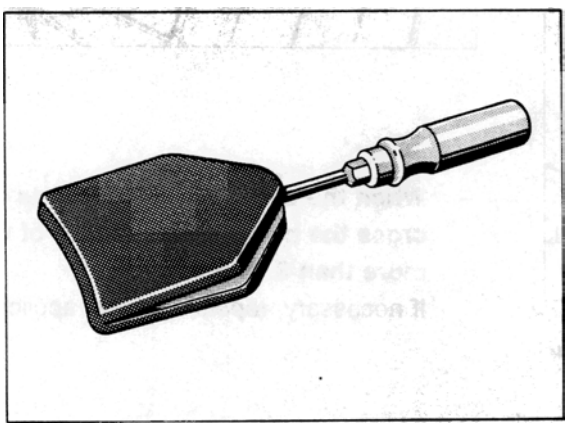

1012 - 44

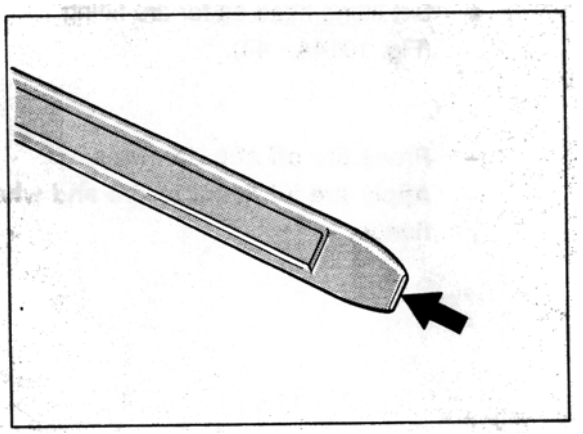

Tire fitting

Insert wheel in machine and apply tire lubricant to inside of wheel and both tire beads.
Before a tire is installed, the rubber valve must always be replaced. It is not always necessary to replace steel valves (see page 44-26).
When fitting tires, make sure that they are fitted in the right direction (with the inside on the inside).
Caution:
Use only TIP TOP Universal, order no. 593 0601 (3.5 kg pot), **or** Contifix as a tire lubricant.
See the **important notes** on these tire lubricants on page 44-23.

Set installation tool to correct spacing.

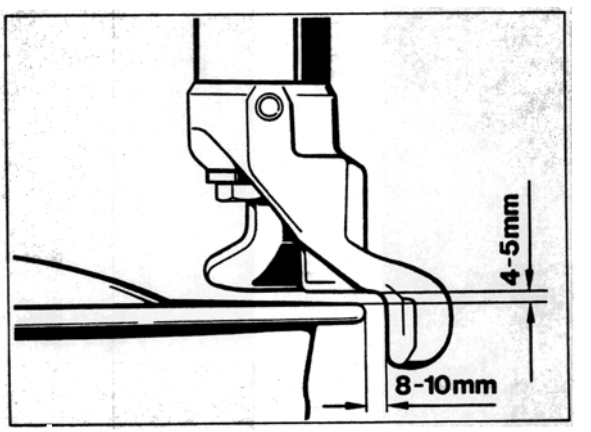

1014A - 44

Fit the first tire bead in the normal way.

Before you install the **second bead,** the fitting arm should be **opposite the valve.** Then place the second bead as flat as possible on the wheel, guide it over the fitting head and hold it in place using special tool 9539 at an angle of 90 - 120°.

During the turning and installation of the **second bead,** a second tire lever and special tool 9539 must be held against the tire bead in the well.

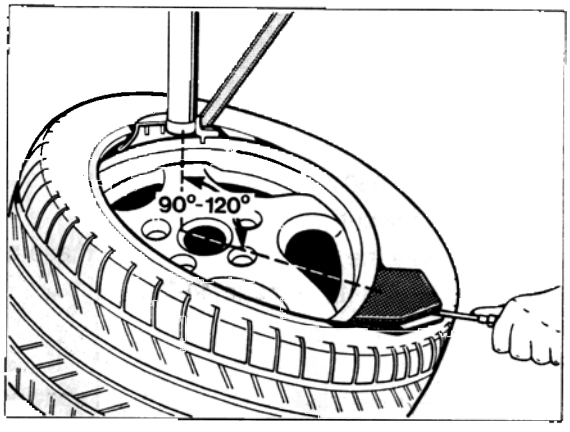

1015 - 44

Note

Depending on the wheel/tire combination, **it may be necessary to apply the additional tire lever** below the hump.

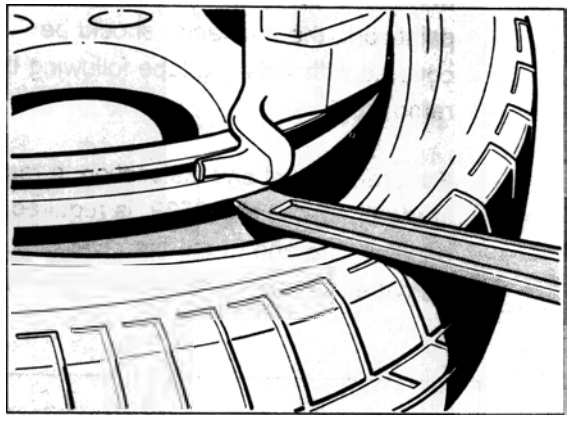

1016 - 44

When the tire is filled, the beads must cross the hump at a pressure of no more than 3.75 bar gage
If necessary, repeat lubricant application.

Tire removal

Set fitting head as for tire fitting (Fig. 1014A - 44).

Press tire off at both sides.
Apply tire lubricant to tire and wheel flange.

45 Important information on ABS 5 and ABS 5 / ABD

General

The Porsche 911 Carrera (993) is supplied as standard equipment with ABS 5 (5th generation) or optionally (M number) with ABS 5/ABD.
ABD = **A**utomatic **B**rake **D**ifferential.

Diagnostics and system check of **both** systems are carried out with System Tester 9288.

The pulse wheels of the front axle (tensioning discs) and the pulse rings of the rear axle have 48 teeth. The versions used on the 911 Carrera 2/4 (964) had 45 teeth. This difference should be observed when fitting spare parts to avoid confusion.

The brake pipes are fitted with different threads at the hydraulic unit and at the adapter (M 12 x 1 and M 10 x 1).
This prevents or reduces the risk of the brake pipes being interchanged.
The adapter is located in the left-hand upper section of the spare wheel well.

Differences between ABS 5 and ABS 5 / ABD

ABS 5 = **3-channel system**
(for schematic diagram, refer to page 45 - 2)

ABS 5 / ABD = **4-channel system**
(for schematic diagram, refer to page 45 - 3)

The major differences between ABS 5 and ABS 5 / ABD **are as follows:**

Brake power controller at hydraulic unit:
ABS 5 = **1** ea.
ABS 5 / ABD = **2** ea.

Number of brake pipes at adapter (in left-hand upper area of spare wheel well):
ABS 5 = **3** brake pipes.
ABS 5 / ABD = **4** brake pipes.

ABD warning lamp and **ABD** operation lamp (information lamp) on vehicles fitted **with ABS 5 / ABD.** After the ignition is switched on (lamp check), these lamps are illuminated.
On vehicles fitted with **ABS 5,** these lamps in the instrument cluster **are not used.**

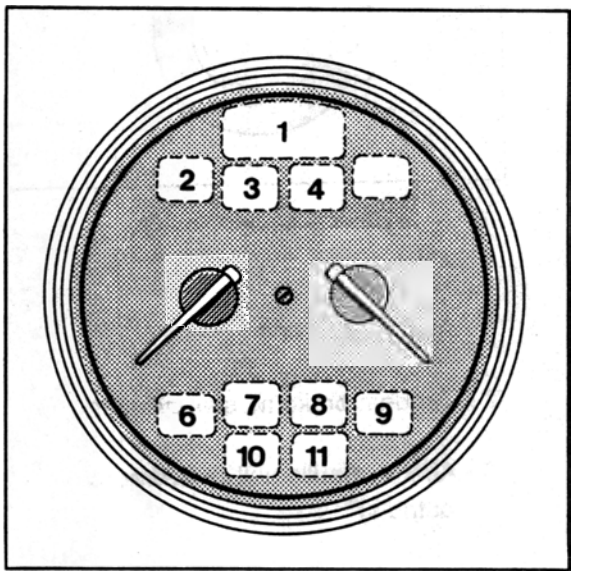

201

2 - ABD information lamp
3 - ABD warning lamp

Schematic diagram - ABS 5 (3-channel system)

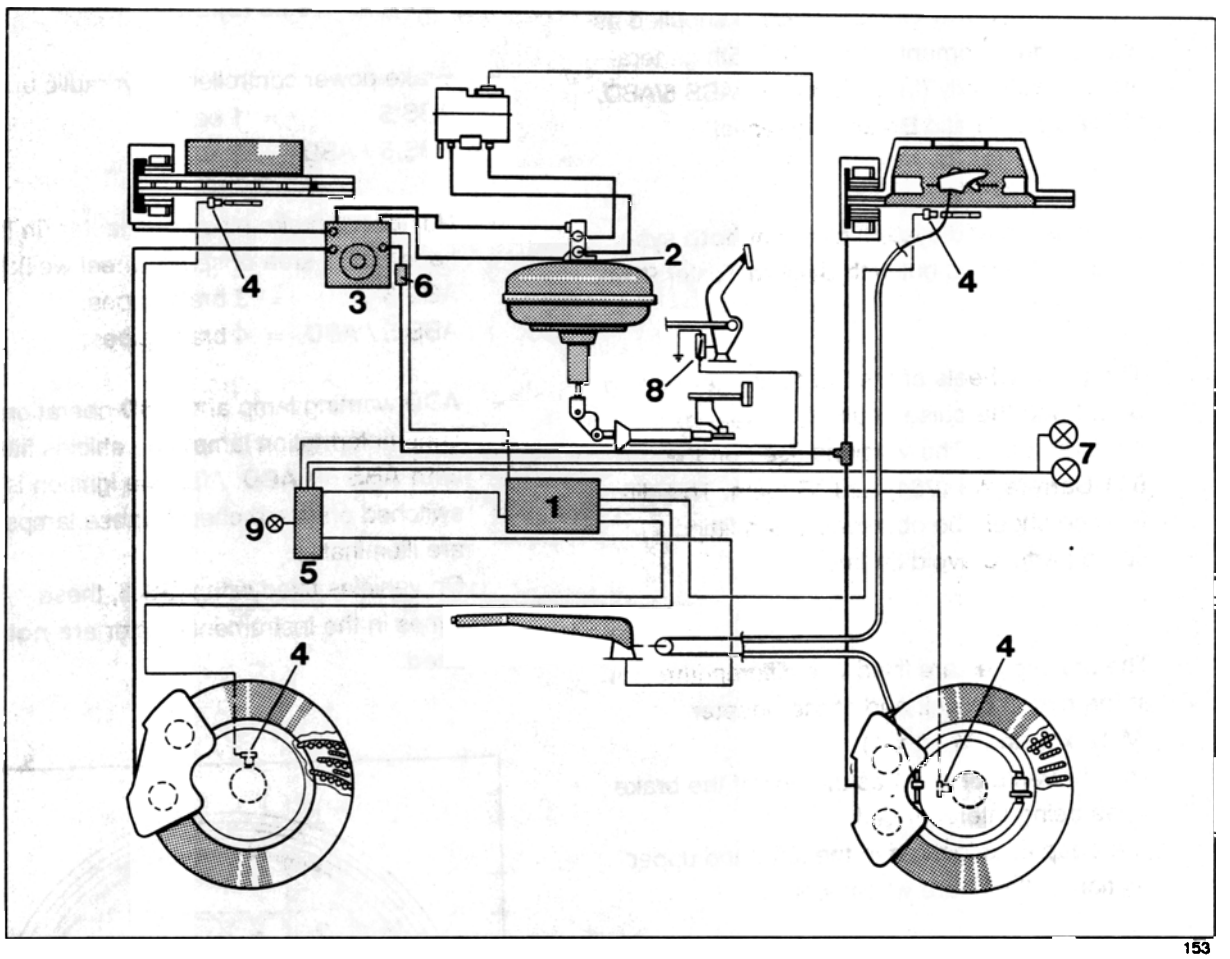

153

1 - ABS control unit

2 - Tandem brake master cylinder

3 - ABS hydraulic unit (**3** hydraulic outputs)

4 - ABS sensors

5 - Central Information System

6 - Brake power controller (**1**)

7 - Brake light

8 - Brake light switch

9 - ABS warning lamp

Schematic diagram - ABS 5 / ABD (4-channel system)

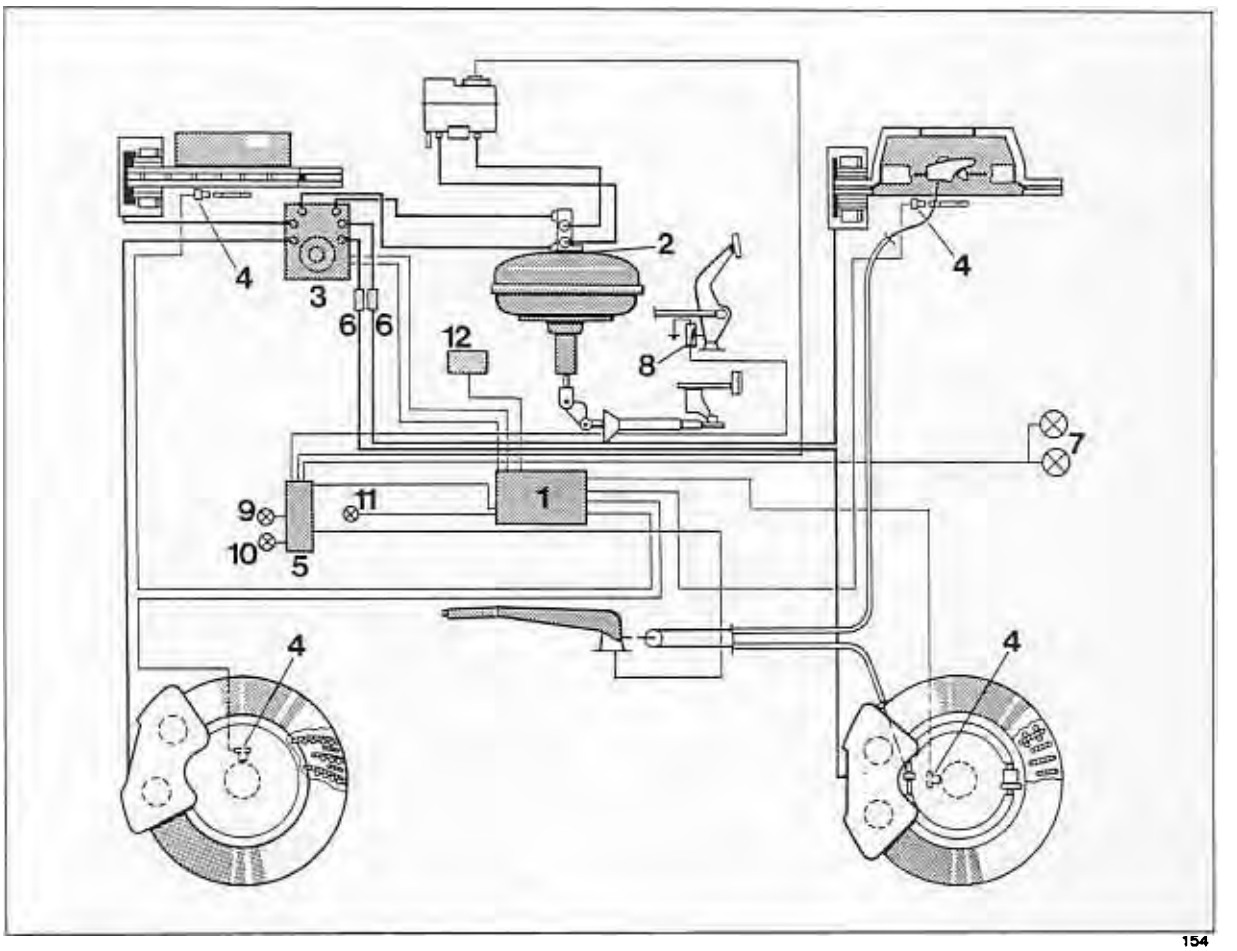

1 - **ABS/ABD** control unit

2 - Tandem brake master cylinder

3 - **ABS/ABD** hydraulic unit (**4** hydraulic outputs)

4 - ABS sensors

5 - Central Information System

6 - Brake power controller (**2**)

7 - Brake light

8 - Brake light switch

9 - ABS warning lamp

10 - **ABD warning lamp**

11 - **ABD operation warning lamp**

12 - **DME control unit**

45 Location of ABS 5 and ABS 5 / ABD components

Rpm sensor

The rpm sensors are inserted into the wheel carriers and are held in place with one 6 mm bolt each. The front and rear rpm sensors are **different.**
Identification features: Part number indicated on rpm sensor wire.

Control unit (ABS 5 and ABS 5/ABD)

The control unit is fitted in the right-hand front side of the luggage compartment with 4 ball pins. These four ball pins also serve to hold the control unit cover in place. A rubber seal is used to provide sealing of the cover.
The control units may be identified by the part number and by a self-adhesive sticker with a colored edge.
ABS 5 – Sticker with **black** edge.
ABS 5 / ABD – Sticker with **yellow** edge.

Note

To keep the plugging cycles of the control unit plug as low as possible, the control unit was located in a suitable position. The plug needs **not** be pulled off for diagnostics or system tests.

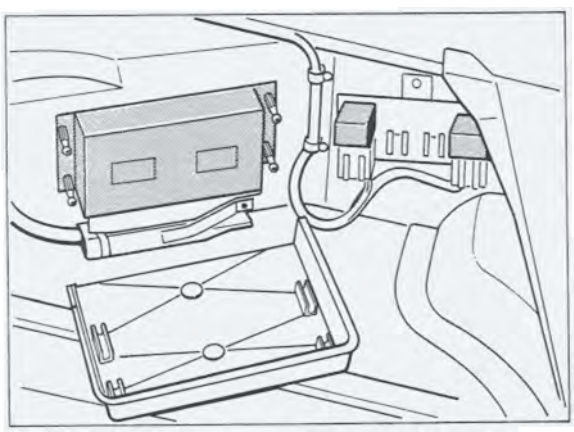

Fuses

1. A 60 A Maxifuse is used to protect the return pump and the solenoids.
   The fuse is located on a separate fuse carrier (No. 2). This fuse carrier is fitted in the luggage compartment next to the battery **below** the cover for the hydraulic unit.

Note

The second 60 A Maxifuse is used to protect the DME.

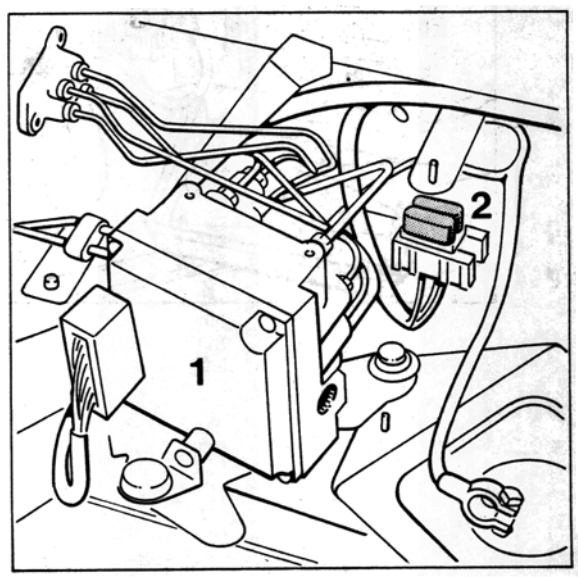

2. The voltage supply to the control units (ABS 5 and ABS 5 / ABD) is protected by a 10 A fuse (No. 16) at the Central Electrical System.

Relays

The scavenge pump relay (R 65) and the solenoid relay (R68) are located in the luggage compartment on the right-hand wheel housing next to the ABS 5 or ABS 5 / ABD control unit, respectively.
Both relays are identical 50 A power relays. The R 65 and R 68 identifications are indicated on the relay **cover**.

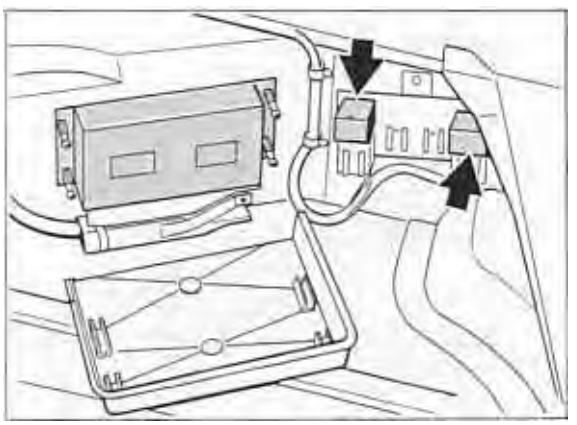

1773A-45

Hydraulic unit

The hydraulic unit (No. 1) is located in the left-hand front area of the luggage compartment as before.
The ABS 5 hydraulic unit features **three** hydraulic outputs (3-channel system).
The ABS 5 / ABD hydraulic unit features **four** hydraulic outputs (4-channel system).

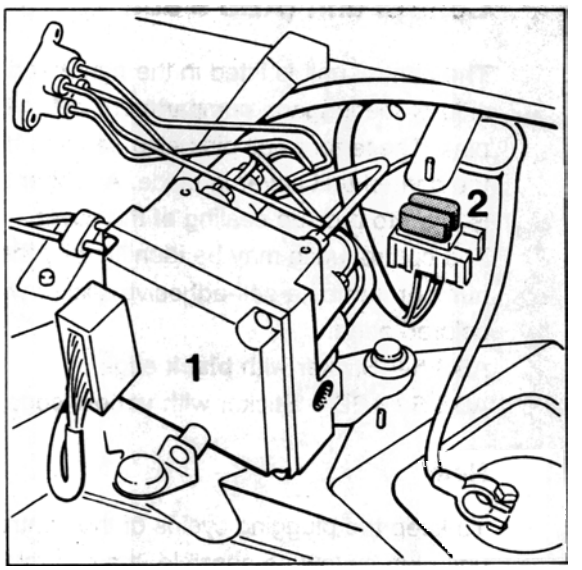

1772-45

45 ABS 5 test with System Tester 9288

Importaint notes on the ABS 5 and ABS 5 / ABD systems

When carrying out operations on the hydraulic unit, the rpm sensors and the wire assembly, or when replacing units, a **system check (operational check)** with System Tester 9288 must be carried out. This may be required e.g. after accident repairs. This check ensures that confusion of electrical wires and hydraulic lines is avoided and that **correct system operation** is ensured. When replacing certain brake pipes, e.g. at the intermediate section (in the upper left spare wheel well), **a system check must also** be run. Inadvertent bending of the brake pipes may cause the hydraulic connections to be incorrect in spite of the presence of different threads (M12 x 1 and M 10 x 1).

2. If a fault is displayed, (and if no assembly operations have been carried out before) **diagnosis and troubleshooting** are also carried out with System Tester 9288. To run the test, select System ABS 5 or ABS 5 / ABD, respectively, and read out the fault memory. The relevant menus (page 45-9) may then be used to locate the fault.

Tools

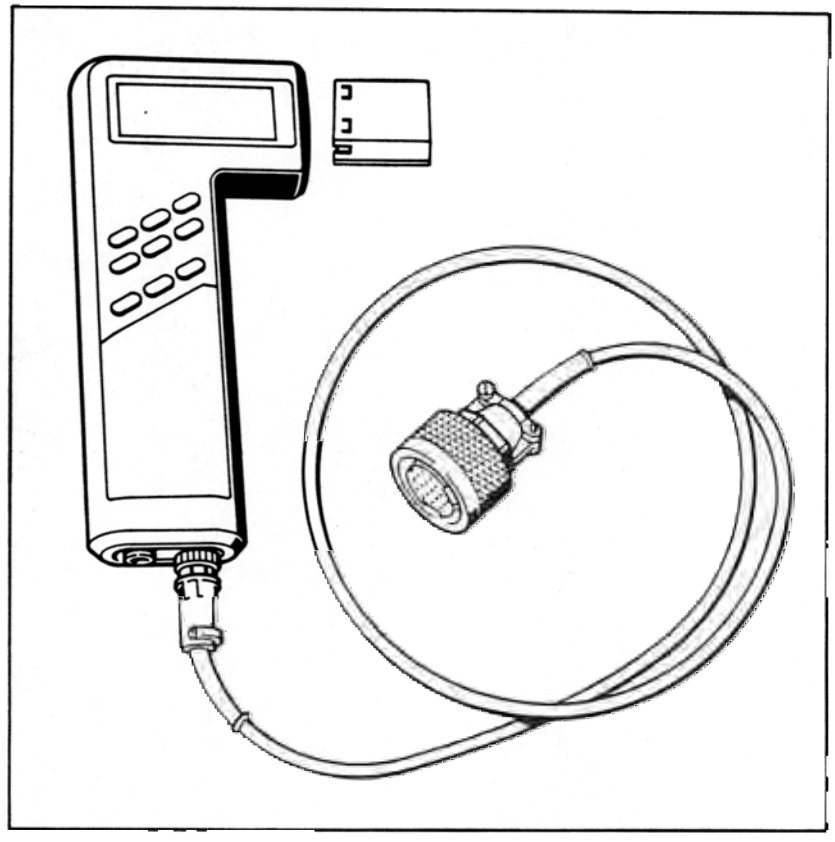

855-03

Tools

No.	Designation	Special tool	Order number	Explanation
	System Tester 9288 with	9288	000.721.928.80	
	connection wire and	9288/1	000.721.928.81	
	corresponding	928 DV	000.721.928. DV	German
	program module	928 GV	000.721.928. GV	English
	from version 5.0 / 9.93	928 FV	000.721.928. FV	French
	(language-dependent)	928 IV	000.721.928. IV	Italian
		928 EV	000.721.928. EV	Spanish
		928 SV	000.721.928. SV	Swedish
		928 JV	000.721.928. JV	Japanese

ABS 5 and ABS 5 / ABD menus

Scope of application of menus

1 = Fault memory

2 = Drive links

3 = Actual values

Item 1: Fault memory

Used for fault detection / troubleshooting.

Item 2: Drive links

Used for troubleshooting. Drive links (actuators) may be triggered with System Tester 9288.

1 = Static test

2 = System check

3 = Bleeding

Item 3: Actual values

Used for troubleshooting. Actual values may be retrieved with System Tester 9288.

Note

ABS 5 includes only **5** menus.
3= Bleeding is omitted.

Item 1: Static test

Electrical test of the system (preliminary check), e.g. after replacement of relays or if plugs have been disconnected.
Caution: This test cannot **under any circumstances** replace the system check as the electrical wires and hydraulic lines are not tested for incorrect connection. In addition, the **mechanical** operation of the solenoids is **not** tested.

Item 2: System check

After carrying out specific repair and/or assembly operations on the ABS 5 or ABS 5 / ABD (refer to p. 45-7), a system check (operational test) **must** be run with System Tester 9288. This test is **menu-controlled.**
Caution: Certain individual test steps must be **completed within 30 seconds** as the test will otherwise be aborted.

Item 3: Bleeding

Only for vehicles with **ABS 5 / ABD.**
Not used on vehicles with ABS 5 .
Used to bleed the ABD circuit of the hydraulic unit after replacing the hydraulic unit. May also be used if pedal travel is excessive, provided the system has previously been bled perfectly.

Note

The menu-driven testing procedure and troubleshooting are described in Vol. VIII, Diagnosis.

45 11 19 Removing and installing front speed sensor

Removal

1. With the ignition switched off, open the connector assembly on the spring strut and unplug the connector for the speed sensor.

2. Unscrew the mounting bolt (Allen bolt) and remove the speed sensor.

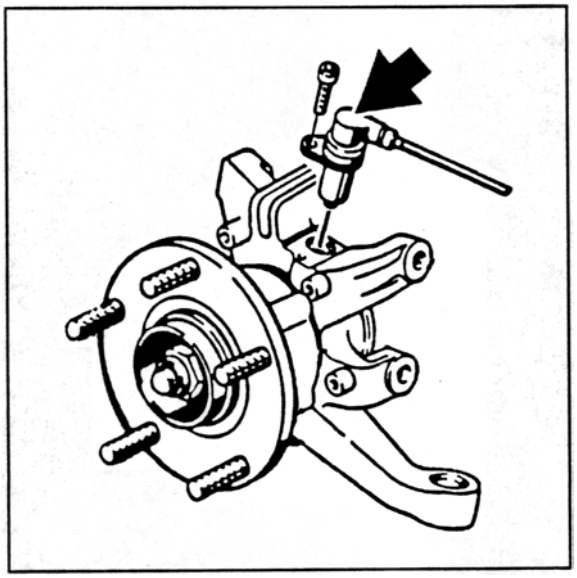

2198 - 45

Important notes

Before installing the speed sensor, make sure that there are no metal chips on the magnetic blade.

The spacing between speed sensor and pulse generator wheel is determined by the design and cannot be adjusted.

Installation

1. Apply Molykote Longterm to the speed sensor and the hole in the wheel carrier.

   Caution: There is **no O-ring** between the speed sensor and the wheel carrier. In addition, the front and rear speed sensors must not be confused with each other. Otherwise, the blade of the speed sensor will be offset 90 degrees from the pulse edge.
   Distinguishing feature: Spare part no. marked on the speed sensor lead and position of mounting hole in relation to blade.
   1 = Front axle speed sensor
   2 = Rear axle speed sensor.

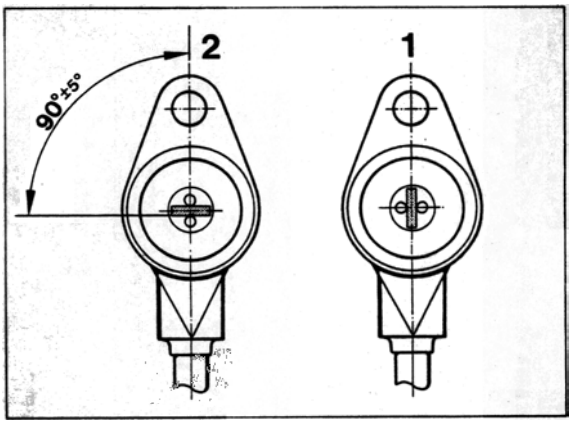

1959 - 45

2. Insert speed sensor in wheel carrier without applying any force and tighten the Allen bolt with 10 Nm (7.4 ftlb).

Printed in Germany - 12 1995

3. If the speed sensor is removed or replaced because of an ABS / ABD malfunction or in the course of repairing accident damage, the sensor must be tested using system tester 9288, menu "actual values" item "speed".
   Description in Repair Manual,
   p. 45 -37 / 45 - 38, Vol. VIII, Diagnosis.

45 15 19 Removing and installing rear speed sensor

Removal

1. With the ignition switched off, open the connector assembly on the wheel carrier and unplug the connector for the speed sensor.

2. Unscrew the mounting bolt (Allen bolt) and remove the speed sensor.

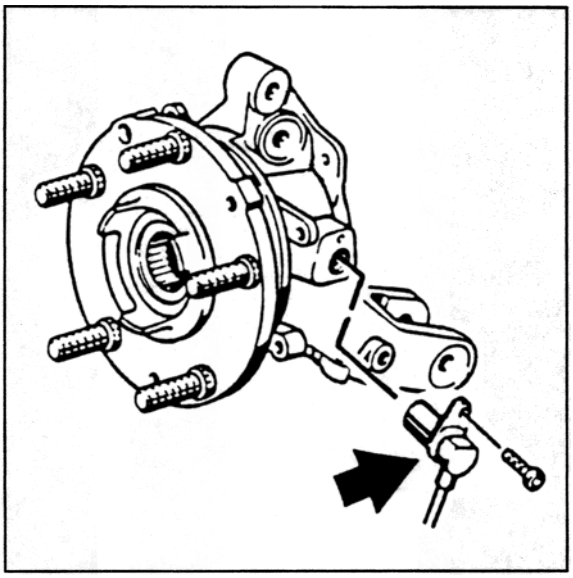

2199 - 45

Installation

1. Apply Molykote Longterm to the speed sensor and the hole in the wheel carrier.

   Caution: There is **no O-ring** between the speed sensor and the wheel carrier. In addition, the front and rear speed sensors must not be confused with each other. Otherwise, the blade of the speed sensor will be offset 90 degrees from the pulse edge.
   Distinguishing feature: Spare part no. marked on the speed sensor lead and position of mounting hole in relation to blade.
   1 = Front axle speed sensor
   2 = Rear axle speed sensor.

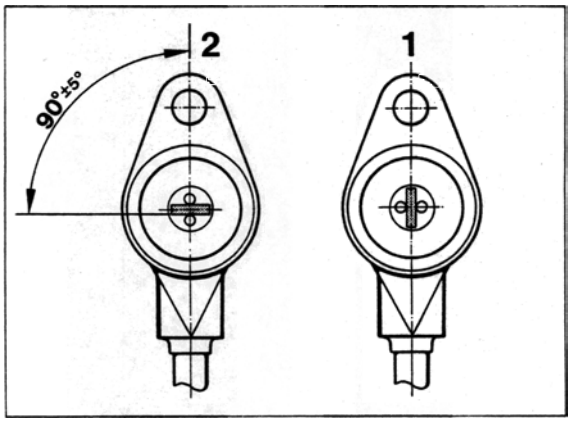

1959 - 45

2. Insert speed sensor in wheel carrier without applying any force and tighten the Allen bolt with 10 Nm (7.4 ftlb).

3. If the speed sensor is removed or replaced because of an ABS / ABD malfunction or in the course of repairing accident damage, the sensor must be tested using system tester 9288, menu "actual values" item "speed".
   Description in Repair Manual,
   p. 45 -37 / 45 - 38, Vol. VIII, Diagnosis.

46 Tightening torques for mechanical brake system

Location	Thread	Tightening torque Nm (ftlb.)
Brake caliper* to front and rear axle	M 12 x 1,5	85* (63)
Brake disc to wheel hub (front and rear axle)	M 6	5 (4)
Brake cover plate to front and rear axle	M 6	10 (7)
Rpm sensors to front and rear axles	M 6	10 (7)
Ball joint to brake pushrod	M 12 x 1,5** M 10***	17** (13) 35*** (26***)
Wheel to wheel hub	M 14 x 1,5	130 (96)

Replace mounting bolts on front axles whenever they have been undone

Vacuum brake booster

*** Hydraulic brake booster

46 Technical data 911 Carrera / 911 Carrera S

Designation		Remarks, dimensions	Wear limit
Service brake (foot-operated)		Hydraulic dual circuit brtake system with front/rear axle brake circuit division. Vacuum brake booster, inboard vented, drilled brake discs with four-piston fixed calipers on front and rear axle. ABS standard. ABS /ABD* available optionally	
Brake booster (vacuum)	dia.	9 in.	
Boost ratio		3.15	
Brake master cylinder	dia. front	23.81 mm	
	dia. rear	23.81 mm	
	Stroke	22.5 / 13 mm	
Brake power controller**			
Switchover pressure reducing factor		40 bar - 0.46	
Brake disc dia.	front	304 mm	
	rear	299 mm	
Effective brake disc dia.	front	251 mm	
	rear	246 mm	
Piston dia. in brake caliper	front	2 x 44 + 2 x 36 mm	
	rear	2 x 34 + 2 x 30 mm	
Brake pad area	front	250 cm^2	
	rear	172 cm^2	
Total brake pad area		422 cm^2	
Pad thickness	front	approx. 11.0 mm	2 mm
	rear	approx. 12.0 mm	2 mm

ABD = Automatic Brake Differential

Vehicles w. ABS = 1 brake power controller, vehicles w. ABS/ABD = 2 brake power controllers

Designation	Remarks, dimensions	Wear limit
Brake pad thickness, **new**		
front	32 mm	
rear	24 mm	
Brake discs		
Minimum thickness* **after machining**		
front	30.6 mm	30.0 mm
rear	22.6 mm	22.0 mm
Thickness tolerance of brake disc, max.	0.02 mm	
Lateral runout of brake disc max.	0.05 mm	
Lateral runout of wheel hub max.	0.04 mm	
Lateral runout of brake disc when installed, max.	0.09 mm	
Max- peak-to-valley surface roughness of brake disc after machining max.	0.006 mm	
Pushrod play (measured at brake pedal plate)	approx. 8 mm	
Parking brake	mechanical drum brake acting on both rear wheels	
Brake drum dia.	180 mm	181 mm
Brake shoe width	25 mm	
Brake pad thickness	4.5 mm	2 mm

* Brake discs may only be machined symmetrically, i.e. uniformly on both sides.

46 Technical data Carrera RS

The following values apply to the basic version M 002 and the Clubsport version M 003.

Designation		Remarks, dimensions	
Service brake (foot-operated)		Hydraulic dual circuit brtake system with front/rear axle brake circuit division. Hydraulic brake booster, inboard vented, drilled brake discs with four-piston fixed calipers on front and rear axle. ABS/ABD* as standard equipment	
Brake booster		hydraulic	
Boost ratio		3.6	
Brake master cylinder	dia. front	25.4 mm	
	dia. rear	25.4 mm	
	Stroke	17/15 mm	
Switchover pressure (2 units) reducing factor		40 bar - 0.46	
Brake disc dia.	front	322 mm	
	rear	322 mm	
Effective brake disc dia.	front	259,6 mm	
	rear	268,4 mm	
Piston dia. in brake caliper	front	2 x 44 + 2 x 36 mm	
	rear	2 x 36 + 2 x 30 mm	
Brake pad area	front	302 cm^2	
	rear	250 cm^2	
Total brake pad area		552 cm^2	
Pad thickness	front	approx. 11.0 mm	2 mm
	rear	approx. 11.0 mm	2 mm

ABD = Automatic Brake Differential

The following values apply to the basic version M 002 and the Clubsport version M 003.

Designation	Remarks, dimensions	
Brake pad thickness, **new**		
front	32 mm	
rear	24 mm	
Brake discs		
Minimum thickness* **after machining**		
front	30.6 mm	30.0 mm
rear	22.6 mm	22.0 mm
Thickness tolerance of brake disc, max.	0.02 mm (new 0.01 mm)	
Lateral runout of brake disc max.	0.05 mm	
Lateral runout of wheel hub max.	0.04 mm	
Lateral runout of brake disc when installed, max.	0.09 mm	
Max- peak-to-valley surface roughness of brake disc after machining max.	0.006 mm	
Pushrod play (measured at brake pedal plate)	approx. 8 mm	
Parking brake	mechanical drum brake acting on both rear wheels	
Brake drum dia.	180 mm	181 mm
Brake shoe width	25 mm	
Brake pad thickness	4.5 mm	2 mm

* Brake discs may only be machined symmetrically, i.e. uniformly on both sides.

46 Checking thickness of brake pads

Note

When the brake pad wear warning lamp lights up or when a remaining pad thickness of 2 mm has been reached, all brake pads of the respective axle must be replaced.

If brake pad wear is indicated by the wear warning lamp, the warning contact (sender complete with wire and connector) must be replaced at the same time. Replacement of the warning contact can be avoided by replacing the brake pads at the latest when they are worn to a thickness of 2.5 mm. If the warning contact wire has been ground down to the bare core, the contacts must be replaced. Replacement is not necessary, however, if rubbing wear is limited to the plastic part of the warning contact only.

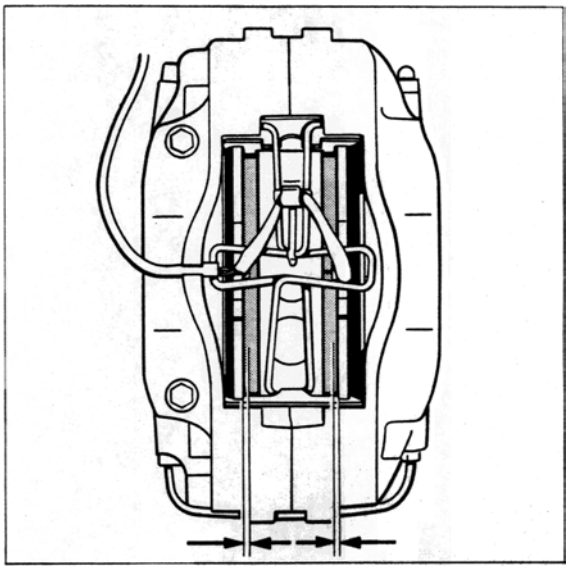

578-46

1. Remove **rear wheel** to check the brake pads.
   The front brake pads may be inspected with the wheels remaining fitted.

2. Check brake pads visually for wear.

The wear limit has been reached if the pad is worn down to a remaining thickness of 2 mm.

46 36 20 Removing and installing front brake pads

Note

The brake pads are replaced as on the other Porsche models with four-piston fixed calipers. The operations are therefore only described in brief. The following instructions, however, should be observed at all times:

Use correct brake pad quality (refer to spare parts catalog).

Replace damping plates whenever the brake pads are replaced.

The damping plate are provided with an adhesive backing and a protective sheet. **This protective sheet must be removed prior to installation.**

Never apply grease to the brake backplates (backs of brake pads).

Removal

Compress cross spring in the middle and disengage it from its seat. **At the same time, i.e. before compressing the cross spring, press the spring in the holder area towards the brake disc (release spring).** This prevents damage to the holder plate.

Move out warning contact on brake caliper and pull warning contact out of brake pad backing plate.

Note

Replace warning contacts if wire core is exposed or ground through. If grinding marks are limited to the plastic section of the warning contact, the contact may be reused.

Pull out brake pads with brake pad impact puller. **Be sure to observe** the following notes:

Move out brake pads along with damping plates. If this is not possible (depending on the degree of wear of the brake pads), use a spatula to separate the damping plates from the pad backing plate prior to removal of the pads.
In both cases, start by resetting the brake pads as far as possible using a piston retracting tool. If required, draw off some brake fluid from the reservoir prior to this operation.

Installing

If required, use retracting tool to push pistons back into home position.

Clean seating and guide surface of brake pads inside the caliper with white spirits and a cylindrical brush or special brush. **Take care not to damage the dust caps of the brake pistons.**

Fit **new damping plates** to the pistons. As the damping pads are provided with an adhesive backing and a protective sheet, the **protective sheet must be removed** before fitting the plates.

Install brake pads. **Observe correct brake pad quality.**

Note

Never apply grease to the brake pad backplates (back of brake pads). To prevent the brake pads from corroding in the caliper, however, the seating and guide surfaces are protected by a thin grease coat.
Use Optimoly HT (Cu paste) or Plastilube (supplied by Schillings, Postfach 1703, D-73431 Aalen) for this purpose.

Lubricate attachment eyes of the cross spring with Optimoly **TA** or Plastilube.
If required, install new cross spring in such a manner that the flat side points towards the brake disc. **Make sure the cross spring (arrow) engages correctly. Do not use force to push the spring into its seat (risk of damaging the holder).**

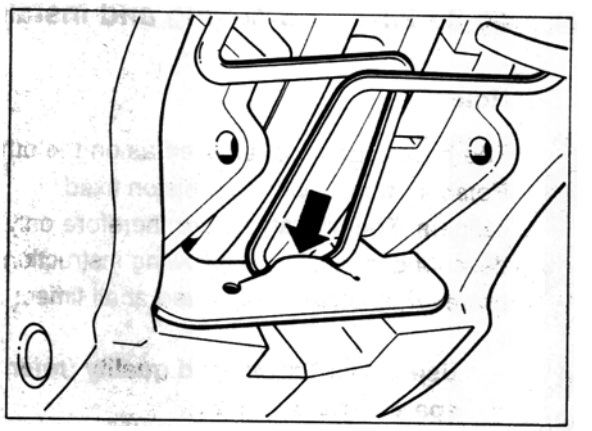

1102-46

Engage warning contact lever and warning contact. If necessary, disengage the cross spring again for this purpose.

With the vehicle stationary, operate brake pedal firmly several times to move the brake pads into the position corresponding to their operating position.
Then check brake fluid level and top up if required.

Brake disc

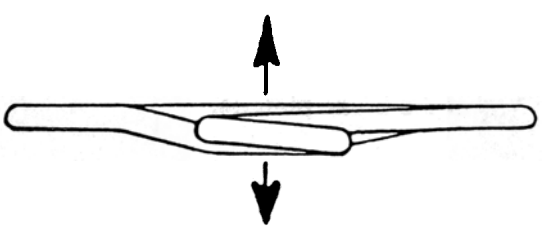

Outside

Running in the brake pads

New brake pads require a running-in period of approx. 200 kms (120 miles). It is only after this period that they reach an optimum friction and wear coefficient. During this period, use of the brakes for full braking from high speeds should be limited to emergency situations only.

46 38 20 Removing and installing rear brake pads

Note

The brake pads are replaced as on the other Porsche models with four-piston fixed calipers. The operations are therefore only described in brief. The following instructions, however, should be observed at all times:

Use correct brake pad quality (refer to spare parts catalog).

Replace damping plates whenever the brake pads are replaced.

The damping plates are provided with an adhesive backing and a protective sheet. **This protective sheet must be removed prior to installation.**

Never apply grease to the brake backplates (backs of brake pads).

Removal

Compress cross spring in the middle and disengage it from its seat. **At the same time, i.e. before compressing the cross spring, press the spring in the holder area towards the brake disc (release spring).** This prevents damage to the holder plate.

Move out warning contact on brake caliper and pull warning contact out of brake pad backplate.

Note

Replace warning contacts if wire core is exposed or ground through. If grinding marks are limited to the plastic section of the warning contact, the contact may be reused.

Pull out brake pads with brake pad impact puller. **Be sure to observe** the following notes:

Move out brake pads along with damping plates. If this is not possible (depending on the degree of wear of the brake pads), use a spatula to separate the damping plates from the pad backplate prior to removal of the pads.
In both cases, start by resetting the brake pads as far as possible using a piston retracting tool. If required, draw off some brake fluid from the reservoir prior to this operation.

Installing

If required, use retracting tool to push pistons back into home position.

Clean seating and guide surface of brake pads inside the caliper with white spirits and a cylindrical brush or special brush. **Take care not to damage the dust caps of the brake pistons.**

Fit **new damping plates** to the pistons. As the damping pads are provided with an adhesive backing and a protective sheet, the **protective sheet must be removed** before fitting the plates.

Install brake pads. **Observe correct brake pad quality.**

Note

Never apply grease to the brake pad backplates (back brake pads). To prevent the brake pads from corroding in the caliper, however, the seating and guide surfaces are protected by a thin grease coat.
Use Optimoly HT (Cu paste) or Plastilube (supplied by Schillings, Postfach 1703, D-73431 Aalen) for this purpose.

Lubricate attachment eyes of the cross spring with Optimoly **TA** or Plastilube.
If necessary, install new cross spring in such a manner that the flat side points towards the brake disc. **Make sure the cross spring (arrow) engages correctly. Do not use force to push the spring into its seat (risk of damaging the holder).**

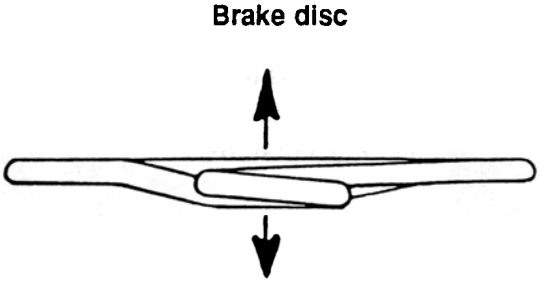

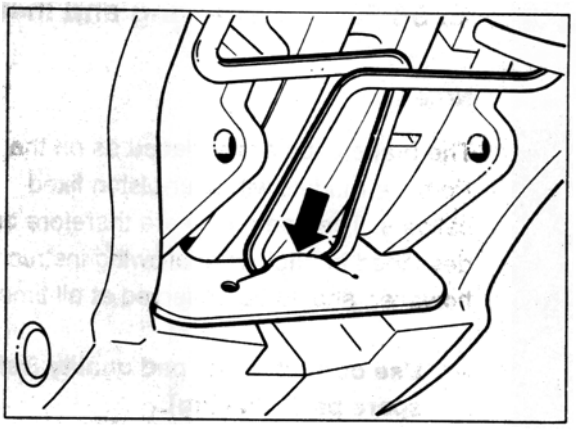

1102-46

Engage warning contact lever and warning contact. If necessary, disengage the cross spring again for this purpose.

With the vehicle stationary, operate brake pedal firmly several times to move the brake pads into the position corresponding to their operating position.
Then check brake fluid level and top up if required.

Running in the brake pads

New brake pads require a running-in period of approx. 200 kms (120 miles). It is only after this period that they reach an optimum friction and wear coefficient. During this period, use of the brakes for full braking from high speeds should be limited to emergency situations only.

46 11 15 Adjusting brake pushrod

The brake pedal does not have a stop.
The fixed clearance in the brake booster is ensured by the fact that the brake pedal does not have any support in the neutral position when the brake pushrod is adjusted correctly. When the brake pedal is actuated manually, a pushrod clearance **of approx. 8 mm** can be felt at the pedal plate.

When the pushrod is adjusted at the pivot (3), the position of the brake pedal changes as well. In this case, the stop light switch adjustment should therefore be checked as well.

The brake pushrod is adjusted correctly when the brake pedal plate is approximately at the same height (± 3 mm) as the clutch pedal plate. (With clutch pedal in neutral position).

Checking stop light switch adjustment

The stop light must light up after a pedal travel of 6-16 mm (measured to the center of the pedal plate).

If the stop light comes on at a pedal travel of less than 6 mm, turn the stop light switch (2) to the right until it is actuated within the tolerance range. (Take care not to damage the electrical wiring and connector) If the adjustment range of the brake light switch is not sufficient, adjust the brake pedal at the pivot of brake pushrod 3 (by shortening the pushrod).

If the stop light switch lights up after a pedal travel of more than 16 mm, adjust the brake pedal at the pivot of the brake pushrod (by increasing the pushrod length) until the stop light switch is actuated within the tolerance range.

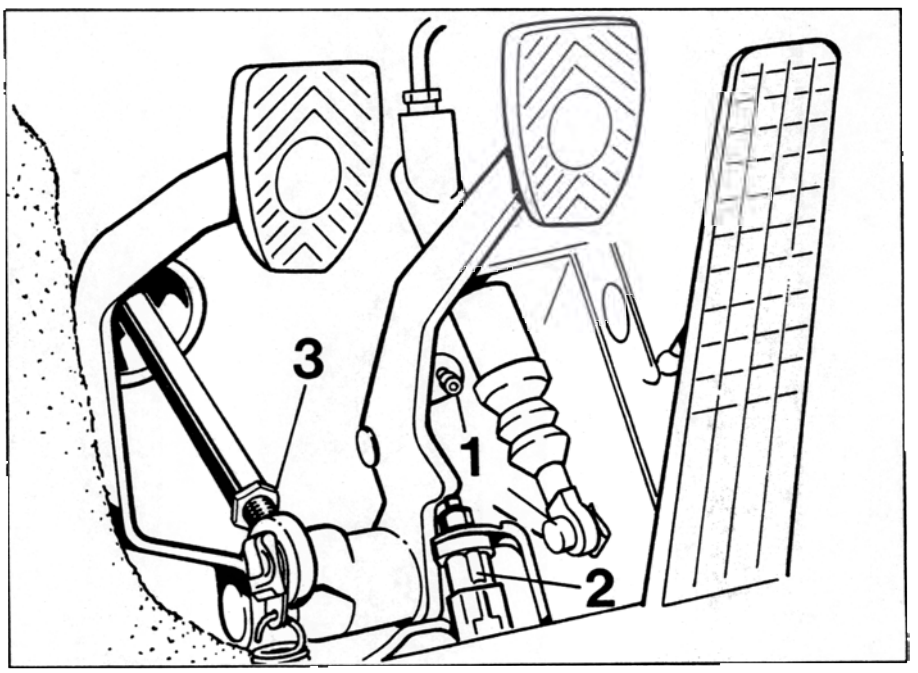

1452-46

46 83 16 Adjusting parking brake shoes

Includes: Adjusting parking brake shoes and parking brake cables

Checking free travel of the parking brake lever

The parking brake is fitted with asbestos-free brake linings. As a rule, the parking brake fitted with asbestos-free brake linings must never be adjusted in such a manner that the lining has to "grind itself free" during operation.

If the brakes do not show any effect when the parking brake lever is pulled up by more than 4 notches using medium force, the parking brake must be adjusted.

Adjusting parking brake

1. Remove rear wheels.

2. Release parking brake lever and push back brake pads of rear axle until the brake disc rotates freely.

3. Undo adjusting nuts at the turnbuckle (arrow) until the cables are no longer under tension.

Note

Remove the cassette box behind the parking brake lever to gain access to the turnbuckle. The fastening screw is located below the rubber insert.

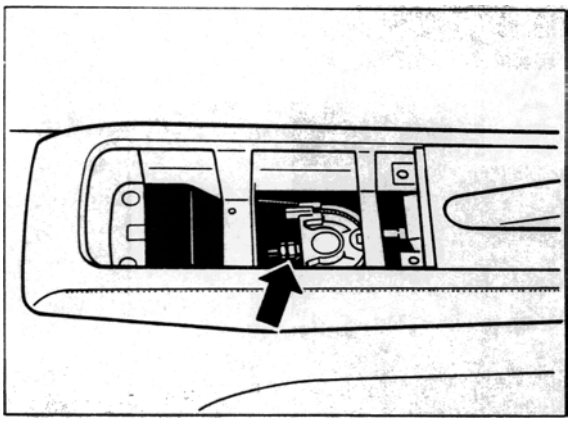

576-46

4. Engage a screwdriver in the hole in the brake disc and adjust the adjuster until the wheel cannot be rotated anymore. Then back off adjuster until the wheel can be rotated freely. *Now back off (loosen) by two more notches.*

5. Pull up parking brake lever by two notches and turn adjusting nut on the turnbuckle until both wheels can just barely be turned manually.

6. Release parking brake lever and check if both wheels rotate freely.

46 50 04 Measuring lateral runout of front brake discs

Concerns: Measuring thickness tolerance of brake discs

1. Measuring requirements: No tilt play of the wheel.

2. Fit adapter plate (Special Tool 9510/1) **to wheel hub.** Tightening torque of wheel nuts (mounting nuts) is 130 Nm (96 ftlb.).

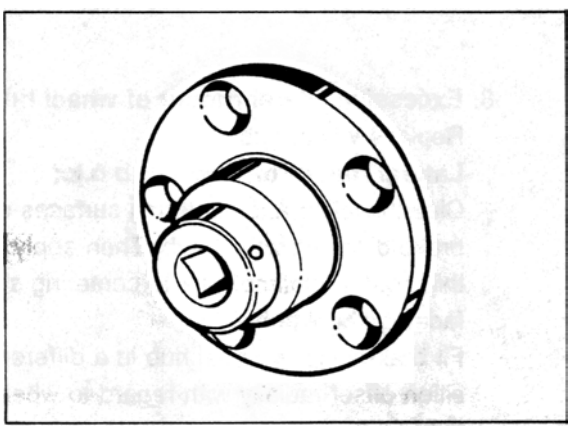

1035 - 46

3. Engage dial gauge holder, e.g. Ate Part No. 03.9314-5500.3/01, into the brake caliper, center out and mount by turning the wing screw.
   Retract brake pads somewhat if the brake disc cannot be rotated freely.
   Do not damage lug for cross spring at the retaining plate of the four-piston fixed calipers when fitting the dial gauge holder.

If required, fit dial gauge holder with Ate conversion kit, Part No. 03.9314-5510.3/01 (longer wing screw and bracket for dial gauge if necessary).

4. Fit dial gauge with a slight preload. Place measuring pointer on largest diameter of brake surface outside of perforation.

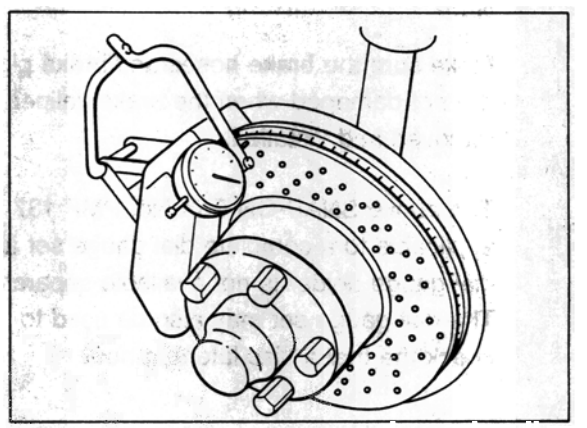

1036B-46

5. Rotate brake disc and read off runout on dial gauge.
   Max. permissible lateral runout of fitted brake disc: **0.09 mm.**

Lateral runout of removed brake disc:	**max. 0.05 mm**
Lateral runout of wheel hub:	**max. 0.04 mm.**

6. If the lateral runout of the brake disc exceeds 0.09 mm, remove the brake disc and check lateral runout of wheel hub. Before dismantling, mark position of disc on wheel hub.

7. Check runout of wheel hub as follows:
   Measure once outside (arrow) and once inside **wheel stud area (5-point measuring process)** of hub face.
   To fit the dial gauge, use either a universal dial gauge holder, e.g. by SNAP - ON (Part No. PMF 137), or a **modified (extended)** dial gauge holder - VW 387.

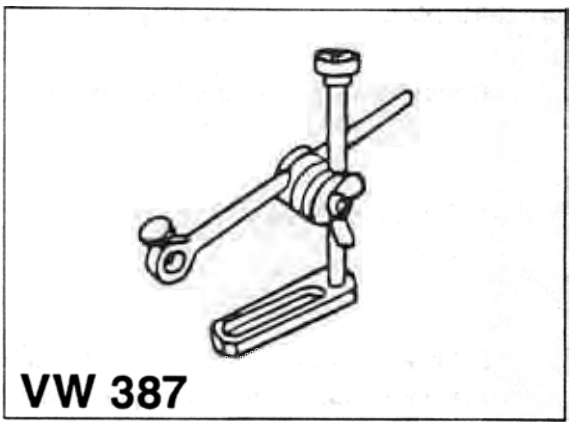

1039 - 46

Note

Make sure the brake hoses and brake pipes are not damaged when the brake caliper is removed and installed.

The above SNAP-ON Part No. PMF 137 is applicable to a complete dial gauge set as the dial gauge holder is not available separately. The dial gauge set may also be used to check the brake disc lateral runout.

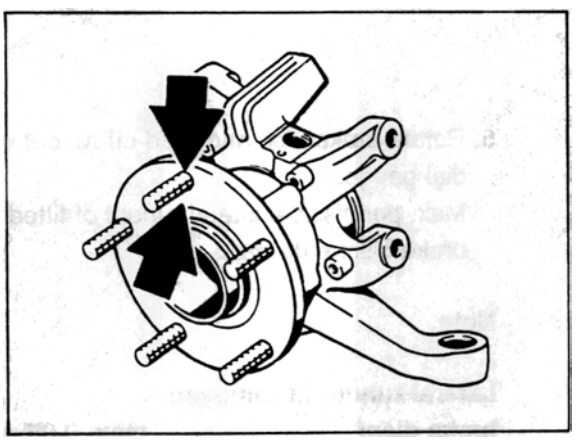

1601-46

8. **Excessive lateral runout of wheel hub:**
   Replace wheel hub.
   Lateral runout of wheel hub o.k.:
   Clean leveling and centering surfaces of brake disc and wheel hub. Then apply a thin coat of Optimoly TA to centering surface of wheel hub.
   Fit brake disc to wheel hub in a different position offset radially with regard to wheel hub.
   Repeat measurement with adapter plate fitted (Special Tool 9510/1).
   If the lateral runout is still in excess of 0.09 mm, the brake disc must be replaced.

Note

If the brake disc runout has been reduced by offsetting the brake disc radially with regard to the wheel hub, one 6 mm countersunk head screw may be omitted if two 6 mm screws had been fitted.

Measuring thickness tolerance of brake disc

Measure brake disc thickness in approx.
8 places within the braking surface (outermost track) using a micrometer.
Thickness tolerance of brake disc:
max. 0.02 mm (New disc: max. 0.01 mm)

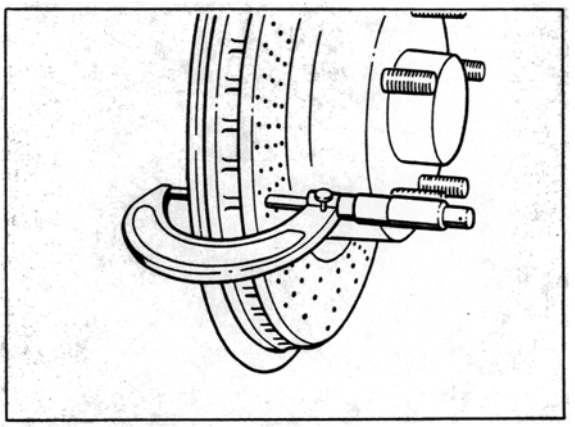

1040B-46

46 53 04 Measuring lateral runout of front brake discs

Concerns: Measuring thickness tolerance of brake discs

Measuring requirements: No tilt play of the wheel.

2. Fit adapter plate (Special Tool 9510/1) **to wheel hub**. Tightening torque of wheel nuts (mounting nuts) is 130 Nm.

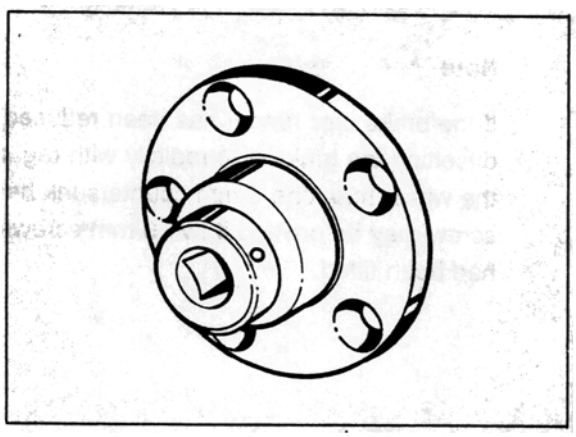

46

3. Engage dial gauge holder, e.g. Ate Part No. 03.9314-5500.3/01, into the brake caliper, center out and attach by turning the wing screw.
   Retract brake pads somewhat if the brake disc cannot be rotated freely.
   Do not damage lug for cross spring on the retaining plate of the four-piston fixed calipers when fitting the dial gauge holder.

If required, fit dial gauge holder with Ate conversion kit, Part No. 03.9314-5510.3/01 (longer wing screw and bracket for dial gauge if necessary).

4. Fit dial gauge with a slight preload. Place measuring pointer on largest diameter of brake surface outside of perforation.

5. Rotate brake disc and read off runout on dial gauge.
   Max. permissible lateral runout of fitted brake disc: **0.09 mm.**

Lateral runout of removed brake disc:	**max. 0.05 mm.**
Lateral runout of wheel hub:	**max. 0.04 mm.**

6. If the lateral runout of the brake disc exceeds 0.09 mm, remove the brake disc and check lateral runout of wheel hub. Before dismantling, mark position of disc on wheel hub.

7. Check runout of wheel hub as follows:
   Measure once outside (arrow) and once inside wheel stud area (5-point measuring process) of hub face.
   To fit the dial gauge, use either a universal dial gauge holder, e.g. by SNAP - ON (Part No. PMF 137), or a **modified (extended)** dial gauge holder - VW 387.

Note

Make sure the brake hoses and brake pipes are not damaged when the brake caliper is removed and installed.

The above SNAP-ON Part No. PMF 137 is applicable to a complete dial gauge set as the dial gauge holder is not available separately. The dial gauge set may also be used to check the brake disc lateral runout.

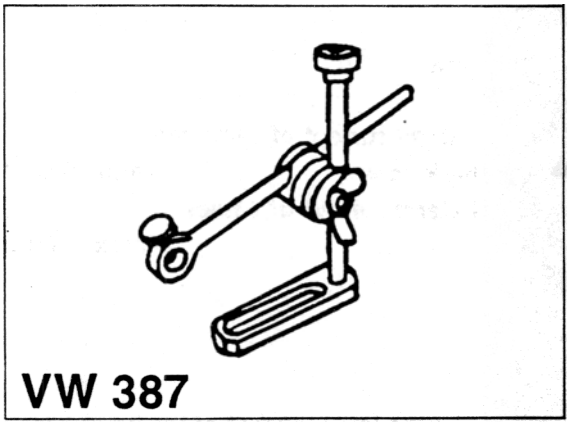

1039 - 46

8. **Excessive lateral runout of wheel hub:**
   Replace wheel hub.
   Lateral runout of wheel hub o.k.:
   Clean leveling and centering surfaces of brake disc and wheel hub. Then apply a thin coat of Optimoly TA to centering surface of wheel hub.
   Fit brake disc to wheel hub in a different position offset radially with regard to wheel hub.
   Repeat measurement with adapter plate fitted (Special Tool 9510/1).
   If the lateral runout is still in excess of 0.09 mm, the brake disc must be replaced.

Note

If the brake disc runout has been reduced by offsetting the brake disc radially with regard to the wheel hub, one 6 mm countersunk head screw may be omitted if two 6 mm screws had been fitted.

Measuring thickness tolerance of brake disc

Measure brake disc thickness in approx. 8 places within the braking surface (outermost track) using a micrometer.
Thickness tolerance of brake disc:
max. 0.02 mm (New disc: max 0.01 mm).

46 50 02 Checking front brake discs (wear assessment)

Includes:

1. **Visual inspection for cracks and crack assessment.**

2. **Checking brake discs for mimimum thickness.**

General

Two criteria may dictate replacement of drilled (perforated) brake discs:

1. **Advanced stage** of cracking in drilled (perforated) friction disc.

2. Disc thickness is below minimum due to wear (material abrasion caused by friction).

Both types of disc wear usually occur in service. **Normally,** brake discs will have to be replaced if the brake disc thickness is below minimum.
Only in rare cases **(if brakes are subjected to racing-like loads for longer periods** or if the friction surface is exposed to heavy temperature fluctuations) will perforation cracks **progress far enough** to require premature disc replacement.
Both condition criteria are described separately in the following sections.

1. Visual inspection for cracks and crack assessment

Note

Perforation cracks are caused by material fatigue due to severe, repeatedly fluctuating heat expansion. Disc temperature fluctuations of this nature that occur especially under racing conditions produce radial cracks in the perforation holes of the friction disc due to material fatigue (alternating thermal expansion). These cracks, on the other hand, will reduce tension in the friction disc to a certain extent, i.e. **crack growth continues only very slowly**.

The maximum admissible perforation hole crack length is 5 mm.

Further growth of perforation hole cracks or cracks at the edges of the friction disc impair braking comfort and reduce disc strength. For this reason, the components affected should be replaced as a precautionary measure.

Checking brake discs for cracks

The brake discs have to be replaced (as a precaution) in the following cases:
Length of perforation hole cracks is **more than 5 mm** (this means that no service life reserves remain if brakes continue to be subjected to severe loads) **and/or** if **cracks appear at the edge of the brake disc** (reduction of braking comfort and of breaking strength).

For examples of crack assessment, refer to page 46-22.

Examples of cracks assessment

Note

The crack thickness has been highlighted (to make identification easier) and therefore the cracks better visible than they actually are.

*Shows a disc subjected to above-average loads; may **remain in vehicle,** however, without any risk.*

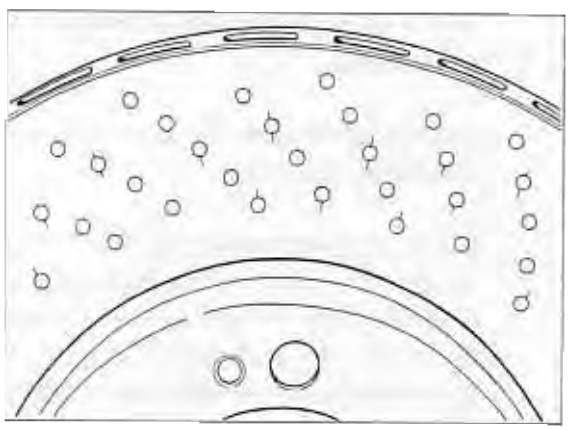

1978A-46

*Some of the perforation hole cracks are more than 7 mm long. Brake disc is **not** suitable for service any more.*
Condition after 1,200 shock brake applications. (Minimum target: 200 shock brake applications).

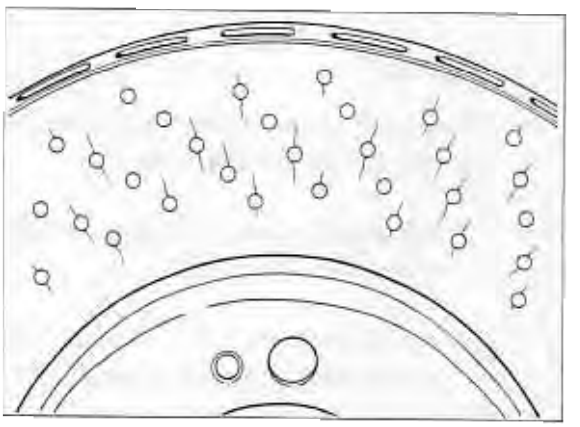

1978B-46

*Brake disc with cracks at edge of friction disc (911 Turbo brake disc); disc is **not** suitable for service anymore.*

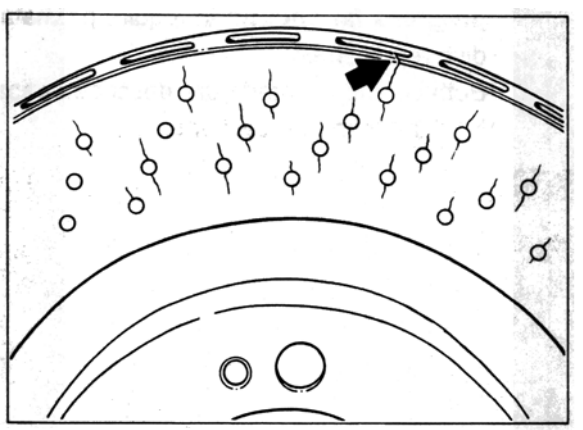

1978C-46

2. Checking brake disc minimum thickness

Notes

Along the innermost and outermost friction disc tracks that **have no holes,** wear of the corresponding brake pad friction area is **lowest** - compared to the center hole area - **if the brakes are subjected to high** contact pressures. As a result, **less severe** braking will lead to a corresponding increase of surface pressure in these areas and, hence, to increased friction disc wear.
The natural ratio of heavy to light braking will produce the typical wear profile of a perforated friction disc in virtually every case (inner and outer, smooth friction edge zone shows greatest wear / refer to Fig. 1979I-46).

As opposed to smooth brake discs where the smallest thickness is measured in the disc center (effective frictional radius), **the minimum thickness** of **perforated brake discs** must always be measured at the inner or outer **track of the friction disc** that is worn to the greatest extent.

Checking minimum brake disc thickness

Use a suitable micrometer to measure the smallest brake disc thickness at one of the two smooth friction edge zones (at the friction edge zone that is worn to the greatest extent).

For the wear limit (minimum thickness), refer to the "Technical Data".

Observe important note on new brake pads on page 46 - 24.

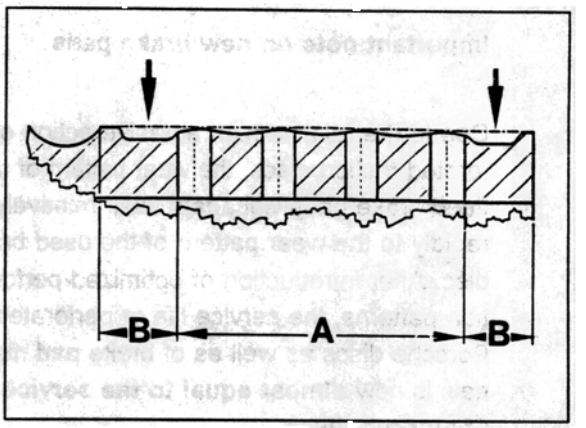

Arrows = area of greatest wear on brake disc friction area
A = perforated friction area
B = smooth friction edge area

Example for area of greatest wear

The figure below shows the typical wear groove pattern (arrows) of a perforated 993 brake disc that was driven up to the wear limit under severe long-term operation (test operation).

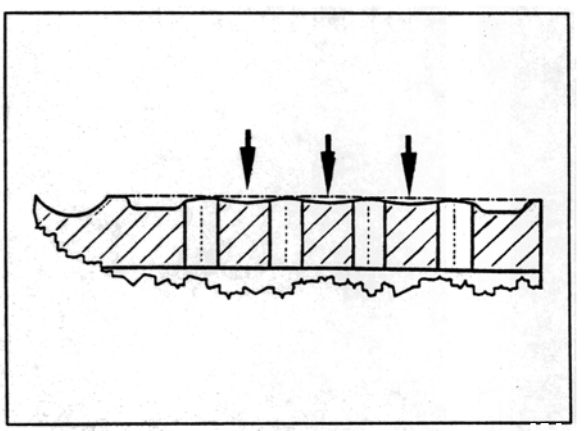

Important note on new brake pads

Due to the relative high abrasive action of perforated friction discs, the wear pattern of newly fitted brake pads will adapt itself relatively rapidly to the wear pattern of the used brake disc. After introduction of optimized perforation patterns, the service life of perforated Porsche discs as well as of brake pad materials is now **almost equal to the service life of smooth discs.**

46 53 02 Checking rear brake discs (wear assessment)

Includes:

1. **Visual inspection for cracks and crack assessment.**

2. **Checking brake discs for minimum thickness.**

General

Two criteria may dictate replacement of drilled (perforated) brake discs:

1. **Advanced stage of cracking** in drilled (perforated) friction disc.

2. Disc thickness is below minimum due to wear (material abrasion caused by friction).

Two types of disc wear usually occur in service. **Normally,** brake discs will have to be replaced if the brake disc thickness is below minimum.
Only in rare cases **(if brakes are subjected to racing-like loads** for longer periods or if the friction surface is exposed to heavy temperature fluctuations) will perforation cracks **progress far enough** to require premature disc replacement.
Both condition criteria are described separately in the following sections.

1. Visual inspection for cracks and crack assessment

Note

Perforation cracks are caused by material fatigue due to severe, repeatedly fluctuating heat expansion. Disc temperature fluctuations of this nature that occur especially under racing conditions produce radial cracks in the perforation holes of the friction disc due to material fatigue (alternating themal expansion). These cracks, on the other hand, will reduce tension of the friction disc to a certain extent, i.e. **crack grwoth continues only very slowly**.

The maximum admissible perforation hole crack length is 5 mm.

Further growth of perforation hole cracks or cracks at the edges of the frictions disc impair braking comfort and reduce disc strength. For this reason, the components affected should be replaced as a precautionary measure.

Checking brake discs for cracks

The brake discs have to be replaced (as a precaution) in the following cases: Length of perforation hole cracks is **more than 5 mm** (this means that no service life reserves remain if brakes continue to be subjected to severe loads) **and/or** if **cracks appear at the edge of the friction disc** (reduction of braking comfort and of breaking strength).

For example of crack assessment, refer to page 46-22.

2. Checking brake disc minimum thickness

Notes

Along the innermost and outermost friction disc tracks **that have no holes,** wear of the corresponding brake pad friction area is **lowest** - compared to the center hole area - **if the brakes are subjected to high** contact pressures. As a result, **less severe** braking will lead to a corresponding increase of surface pressure in these areas and, hence, to increased friction disc wear.
The natural ratio of heavy to light braking will produce the typical wear profile of a perforated friction disc in virtually every case (inner and outer, smooth friction edge zone shows greatest wear / refer to Fig. 1979I-46).

As opposed to smooth brake discs where the smallest thickness is measured in the disc center (effective frictional radius), **minimum thickness** of **perforated brake discs** must always be measured at **inner or outer track of the friction disc** that is worn to the greatest extent.

Checking minimum brake disc thickness

Use a suitable micrometer to measure the smallest brake disc thickness at one of the two smooth friction edge zones (at the friction edge zone that is worn to the greatest extent).

For the wear limit (minimum thickness), refer to the "Technical Data".

Observe important note on new brake pads on page 46 - 24.

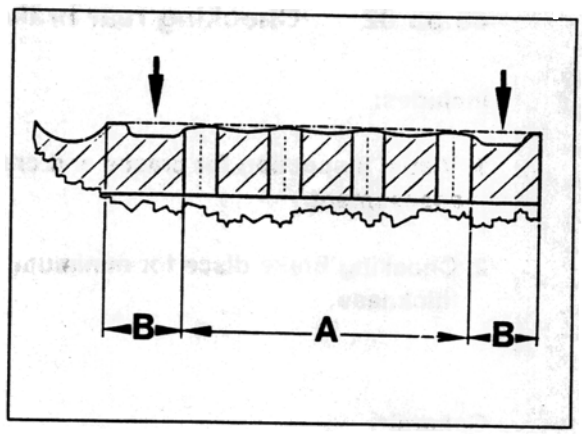

1979I-46

Arrows = area of greatest wear on brake disc friction area
A = perforated friction area
B = smooth friction edge area

Example of area of greatest wear

The figure below shows the typical wear groove pattern (arrows) of a perforated 993 brake disc that was driven up to the wear limit under severe long-term operation (test operation).

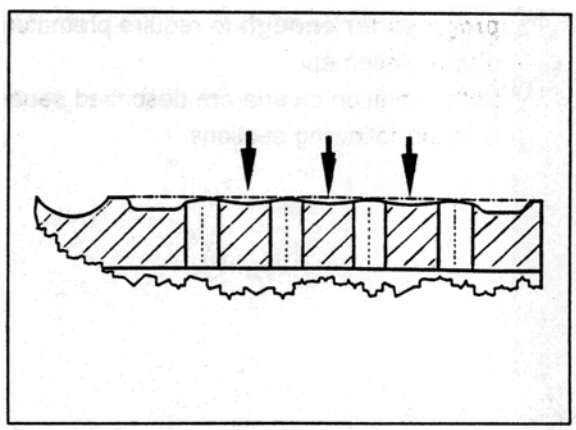

1979II-46

46 50 19 Removing and installing front brake disc

Removal

Take off front wheel.

2. Disconnect brake pipe from brake hose at spring strut and remove brake caliper. Before dismantling the brakes, push down brake pedal with pedal holder to prevent brake fluid from escaping from reservoir. Cover and plug brake hose and brake pipe (to prevent ingress of dirt). Remove retaining spring from brake hose.

3. After having undone the countersunk screw(s), take off brake disc. If the brake disc is binding and cannot be released even by applying light plastic hammer blows, screw two hexagon head bolts evenly into both 8 mm threads of brake disc and press off brake disc.

Installation

1. Check condition of all components and replace if required.

2. Clean end face and centering surface of brake disc and wheel hub. Apply a thin coat of Optimoly TA to centering surface of wheel hub.

3. Fit brake disc.

Be careful not to confuse right-hand and left-hand brake discs during reassembly.
The discs may be identified by their involute shape and part number. The part number is indicated on the brake disc.

Spare part for left-hand side -
3rd group number: uneven digit

Spare part for right-hand side -
3rd group number: even digit

Example:

Left-hand brake disc Part No.:
993.351.043.01

Right-hand brake disc Part No.:
993.351.044.01

4. Fit brake caliper. Tighten **new** bolts of brake caliper to 85 Nm.
Check for correct routing of brake hose and brake pipe.
Bleed front brake circuit.

Note

Replace the mounting bolts (front axle only) whenever the brakes have been dismantled.

46 53 19 Removing and installing rear brake disc

Removal

1. Take off rear wheel.

2. Remove brake caliper from wheel carrier and suspend caliper inside wheel housing (do not open hydraulic brake system).

3. Engage a screwdriver into the hole in the brake disc and turn adjuster in „slackening" direction.
   Lift off brake disc after removing countersunk screw(s).

Installation

1. Clean end face and centering surface of brake disc and wheel hub. Apply a thin coat of Optimoly TA to centering surface of wheel hub.

2. Fit brake disc (right and left-hand brake discs are identical).

3. Adjust parking brake shoes and parking brake cables (page 46 - 13).
   Fit brake caliper. Tighten mounting bolts to 85 Nm.

46 83 20 Removing and installing parking brake shoes

Removal

1. Take off rear wheel. Remove brake caliper from wheel carrier and suspend in wheel housing (do not open hydraulic brake system).

2. Engage a screwdriver into the hole in the brake disc and turn adjuster in "slackening" direction. Lift off brake disc after removing countersunk screw(s).

3. Remove compression springs (No. 2), adjuster (No. 3/4) and return spring (No. 5). Remove parking brake shoes and return spring (No. 6).

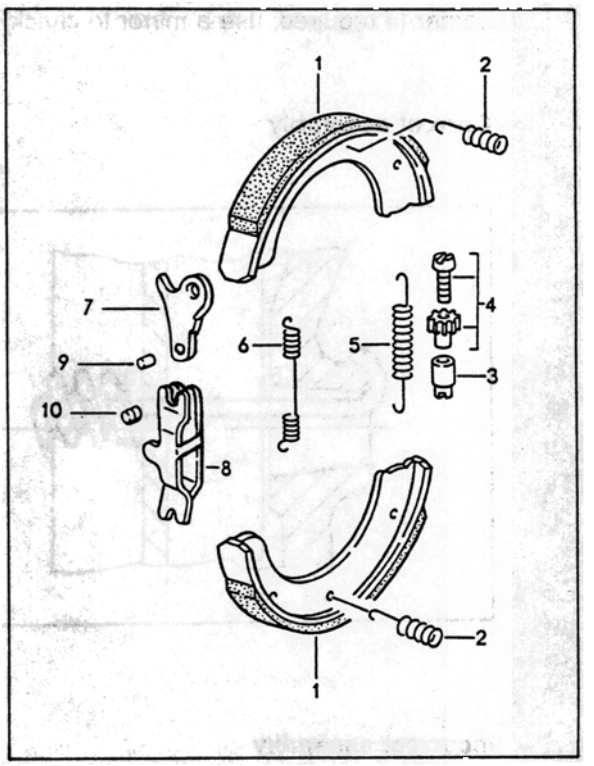

2005-46

Installation

1. Apply a thin coat of grease to adjuster (No. 3/4), operating lever pin (spreader lever) and sliding surfaces of parking brake shoes.

2. Install operating lever (spreader lever), brake shoes, return springs, compression springs and adjuster.

Note

Make sure that the hooks (curved spring ends) of the compression springs are seated correctly around the flange of the wheel carrier (if required, use a mirror to check).

Correct assembly

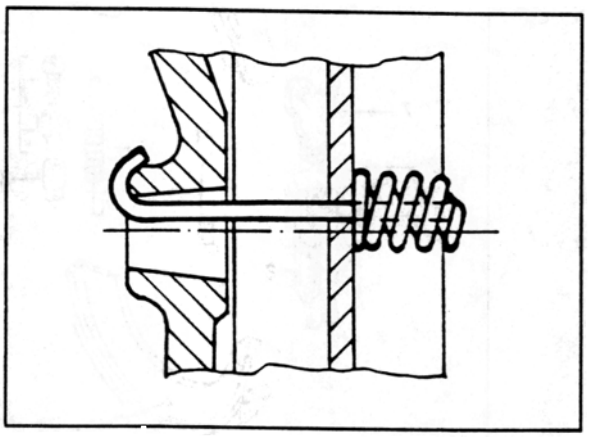

764/2

Incorrect assembly

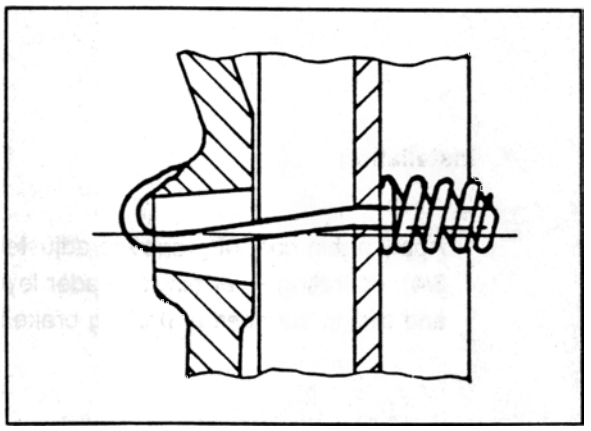

764/1

3. Check parking brake shoes, adjuster, return springs, compression springs and spreader lever again for correct seating, making corrections as required.

4. Clean end and centering surfaces of brake disc and wheel hub. Apply a thin coat of Optimoly TA to centering surface of wheel hub.

5. Fit brake disc (right and left-hand brake discs are identical).

6. Adjust parking brake shoes and parking brake cables (page 46 - 13).
   Fit brake caliper. Tighten mounting bolts to 85 Nm.

47 Tightening torques for brake hydraulics

Location	Thread	Tightening torque Nm (ftlb.)
Booster circuit (Hydraulic brake booster)		
Brake pressure pipe to pressure accumulator, brake booster and pump unit	M 10 x 1	14 - 16 (steel pipes) (10 - 12)
Screw-on fitting (miniature measurement fitting to pressure accumulator	M 10 x 1	14 - 16 (10 - 12)
Pump unit mounting	M 6	10 - 13 (7 - 9.5)
Pressure warning switch to pump unit	M 25	26 (19)
Brake master cylinder circuits/ hydraulic unit		
Brake pressure pipe to brake master cylinder, brake hose, brake power controller, distributor unit, brake caliper and hydraulic unit.	M 10 x 1 M 12 x 1	12-14 (9-10) (copper pipe) 20 (15) (copper pipe)
Brake power controller to hydraulic unit	M 10 x 1	14 (10)
Hydraulic unit to bracket	M 6	10 (7; screw)
Hydraulic unit to body	M 6	4 (3; plastic nut)
Reservoir to body	M 6	10 (7)
Adapter to body	M 6	10 (7)

Location	Thread	Tightening torque Nm (ftlb.)
Brake caliper		
Connecting pipe to brake caliper	M 10 x 1	12 (9)
Bleeder screw to brake caliper	M 10 x 1	8 - 12 (6 - 9)
Brake booster unit with vacuum booster		
Brake booster (with mounting saddle and bracket) to side member	M 8	23 (17)
Brake booster to mounting bracket	M 8	23 (17)
Brake master cylinder to bracket and brake booster	M 8	23 (17)
Brake booster unit with hydraulic booster		
Brake booster to firewall	M 8	23 (17)
Brake master cylinder to brake booster adapter	M 8	23 (17)

* Do not remove adapter

47 Notes on four-piston fixed caliper

Assembly notes

The brake caliper halves must not be separated from each other.

Piston seals, dirt scraper rings and spring plates may be replaced on an assembled fixed caliper.
To remove the spring plates, heat the mounting screws to approx. 150° C (300° F) with a hot air gun since the screws have been installed with locking cement. Use new screws for refitting.
These screws are attached to the repair kit.
The screw type has been changed and **Torx srews are now used instead of hexagon socket screws**. When stocks of the old kits have been used up, only kits with **Torx screws** will be available.
Caution: Apply **Loctite 222** to the screw threads. This applies to both types of screw. The bonding agent previously specified **must not be used.**
In the case of repair work, this also **applies retroactively to other brake calipers**.

Use Unisilikon TK 44 N 2 brake cylinder paste to fit the brake pistons. (This is also applicable **retroactively** for the repair **of other brake calipers**). Unisilikon paste is available from the Parts department (Part No. 000.043.117.00 / 50 g tube).

To be able to check the correct installation position of the brake calipers with the brake pads installed, the fixed calipers have an arrow indicating the direction of rotation of the brake disc.
The arrow is visible near the Porsche logo on the outside of the caliper, and above the brake pipe connection hole on the inside of the caliper.

When the brake calipers are removed, **the brake caliper mounting screws should be replaced on the front axle.**

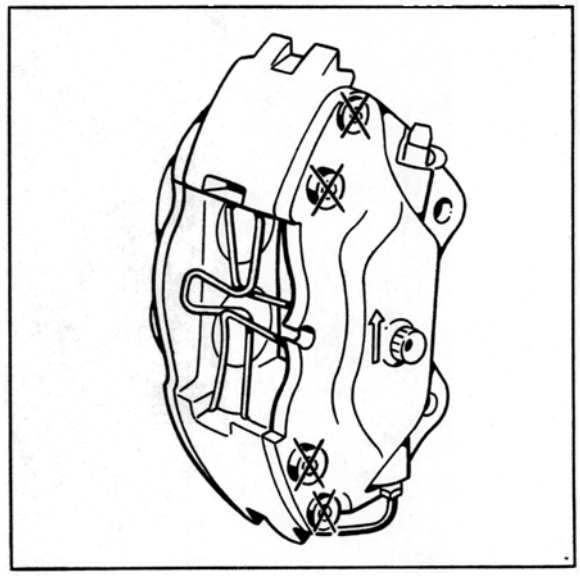

1503-47

X = Never undo or tighten those screws

47 01 07 Bleeding the brakes (vacuum brake booster)

Caution: The description below applies only to vehicles with vacuum brake booster.

Important notes about brake fluid

Use only new brake fluid DOT 4.
Observe brake-fluid quality.

The brake fluid DOT 4 Type 200 used until now (change interval 3 years) is **no longer available** via the Porsche Parts Servie.

"**Super DOT 4**" brake fluid will be delivered instead. The **change interval** for this brake fluid is **2 years**.

Vehicles with brake systems filled with the previous brake fluid **must be filled with Super DOT 4 at the next scheduled brake-fluid change.**

This brake fluid is available under the following part number:
Container volume **1** litre = 000.043.203.**66**
Container volume **30** litres = 000.043.203.**67**

Miscibility of the brake fluids:
The brake fluid DOT 4 Type 200 used until now is **miscible** with Super DOT 4. This means that, until the next scheduled brake-fluid change, vehicles with brake systems filled with the previous brake fluid can be topped up with **Super DOT 4.**
Both brake fluids are coloured amber.

Note about water absorption:
As little as 2% water content in the brake fluid reduces the boiling point by approx. 60° C.

Procedure for bleeding

Fill reservoir to its top edge with new brake fluid. **Attach bleeding devie to the reservoir.**
Clamp the overflow hose / bleeding hose shut with a hose clamp. The overflow hose / bleeding hose has been omitted as of October 1995; refer to Technical Information, Group 4, No. 16/95.
Switch on the bleeding device. Bleed pressure approximately 1.5 bar.

Printed in Germany 20.1997

Proceed with bleeding the brake calipers. Sequence: RH rear / LH rear / RH front / LH front.
Open each bleeding valve until clear, bubble-free brake fluid escapes. Make sure that both bleeder valves are bled at each brake caliper.

Use a recipient bottle to be able to check the escaping brake fluid for cleanliness, freedom from air bubbles and to check the quantity of brake fluid used.

Observe the following details when bleeding the brakes after fitting a new brake master cylinder: Open right-hand rear bleeder valves, then depress brake pedal several times. After depressing the pedal, keep it in the bottom position for 2 to 3 seconds and release pedal slowly. Repeat this procedure two or three times on the left rear / right front / right rear wheels. This causes all air bubbles to be removed from the brake master cylinder.

Note

Also carry out this operation if the hydraulic brake system has been drained virtually completely or if air is found to remain trapped in the system after bleeding (e.g. if pedal travel is excessive).
Caution: Double the pumping cycles on high-mileage vehicles or older vehicles but use only half the brake master cylinder stroke in these cases (to avoid damage to the master cylinder, i.e. primary cups).

Switch off and disconnect bleeding device. Top up brake fluid if required.

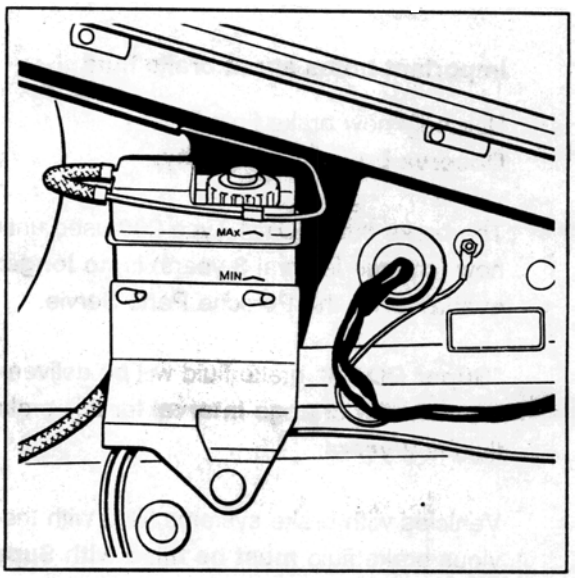

1471-47

Note

When replacing the hydraulic unit on vehicles with ABD (**A**utomatic **B**rake **D**ifferential) **or if the hydraulic unit has been removed,** the ABD circuit (in the hydraulic unit) must be bled as well (refer to p. 47 - 7).

Bleeding the ABD Circuit

Preparatory operations: Bleed brakes in conventional manner (page 47 - 5/6)

Leave the bleeding device connected (switched on) to bleed the ABD circuit. Bleeding pressure approx. 1.5...2.0 bar. Overflow hose (for venting) on expansion tank is clamped off with a hose.

Connect **System Tester 9288** to the diagnostic socket. Switch on ignition. Select "Bleed" menu.

Open right-hand rear bleeder valve (use recipient bottle).

Press Start button on System Tester. This causes certain functions in the hydraulic unit to be started (return feed pump, ASV valve and USV valve are triggered).
Bleed until the escaping brake fluid is free from air bubbles.
Additionally and during the whole bleeding process, depress brake pedal (at least 10 times) across the full pedal stroke (to the pedal stop) (pumping).
Warning: On high-mileage or older vehicles, double the pump cycles and use only half the brake master cylinder stroke (to avoid damage to the master brake cylinder/primary cup).

Close right-hand rear bleeder valve. Then immediately actuate Stop button taste on System Tester.

Switch off ignition and disconnect System Tester.

Correct brake fluid level if required.

47 08 55 Changing brake fluid (Vacuum brake booster)

Caution: The description below is only applicable to vehicles with vacuum brake booster.

Important inforamtion

Use only new DOT 4 brake fluid. **Observe change intervals and specified brake fluid grade. Refer to Page 47 - 5 for further information.**
Total brake fluid change quantity **approx. 1 liter.**

Brake fluid changing precedure

- Top up reservoir with fresh brake fluid to upper edge. **Connect bleeding device to reservoir.**
  Clamp the overflow hose / bleeding hose shut with a hose clamp. The overflow hose / bleeding hose has been omitted as of October 1995; refer to Technical Information, Group 4, No. 16/95.
  Switch on bleeding device. Bleeding pressure approx. 1.5 bar.

Proceed with brake fluid change on the brake calipers (no particular sequence required).
Open each bleeder valve until clear, bubble-free brake fluid escapes or until the specified change quality per caliper has been reached
(approx. 250 cm^3). Note that both bleeder valves have to be bled at each brake caliper.

Use a recipient bottle to be able to check the escaping brake fluid for cleanliness, freedom from air bubbles and to check the quantity of brake fluid used.

Also drain some brake fluid at the bleeder valve of the clutch slave cylinder (approx. 50 c.c.).

Switch off and disconnect bleeding device. Top up brake fluid if required.

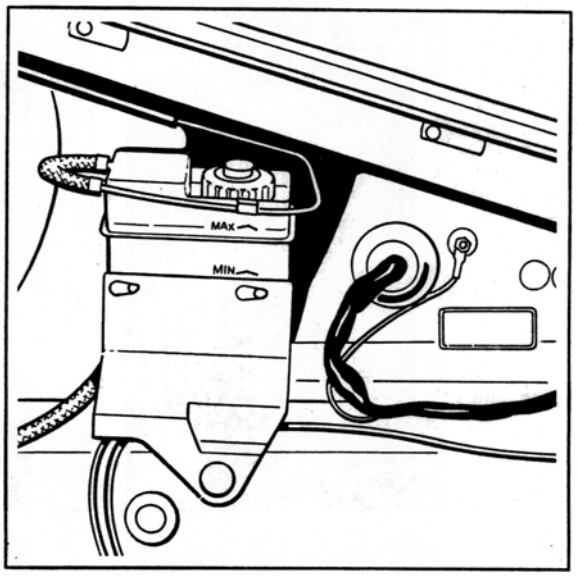

1471-47

47 01 07 Bleeding the brakes (hydraulic brake booster)

Caution: The following description is only applicable to vehicles fitted with a hydraulic brake booster.

Important notes about brake fluid

Use only new brake fluid DOT 4.
Observe brake-fluid quality.

The brake fluid DOT 4 Type 200 used until now (change interval 3 years) is **no longer available** via the Porsche Parts Service.

"Super DOT 4" brake fluid will be delivered instead. The **change interval** for this brake fluid is **2 years.**

Vehicles with brake systems filled with the previous brake fluid **must be filled with SUPER DOT 4 at the next scheduled brake-fluid change.**

The brake fluid is available under the following part number:
Container volume **1** litre = 000.043.203.**66**
Container volume **30** litres = 000.043.203.**67**

Miscibility of the brake fluids:
The brake fluid DOT 4 Type 200 used until now is **miscible** with Super DOT 4. This means that, until the next scheduled brake-fluid change, vehicles with brake systems filled with the previous brake fluid can be topped up with **Super DOT 4.**
Both brake fluids are coloured amber.

Bleeding procedure / subdivision

1. **Bleeding the brake master cylinder circuits**
   (from page 47-12).
   Includes: Partial bleeding (simplified bleeding) of brake booster circuit (provided that **no** booster circuit components have been dismantled).
   If parts of the booster circuit have been dismantled, start by bleeding the booster circuit completely (from page 47-15).

2. **Bleeding the ABD circuit** (ABD = Automatic Brake Differential) in the hydraulic unit if the hydraulic has been replaced or removed (page 47-14).

3. **Bleeding the brake booster circuit**
   if parts of the booster circuit or the system (including the suction side of the pump unit) have been opened (from page 47-15).

Re- 1: Bleeding the brake master cylinder circuits

Includes: Partial bleeding (simplified bleeding) of the brake booster circuit.

Important notes

Depressurize booster circuit prior to bleeding.
Do **not** depressurize **by actuating the brake pedal** but rather at the bleeding valve of the pressure accumulator.
Caution: Start by filling the accumulator completely (with ignition key in position 1, actuate brake pedal until pump starts to run). After the pump has switched off, **pull off electrical connector** and release pressure completely from accumulator vent valve. **Open bleeder valve slowly and keep bleeder hose in place.**
Caution: A pressure of up to 180 bar is present in the system.
Wear goggles and protective gloves!

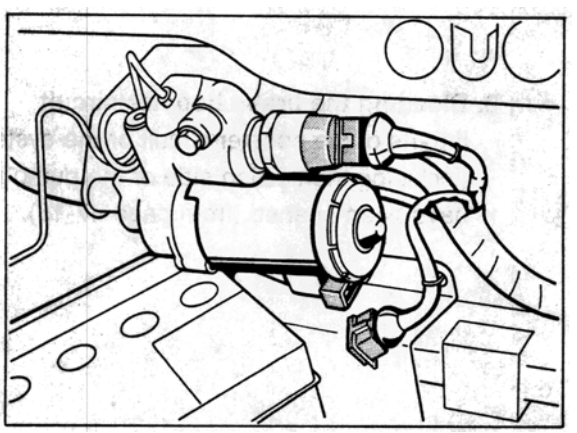

348-47

To allow the brake fluid to be changed in a rapid and practical manner, a filling and bleeding device should be used.

Bleeding procedure

After the pressure has been **released** from the booster circuit, top up with fresh brake fluid to upper edge of reservoir. **Connect bleeder device to reservoir.**
Connect overflow hose (block vent with hose clamp).
Switch on bleeder device. Bleeding pressure approx. 1.5 bar.

Bleed booster circuit partially as follows (simplified bleeding):
Open bleeder valve at pressure accumulator (use recipient bottle). Connect electrical connector to pump. As soon as the escaping brake fluid is free from air bubbles, pull off electrical connector and close bleeder valve.

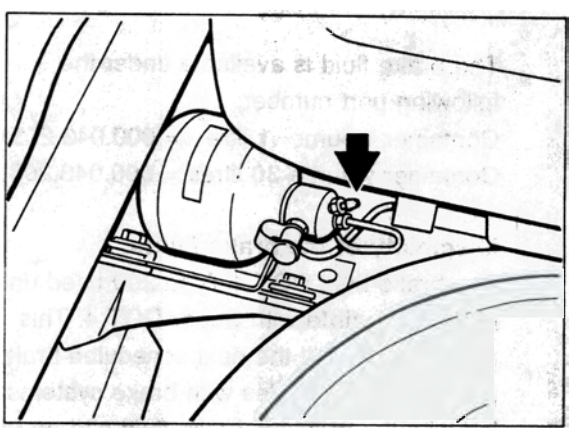

1980-47

For the following bleeding processes, the booster circuit remains depressurized.

Proceed by bleeding the brake calipers. Bleeding sequence: Rear right / rear left / front right / front left.
Open each bleeder valve until clear, bubble-free brake fluid escapes. Note that each caliper must be bled at both bleeder valves.

Use a recipient bottle to allow the escaping brake fluid to be checked accurately for cleanliness and freedom from bubbles and to determine the quantity of brake fluid used.

After a new brake master cylinder has been fitted, proceed as follows during the bleeding process: Open rear right bleeder valves and depress brake pedal fully several times. Keep pedal depressed for 2 to 3 seconds each time and release pedal slowly.
Repeat this process in the following sequence: Rear left, front right / front left.
This allows all air bubbles to be removed from the brake master cylinder.

Also proceed in this manner if the hydraulic brake system has been drained virtually completely or if residual air remains in the system after bleeding has been completed (excessive pedal travel).
Caution: Double the pumping cycles on high-mileage vehicles or older vehicles but use only half the brake master cylinder stroke in these cases (to avoid damage to the master cylinder, i.e. primary cups).

Complete bleeding (continue with the next item) or continue by bleeding the ABD circuit, **if required** (refer to page 47 - 14).

Switch off and disconnect bleeder device.
Remove hose clamp from overflow hose (vent).

Fill pressure accumulator completely by reconnecting the electrical connector.

After the pump unit has switched off, check brake fluid level. **Never top up beyond the "Max. mark".**

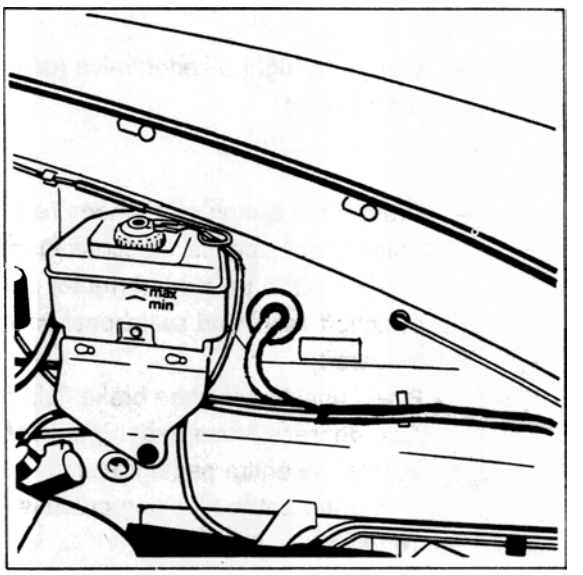

2003-47

Printed in Germany - 7. 1994

Re- 2: Bleeding the ABD circuit

Preparation: Bleed brakes in conventional manner (for master cylinder circuits, refer to p. 47-12 ...13).

The bleeder device remains connected (switched on) when the ABD circuit is bled. **In addition, the booster circuit must be depressurized.**
Bleeding pressure: approx. 1.5 to 2.0 bar.
Overflow hose (vent) is blocked with hose clamp at brake fluid reservoir.

Connect System Tester 9288 to diagnostic socket. Switch on ignition. Select "Bleed" menu.

Open rear right bleeder valve (use recipient bottle).

Press Start button on System Tester.
This causes specific functions in the hydraulic unit to be started (return pump, switchoff valve and switchover valve are triggered).
Bleed until bubble-free brake fluid escapes.
Also depress brake pedal (pump at pedal) across the entire pedal travel (to the stop) during the entire bleeding process (at least 10 times).
Caution: Double the pumping cycles on high-mileage vehicles or older vehicles but use only half the brake master cylinder stroke in these cases (to avoid damage to the master cylinder, i.e. primary cups).

Close rear right bleeder valve.
Then press Stop button immediately on System Tester.

Switch off ignition and disconnect System Tester.
Switch off and disconnect bleeder device.
Remove hose clamp from overflow hose (vent).

Fill pressure accumulator completely by reconnecting the electrical connector.

Correct brake fluid level after the pump unit has switched off. Never top up beyond the **"Max. mark"**.

Re- 3: Bleeding the brake booster circuit

Notes

The bleeding process includes two steps. The first step may be omitted in certain cases.

1st step: Preparatory operations for initial fitting or refitting.

2nd step: Bleeding the pressure accumulator.

After replacing or removing the pump unit and pressure accumulator, follow these instructions carefully. If a different process is selected, the brake fluid may foam excessively.

Depressurize booster circuit before working on this cirucit (e.g. to remove or fit components).
To depressurize, pull off electrical connector from pressurizing pump (pump unit) (refer to drawing 348-47) and actuate brake pedal approx. 25 times. The system is depressurized as soon as the brake pedal feels hard when it is actuated.
To pull off and reconnect the electrical connector on the pressurizing pump, press on center of the connector locking clamp.

Preparatory operations for initial fitting or refitting: 1st step

This operation is only required if the pump unit and pressure accumulator have been replaced or refitted and if the suction line has been opened or if the reservoir was empty prior to the bleeding process.
In all other cases, start with the 2nd step (bleeding the pressure accumulator).

Make sure that the electrical connector has been pulled off at the pressurizing pump (pump unit).

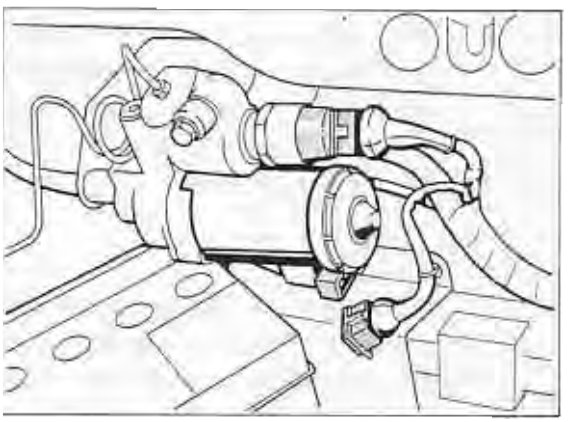

348-47

Fill reservoir with fresh brake fluid up to the upper edge immediately after fitting the components.
Connect bleeder device to reservoir.
Block overflow hose (vent) with hose clamp. Switch on bleeder device.
Bleeding pressure approx. 1.5 bar.

Printed in Germany - 7. 1994

Note

While the bleeder device is connected, the brake pedal must not be depressed as the return line may otherwise be pushed out of the rubber plug of the brake booster.

Continue by bleeding the pressure accumulator.

Bleeding the pressure accumulator: 2nd step

If step 1 has not been carried out, release any residual accumulator pressure as follows: Pull off the electrical connector from the pressurizing pump (pump unit) and open bleeder valve at the pressure accumulator slowly with the recipient bottle remaining connected. Make sure bleeder hose remains in place.

Caution:

A pressure of up to 180 bar is present at the bleeder valve of the pressure accumulator. Open bleeder valve very carefully. Make sure the bleeder hose is safely in place!
Wear goggles and protective gloves!

Unless this has already been done (if the system was already depressurized), connect recipient bottle **to pressure accumulator bleeder valve and open valve**.

Set ignition key to position 1 (required to start pump operation).
Connect electrical connector to pump. As soon as no bubbles are visible anymore at the transparent bleeder hose of the recipient bottle, disconnect electrical connector and close bleeder valve.

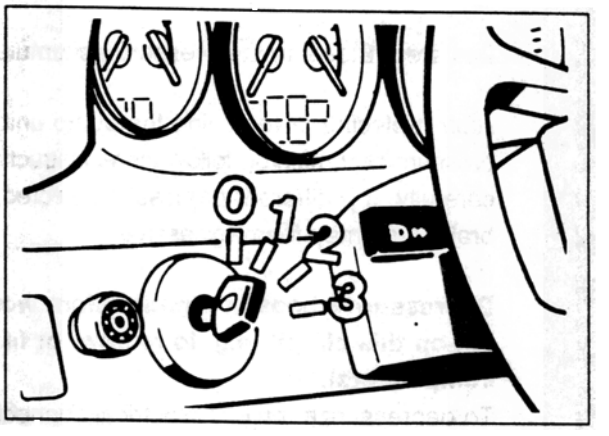

2004-47

Note

If the filler and bleeder device has not yet been connected, check fluid level of reservoir between the individual bleeding operations and top up with new brake fluid if required.

Fill pressure accumulator completely (bleeder valve closed). Connect electrical connector. As soon as the pump has switched off audibly, **pull off electrical connector** and release pressure completely at bleeder valve of pressure accumulator. Open bleeder valve slowly and keep bleeder hose firmly in place.
Caution: A pressure of up to 180 bar is present in the system.
Wear goggles and protective gloves!

Repeat the latter operation (fill pressure accumulator completely and release accumulator pressure completely) once or twice (brake fluid must be free from air bubbles).

After making sure that all air bubbles have been evacuated by the bleeding process, tighten bleeder valve securely and reconnect electrical connector at pump.
Make sure that the connector engages correctly.

Switch off and disconnect bleeder device if it is still running and remove hose clamp from overflow hose (vent).

Operate brake pedal several times. (Make sure the bleeder device is not connected.)

After the pump unit has switched off, correct brake fluid level. **Never top up beyond the "Max. mark".**

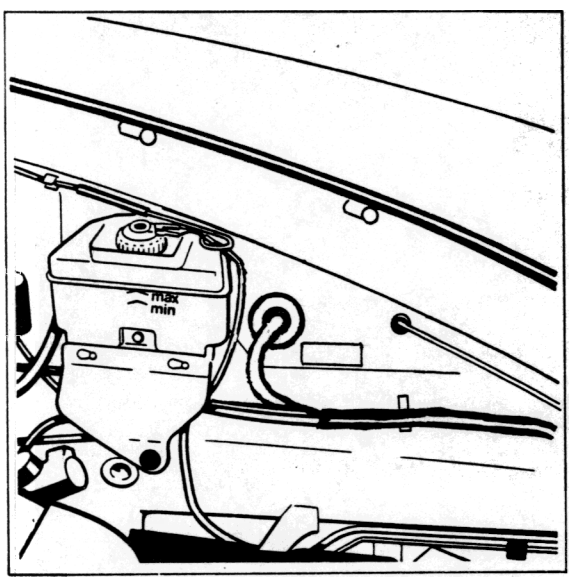

2003-47

47 08 55 Changing the brake fluid (hydraulic brake booster)

Important notes

Use only new DOT 4 brake fluid. **Observe correct fluid change intervals and fluid grade. Refer to Page 47 - 11 for further information.**
Total brake fluid quantity for brake fluid change **approx. 1.6 liters.**

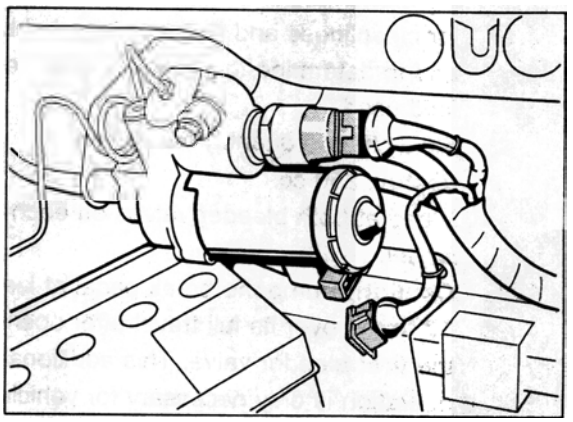

348-47

Brake fluid change procedure

Important notes

Depressurize booster circuit before changing the brake fluid.
Do not depressurize by actuating the brake pedal but rather at the bleeding valve of the pressure accumulator. This will allow part of the old brake fluid to be drained.
Caution: Start by filling the accumulator completely (with ignition key in position 1, actuate brake pedal until pump starts to run). After the pump has switched off, **pull off electrical connector** and release pressure completely from accumulator vent valve. **Open bleeder valve slowly and keep bleeder hose in place.**
Caution: A pressure of up to 180 bar is present in the system.
Wear goggles and protective gloves!

To allow the brake fluid to be changed in a rapid and practical manner, a filling and bleeding device should be used.

If the booster circuit has not been depressurized completely, do not actuate the brake pedal while the bleeder device is connected.

Changing the brake fluid: 1st step

With the booster circuit depressurized, top up with fresh brake fluid to upper edge of reservoir. **Connect bleeder device to reservoir.**
Clamp the overlow hose / bleeding hose shut with a hose clamp. The overflow hose / bleeding hose has been omitted as of October 1995; refer to Technical Information, Group 4, No. 16/95.
Switch on bleeder device. Bleeding pressure: approx. 1.5 bar.

Use a recipient bottle to allow the escaping brake fluid to be checked accurately for cleanliness and freedom from bubbles and to determine the quantity of brake fluid used.
Fluid change quantity per wheel: approx. 250 cc.
Bleed at both bleeder valves on each wheel.
Caution: Pump the break pedal at least **10 times** over its full travel after opening the **first** bleeder valve. This additional operation is only necessary for vehicles with hydraulic brake boosters and then only for the first bleeder valve.

Also drain some brake fluid from bleeder valve of clutch slave cylinder (approx. 50 cc).

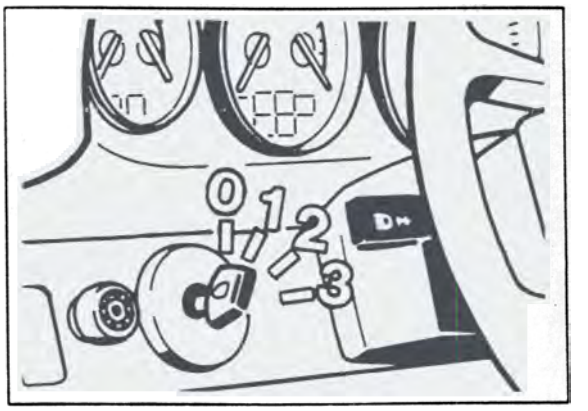

2004-47

Switch off and disconnect bleeder device.
Remove hose clamp from overflow hose (vent).

Fill pressure accumulator completely by connecting the electrical connector.

Changing the brake fluid: 2nd step

With the bleeder device switched on, drain approx. 200 cc brake fluid at pressure accumulator. For this purpose, connect electrical connector to pressurizing pump with ignition key in position 1. As soon as the specified quantity has been drained, pull off connector and close bleeder valve.

After the pump unit has switched off, correct brake fluid level. **Never top up beyond the "Max. mark".**

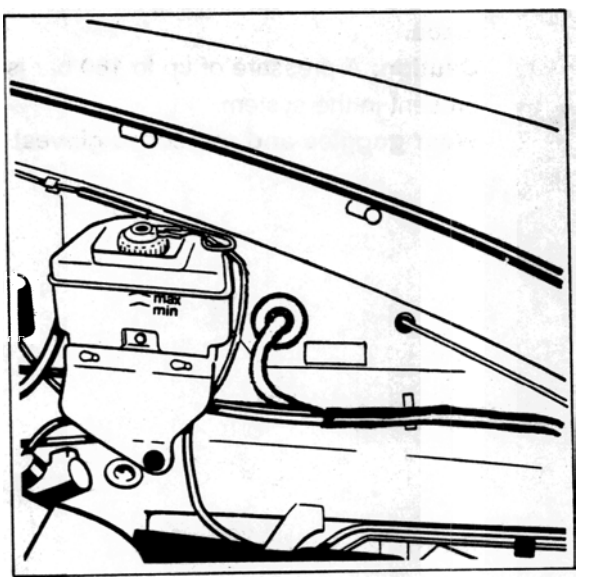

2003-47

47 01 01 Pressure test on brake booster circuit

Overview

1. General

2. Pressure gauge connection

3. Tests

4. Nominal values / Notes

1. General

The pressure test on the brake booster circuit tests the following points:

- Freedom from leaks of the booster circuit (any internal leak can thus be localized)

- Gas filling pressure of the pressure accumulator

  Switching points for the booster circuit (brake pressure warning lamp and operating pressure). This is controlled by the pressure warning switch of the pump assembly.

2. Pressure gauge connection

- Depressurize the booster circuit. To do this, disconnect the electrical plug at the pressure pump (pump assembly) and then press the brake pedal approx. 25 times. The system is depressurized as soon as the brake pedal feels hard when operated. In order to disconnect and plug the electrical plug onto the pressure pump, press in the center on the plug locking clip. The cover in the area of the pump unit need not be removed.

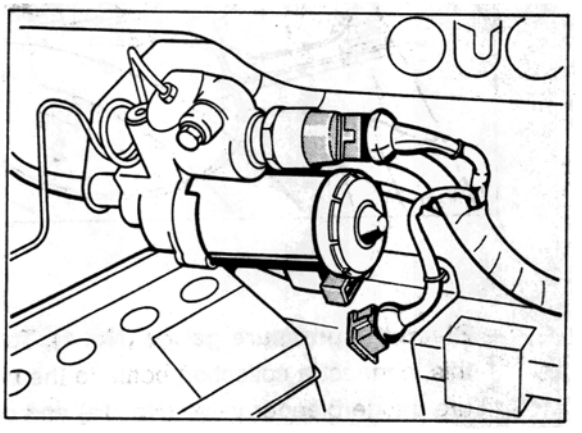

348-47

- Connect pressure gauge 9509 (No.1) at the screw coupling (mini measuring connection No. 3) of the pressure accumulator with the high-pressure measuring line 9509/2 (No.2).

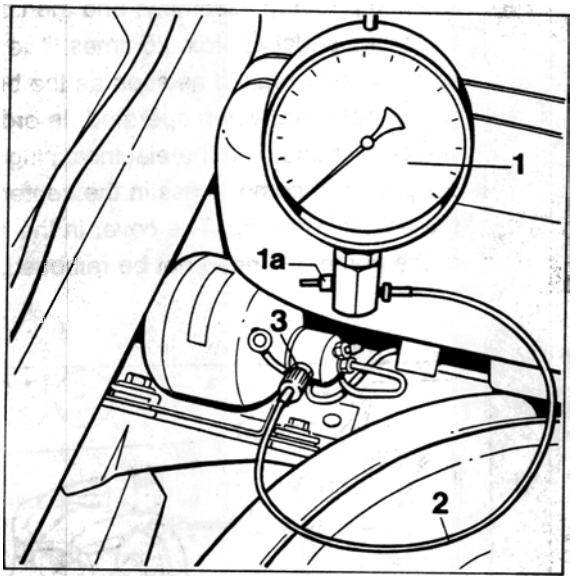

2249-47

– **Bleed the pressure gauge (No. 1).** To do this, connect a collection bottle to the pressure gauge bleeder valve (No. 1a) and open the valve.
Move the ignition key to position 1 (necessary for pump operation).
Plug the electrical plug onto the pump. **Disconnect the electrical plug and close the bleeder valve** as soon as no air bubbles are visible anymore at the transparent bleeder line of the collection bottle.

Note

Before removing the manometer **after** the test, the booster circuit must be depressurized.

3. Tests

Note

Operation of the pump is regulated by means of the ignition key for testing purposes.

Position 0 = Pump off
Position 1 = Pump on until switched off by the pressure warning switch.

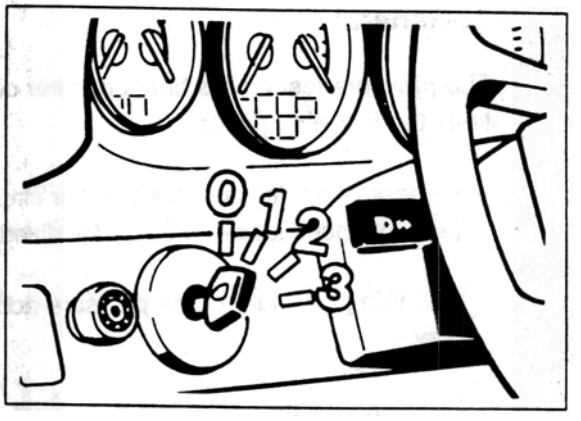

2004-47

– In ignition key position 0, plug the electrical plug onto the pump. Locate the pressure gauge in a position where it can be seen.

– For the tests, it is expedient to observe the following sequence:

a. Pressure accumulator - Gas filling pressure

b. Switching points for the brake pressure warning lamp

c. Cut-in and cut-out points of the pump

d. Leak test

Turn the ignition key to position 1 (pump starts up).

a. Gas filling pressure of the pressure accumulator.

Turn the ignition key to position 0 at approx. 100 bar.

Operate the brake pedal several times and observe the pressure gauge. When the indicator falls rapidly towards zero, the filling pressure of the pressure reservoir has been reached. For required values, see page 47-24.

Note

Sensitively operate the brake pedal shortly before the gas filling pressure is reached.

b. Checking the switching points for the brake pressure warning lamp.

Pressure build-up:

Start the engine and observe the warning lamp. Immediately turn the ignition key to 0 position at the instant when the warning lamp goes out. Read off the pressure on the pressure gauge.

Pressure reduction:

Produce a system pressure of approx. 140 bar. Disconnect the plug at the pressure pump.
Start the engine
Operate the brake pedal sensitively several times until the warning lamp lights up. Read off the pressure on the pressure gauge. Refer to Page 47 - 24 for nominal values.

c. Checking the switching points of the pressure pump

Cut-out pressure: Turn the ignition key to position 1. The electrical plug must be plugged onto the pressure pump for this.
Read off the pressure on the pressure gauge **immediately** after independent pump cut-out.

Cut-in pressure: Turn ignition key to position 1. Wait until the pump switches off independently if appropriate. Press the brake pedal as often as required until the pump starts up. Read off the pressure on the pressure gauge at this instant.
Refer to Page 47-24 for nominal values.

d. Checking the pressure loss of the booster circuit.
Turn the ignition key to position 1. Wait until the pump cuts out independently. Press the brake pedal as often as required until the pump starts up again. After independent cut-out of the pump, turn the ignition key to position 0 and disconnect the electrical plug at the pump. No longer operate the brake pedal. Measure the pressure drop over the course of time. Refer to Page 47 - 24 for permitted values.

Note

Depressurize the booster circuit before removing the pressure gauge.

4. Nominal values / Notes

Nominal values		Notes
Pressure accumulator - Gas filling pressure		Replace pressure accumulator if the gas filling pressure has reached or fallen below the wear limit.
new	80 ± 5 bar	
Wear limit	30 bar	
Switching points of the pressure warning switch		If the actual values deviate from the nominal values, replace the pressure warning switch
Brake pressure warning lamp warning point		
for pressure build-up	up to approx. 115 bar max. up to 133 bar	Read off the pressure immediately after independent cut-out of the pump
for presssure reduction	as from 105+2/–5 bar	
Cut-out point of the pump		
at the latest	at approx. 180 bar	
at the earliest	at approx. 160 bar	
Cut-in point of the pump (after pressure reduction)	140 + 5 / – 6 bar	
Freedom from leaks of the booster circuit		Fill the pressure accumulator completely 2 x previously (start the pump running again after 1st cut-out by operating the brake pedal). Then turn the ignition key to position 0 and disconnect the electrical plug at the pump. No longer operate the brake pedal now. External leak: Retighten lines or replace the corresponding parts.
Pressure drop, starting from the cut-out point of the pump (precondition: nominal value is achieved)		
not below 140 bar in 30 minutes not below 100 bar in 3 hours		Possible internal leaks: – Brake booster – Pump assembly First check the brake booster. To do this, dismantle the line at the pressure accumulator (in depressurized condition). Close off the pressure accumulator with a mini-measuring connection or suitable bleeder valve. Repeat the test. Then replace the localized/damaged parts and bleed the system.
		Caution: Wear protective goggles and protective gloves when decreasing the pressure via the bleeder valve.

47 66 19 Removing and installing pressure warning switch

Tools

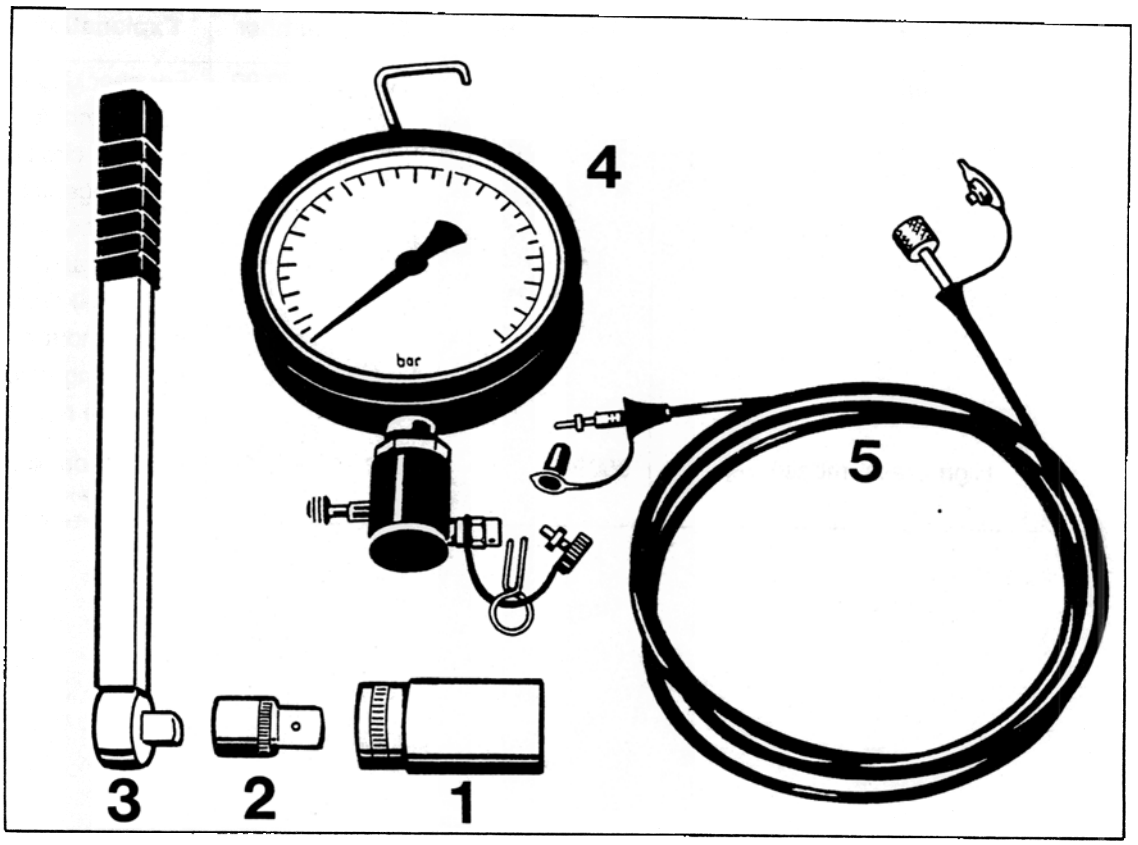

No.	Designation	Special tool	Order number	Explanation
1	Socket wrench insert	9524	000.721.952.40	
2	Reducing adapter from 3/4" to 1/2" or 3/8" according to torque wrench used			available from automotive trade suppliers; to connect torque wrench with socket wrench insert
3	Self-releasing torque wrench covering torque range between 20 (15) and 30 Nm (22 ftlb)			available from automotive trade suppliers; Tightening torque for pressure warning switch 26 Nm (19 ftlb)

Tools

No.	Designation	Special tool	Order number	Explanation
4	Pressure gage	9509	000.721.950.90	For checking leakage and switching point (booster circuit pressure tests) together with measuring line 9509/2 (No. 5) or measuring line 9509/1 (-) on earlier cars without miniature measuring union on pressure reservoir
5	High press. measuring line	9509/2	000.721.950.92	connection to pressure reservoir

Removing and installing pressure warning switch

Removing

1. With the ignition switch in position 0, pull off both plugs at the pump assembly.

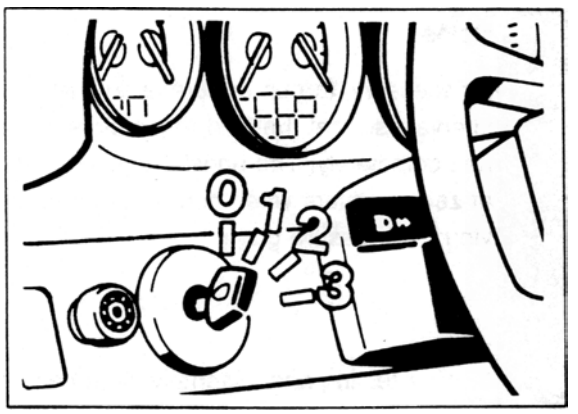

2004-47

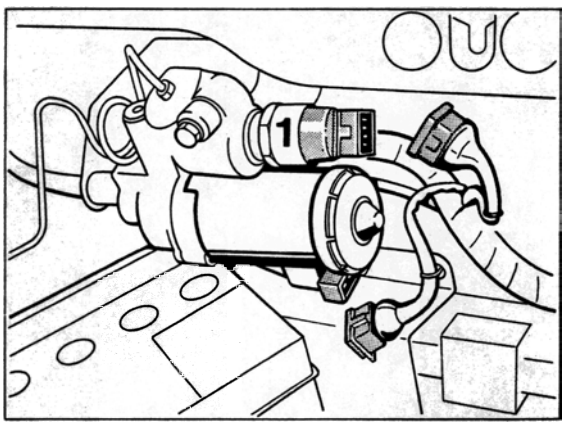

607-47

2. Evacuate all pressure from the system by pressing the brake pedal down about 25 times. The system is at zero pressure when the brake pedal feels hard as it is pressed.

3. Remove press. warning switch (No. 1 /Drawing 607-47) with special tool 9524. Prevent the pump assembly from turning while loosening the switch.
   Warning: first clean the area round the pressure warning switch and cover it with non-fluffy cleaning cloths to trap the small amount of residual brake fluid which emerges.

Installing

1. Screw in the pressure warning switch and tighten to a torque of 26 Nm (19 ftlb). Renew the O-ring if necessary. Prevent the pump assembly from turning while tightening.

Note

Wet the sealing ring with brake fluid only. Never use brake cylinder paste. Absolute cleanliness is essential. Use only non-fluffy cleaning cloths.

2. If there is an electrical fault at the pressure warning switch, always exchange hydraulic pump relay (no. 3) as well.

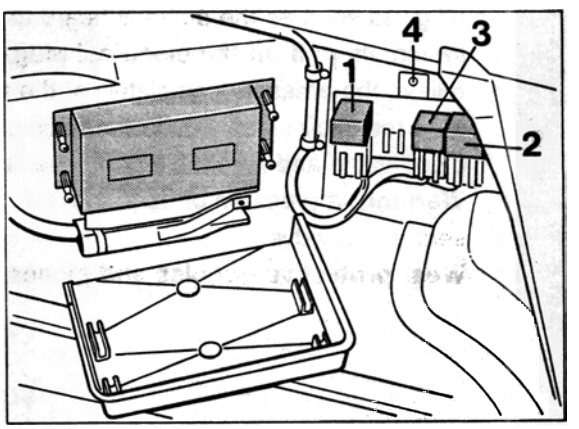

1773C-47

3. Attach plug to pressure warning switch (arrow).

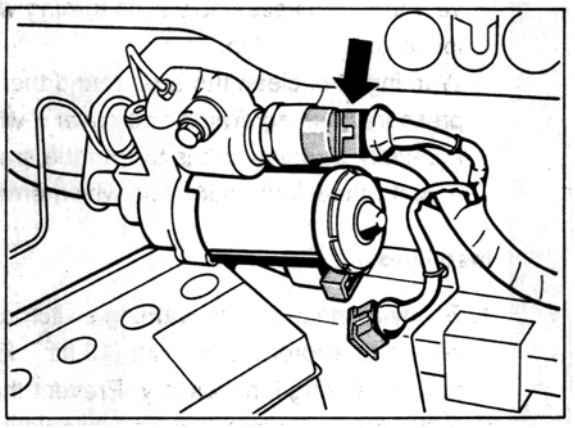

348A-47

4. Partly bleed the booster circuit as follows:
   Open the bleed valve at the pressure reservoir. Attach the electrical plug to the pump. As soon as brake fluid emerges free from air bubbles, pull off the electrical plug and close the bleed valve.
   Next, charge the pressure reservoir completely. To do this, attach the electrical plug. As soon as the pump is heard to switch off, **pull off the electrical plug** and relieve the pressure completely at the pressure reservoir bleed valve. Slowly open the bleed valve and hold the bleed hose firmly.
   Warning: a pressure of up to 180 bar is present at the valve.
   Wear protective goggles and gloves.

5. Connect pressure gauge SW 9509 to the pressure reservoir and check the switching points of the pressure warning switch and also for leakage in the booster circuit.
   The precise working proced. and desired values are stated on Page 47 - 21...47 - 24 (Pressure tests on booster circuit).

Notes

If necessary, top up the brake fluid level at intervals so that the fluid reservoir is not drained completely. The booster circuit must be at zero pressure when connecting and removing the pressure gage.

6. After testing and assembly work has been completed, correct the brake fluid level (Page 47 - 20). with the pressure reservoir completely filled.

47 90 19 Removing and installing relay for hydraulic pump

General

Three relays for controlling the return pump and the hydraulic pump (for the brake booster circuit) and for power supply to the solenoid valves in the hydraulic unit are installed on a mount in the front right part of the luggage compartment.

1 = Relay for return pump
2 = Relay for solenoid valves
3 = Relay for hydraulic pump
4 = Blind rivet

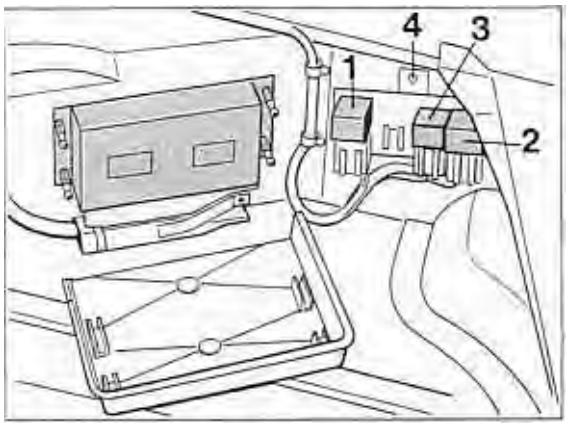

1773C-47

Removal and installation

Remove and insert the relay (no. 3) with the ignition switched off.
Make sure that the connectors are firmly seated in the relay socket (the connectors may have slipped slightly down out of the relay socket).

Note

In order to remove the lid on the relay mount, the pin in the blind rivet must be pressed out and the mount must be completely removed. The pin can be removed by applying compressed air behind the mounting plate.

48 Tightening torques for steering

Location	Thread	Tightening torque Nm (ftlb.)
Steering gear to crossmember	M 8*	45* (33)
Tie rod (ball joint) to steering arm	M 12	65 (48)
Universal joint (steering shaft) to steering gear	M 8	23*** (17)
Tie rod to ball joint and joint fork (lock nut)	M 14	45 (33)
Tie rod to steering rack	M 14	70 (52)
Steering wheel to steering shaft	M 16	45 (33)
Steering outer tube to body**	M 6	10 (7)
Pressure and return line to steering gear	M 12	20 (15)
Pressure line to power pump	M 14	30 (22)
Pressure line to pressure line	M 14	25 (18)

Replace screws after every removal job. Use only genuine spare parts (microencapsulated screws). Since 1995, **12.9 screws have been used** (previously 10.9 screws). For replacement, **only 12.9 screws must be installed** on all 993 vehicles. The threads of the screws and the washers must be clean and fat-free. Remove microencapsulation residuals from the threaded bores required to fix the steering gear (use Aceton for cleaning, then blow out bores with compressed air).

Before tightening, screw down the screws evenly until the fastening clamps almost touch the cross member. During final tightening, **start with the screws for the short leg (of the cross member)** and pull them tight, so these surfaces will be the first to fit tightly.

** **Break off shear bolts after functional test (locking bolt of ignition lock) and visual inspection of all parts.**

*** Replace fit bolt whenever it has been undone.

Printed in Germany - 16, 1996

48 Checking and assembly operations on the power steering system

General

Damage to the power steering can be traced to lack of oil in the hydraulic system. Due to the high system pressure in the hydraulic cicuit, even minor leaks may cause fluid loss and damage to the power pump.

Grunting noises when turning the steering wheel or foaming in the reservoir are indicative of lack of oil and/or air drawn in. Before topping up the reservoir, however, repair any leaks remaining on the intake side and replace the defective part on the pressure side.

Important note

The rack-and-pinion steering gear and the power pump must not be repaired or dismantled.
The steering gear is available as a spare part. See spare parts catalogue.

Power steering pump toothed belt

The pretension of the toothed belt cannot be adjusted.

Checking the steering system for leaks (visual inspection)

With the engine idling, turn the steering wheel to the stop position and keep it in this position. This causes the maximum possible line pressure to be built up.

Check all line connections for leaks in this position and retighten if required.

Test for approx. 10 sec. If the test is run for a longer time, allow a short break approx. every 10 seconds.

Checking fluid level in the power steering

The reservoir is fitted on the right in the engine compartment.

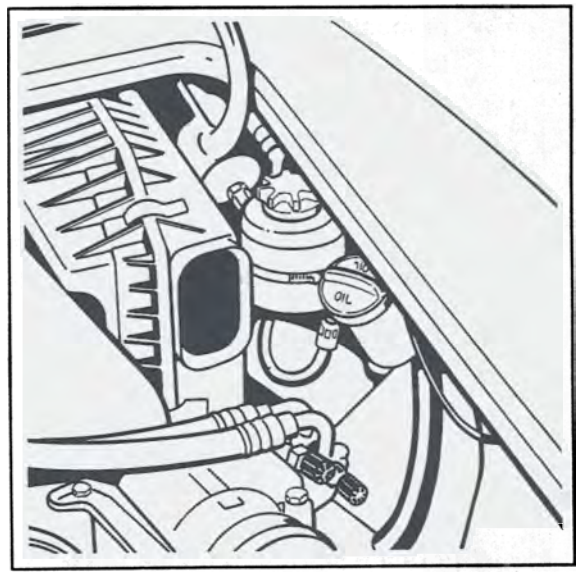

Check the fluid level* **with the engine idling and without operating the steering system.**
Correct fluid level:
In the case of reservoirs **with** a transparent upper section (first version used), the fluid level must be between the min. and max. marks on the reservoir.
If the reservoir does **not** have a transparent upper section, the level must be between the two marks on the dipstick attached to the lid. Unscrew the lid and wipe the dipstick clean. Screw the lid back on, remove it again and check the fluid level.

Bleeding the steering system

1. **To fill the whole system after fitting new steering assemblies, lines or heavy hydraulic fluid loss, start the engine briefly several times and switch off engine immediately after it has started. During this operation, the fluid level in the reservoir falls rapidly. The fluid level in the reservoir quickly decreases during this process, and hydraulic fluid* therfore must be filled in continously. Never allow the reservoir to be drawn empty.**

2. If the fluid level in the reservoir no longer falls when the engine is started briefly, start the engine and run it at idle speed.

3. Turn steering wheel several times rapidly from stop to stop to allow the air to escape from the cylinders. When the pistons have reached the end positions of their travel, do not pull harder on the steering wheel than would be required to turn the steering wheel (this helps to prevent unnecessary pressure build-up).

4. Observe fluid level during this operation. If level continues to fall, top up until the fluid level remains constant in the reservoir and until no air bubbles rise in the reservoir when the steering wheel is turned.

Note

The oil level in the reservoir must not rise by more than 10 mm when the engine is stopped. If the fluid levels deviate from each other by more than 10 mm when the engine is stopped or running, respectively, excessive air is trapped in the hydraulic fluid.

5. With the engine running at idle speed, top up to correct fluid level (between min. and max. marks) without turning the steering wheel.

*** Porsche started to fill the brake systems with Pentosin CHF 11 S (green) in March 1996. ATF was used before then. Pentosin and ATF are miscible. This means that Pentosin can be used to top up the fluid level in 993 vehicles before the aforementioned introduction date. On vehicles with Pentosin filling, always fill or top up the brake system with Pentosin.**

48 10 19 Removing and installing steering wheel (airbag)

Removal

1. Disconnect battery and cover terminal or battery.

2. Remove driver airbag unit, undoing both fastening screws with a socket Torx T 30 wrench.
   Disconnect connector at airbag unit and at steering wheel (for signal horn).

Note

Replace the fastening screws whenever they have been undone.
The airbag unit must always be stowed away with the padded side facing up.
When the airbag unit remains removed for a longer perdiod of time, it must be stored in a safe place.
Observe safety specifications.

3. Undo hexagon head nut and lift off complete with spring washer.

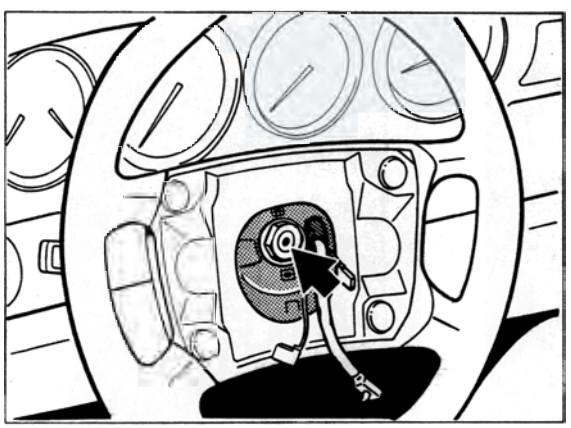

1602-48

4. Turn wheel to straight-ahead position. Then mark position of steering wheel to steering shaft (for reassembly). Take off steering wheel (in straight-ahead position).

Note

To prevent **inadvertent turning of the contact unit (CU)** when the steering wheel is removed, the CU is locked automatically when the steering wheel is pulled back.
In the same manner, the CU is unlocked automatically when the steering wheel is placed back into position.

Installation

1. Fit steering wheel with the wheels in straight-ahead position or according to the dismantling marks in such a manner that the upper steering wheel spokes are horizontal.
   Caution: Do not trap the wire of the contact unit.

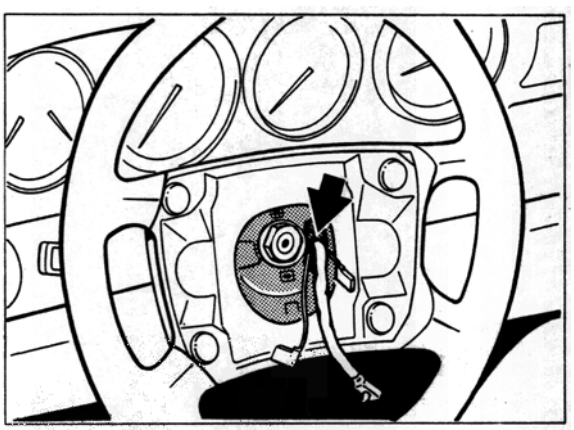

1602-48

2. Fit hexagon head nut with spring washer and tighten to 45 Nm (33 ftlb.).

3. Install driver's airbag. Use new fastening screws.
   Tightening torque: 10 Nm (7 ftlb.)

4. Check operation of signal horn.

48 10 19 Removing and installing Carrera RS steering wheel (Momo)

Removal

1. Remove the upholstered trim from the steering wheel (see following text).
   Caution: Do not dismantle the lid with the Porsche emblem.

   First pull (lift) the top and bottom of the horizontal spokes on the trim over the steering wheel spokes.
   Then pull the trim over the vertical (lower) spoke (lift it over the steering wheel spoke).
   Unplug horn connector from upholstered trim.

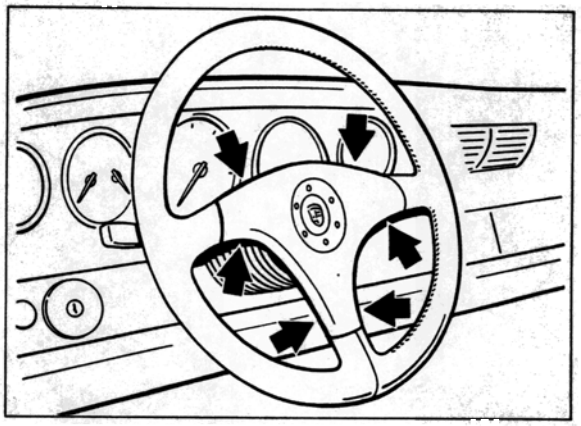

2195-48

2. Unscrew hexagonal nut (arrow / Fig. 2196-48) and remove it together with lock washer.

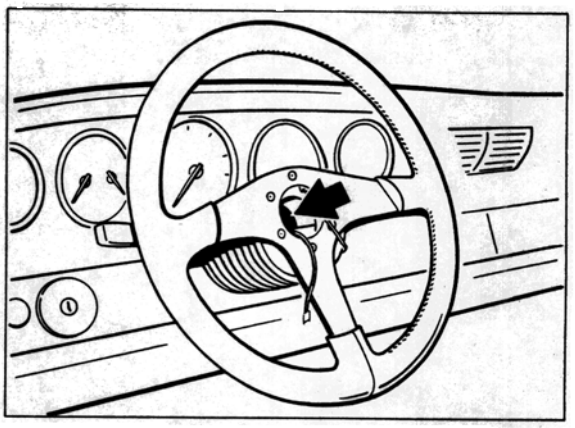

2196-48

3. Turn wheels of vehicle to straight ahead position.
   Then mark the position of the steering wheel in relation to the steering shaft (for re-installation). Take off steering wheel (in straight ahead position).

Installation

1. With the vehicle wheels in the straight ahead position (as marked during removal) install the steering wheel with the upper spokes horizontal.

2. Install hexagonal nut with lock washer and tighten with 45 Nm (33.2 ftlb).

3. Install upholstered trim. First press (lift) it over the upper (horizontal) spokes. Then press (lift) it over the lower (vertical) steering wheel spoke.

4. Check horn for correct functioning.

48 Replacing the steering in case of accident damage

A. General

Accidents or **driving conditions similar to accidents** may cause various types of damage to steering gears. **If the steering gear looks undamaged from the outside**, tracing of damage is sometimes difficult and requires considerable effort. This, however, constitutes an incalculable risk for the safety of the vehicle as it may lead to steering failure.

Due to the fact that a comprehensive check of all steering gear components requires considerable effort and is therefore not normally justifiable or even impossible to be carried out with standard shop equipment, the condition of other components that are easier to be checked must be considered as a **replacement solution**.

The following guidelines (item B) should be observed to decide if the steering gear of an accident vehicle requires replacement or may be used as it is.

B. Assessing the condition of the steering gear of an accident vehicle

The steering **may** remain on the car, **if all of the following conditions are met**:

No visible damage to front-axle components such as wheels, spring struts, wheel carriers, control arms, steering arms, tie-rods, front-axle crossmember, front-axle side members, steering shaft as well as body mounts of suspension components.

No inadmissible increase of torque and no binding or sticking when turning the steering gear from lock to lock. When turning the steering gear, the front wheels must move freely (i.e. front axle must be lifted); in addition, the engine must be off (no power supply to servo-pump).

Admissible tolerances of suspension alignment must not be exceeded.

The steering box **must be replaced or exchanged if any of the following points apply**:

Damage to steering gear is visible or can be felt

Burning damage (e.g. bellows of steering burnt)

Permanent deformation or cracking of:

Steering gear mounts

Tie rods

Steering arms

Spring struts
(except for 928)

Wheel carriers

Control arms

Front-axle side members

Front-axle crossmember

If the above criteria are **not** sufficient for a decision, it is recommended to exchange or replace the steering gear.

C. Exceptional regulations / order processing

If the **steering gear replacement proposal** by the shop is refused by the customer or insurance company for financial reasons, an expert, or if this is not possible in foreign countries, the importer should be consulted (to be charged to the refusing party). If a decision is made against the above guidelines, it is recommended to file a note to this effect and have it signed by the expert.

Power steering gears with no visible outside damage that require replacement will be availabe on an exchange basis at a later date (status 9/93).

48 90 19 Removing and installing power steering gear

Removal

1. Separate universal joint (steering shaft) from steering gear. To do so, remove floorboard of pedal cluster. Undo clamping screw and push joint upwards.

Note

Fix or remove steering wheel in straight-ahead position of road wheels. If this requirement is not observed, the airbag contact unit must be brought into the center position after the steering gear has been fitted (p. 48-13).

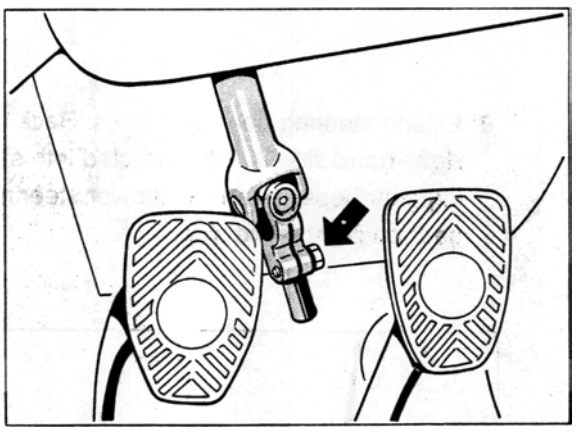

1736-48

2. Remove underside panel.

3. Press tie-rod ball joint off the steering arm. Use a suitable puller, e.g. Nexus 168-1 (no. 1), together with a 12 mm cap nut (no. 2 / Special Tool VW 267 a).

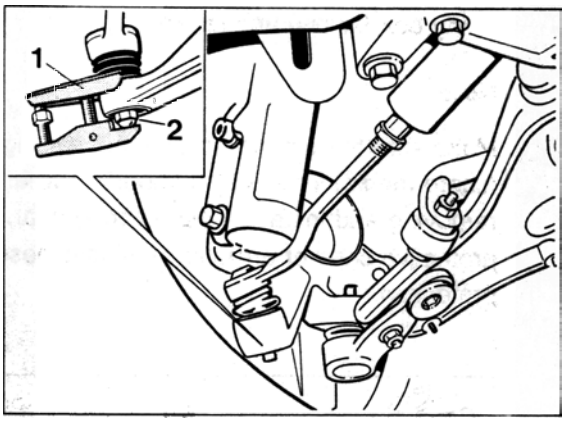

1703-40

Note

Start by turning tie-rod towards the front (arrow). Then angle off ball joint (ball pin) according to the Figure and extend it in this position.

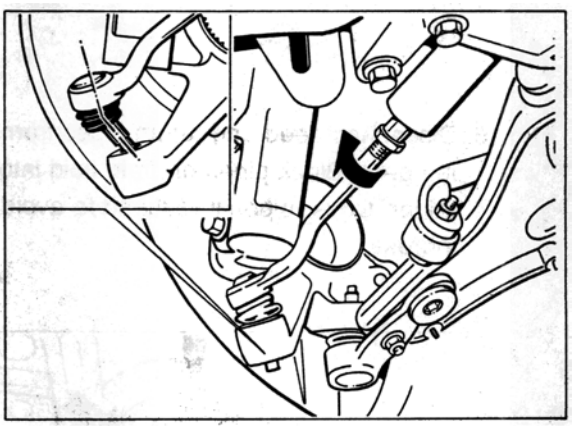

1704-40

4. Repeat operation on other side.

5. Undo right and left-hand tie rods from steering box (arrow) and remove tie rods.

Note

Make sure the steering rack is not damaged (score marks) This is also important when removing and installing the steering gear. Use protective caps or a rubber or plastic hose for protection.

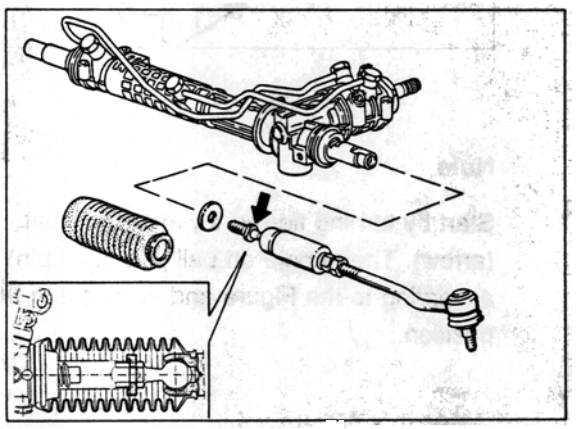

1737-4b

6. Disconnect feed and return pipes from steering gear. Block pipes or drain fluid into container. Cover pipes if required to avoid dirt ingress.

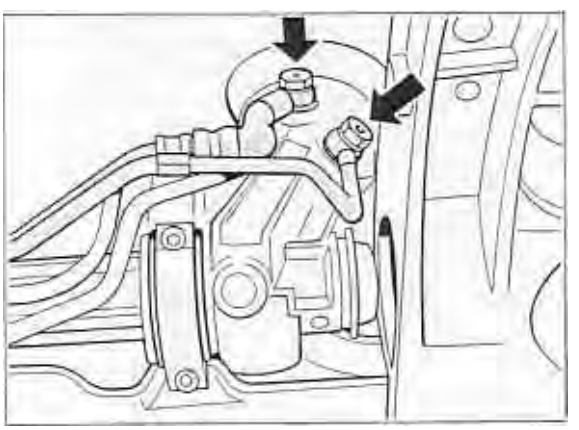

1738-48

7. Unclip power steering pipes from bracket in right-hand steering gear mount area.
Undo steering gear mounting bolts (arrows).

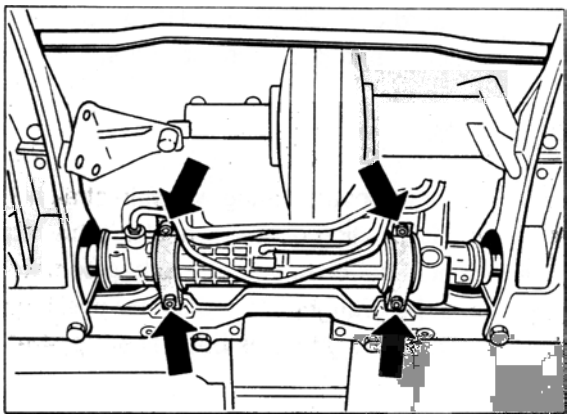

1739-48

8. Extend steering gear as follows: Rack on **right-hand** side is fully retracted into steering gear housing (arrow). Lower steering gear on **right-hand** side.

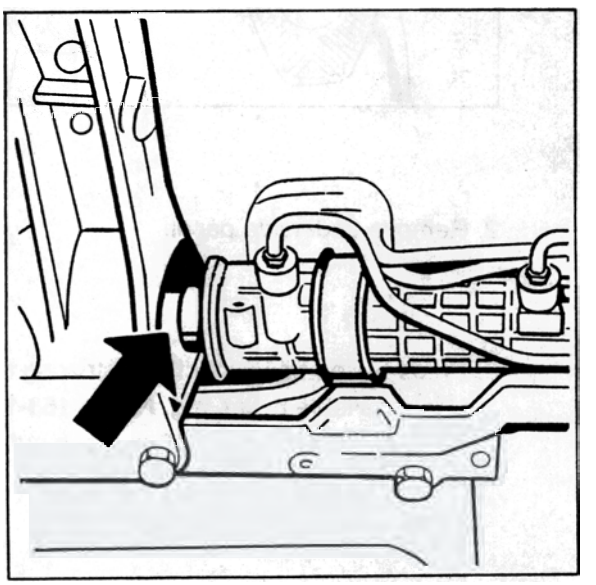

1740-48

9. Retract steering rack on **left-hand** side fully into steering gear housing (arrow), pulling or pushing (as required) on face of steering rack (take care not to damage the steering rack). Extend steering gear in rotary piston area and take out towards bottem.

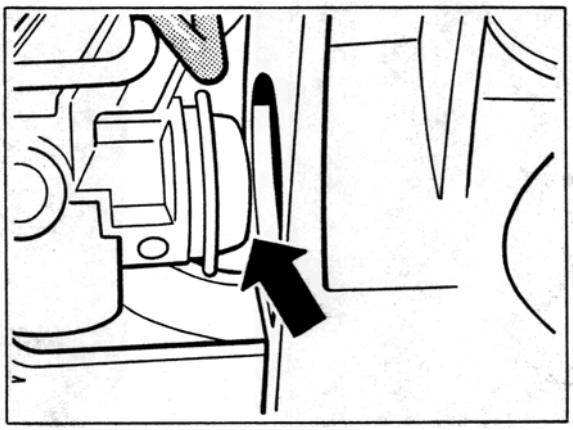

1092-48

Installation

Install in reverse order. Be sure to **observe** the following points:

Replace steering gear mounting bolts and dowel screw of the steering shaft with new parts after each removal operation.

The threads of the bores and the washers must be clean and fat-free. Remove micro-encapsulation residuals from the threaded bores required to fix the steering gear (use Aceton for cleaning, then blow out bores with compressed air).

Important: Since 1995, 12.9 screws have been used (previously 10.9 screws). The 12.9 screws must be used retroactively. **For replacement, use only 12.9 screws.**

Part numbers of 12.9 screws

Pan-head screw 8 x 60 = 999 218 102 09 (4 on vehicles without cross strut, 2 on vehicles with cross strut)

Pan-head screw 8 x 80 = 999 218 103 09 (2 on vehicles with cross strut)

Note

Observe the procedure for tightening the fastening screws for the steering gear strictly (see page 48-12).

Make sure that the steering rack is not damaged (score marks).

With the rack fully extended, coat steering rack with VW steering gear grease AOF 063 000 04.

When replacing the steering gear, assemble the rubber mounts and mounting clamps with Omnis 32 (DEA).

Push universal joint (steering shaft) into correct position - with steering wheel and steering box and airbag contact unit (spiral spring) in center position.
Steering gear mounting bolts should only be screwed on lightly (facilitats assembly).
Observe notes for slider and airbag contact unit (p. 48 - 13).

Tighten fastening screws of steering gear as follows:
First screw down the screws evenly until the fastening brackets almost touch the cross member. During final tightening, **start with the screws for the short leg of the cross member and pull them tight**, so these surfaces will be the first to fit tightly. Tightening torque: 45 Nm.

After having tightened the steering gear mounting bolts, assemble the tie-rods with the steering gear (fig. 1737-48, p. 48-10).

After having reconnected the pressure lines, fill steering hydraulics and bleed the steering gear (p. 48 - 3 / 48 - 4).

Tighten all nuts and bolts to the specified torque.

Check toe-in and adjust if required.

Printed in Germany - 16. 1996

Notes for slider and airbag contact unit

1. If the slider no. 1, has been pulled off the steering shaft no. 4, the roll pin no. 2 must face the tooth cutout (no. 3) when the components are reassembled.

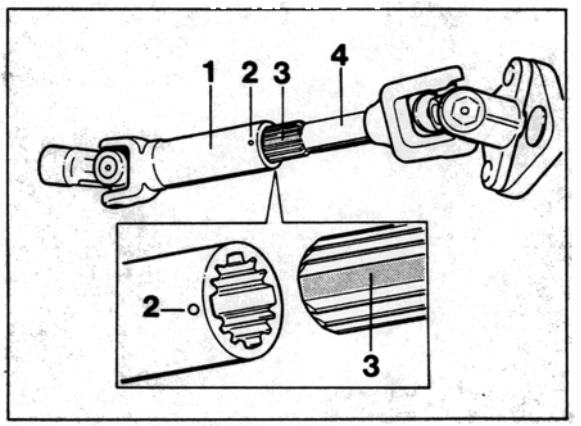

I396-48

2. If the steering wheel was **not located** in the specified position before the **steering** gear was removed, **the correct position of the contact unit** (wind-up spring) may no longer be present.
If this is the case, remove the steering wheel and set the contact unit to the center position.
If this requirement is not longer observed, the wind-up spring may be damaged.
Center position: Start by placing the contact unit in the end stop position. Starting from the end stop position, turn back contact unit by two turns and continue turning to the center position mark.
The exact center position is indicated by two arrows (No. 1).
Before fitting the steering wheel, set the road wheel in the straight-ahead position (with steering shaft fitted to steering gear).

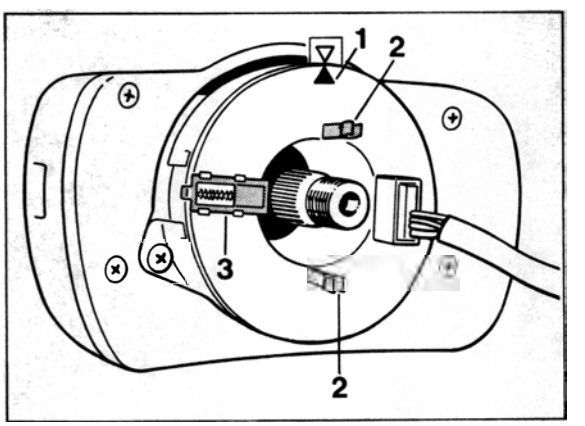

1741-48

1 = Center position mark (arrows)

2 = Drivers engaging into the steering wheel

3 = Lock (rotation lock) becoming effective afer removal of the steering wheel.

Repair Manual

911 Carrera 4
(993)

Volume IV:
Chassis

Dr. Ing. h.c. F. Porsche Aktiengesellschaft

IV Chassis

4 Chassis

4 Running gear overview of 911 Carrera 4 . . 4 - 101
4 Notes on repair descriptions . . . . . . 4 - 105
4 Checks / Notes on four-wheel drive . . . . 4 - 107

40 Front Wheel Suspension, Drive Shaft

40 41 19 Removing and installing front drive shaft . . . . . 40 - 101
40 Front drive shafts with centering . . . . . 40 - 105

46 Brake, Mechanical

46 Technical data . . . . . 46 - 101
46 Technical data Carrera 4S (break disc wear dimension) . . . . . 46 - 103

40 41 19 Removing and installing front drive shaft

Includes: checking drive shaft runout (constant velocity joint runout) in the case of drive shafts without centering. In the case of drive shafts with centering (see pages 40-105 and 40-106), it is not necessary to check the runout

Removal

1. Before lifting the vehicle, loosen connection of drive shaft to wheel.
   When doing so, also apply the brakes.

2. Remove front wheel and underside panel.

3. Disconnect brake cooling duct from control arm (1).
   Disconnect stabilizer mount from stabilizer (2).
   Loosen joint carrier (ball joint) from wheel carrier (3). When loosening the fastening nut, hold Torx screwdriver (special tool 9546) **against bolt.**
   Press off ball joint with puller (ball joint extractor) - special tool 9560.

Note

To prevent damage to rubber sleeve of ball joint, apply tire mounting paste to sleeve and extractor in area concerned. Then insert the extractor from the front.

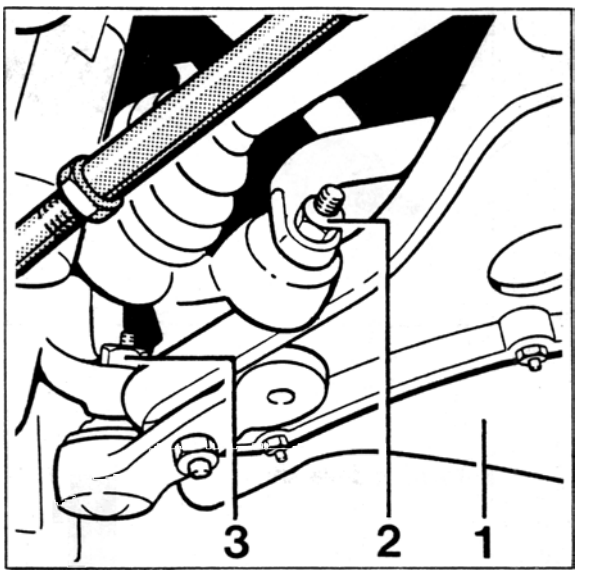

1093-40

4. Unscrew pan head screws of drive shaft from transmission flange.
   Take note of drawing on following page.

Note

The CV joint may fall apart if the dust cover holder (arrow) is removed or damaged.
The joint must therefore be protected against falling apart by 2 8 mm bolts and nuts during removal, installation and shipment.

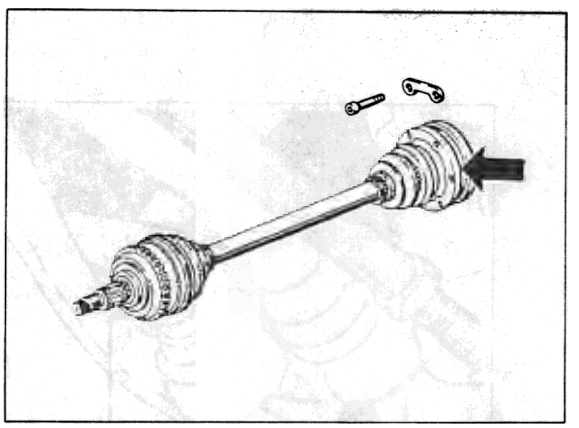

1094-40

5. Pull out drive shaft.

Note

As considerable force is needed to move the drive shaft in the teeth of the wheel hub, loosen the drive shaft using a copper drift.
With unfavorable tolerances, it may be necessary to push the drive shaft out of the hub using a wheel hub puller (e.g. a Klann or Schrem tool)

Installation

1. Grease the drive shaft teeth with Optimoly HT.

2. Insert pan head screws with washers in joint flange.
   Insert drive shaft and install pan head screws.
   Caution: before the pan head screws on the halfshaft flange are finally tightened, **the runout of drive shafts without centering must be checked (page 40-103).**
   In the case of drive shafts with centering (see pages 40-105 and 40-106), checking of the runout (item 3 on page 40-103) is not necessary.

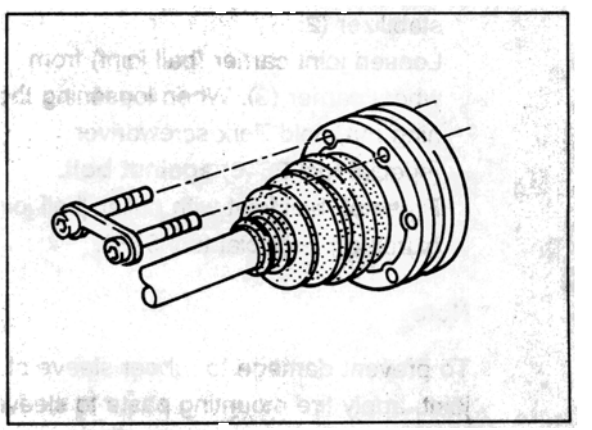

775-42

3. Proceed as follows to check **runout of drive shaft.**

   Attach dial gauge with holder (e.g. VW 387) to side member.

   Apply dial gauge to CV joint between the two steel covers, next to the die-stamped part no.
   Before making the measurement, remove any dirt or tectyl residue.

– Measure runout (turn wheel hub and read value off gauge).

   If the runout measured is **more than 0.2 mm,** loosen the screws slightly and center the joint.

   When the runout is acceptable **(0.2 mm maximum)**, tighten the pan head screws to 42 Nm, (31 ftlb.)..

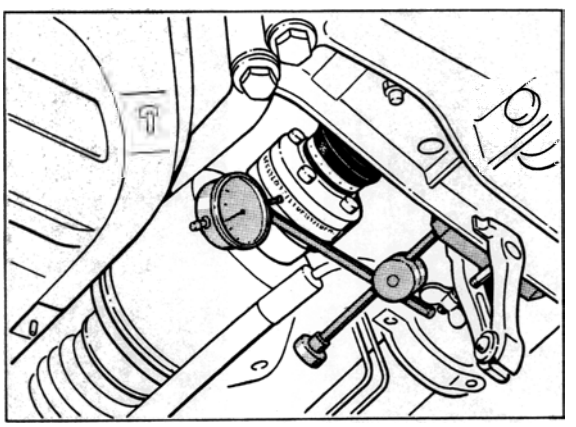

2061-40

4. Mount joint carrier (ball joint) on wheel carrier. The ball joint cone and the wheel carrier must be free from grease.
   Replace fastening nut (new part).
   When tightening fastening nut, hold special tool 9546 (Torx screwdriver) against bolt.

5. Assemble brake ventilation duct and stabilizer mount, using new fastening nuts.

6. **Tighten all screws and bolts to specified torque**.
   Install wheel and underside panel.

40 Front drive shafts with centering

Since June 9, 1995, four-wheel-drive vehicles (911 Carrera 4 and 911 Turbo) have been fitted with drive shafts (no. 1) which are centered in the halfshaft flange (no. 4) of the front axle final drive unit by their caps (no. 2).
It is therefore no longer necessary to check runout when installing drive shafts.
Precise introduction dates (and vehicle ident. nos.) are given in Technical Information, Group 4, No. 3/95.

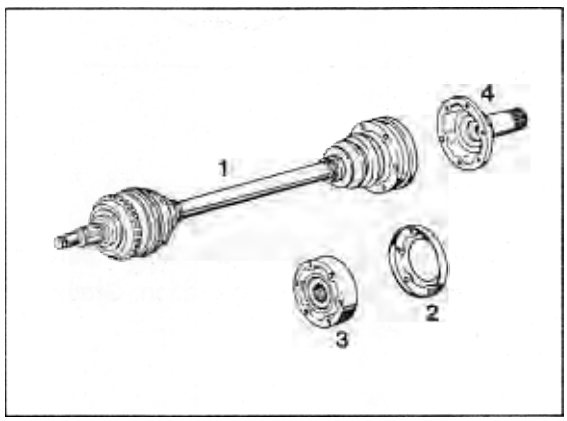

2274-42

Centering is by means of the cap (2) on the drive shaft (1) and the halfshaft flange (4), which is designed to fit the cap, on the final drive unit.

New (with centering - arrows)

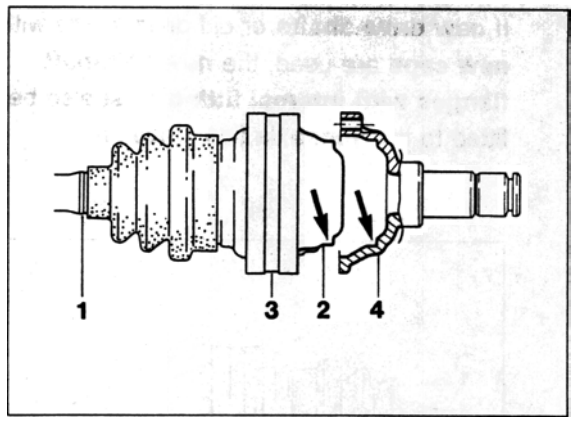

2275-42

Old (without centering)

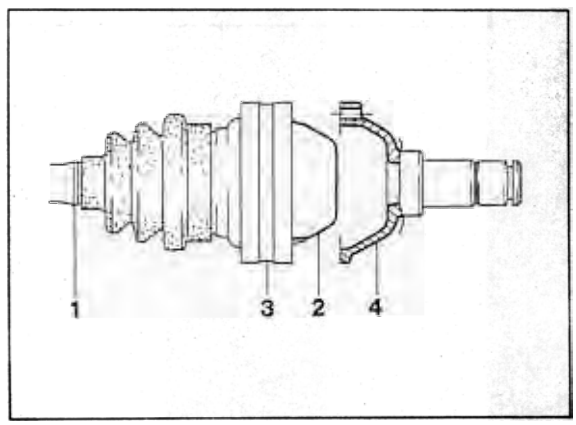

2276-42

For repairs where spare parts are needed and where the customer has complained of vibrations at 180 to 200 kph, only parts (drive shafts or caps and halfshaft flanges) **with centering** (arrows) must be used.
With these parts, the runout checks on the drive shafts described on page 40-103 are no longer required.

The **old** drive shafts without centering may be converted to centering by fitting the **new cap.**

If **new drive shafts** or old drive shafts with **new caps** are used, the **new halfshaft flanges with internal fitting** must also be fitted to the front axle final drive unit.

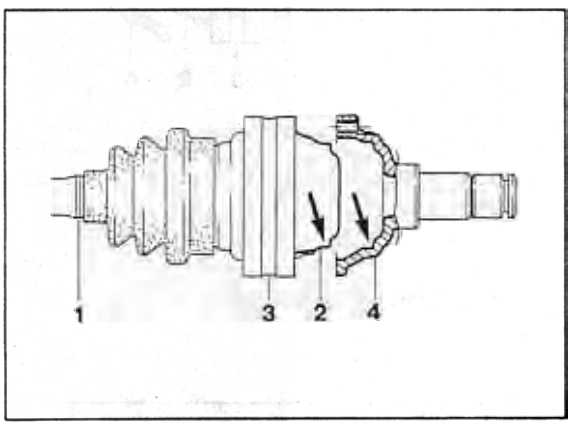

2275-42

Caution: When installing the cap, the sealing surface against the joint must be **sealed** using sealing gel (000.043.203.47) (arrow).
Important note: The sealing gel must also be used on the caps of the rear axle drive shafts.

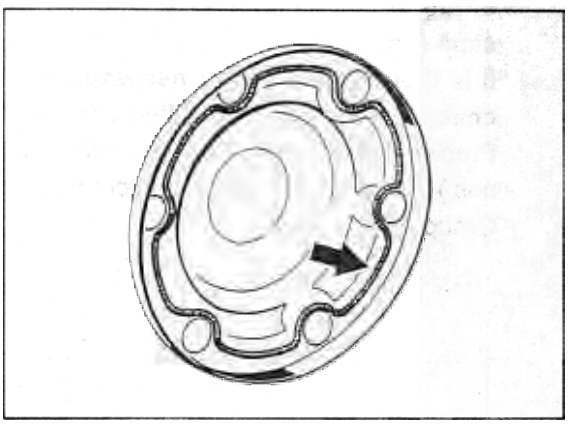

2277-42

Further information (allocation / part nos.) is given in Technical Information, Group 4, No. 3 / 95.

Technical data

Designation		Observations, dimensions 911 Carrera 4	Wear limit 911 Carrera 4
Operating brakes (foot brake)		Hydraulic dual-circuit brake system with front axle/rear axle circuit division. Hydraulic brake booster, internally vented and drilled brake discs with four-piston fixed calipers on front and rear axles. ABS / ABD fitted as standard.	
Brake booster		Hydraulic	
Boost factor		4.8	
Brake master cylinder	front dia.	25.4 mm	
	rear dia.	25.4 mm	
	stroke	17/15 mm	
Proportioning valve Switchover pressure reducing factor		45 bar - 0.46	
Brake disc diameter	front	304 mm	
	rear	299 mm	
Effective brake disc diameter	front	251 mm	
	rear	246 mm	
Piston diameter in caliper	front	2 x 44 + 2 x 36 mm	
	rear	2 x 30 + 2 x 28 mm	
Brake pad area	front	250 cm^2	
	rear	172 cm^2	
Total brake pad area		422 cm^2	
Pad thickness	front	approx. 11.0 mm	2 mm
	rear	approx. 12.0 mm	2 mm

Designation	Observations, dimensions 911 Carrera 4	Wear limit 911 Carrera 4
Thickness of new brake disc		
front	32 mm	
rear	24 mm	
Minimum brake disc thickness * after machining		
front	30.6 mm	30.0 mm
rear	22.6 mm	22.0 mm
Thickness tolerance of brake disc, max.	0.02 mm (new condition 0.01 mm)	
Lateral runout of brake disc, max.	0.05 mm	
Lateral runout of wheel hub, max.	0.04 mm	
Lateral runout of brake disc when fitted, max.	0.09 mm	
Surface roughness of brake disc after machining, max.	0.006 mm	
Pushrod play (measured at brake pedal plate)	approx. 8 mm	
Parking brakes (handbrake)	Drum brake, acting mechanically on both rear wheels	
Parking brake drum diameter	180 mm	181 mm
Brake shoe width	25 mm	
Brake lining thickness	4.5 mm	2 mm

* The brake disc must only be machined symmetrically, i.e. by an identical amount on both sides.

46 Technical data Carrera 4S (Turbo-Look)

Designation		Observations, dimensions	Wear limit
Operating brakes (foot brake)		Hydraulic dual-circuit brake system with front axle/rear axle circuit division. Hydraulic brake booster, internally vented and drilled brake discs with four-piston fixed calipers on front and rear axles. ABS / ABD* fitted as standard.	
Brake booster		Hydraulic	
Boost factor		4.8	
Brake master cylinder	front dia.	25.4 mm	
	rear dia.	25.4 mm	
	stroke	17/15 mm	
Proportioning valve (2 units) Switchover pressure reducing factor		40 bar - 0.46	
Brake disc diameter	front	322 mm	
	rear	322 mm	
Effective brake disc diameter	front	259.6 mm	
	rear	268.4 mm	
Piston diameter in caliper	front	2 x 44 + 2 x 36 mm	
	rear	2 x 30 + 2 x 28 mm	
Brake pad area	front	302 cm^2	
	rear	250 cm^2	
Total brake pad area		552 cm^2	
Pad thickness	front	approx. 11.0 mm	2 mm
	rear	approx. 11.0 mm	2 mm

* ABD = automatic brake differential

Printed in Germany - 12, 1995

Designation	Observations, dimensions	Wear limit
Thickness of new brake disc		
front	32 mm	
rear	28 mm	
Minimum brake disc thickness		
* after machining		
front	30.6 mm	30.0 mm
rear	26.6 mm	26.0 mm
Thickness tolerance of brake disc, max.	0.02 mm (new condition 0.01 mm)	
Lateral runout of brake disc, max.	0.05 mm	
Lateral runout of wheel hub, max.	0.04 mm	
Lateral runout of brake disc when fitted, max.	0.09 mm	
Surface roughness of brake disc after machining, max.	0.006 mm	
Pushrod play (measured at brake pedal plate)	approx. 8 mm	
Parking brakes (handbrake)	Drum brake, acting mechanically on both rear wheels	
Parking brake drum diameter	180 mm	181 mm
Brake shoe width	25 mm	
Brake lining thickness	4.5 mm	2 mm

The brake disc must only be machined symmetrically, i.e. by an identical amount on both sides.

4 Running gear overview of 911 Carrera 4

Just like the 911 Carrera (rear-wheel drive 993), the 911 Carrera 4 (four wheel drive 993) is offered with a variety of running gear versions (standard running gear / sports-type running gear M 030 for Coupé only / lowered running gear M 033). Components and running gear tuning of the 911 Carrera (993) and 911 Carrera 4 (993) differ only slightly from each other.

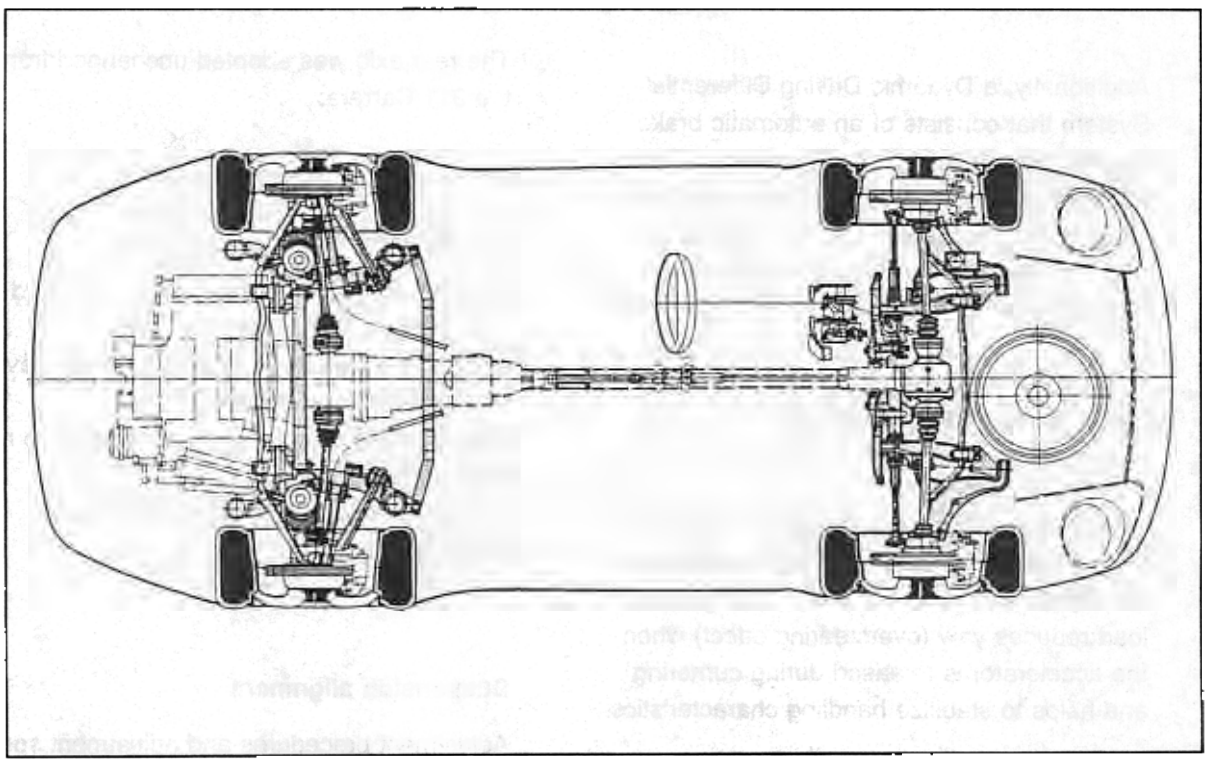

Four-wheel drive (General)

The 911 Carrera 4 is fitted with a permanent four-wheel drive system with **variable** power distribution to the front and rear wheels.

Power is distributed to the wheels across a viscous multi-disc clutch to reflect the wheel speed difference of the front and rear wheels. This ensures that the front wheels are given only enough drive torque to ensure optimum propulsion even under adverse road conditions.

The front wheels are driven by the viscous multi-disc clutch and a central shaft to the front-axle final drive.
The viscous multi-disc clutch is housed in the front transmission housing of the six-speed manual transmission. The design of the six-speed manual transmission is based on the 911 Carrera (993) version.

Additionally, a Dynamic Driving Differential System that consists of an automatic brake operation feature (ABD) and a load-dependent (mechanical) transverse lock differential provides improved traction and driving stability.
The limited-slip differential provides different locking values for acceleration and under load:

Locking value during acceleration 25%
Locking value under load 40%

The lower locking value during acceleration considerably improves cornering characteristics. An increased locking value for driving under load reduces yaw (oversteering effect) when the accelerator is released during cornering and helps to stabilize handling characteristics.

Note

For a detailed description, please refer to Service Information Technik '95. Order No. WKD 499 520 (**2** = English).

Front axle

The design of the front axle is identical to that of the 911 Carrera.

To provide sufficient space for the drive shafts, the stabilizer mount is now shaped as an angled drop forging.

Rear axle

The rear axle was adopted unchanged from the 911 Carrera.

Wheels, tires

The 911 Carrera 4 is supplied as standard with 16-inch or (optionally, M No.)
with 17-inch wheels in "Cup 93" design (availability as per September, 1994).
The "Carrera 4" script is embossed in the hubcaps.
Tire pressures: same as on 911 Carrera (page 44 - 1).

Suspension alignment

Adjustment procedures and adjustment specifications of front and rear axles are the same as on the 911 Carrera (as of page 44 - 3).

Brakes - General information

The 911 Carrera 4 is fitted with a dual-circuit brake system (front/rear axle division) **with hydraulic brake booster**. ABS and the dynamic lock system **(consisting of ABD and limited-slip differential)** are supplied as standard.

Front brakes

The front brakes were adopted from the 911 Carrera (drilled brake disc, four-piston light-alloy brake calipers).
The brake pad grade is the same as for the 911 Carrera (modified as of MY '95 / please refer to spare parts catalog). Both sides of the brake pads are monitored for wear by brake pad wear indicators.
The brake caliper is painted in a **titanium color**.

Rear wheel brakes

The rear brakes are fitted with the drilled brake disc adopted from the 911 Carrera. The four-piston light-alloy caliper is fitted with pistons with a diameter of 28 mm and 30 mm (911 Carrera dias. are 30 mm and 34 mm, respectively).
The brake pad grade is the same as on the 911 Carrera (modified as of MY '95 / please refer to spare parts catalog). Both sides of the brake pads are monitored for wear by brake pad wear indicators.
The brake caliper is painted in a **titanium color**.

Proportioning valve

Two proportioning valves (for left and right-hand side brakes) are fitted to reduce the braking pressure at the rear axle and to adapt the braking pressure to the wheel load distribution.
Switchover pressure: 45 bar
Reducing factor 0.46
(Identification: 5 ↓ 45).

Brake boost / hydraulic pump

The electro-hydraulic brake booster system known from the 911 Carrera 4 (Model Year '89) is used to provide a brake boost effect.
To optimize the system, a modified **hydraulic pump** is fitted.
This pump may also be retrofitted to the 911 Carrera 4 as of Model Year '89.

Note

The hydraulic pump relay is no longer located in the Central Electrical System (as in the case of the 911 Carrera 4 as of Model Year '89) but rather in the right-hand front end of the luggage compartment (refer to the below paragraph on relays).

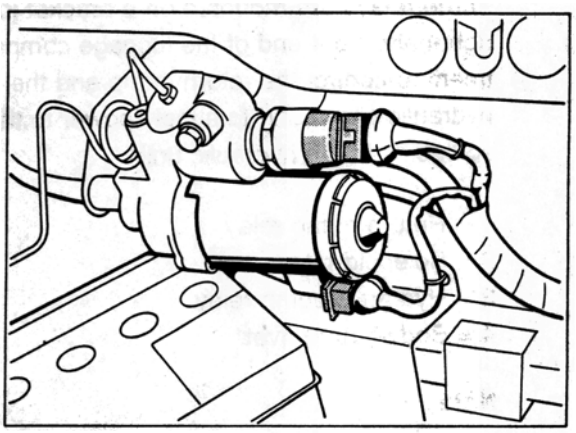

2000-47

ABS / ABD hydraulic unit

The 911 Carrera 4 is fitted with the optimized ABS/ABD hydraulic unit that had already been fitted to 911 Carrera vehicles with ABS/ABD system in March 1994 (refer to Technical Information 3/94 of May 27, 1994). The ABS/ABD control unit (993.618.127.00) was adapted to the modified hydraulic unit and the four-wheel drive system. This control unit is also used on the 911 Carrera (rear-wheel drive) with ABD - as of MY '95.
To help identification, a sticker with a **red outline** is attached to the control unit.

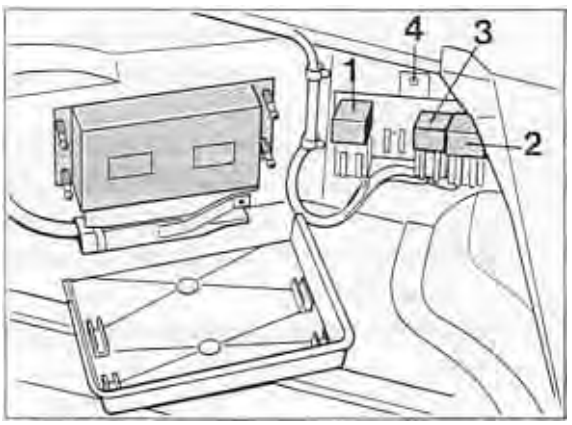

1773C-47

Relays

Three relays are mounted on a bracket in the right-hand front end of the luggage compartment to control the return pump and the hydraulic pump and to supply power to the solenoids in the hydraulic unit.

1 = Return pump relay
2 = Solenoid relay
3 = Hydraulic pump relay
4 = Body-bound rivet

Note

To remove the cover from the relay bracket, push out the pin in the body-bound rivet and remove the complete bracket assembly. The pin may be retrieved from behind the bracket plate by applying compressed air.

Steering system

The steering system was retained from the 911 Carrera without any changes.

4 Notes on repair descriptions

General information

The 911 Carrera (rear-wheel drive 993) forms the basis of the description of repair, assembly and adjustment operations.
This means that the "911 Carrera 4" Repair Manual (filed after the separation sheet) covers **only operations that affect the 911 Carrera 4**.

Notes on tightening torques

Most tightening torques of the 911 Carrera and 911 Carrera 4 are identical.
Differing or additional tightening torques are included in the tables in the corresponding repair groups of the 911 Carrera (rear-wheel drive 993).

Notes on suspension alignment (Repair Group 44)

The adjustment operations and specifications for front and rear axles are the same as for the 911 Carrera (rear-wheel drive 993).

Notes on brake boosting (Repair Group 47)

The hydraulic brake booster system is also described in the manuals on the 911 Carrera (rear-wheel drive 993).

4 Checks / Notes on four-wheel drive

Balancing the wheels on the vehicle

All four wheels must be off the ground and able to spin freely when the wheels are precision balanced on the vehicle.

Performance tests

Performance tests must only be run on 4-roller dynamometers with rpm coupling. When running tests on 2-roller dynamometers, interrupt the connection between front and rear axle at the central shaft.

Brake tests

Brake tests must only be run on roller dynamometers or plate dynamometers.
If no four-wheel drive brake dynamometer (roller dynamometer) is available, make sure the below limits are not exceeded on conventional roller dynamometers:

Test speed	5 mph
Test duration	20 seconds

Towing

If the vehicle has to be towed with the front or rear axle off the ground, the wheels of the raised axle must be able to rotate freely.

Repair Manual

911 Carrera
(993)

Volume V:
Body

Dr. Ing. h.c. F. Porsche Aktiengesellschaft

Volume I:	**Overall vehicle – General**	**0**
General	Maintenance, diagnosis	03
Engine		
	Engine	**1**
	Engine – Crankcase, mounting	10
	Engine – Crankshaft, pistons	13
	Engine – Cylinder head, valve drive	15
	Engine – Lubrication	17
	Engine – Cooling	19
	Fuel, exhaust system, engine electrical system	**2**
	Fuel supply, control	20
	Exhaust system – Turbocharging	21
	Fuel system, electronic injection	24
	Fuel system, K-Jetronic	25
	Exhaust system	26
	Starter, power supply, GRA	27
	Ignition system	28
Volume II:	**Transmission**	**3**
Transmission	Clutch, control	30
Manual transmission	Manual transmission – Controls, case	34
	Manual transmission – Gears, shafts, inner operation	35
	Final drive, differential, differential lock	39
Volume III:	**Transmission**	**3**
Transmission	Automatic transmission – Torque converter	32
Automatic	Automatic transmission – Controls, case	37
transmission	Automatic transmission – Gears, control	38
	Final drive, differential, differential lock	39
Volume IV:	**Chassis**	**4**
Chassis	Front wheel suspension, drive shaft	40
	Rear wheel suspension, drive shaft	42
	Wheels, tires, alignment	44
	Anti-Lock System (ABS)	45
	Brakes – Mechanical	46
	Brakes – Hydraulics, regulator, booster	47
	Steering	48

Volume V:	**Body**	**5**
Body	Body front section	50
	Body center section, roof, frame	51
	Body rear section	53
	Hoods, lids	55
	Front doors, Central Locking System	57
	Exterior body equipment	**6**
	Sunroof	60
	Soft top, hardtop	61
	Bumpers	63
	Glasses, window control	64
	Exterior equipment	66
	Interior equipment, passenger protection	68
	Interior body equipment	**7**
	Trim, insulation	70
	Seat frames	72
	Seat upholstery, covers	74
Volume VI:	**Air conditioning**	**8**
Air conditioning	Heater	80
Vehicle electrics	Ventilation	85
	Air conditioning	87
	Auxiliary air conditioning system	88
	Electrical system	**9**
	Instruments, alarm	90
	Radio, telephone, on-board computer	91
	Windshield wipers and washer	92
	Exterior lights, lamps, switches	94
	Interior lights, lamps, switches	96
Volume VII:	**Electrical system**	**9**
Wiring diagrams	Wiring	97
Volume VIII:	**Diagnosis**	**D**
Diagnosis	Self-diagnosis	03
	DME Diagnosis	24
	Tiptronic Diagnosis	37
	PDAS Diagnosis	39
	ABS Diagnosis	45
	Airbag Diagnosis	68
	Heater Diagnosis	80
	Alarm Diagnosis	90

Preface

Structure

The "Technical Literture" for the "911 Carrera (993)" model is basically structured as before, i.e. the structure follows the familiar repair groups.

A new feature is that the structure includes the main groups **0 to 9** and the main group **D**.

Main groups:	0	Complete vehicle – General
		Engine
	2	Fuel, exhaust, engine electrical system
	3	Transmission
	4	Chassis
	5	Body
	6	Body equipment, outside
	7	Body equipment, interior
	8	Air conditioning
	9	Electrical system
	D	Diagnosis

Layout

The layout in the below items remains unchanged throughout the repair manual

1. Table of tightening torques
2. Special tools required
3. Exploded views
4. Legends for the exploded views
5. Assembly notes / use of special tools

As a new feature, however, the former item 6 (Repair group diagnosis) is no longer filed in the volume corresponding to the respective repair group. The **Diagnosis test plans / diagnosis procedures** have been combined in a **separate Diagnosis volume** broken down according to the main groups 0 to 9.

Another new feature is that the contents of the "Service Information Technik" are indicated in the Repair Manual. This brochure concentrates on a description of the design and function of components and of the new features introduced for a particular model year.

Service Number

All major repair procedures and repair descriptions are identified by a two- or four-digit **Service Number** completed by two additional digits to identify the work that corresponds to the first six digits of the working position number in the Working Times and Damage Catalog.

Example: 30 37 37 Dismantling and assembling clutch control shaft

Explanation: **30** **37** **37** 50 (full working position number)

Repair group
here: Clutch, control

Component designation
here: Clutch control shaft

Activity
here: Dismantling and assembling

Index
here: Removed

Presentation in the various documents

30 37 37 50	Working position no. from **Working Times and Damage Catalog**, consisting of repair group, component designation, activity and index
30 37 37	Six-digit number in **Repair Manual**, consisting of repair group, component designation and activity
30 37	Service number in **Service Information**, consisting of repair group and component designation

Goal

The introduction of a service number in the "technical literature" is intended to facilitate standardization and positive identification to allow direct cross-referencing among the various documents. This is of particular importance with regard to the use of electronic media.

Survey of contents of Service Information Technik '95

The Service Information gives a detailed description of the technical features of the new 911 Carrera.

	Rep. Gr.	Page
Engine		
General		1 - 1
Engine cross-sections	10	1 - 4
Full-load curve		1 - 6
Belt pulley	13	1 - 8
Pistons	13	1 - 10
Hydraulic valve lash adjuster	15	1 - 16
Setting the timing	15	1 - 18
USA - auxiliary air pump		1 - 19
Fuel and ignition systems		
General		2 - 1
DME - Schematic	24	2 - 2
Fuel - air flow	24	2 - 3
Exhaust gas flow	26	2 - 5
DME control unit 2.10.1	24	2 - 9
Mass air flow sensor	24	2 - 12
Throttle potentiometer	24	2 - 18
Ignition system	28	2 - 24
Plausibility test		2 - 28
Diagnosis		2 - 29
Auxiliary air pump	26	2 - 33
Power transmission		
Transmission	30	3 - 1
Clutch	30	3 - 2
Manual transmission	34	3 - 3
Transmission ratios		3 - 6
Gear set	35	3 - 8
Synchromesh	35	3 - 9
Final drive	39	3 - 13
Oil supply		3 - 15
Porsche Tiptronic	37	3 - 16
Modifications for the '95 model year		3 - 17

	Rep. Gr.	Page
Running gear		
General		4 - 1
Front axle	40	4 - 2
Steering	48	4 - 7
Rear axle	42	4 - 8
Elasto-kinematic toe correction	42	4 - 12
Coil springs (layout)	42	4 - 13
Wheels, tires	44	4 - 15
Suspension alignment	44	4 - 17
Brakes	47	4 - 20
Bleeding the brakes	47	4 - 23
ABS 5	45	4 - 24
Operation of the ABD	45	4 - 30
Diagnosis ABS/ABD	45	4 - 34
Body		
General		5 - 1
Constructional dimensions	50	5 - 4
Aerodynamics and air ducting	50	5 - 8
Body equipment		
Body equipment		6 - 1
Color scheme as of 1995 model year	60	6 - 1
Windows	64	6 - 8
Airbag system	68	6 - 14
Body - interior trim		
Body - interior trim	70	7 - 1
Seats	72	7 - 5
Heating, air conditioning, ventilation		
Particle filter	85	8 - 1
Air ducting	80	8 - 3
Heating - air conditioning unit	85	8 - 5
Heating - air conditioning unit	87	8 - 6
Series resistor of rear blower	80	8 - 9

Electrical system

	Rep. Gr.	Page
Instruments	90	9 - 1
Alarm system/central locking system	90	9 - 3
Heated rear window	64	9 - 6
Central Information System (Z I)	91	9 - 7
Radio "Alpine 7807"	91	9 - 10
Sound package, DSP-System	91	
Windshield wiper and washer system	92	
Headlights	94	
Front end light cluster	94	
Tail lights	94	
Engine compartment baseplate	97	
Wiring diagram		

Summary

Maintenance	0 - 1
Number ranges	0 - 4
Technical data	0 - 5

68 64 19	Removing and installing driver airbag unit	. 68 - 15
68 66 19	Removing and installing contact unit	. 68 - 16
68 63 19	Removing and installing airbag triggering unit . . .	. 68 - 17
68 68 19	Removing and installing passenger airbag unit . .	. 68 - 18
68	Checking operational readiness of airbag system .	. 68 - 20
68 47 19	Removing and installing Cabriolet draft stop	. 68 - 21
68 27 13	Bonding interior rearview mirror in place	. 68 - 27
68 27 19	Removing and installing inside rear view mirror . .	. 68 - 31

7 Interior Body Equipment

72 Seat frames

72 81 19	Removing and installing seat lift units . .	72 1

74 Seat Upholstery, Covers

74 28 01	Checking seat heater	. 74 - 1
74 27 15	Calibrating controllable seat holder	. 74 - 3

Printed in Germany - 19, 1996

V Body

The **Repair Manual for the 911 Carrera (993)**, Vol. 5, also includes the Repair Manual for the **911 Carrera 4 (993 4WD)** and the 911 Targa (993). The 911 Carrera (993) forms the basis for the description of repair work in the Manual an "911 Carrera (993)" appears at the top of each page.

Where different or additional repair procedures apply to the 911 Carrera 4, these are given following the repair instructions for the 911 Carrera. The repair descriptions for the two models are separated by a title page. **"911 Carrera 4"** appears at the top of each page after the title page (divider). In addition, **the page numbering starts with 100**.

Where different or additional repair procedures apply to the 911 Carrera (993), these are given following the repair instructions for the 911 Carrera or 911 Carrera 4. The repair instructions for the 911 Targa (993) are separated by a title page. "911 Targa (993)" appears at the top of each page after the title page (divider). In addition, **the page numbering starts with 200.**

5 Body

5	Safety notes	5 - 1
5	Special tools and sheetmetal tools for body repairs	5 - 3
5	Repair check dimensions	5 - 7
5	Body parts of stronger sheet steel	5 - 13
5	Dimensions for Cabriolet	5 - 15

50 Body - Front Section

50 56 19	Removing and installing wheel housing liner	50 - 1
50 10 55	Replacing closing panel	50 - 5
50 74 55	Replacing wheel housing	50 - 11
50 53 55	Replacing fender connection panel	50 - 17
50 74 56	Replacing wheel housings	50 - 21
50 95 55	Replacing front end	50 - 27

51 Body - Center Section, Roof, Frame

51 90 19	Removing and installing underbody paneling	51 - 1
51 45 55	Replacing outer side member	51 - 5
51 48 55	Replacing center side member	51 - 11
51 73 55	Replacing floorpan	51 - 19
51 03 55	Replacing part of roof panel	51 - 31
51 03 35	Replacing the complete roof	51 - 37

Printed in Germany - 19, 1996

53	**Body - Rear Section**	
53 69 19	Removing and installing wheel housing liner	53 - 1
53 55 55	Replacing side section - Cabriolet	53 - 4a
53 55 55	Partly renewing side panel	53 - 5
53 68 56	Partly renewing rear section of body	53 - 11
53 47 55	Replacing side member w. cross member, rear wheel housing & side panel	53 - 17
53 02 49	Reworking rear bodywork - Cabriolet	53 - 35
6	**Body Equipment, Exterior**	
6	Body paint colors	6 - 01
61	**Convertible Top, Hardtop**	
61 01 19	Removing and installing convertible top	61 - 1
61 28 55	Replacing convertible top fabric and roof liner	61 - 7
63	**Bumpers**	
63 15 19	Removing and installing front spoiler	63 - 1
63 55 19	Removing and installing tail panels	63 - 7
64	**Glasses, Window Control**	
64 12 19	Removing and installing the windshield	64 - 1
64 12 51	Sealing the windshield	64 - 9
64 75 19	Removing and installing side window	64 - 11
64 86 19	Removing and installing rear window	64 - 15
64 86 51	Sealing the rear window	64 - 23
64 85 19	Removing and installing flexible rear window of Cabriolet	64 - 25
66	**Exterior Equipment**	
66 58 19	Removing and installing rear spoiler	66 - 1
66 58 55	Replacing rear spoiler	66 - 8a
66 31 19	Removing and installing the sill cover	66 - 9
66 38 19	Removing and installing roof cover	66 - 13
66 40 23	Installing support for auxiliary stop light	66 - 17
66 38 13	Fastening roof cover	66 - 23
68	**Interior Equipment**	
68 27 13	Bonding interior rearview mirror into place	68 - 1
68 75 02	Checking the seat belts	68 - 5
68	Safety precautions for working on cars with airbag	68 - 7
68 68	Disposal of airbag units	68 - 9

Safety notes

Observe the following safety notes when performing body repairs:

Removal of components may change the gravity center of the vehicle.
The vehicle may therefore have to be tied down by additional measures on the lifting platform.

Do not store other vehicles without additional protection in rooms used for body repairs (risk of fire damage due to sparks, damage to battery, paint and body glass).

Be extremely careful when grinding or welding in the vicinity of the fuel tank and other parts of the fuel system. If necessary, remove all components affected.

Do not weld, braze or solder any parts of the filled air conditioning system. This also applies to welding, brazing or soldering operations on the vehicle that may cause components of the air conditioning system to heat up.

When drying the vehicle following a respray, do not expose the vehicle to temperatures of max. 80°C for more than 2 hours.

To protect **electronic control units** against **excessive voltage** when using **electric welding equipment**, observe the following safety measures:

Disconnect cable from negative battery terminal and cover negative battery terminal.

Connect ground clamp of electric welding equipment directly and as closely as possible to the component to be welded. Make sure no electrically insulated parts are located between the ground clamp and the welding location.

Do not touch electric control units and electric lines with the ground clamp or with the welding electrode.

Safety precautions for **operations involving naked flames or spark generation** (welding, grinding) in the vicinity of the **battery** or near the location of the **battery vent hose**:

Remove battery and store it in a safe place.

Blow through vent hose using compressed air. Plug hose ends.
(The vent hose is routed into the left-hand wheel houing via an elbow fitting at the front above the battery)

Handling of electronic control units after accident repairs

Replacement of electronic components after an accident is required if at least one of the following conditions is present :

The housing is visibly deformed or damaged.

The support surface or console is deformed (no outward signs of damage to the unit).

The plug connection is damaged or corroded due to moisture.

The functional check or self-diagnosis of the unit displays the following fault:
"Control unit faulty".

If electronic components, e.g. the ABS control unit, have been removed when repairs are carried out and if they are to be reused afterwards, the operation of the components must be checked after reinstallation according to the respective specifications.

Special tools and sheetmetal tools for body repairs

Special tools:

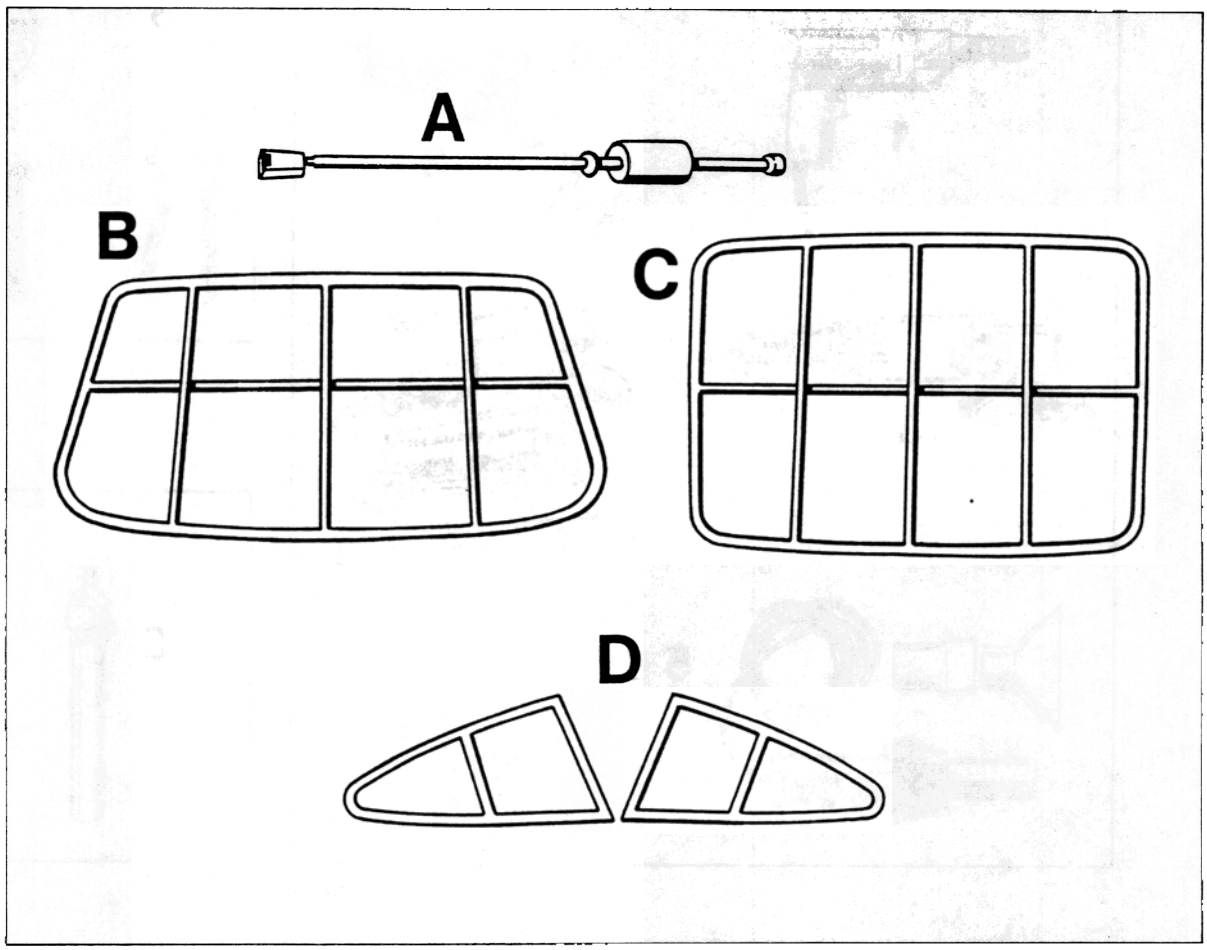

A = P 290 (Special Tool for removal and installation of door hinge pins)

B = P 852 (Windshield gauge)

C = P 853 (Rear window gauge)

D = P 854 (Gauges for right and left side windows)

Sheetmetal tools (standard):

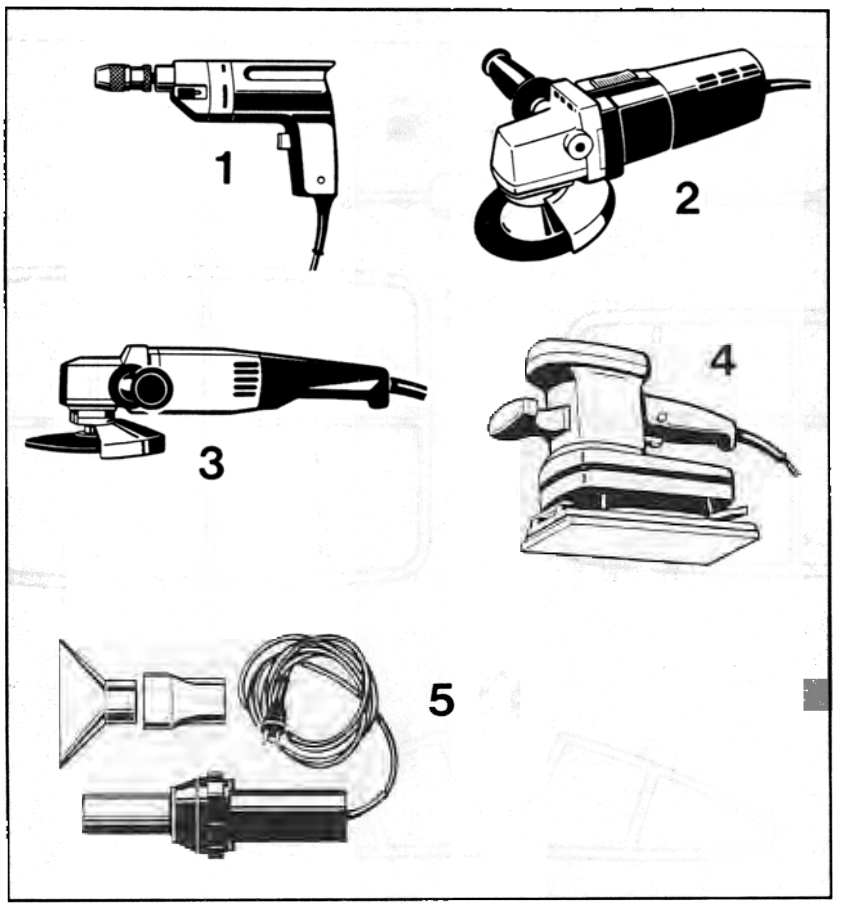

238 - 50

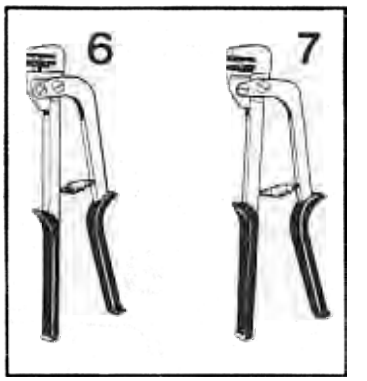

236 - 50

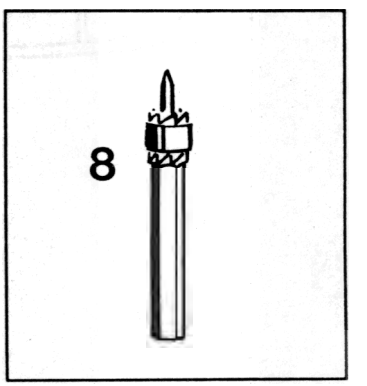

308 - 50

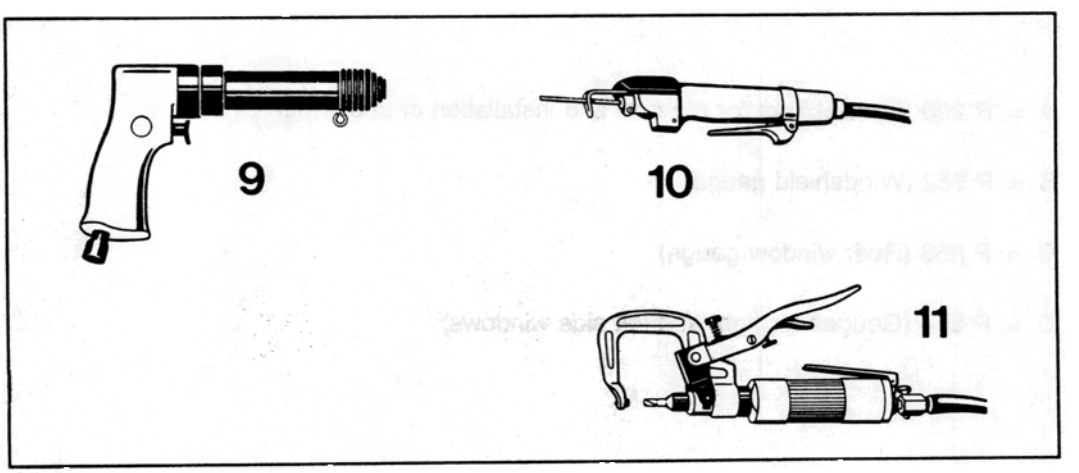

235 - 50

Sheetmetal tools (standard):

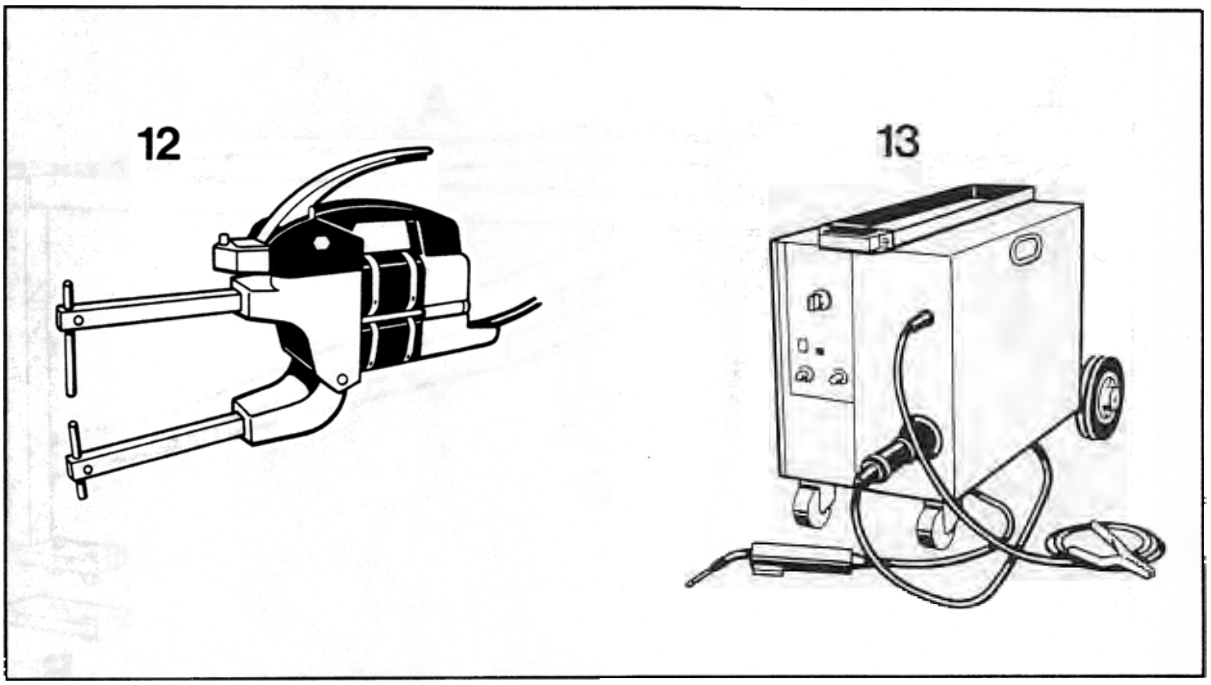

Electrical power tools:

1 = Power drill
2 = Angle grinder, large
3 = Angle grinder, small
4 = Grinding tool
5 = Hot-air gun

Mechanical power tools:

6 = Hole cutter
7 = Edge setter

Accesories:

8 = Spotweld cutter (for power drill)

Air tools:

9 = Air chisel
10 = Body saw
11 = Spotweld cutter

Welders:

12 = Spotwelder
13 = MIG welder

Special tools for repair work on Cabriolet

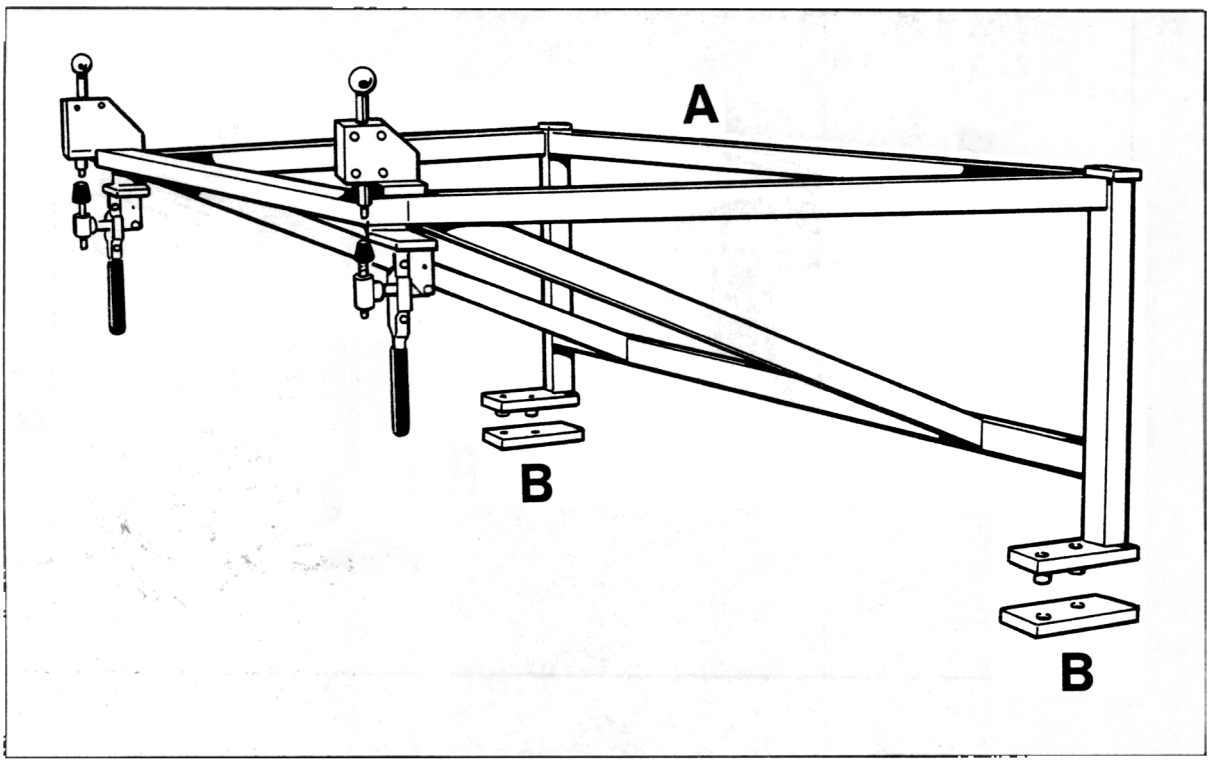

A = P 9212 (test gauge for convertible top mounting points)

B = P 9212/1 (adapter plates)*

* Adapter plates must be inserted between P 9212 and the convertible top mounts on the B-pillars.

Dimensions for floor assembly

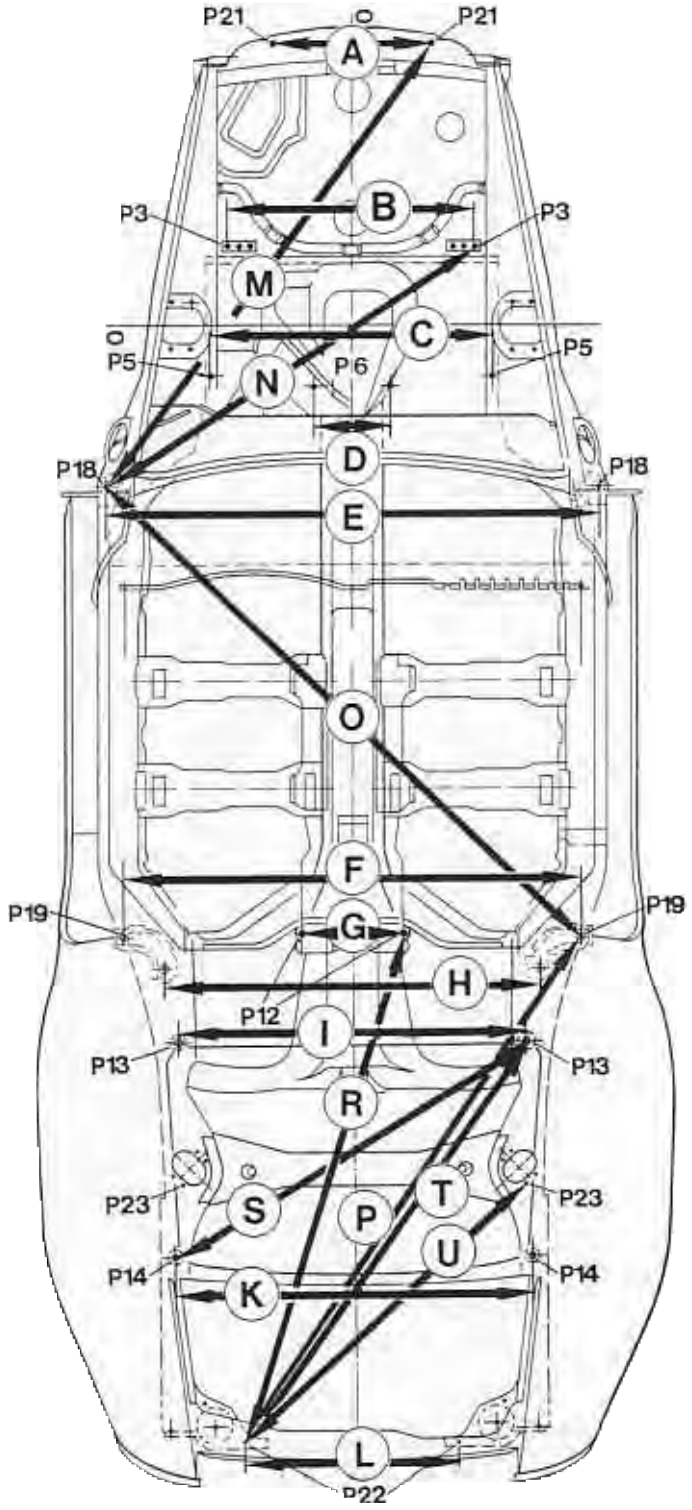

Dimensions for floor assembly

Dim.	Point	Designation	mm
A	P 21	Bottom front closing section, take-up hole	440 ± 2
B	P 3	FA side member, bolt hole	670 ± 0,5
C	P 5	FA outer crossmember, holt hole	770 ± 2
D	P 6	FA inner crossmember, bolt hole	204 ± 2
E	P 18	Platform/jacking point front, take-up hole	1330 ± 1
F	P 19	Jacking point rear, take-up hole	1236 ± 1
G	P 12	Transmission support, bolt hole	278 ± 1
H	P 20	Platform rear, take-up hole	1018 ± 1
I	P 13	Subframe, bolt hole	935 ± 1,5
K	P 14	Subframe rear, bolt hole	973 ± 1,5
L	P 22	Inner engine mount, take-up hole	640 ± 1
M	P 21 – P 18		1500 ± 3
N	P 3 – P 18		1199 ± 3 (1195 ± 3)
O	P 18 – P 19		1788 ± 3)
P	P 19 – P 22		1689 ± 3 (1654 ± 3)
R	P 12 – P 22		1447 ± 3 (1414 ± 3)
S	P 13 – P 14		1143 ± 3 (1122 ± 3)
T	P 13 – P 22		1372 ± 3 (1344 ± 3)
U	P 23 – P 22		1043 ± 3 (1039 ± 3)

Note

All dimensions are measured from and to the center of hole or bolt hole.
The dimensions are measured directly and are therefore oblique dimensions.
The dimensions in brackets are measured horizontally.

FA = Front axle

RA = Rear axle

Printed in Germany – IV, 1994

Dimensions for body

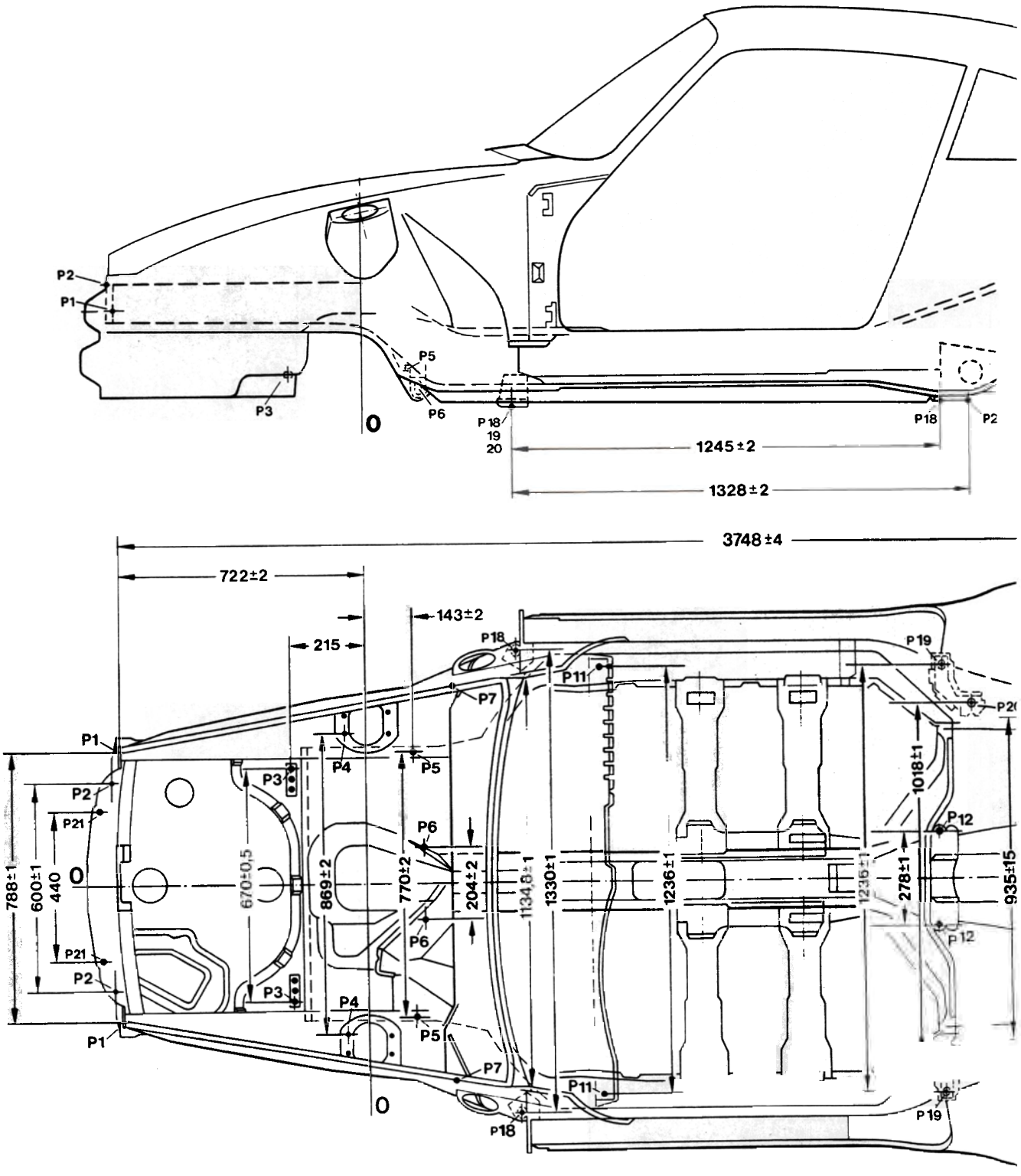

Printed in Germany - 19, 1996

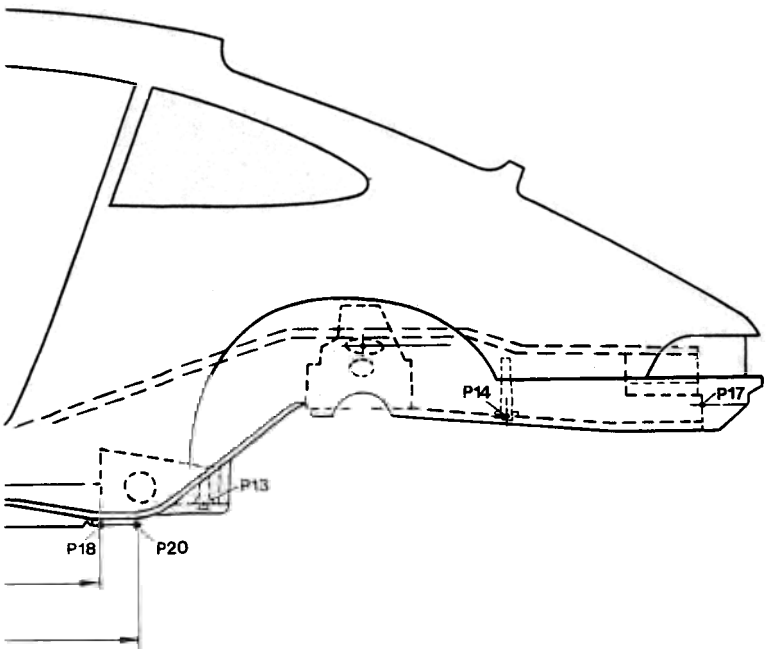

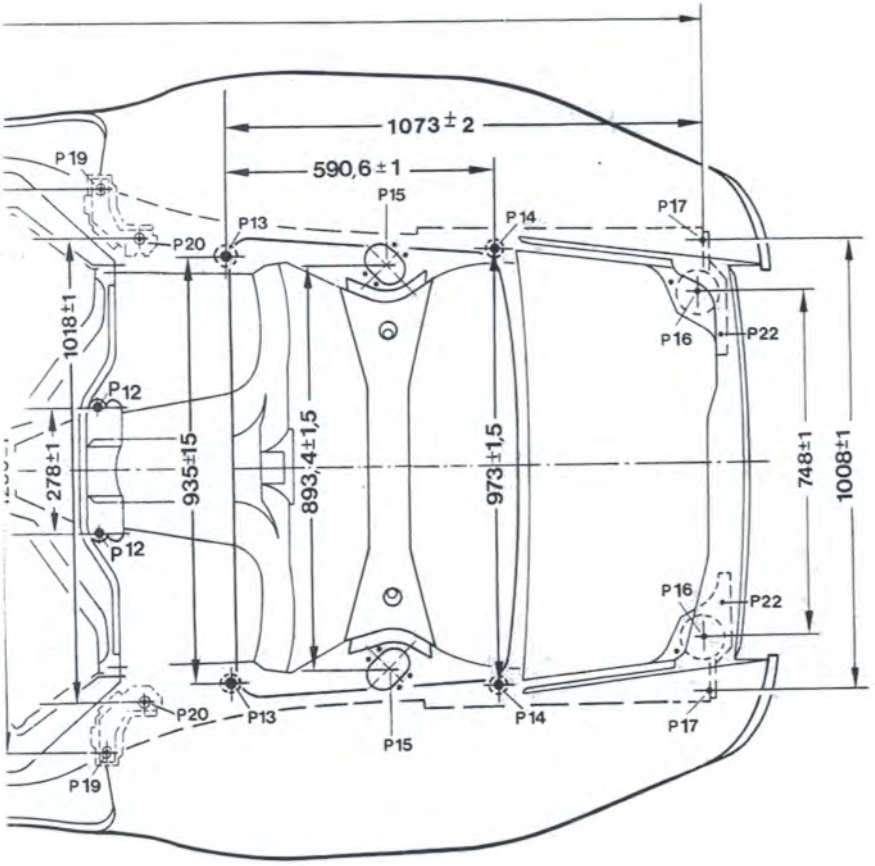

Point LH/RH	Designation
1	Impact absorber / pipe front, bolt hole (M 8 thread)
2	Front upper closing section, take-up hole
3	FA side member, bolt hole (12 x 1.5 thread)
4	FA strut mount, take-up hole
5	Outer FA crossmember, bolt hole (M 12 x 1.5 threads)
6	Inner FA crossmember, bolt hole (M 10 thread)
7	Wheel arch, take-up hole
11	Instrument panel, take-up hole
12	Transmission mount, bolt hole (M10 thread)
13	Subframe front, bolt hole (M 12 x 1.5 thread)
14	Subframe rear, bolt hole (M 12 x 1.5 thread)
15	RA strut mount, take-up hole
16	Engine mount, take-up hole
17	Impact absorber / pipe rear, bolt hole (M 8 thread)
18	Platform / jacking point front, take-up hole
19	Rear jacking point, take-up hole
20	Rear platform, take-up hole
21	Front bottom closing section, take-up hole
VA =	**front axle**
HA =	**rear axle**

5 Body parts of stronger sheet steel

The following body parts are made from stronger sheet steel!

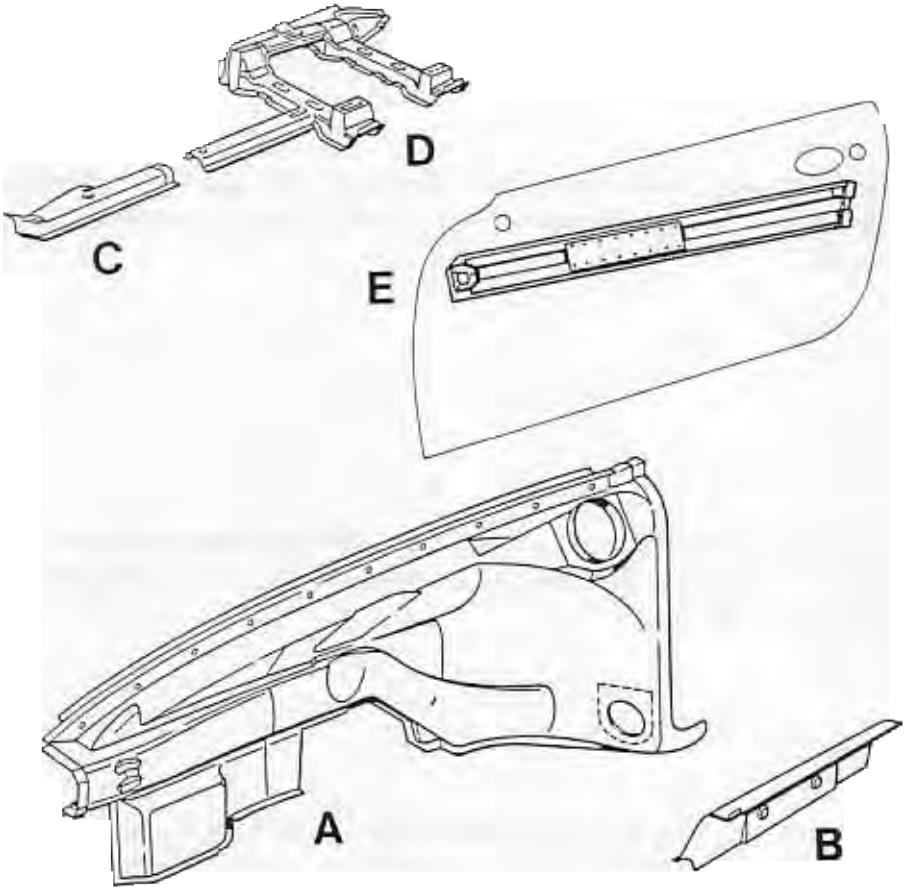

1730 - 5

A = Front wheel housing
B = Inner side member
C = Front floor section member
D = Seat base
E = Door side strip

General remarks on body parts of stronger sheet steel

Applicable to the 911 Carrera (993) types

Body parts of stronger sheet steel contribute to the strength of the passenger compartment and thus serve to protect the passengers. Furthermore, the fatigue strength is improved in addition to the crash safety.

In terms of crash behaviour, body parts made from stronger sheet steel are distinguished for their high energy absorption. But this also means that higher reshaping force must be applied in straightening work.

Welding work

Body parts of stronger sheet steel can be welded using the MIG welding processes that are customary in workshops. The use of the oxycetylene welding process is not permissible for body parts made from stronger sheet steel.

Repair note:

If significant deformation in this type of body panels has occurred, they cannot be brought back into shape by straightening. Body repairs therefore require fitting of new panels and/or sectional repairs.

For these purposes, only "Original Porsche Parts" and/or sections of "Original Porsche Parts" must be used!

Dimensions for Cabriolet

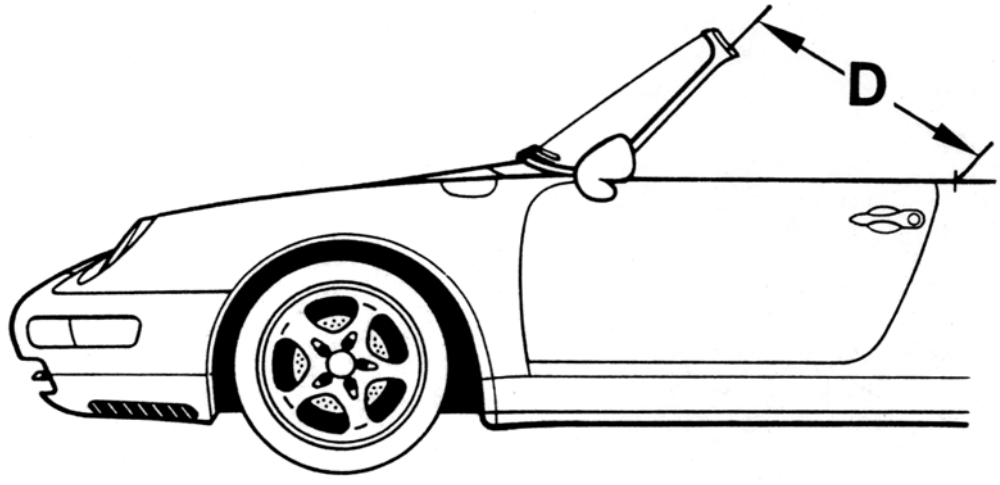

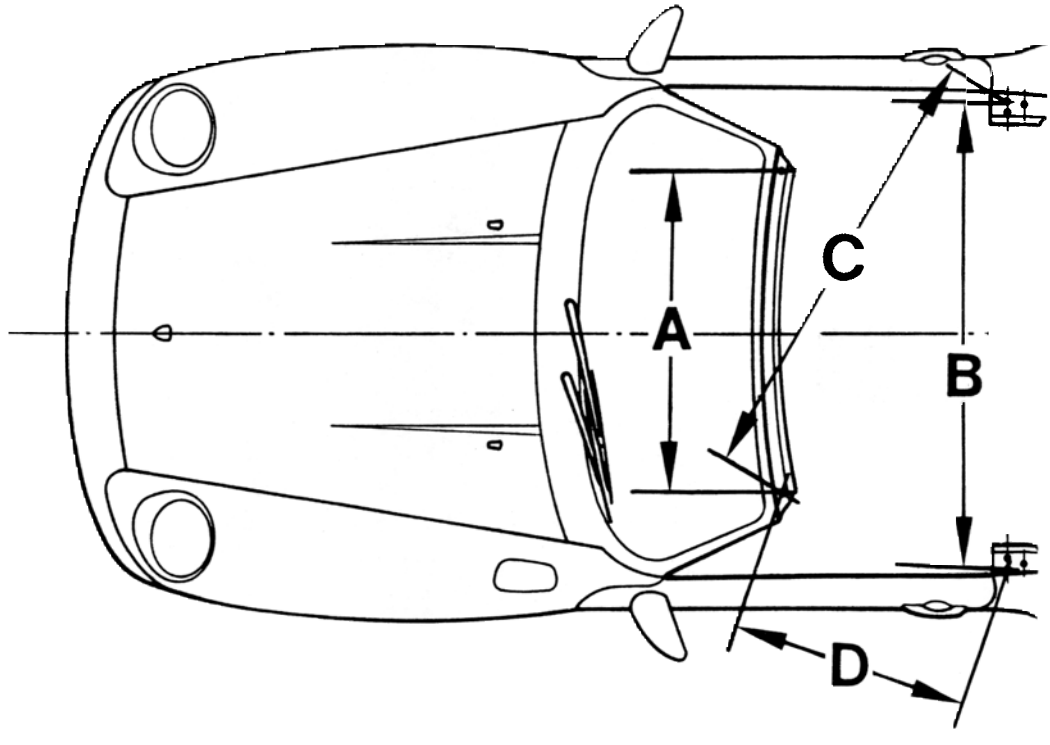

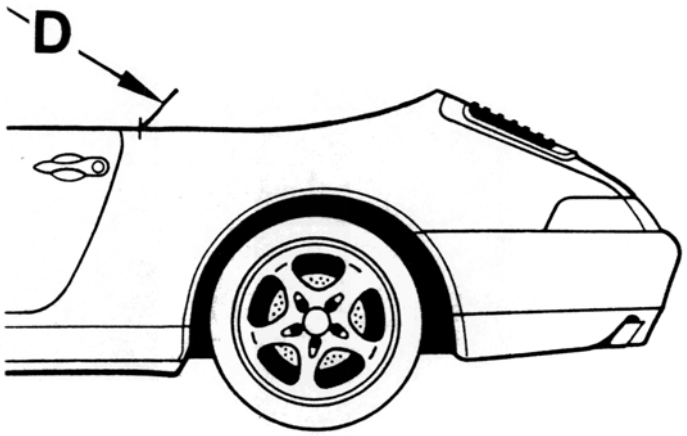

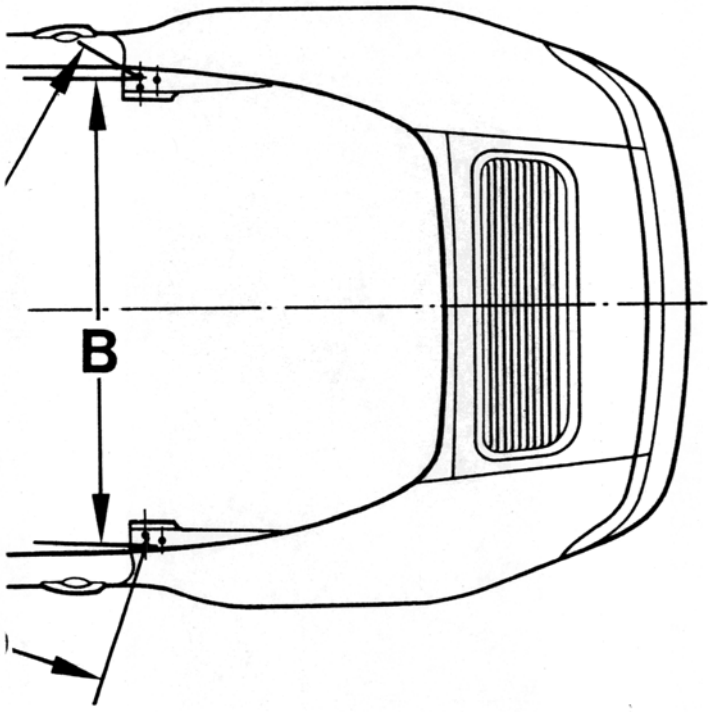

Dim. mm		Designation
A	930 ± 2	**Horizontal distance** between the **mountings** for the **right locating peg** and the **left locating peg** of the convertible top.
B	1306 ± 2	**Horizontal distance** between the **outer bolt hole** for the **right convertible top mount** and the **outer bolt hole** for the **left convertible top** mount on the **B-pillars.**
C	1340 ± 3	**Diagonal distance** between the **mounting** for the convertible top **locating peg** and the **outer bolt hole**, for the **convertible top mount** on the **B-pillar.**
D	763 ± 3	**Inclined distance** between the **mounting** for the convertible top **locating peg** and the **outer bolt hole** for the **convertible top mount** on the **B-pillar.**

Note
All dimensions are measured between bolt hole centres.

50 56 19 Removing and installing wheel housing liner

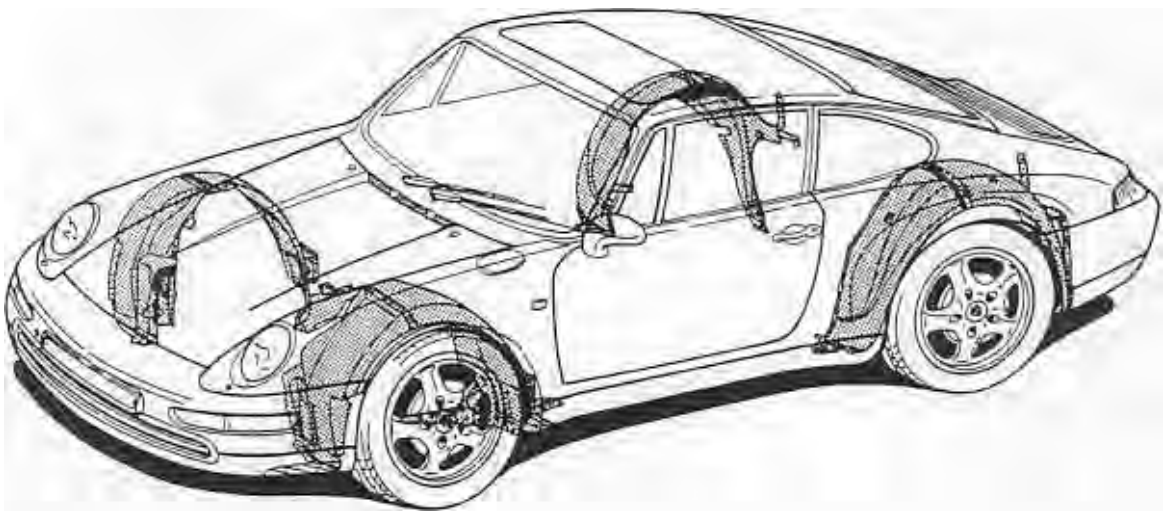

50 56 19 Removing and installing wheel housing liner

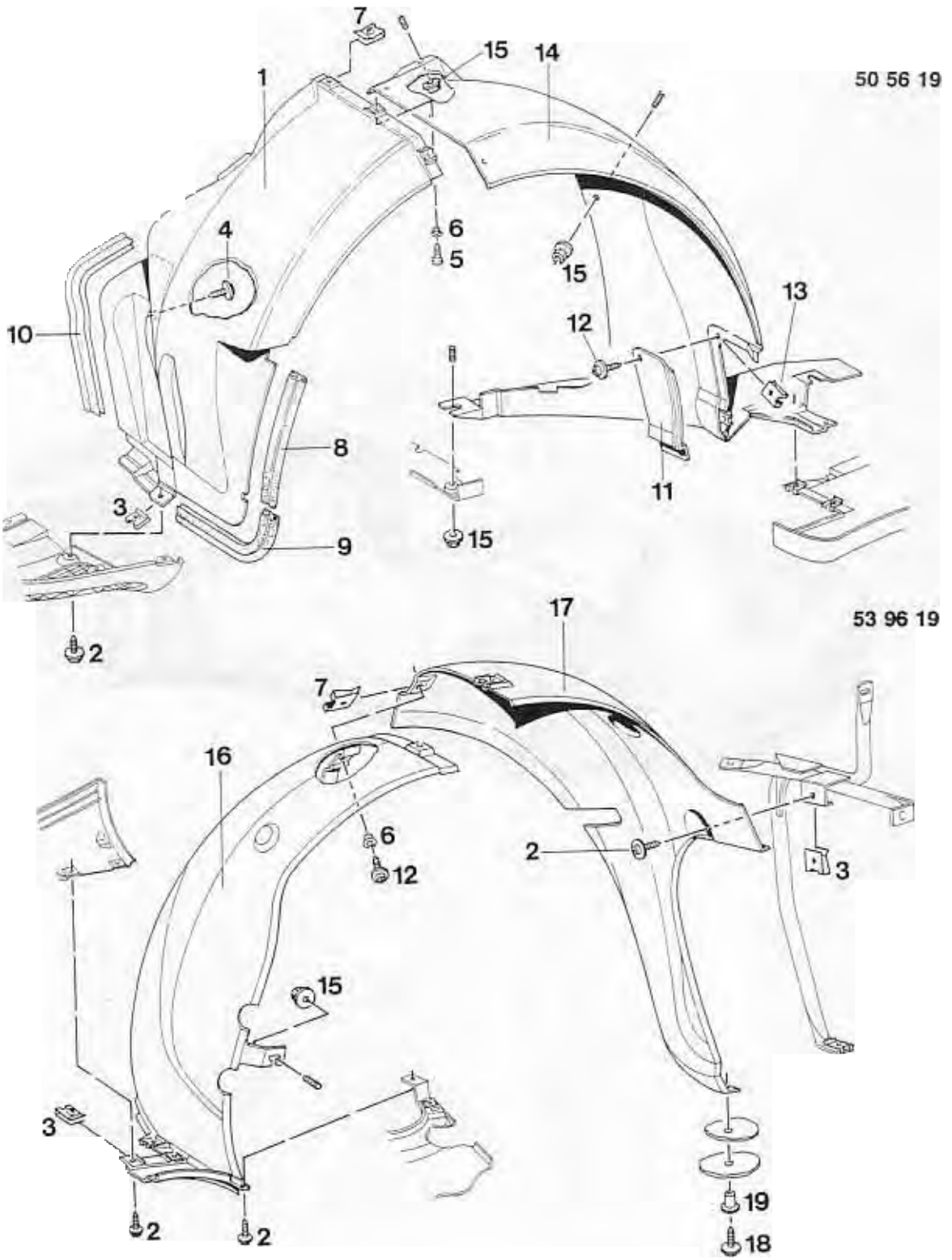

50 56 19 Removing and installing wheel housing liner

No.	Designation	Qty.	Note: Removal	Installation
1	Wheel arch wall	2		
2	Screw with washer B 4.8 x 19	2		
3	Sheetmetal nut B 4.8	2		Adjust to center of hole
4	Screw with washer B 4.8 x 16	6		
5	Self-tapping screw B 4.2 x 13	6		
6	Spacer	6		
7	Sheetmetal nut B 4.2	6		Adjust to center of hole
8	Rubber weatherstrip	2		Check, replace if required
9	Rubber weatherstrip	2		Check, replace if required
10	Rubber section	2		Check, replace if required
11	Cover	1		
12	Screw with washer B 4.8 x 19	4		
13	Sheetmetal nut B 4.8	4		Adjust to center of hole
14	Wheel housing trim	2		
15	Plastic nut T 5	4		Check, replace if required

50 10 55 Replacing closing panel

The following body spare part is required for the "Replacing closing panel" body repair operation:

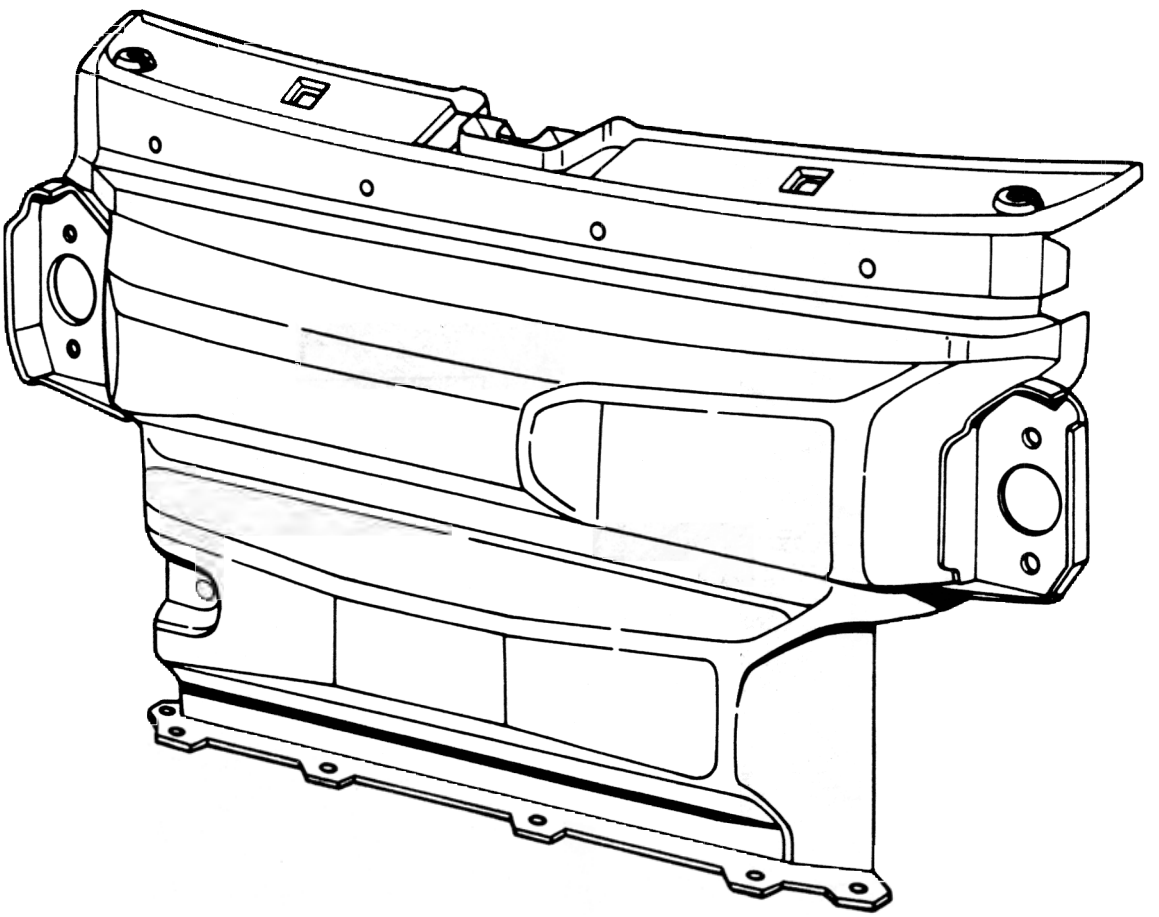

1747 - 50

Closing panel

50 10 55 Replacing closing panel

Cutting closing panel out of body

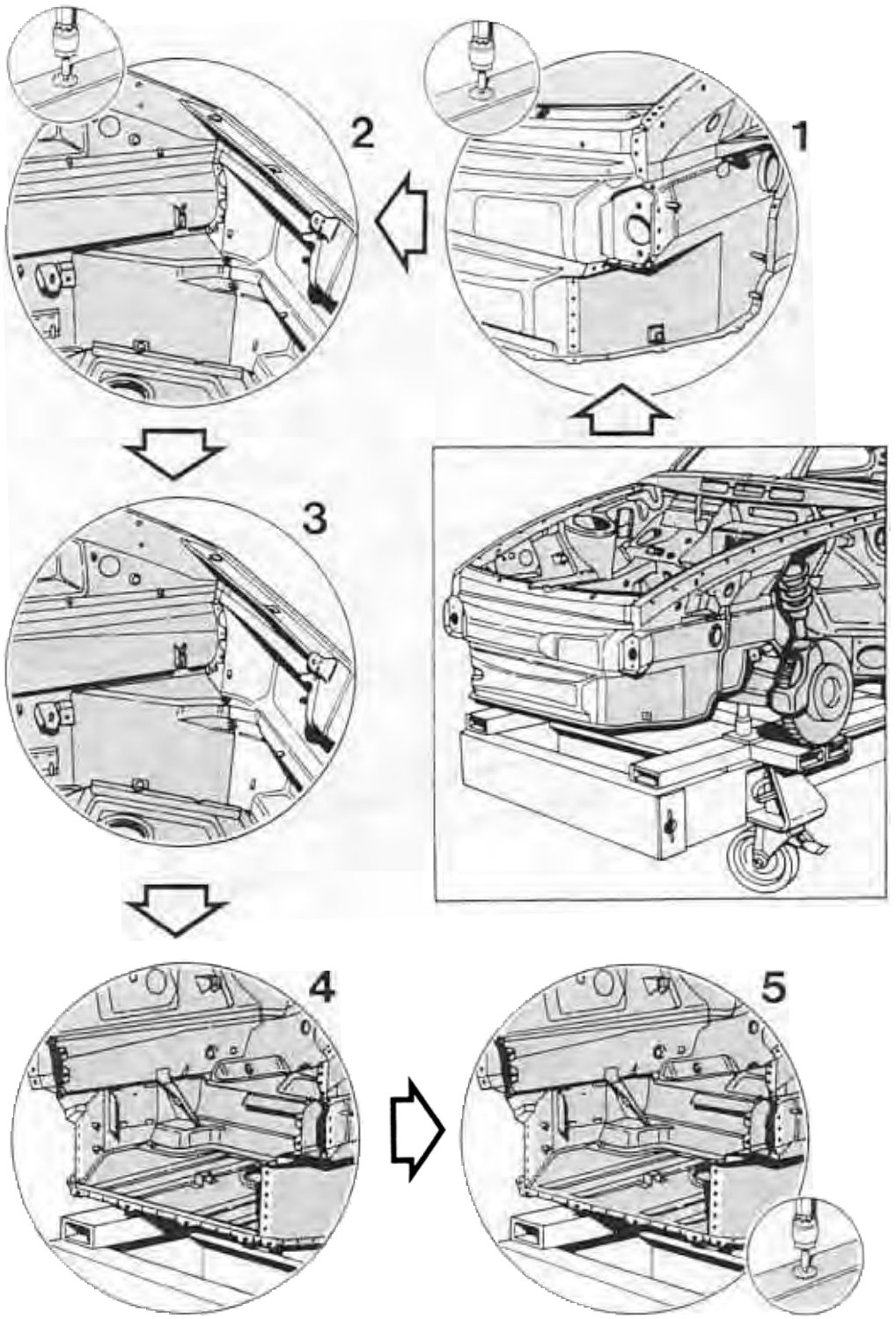

50 10 55 Replacing closing panel

Cutting closing panel out of body

No.	Operation	Instructions
	Place vehicle on straightening equipment	Place vehicle with fitted ancillaries onto straightening attachment set and tie down vehicle.
1	Separate spotwelds of closing panel to wheel housings and gusset plates	Separate spotwelds of closing panel to wheel housings and gusset plates from outside using a spotweld cutter.
2	Separate spotwelds between closing panel and side members	Separate spotwelds of closing panel to side members working from inside (trunk side) using a spotweld cutter.
3	Separate welding joints between joints between closing panel and gusset plates	Grind off MIG weld joints between closing panel and gusset plates.
4	Cut out closing panel above spare wheel well	Cut off closing panel above spotweld joint of closing panel to spare wheel well using a body saw and take out panel.
5	Separate spotwelds between closing panel and spare wheel well	Separate spotwelds of closing panel to spare wheel well from above using a spotweld cutter.

50 10 55 Replacing closing panel

Fitting closing panel to body

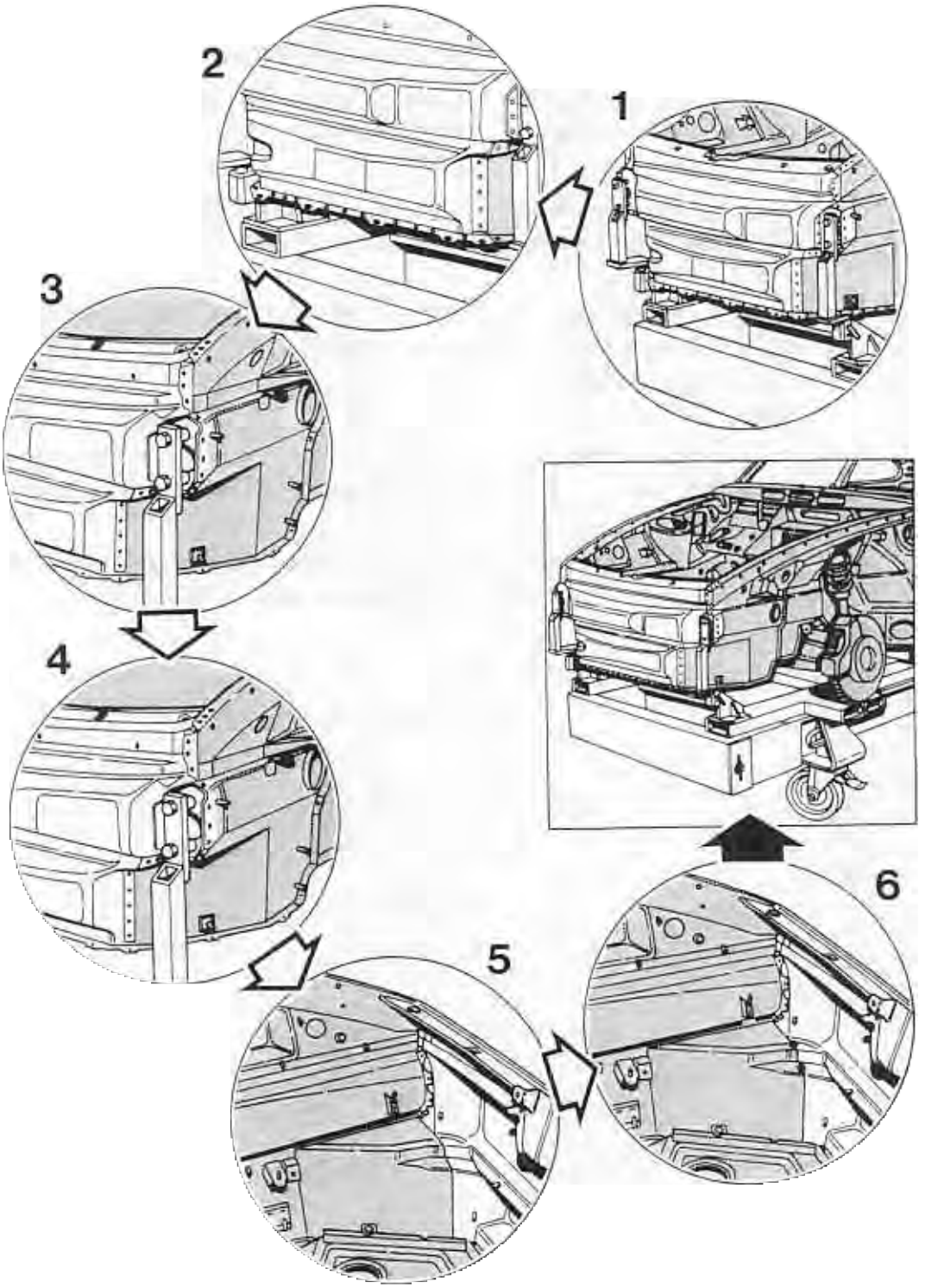

50 10 55 Replacing closing panel

Fitting closing panel to body

No.	Operation	Instructions
	Clean welding areas	Using a hot air gun or rotary wire brush, remove undersealant, paint etc. from welding areas of body. Remove factory primer from welding areas of spare part (closing panel), using a rotary wire brush.
1	Attach closing panel to straightening brackets	Trial-fit closing panel to body and attach to straightening brackets.
2	Spotweld closing panel to spare wheel well	Align spare wheel well to closing panel, attach with clamping tools and spotweld into place.
3	Plug weld gusset plates to closing panel	Align gusset plates to closing panel and plug weld with MIG equipment.
4	Plug weld wheel housings to closing panel	Align wheel housing to closing panel, attach with clamping tools and plug weld with MIG equipment.
5	Plug weld side members to closing panel	Align side members to closing panel and plug weld with MIG equipment.
6	MIG-weld gusset plates to closing panel	MIG-weld gusset plates to closing panel **(only along horizontal joints)** running a full seam.

50 74 55 Replacing wheel housing

Replacing part of wheel housing and side member

The following body spare parts are required for the "Replacing part of wheel housing and side member" sectional repair operation:

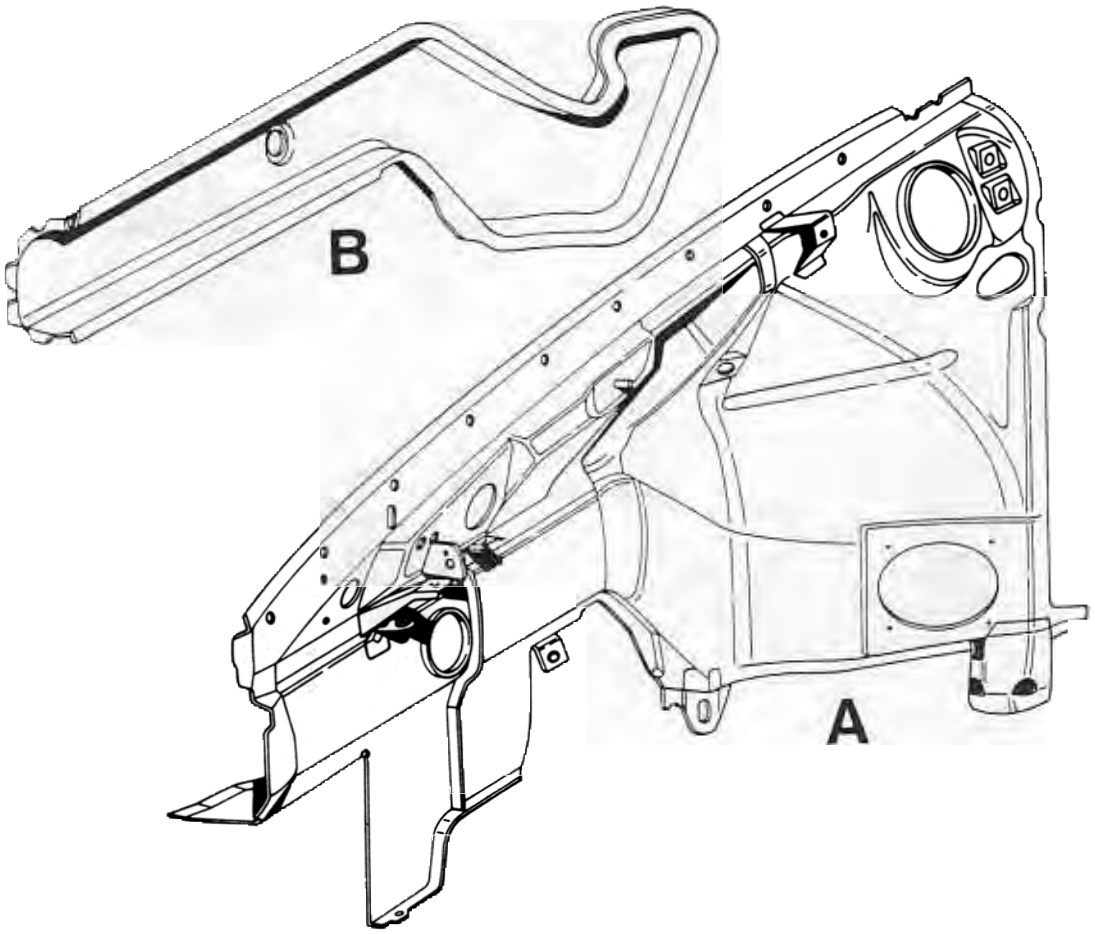

A = Front wheel housing

B = Front side member

Replacing part of wheel housing and side member

Cutting wheel housing and side member out of body

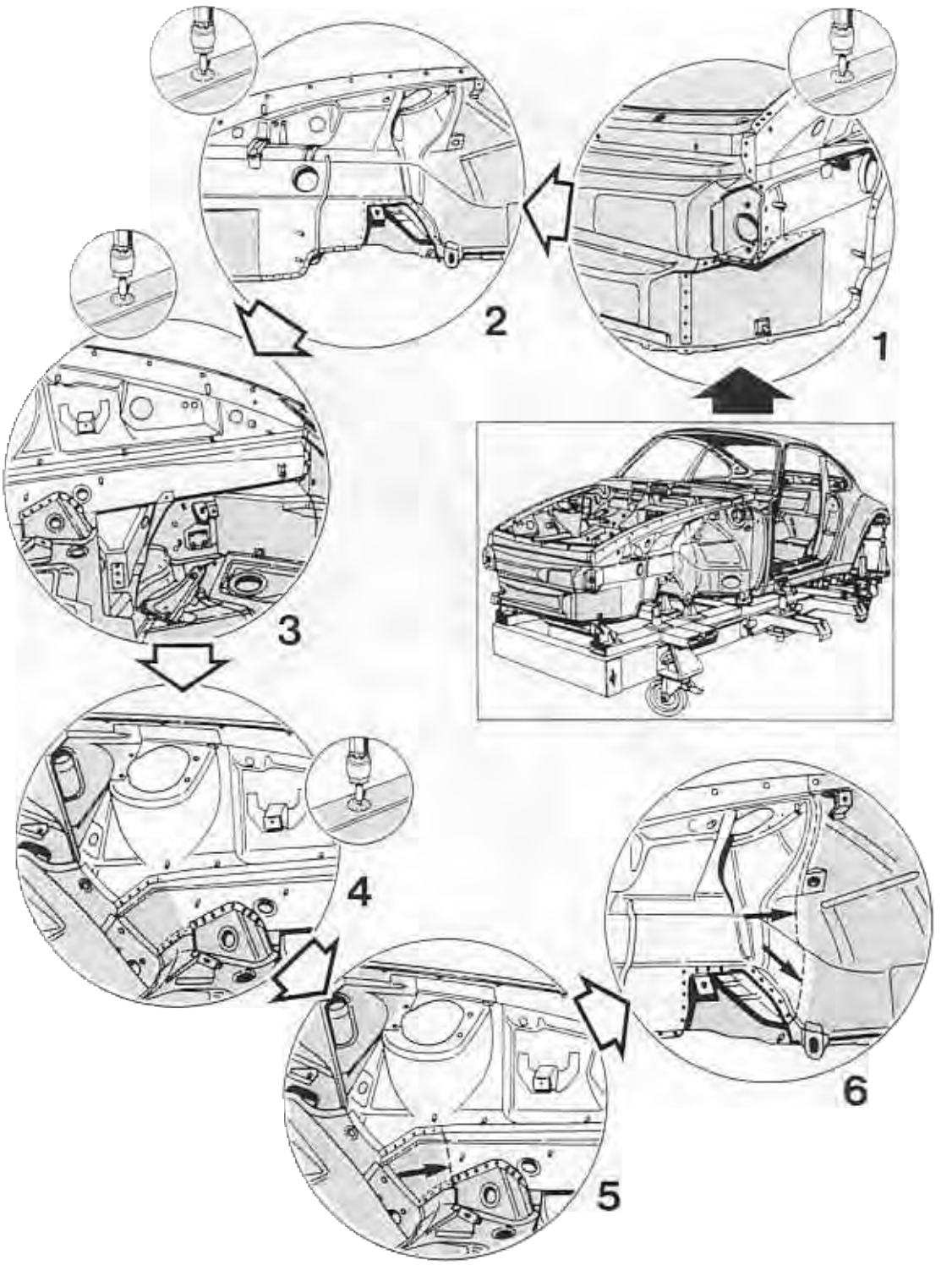

Replacing part of wheel housing and side member

Cutting wheel housing and side member out of body

No.	Operation	Instructions
	Place vehicle on straightening equipment	Place vehicle with rear-mounted ancillaries onto straightening attachment set and tie down vehicle.
1	Separate spotwelds of wheel housing to gusset plate and closing panel	Separate spotwelds of wheel housing to gusset plate and closing panel from outside using a spotweld cutter.
2	Separate spotwelds of wheel housing to spare wheel well, front floor section and member	Separate spotwelds of wheel housing to spare wheel well, front floor section and member from outside using a spotweld cutter.
3	Separate spotwelds of side member to closing panel, front cross member and gusset plate	Separate spotwelds of side member to closing panel, front crossmember and gusset plate from inside (luggage compartment side) using a spotweld cutter.
4	Separate side member to strut dome spotwelds and member to strut dome spotwelds	Separate spotwelds of side member to strut dome and spotwelds of member to strut dome from inside (trunk side) using a spotweld cutter.
5	Cut through side member	Using a body saw, cut through side member approx. 10 mm behind gusset plate in vertical direction.
6	Cut through wheel housing	Using a body saw, cut through wheel housing along strut dome panel and take out housing. **Caution: Make sure the member is not cut through completely.**

Replacing part of wheel housing and side member

Fitting wheel housing and side member into body

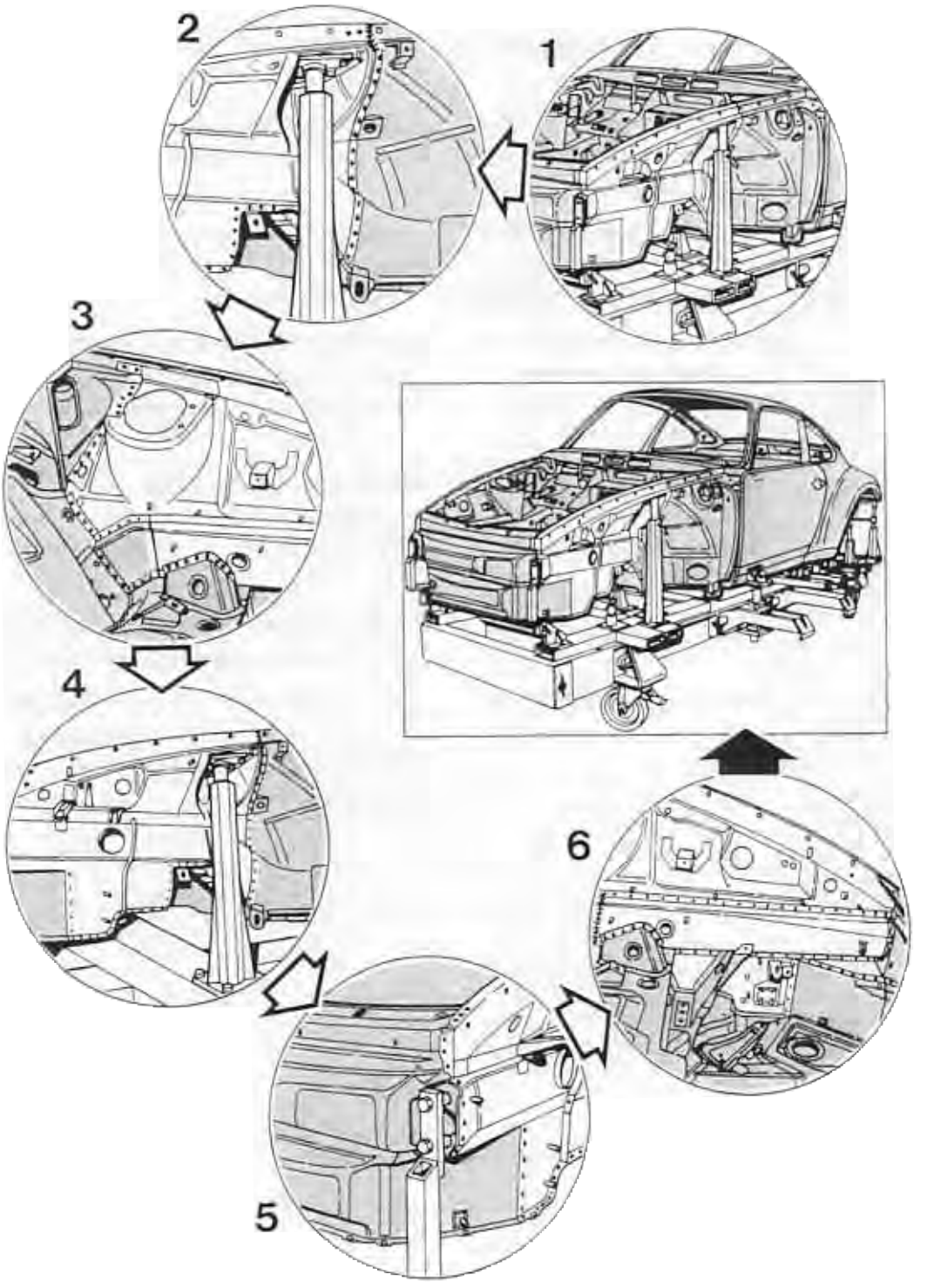

Replacing part of wheel housing and side member

Fitting wheel housing and side member into body

No.	Operation	Instructions
	Clean welding areas	Using a hot air gun or rotary wire brush, remove undersealant, paint etc. from welding areas of body. Remove factory primer from welding areas of spare parts (wheel housing, side member), using a rotary wire brush.
	Offer up wheel housing into body	Joddle wheel housing (spare part) towards outside and trial-fit to body wheel housing, making an overlap joint. Trial-fit wheel housing in fender mating area, making a butt joint.
1	Attach wheel housing to straightening bracket	Attach wheel housing to straightening bracket. Tack-weld wheel housing to mating sections of wheel housing to body, gusset plate and closing panel, using MIG equipment.
2	Weld wheel housing to body wheel housing	MIG-weld along fender mating flanges, running a butt full seam. Spotweld wheel housing to member. Spotweld wheel housing between member and side member. Plug-weld wheel housing from side member area, using MIG equipment.
3	Plug-weld member with strut dome	Attach member with clamping tools to strut dome and plug-weld with MIG equipment.
4	Spot-weld wheel housing to front floor section, spare wheel well and gusset plate	Align front floor section and spare wheel well to wheel housing, attach with clamping tools and spotweld into place. Align gusset plate to wheel housing and spotweld into place.
5	Spotweld wheel housing to closing panel	Align closing panel to wheel housing, attach with clamping tools and spotweld.

No.	Operation	Instructions
6	Weld in side member	Align side member with wheel housing so that the butt joint between the spare side member and body side member is offset to the joint between the body wheel housing and spare wheel housing. Butt-weld spare side member and body side member with MIG equipment, running a full seam. Spot weld side member to wheel housing. Plug weld cross member to side member and gusset plate to side member with MIG equipment. Align side member with closing panel and plug weld with MIG equipment.
	Cut down weld joints	Grind down butt weld joint of side member and butt weld joint in the fender mating area.

50 53 55 Replacing fender connection panel

Partially replacing fender connection panel

The following body spare part is required for the "Partially replacing fender connection panel" body repair operation:

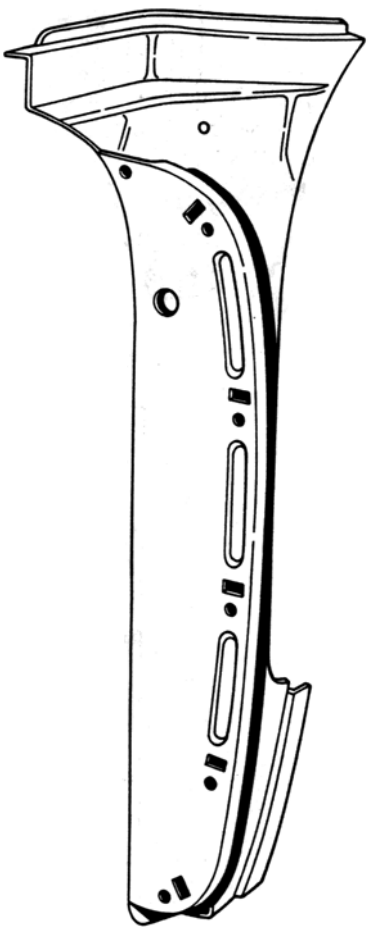

1753 - 50

Fender connection panel

Partially replacing fender connection panel

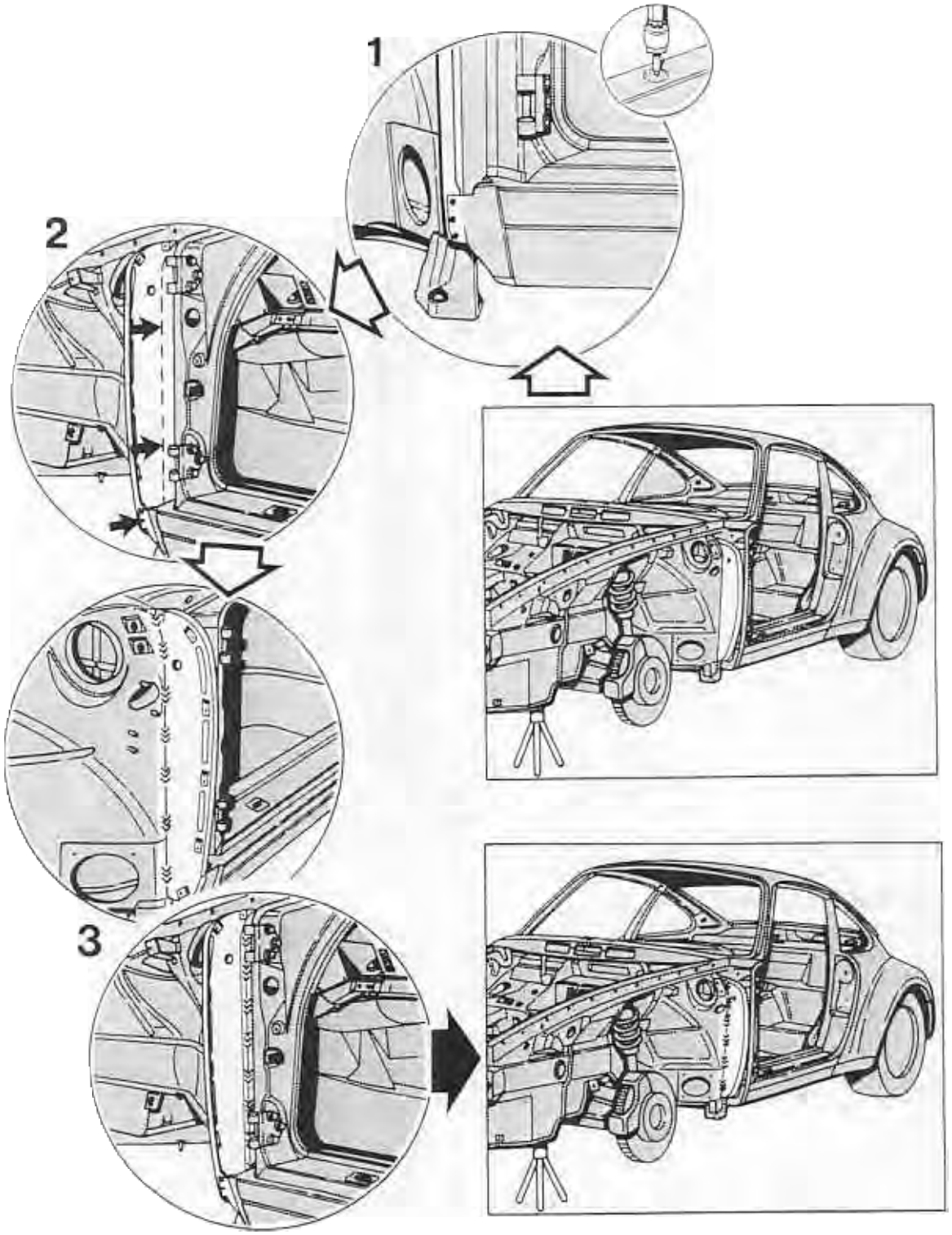

Partially replacing fender connection panel

Complete all body straightening operations in this area before the fender connection panel is replaced!

No.	Operation	Instructions
	Separate spotwelds of fender connection panel to door sill	Separate spotwelds of fender connection panel to door sill using a spotweld cutter.
2	Cut off fender connection plate	Cut off the narrow leg of the fender connection panel along the wheel housing.
	Align separating area of fender connection panel remaining attached to body and grind down	
	Prepare and offer up fender connection panel	Cut down fender connection panel along wide leg to approx. 20 mm and align with wheel housing. Drill fender connection panel for plug welding in the door sill area. Using a rotary wire brush, remove factory primer from welding areas of fender connection panel.
3	Weld fender connection panel into place	MIG-weld fender connection panel along both sides, running an intermittent full seam. Plug weld fender connection panel to door sill using MIG equipment.

50 74 56 Replacing wheel housings

Replacing part of front end

The following body spare parts are required for the "Replacing part of front end" sectional repair operation:

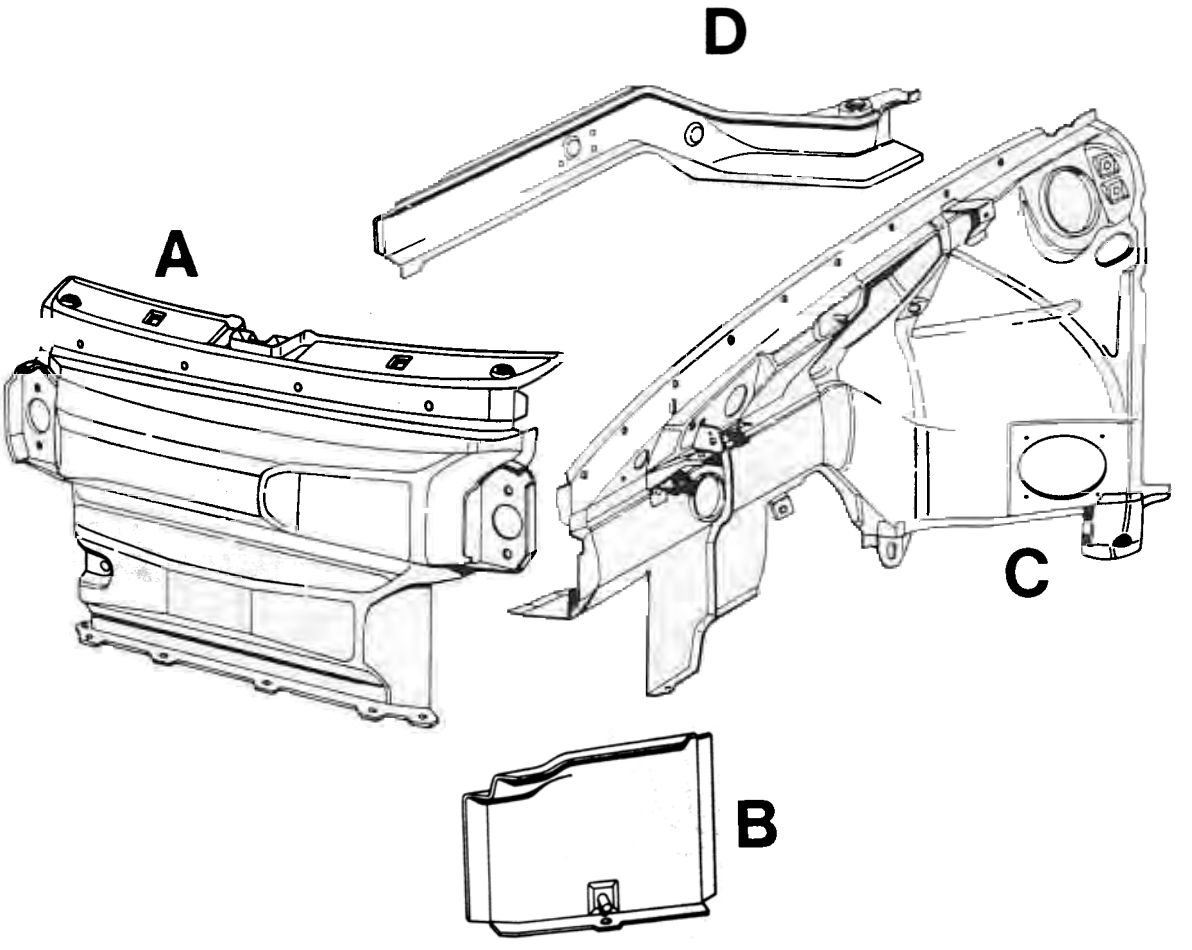

A = Closing panel

B = Gusset plate

C = Front wheel housing

D = Front side member

Replacing part of front end

Cutting closing panel and gusset plate completely and wheel housings and side members partially out of body

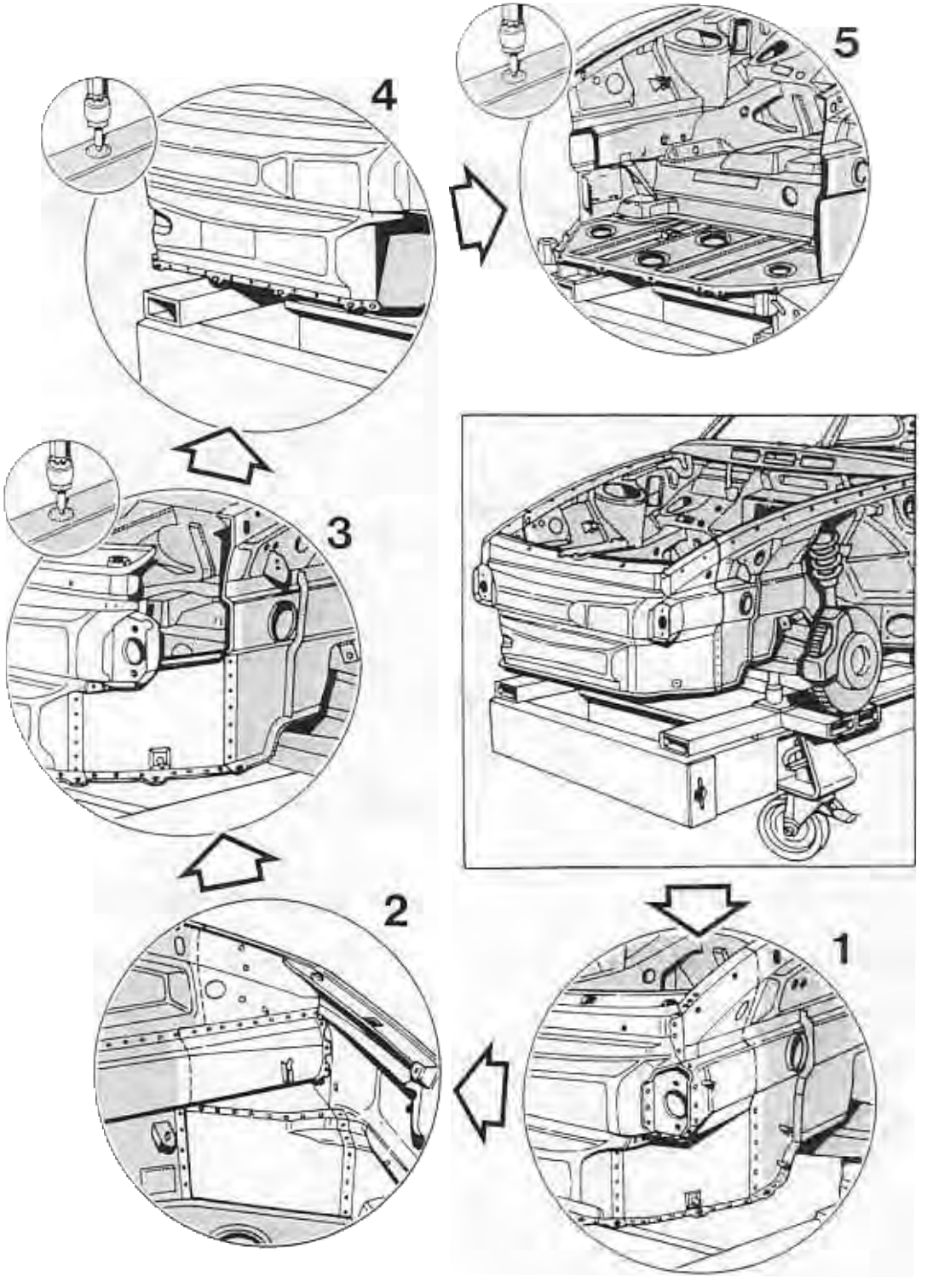

Replacing part of front end

Cutting closing panel and gusset plate completely and wheel housings and side members partially out of body

No.	Operation	Instructions
	Place vehicle on straightening equipment	Place vehicle with fitted ancillaries onto straightening attachment set and tie down vehicle.
1	Cut off wheel housings	Cut off damaged wheel housing areas using a body saw.
2	Cut off side members	Cut off damaged areas of side members with body saw.
3	Separate spotwelds of gusset plates	Separate spotwelds between gusset plate, spare wheel well and wheel housings with a spotweld cutter.
4	Separate spotwelds of closing panel	Separate spotwelds between closing panel and spare wheel well with a spotweld cutter
5	Shorten side member to give an offset with regard to the wheel housings	Shorten side members with body saw and spotweld cutter until an offset of approx. 50 mm is produced between side member and wheel housing.

Replacing part of front end

Fitting closing panel and gusset plates completely and wheel housings and side members partially into body

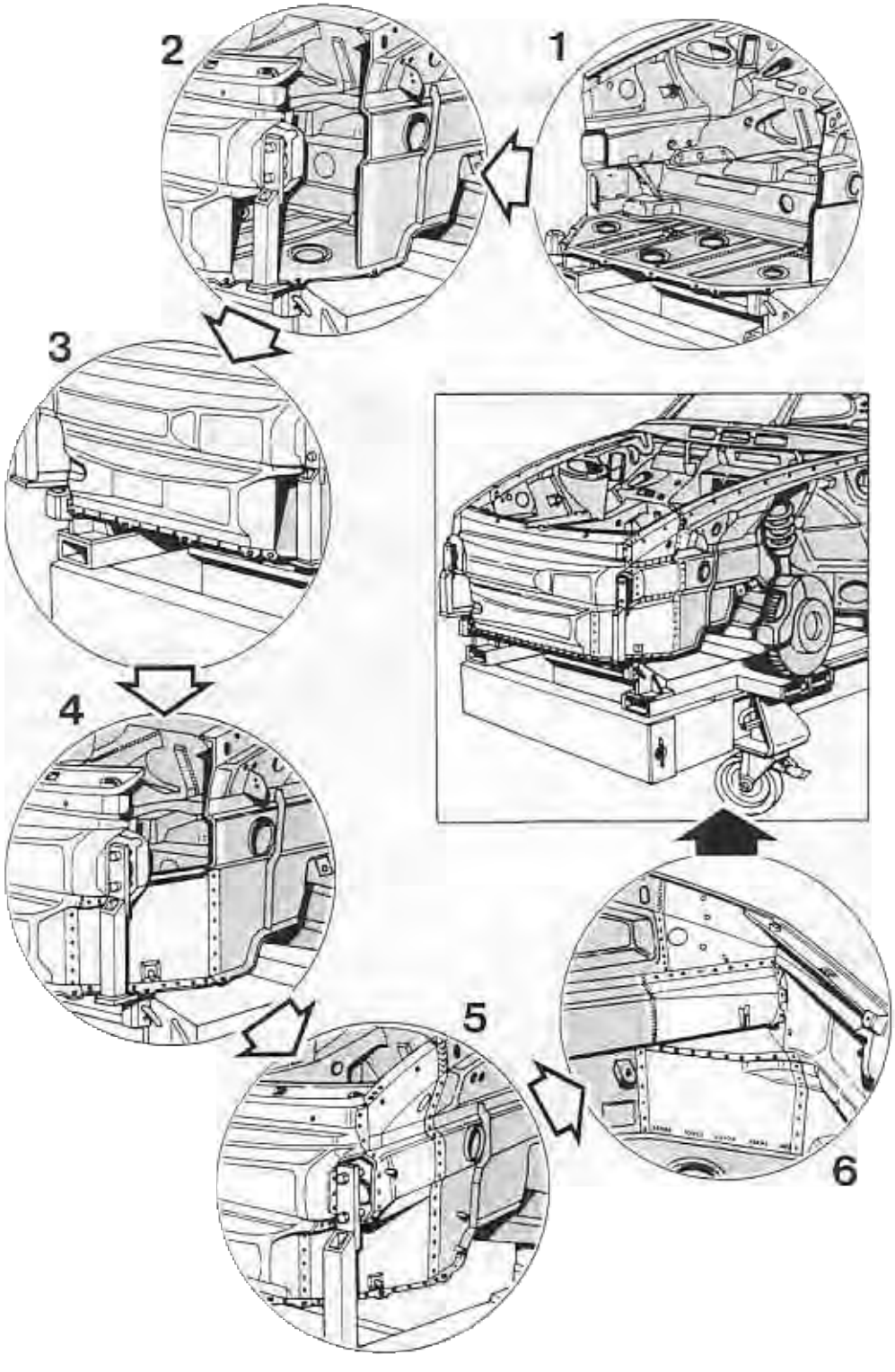

Replacing part of front end

Fitting closing panel and gusset plates completely and wheel housings and side members partially into body

No.	Operation	Instructions
1	Clean welding areas	Using a hot air gun or rotary wire brush, remove undersealant, paint etc. from welding areas of body.
2	Attach closing panel to straightening brackets	
3	Weld closing panel to spare wheel well	Offer up spare wheel well to closing panel, attach with clamps and spotweld into place.
4	Weld in gusset plates	Offer up gusset plates, attach with clamps to spare wheel well, closing panel and wheel housings and spotweld into place.
5	Weld in wheel housings and side members	Cut off and align wheel housings and side members. Joddle wheel housings towards outside and attach to body with clamping tools. Spotweld wheel housings to mating parts. Saw in at fender mating surfaces and butt weld into place.
6	Weld in side members and cut down butt weld joints	Offer up side members to wheel housings so that the butt joints of the mating parts are offset with regard to the gusset plates and wheel housings. Butt weld side members and mating panels. Spotweld side members, wheel housings and closing panel. Grind down butt weld joints of side members.

50 95 55 Replacing front end

Replacing complete front end

The following body spare parts and special tools are required for the "Replacing front end" sectional repair operation:

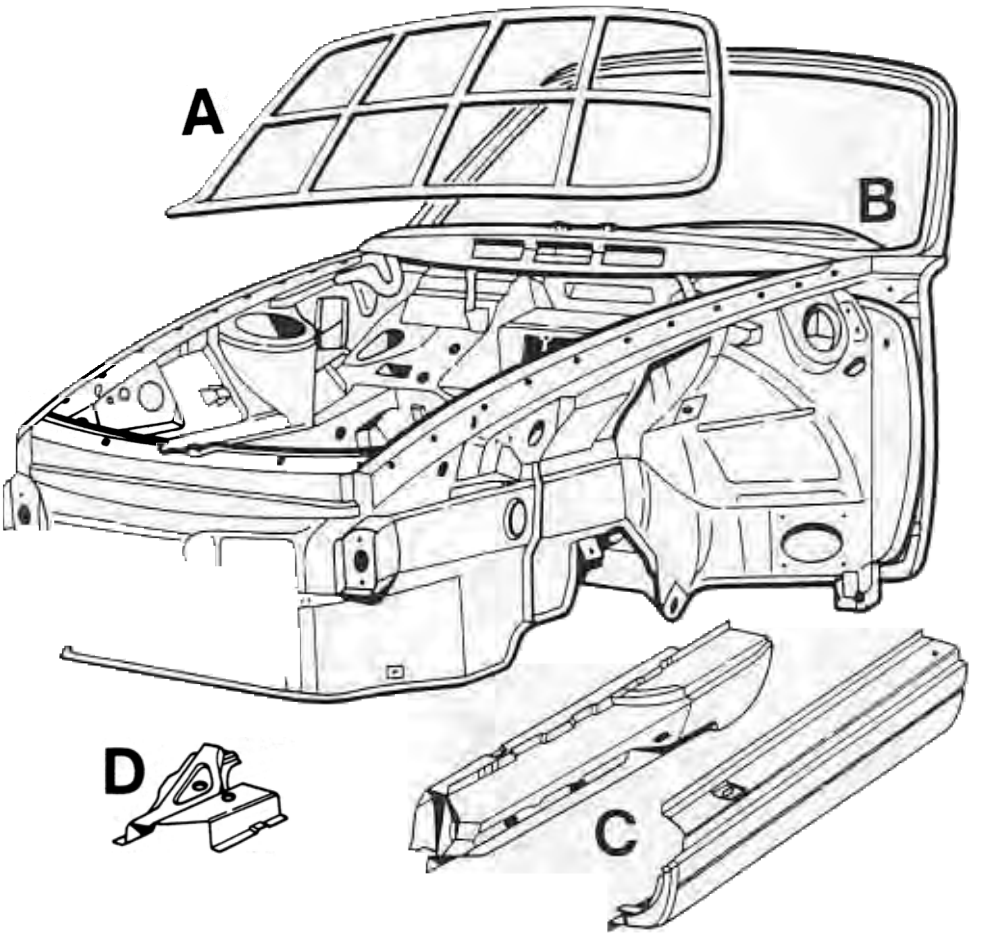

Special Tool P 852

Front end

C = Door sill

D = Left-hand floor reinforcement (for LHD vehicles only)

Replacing complete front end

Cutting front end off the body

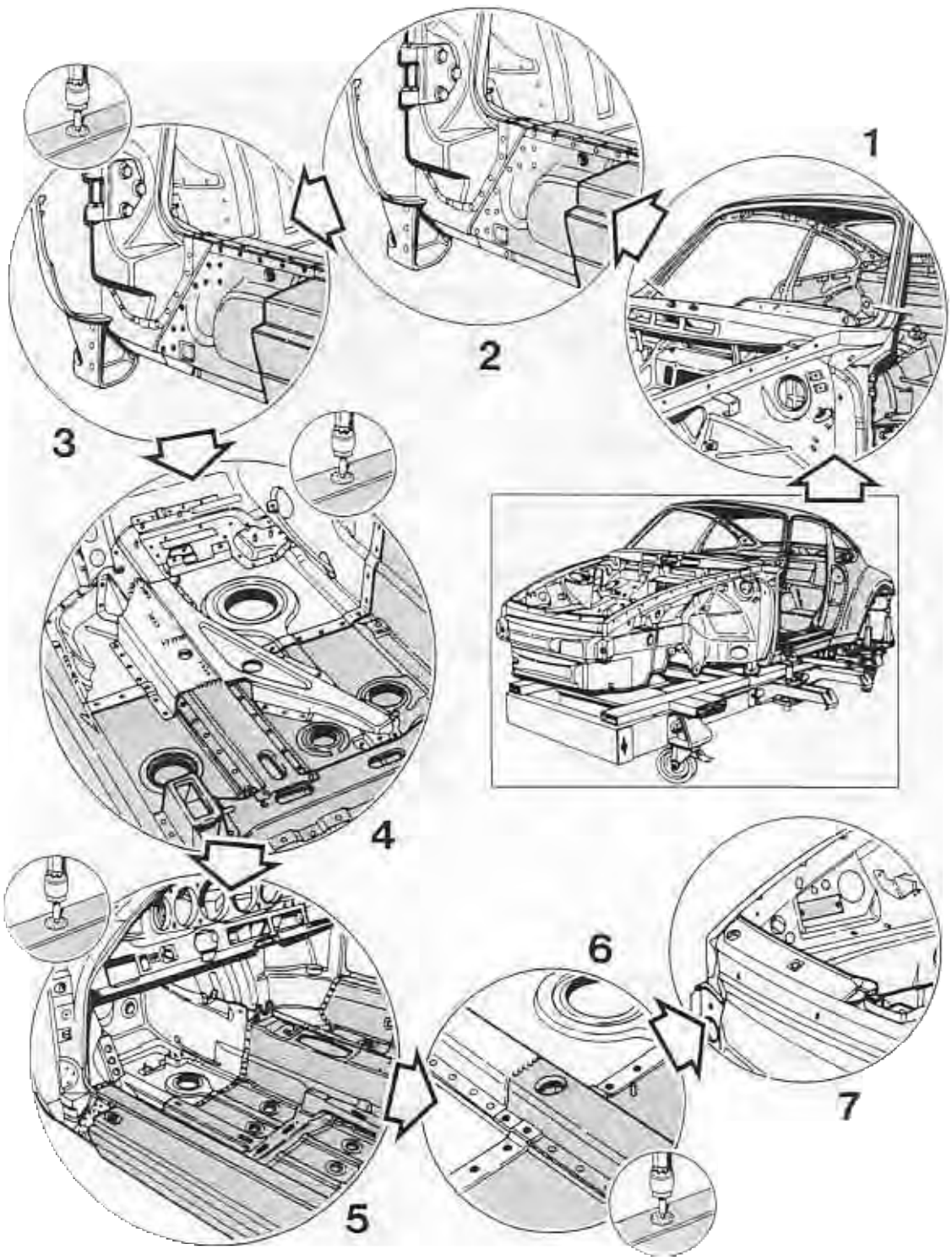

Replacing complete front end

Cutting front end off the body

Remove all ancillaries and accessories at and near the front end!

No.	Operation	Instructions
	Place vehicle on straightening equipment	Place vehicle with rear-mounted ancillaries onto straightening attachment set and tie down vehicle.
1	Cut through A-pillars	Cut through A-pillars as closely as possible to the front end using a body saw.
2	Cut through door sills	Using a body saw, cut through door sills up to the outer side member and remove in the spotweld area between body side member and front end side member.
3	Separate spotwelds of side member	Separate spotwelds between body side member (inner and outer) and front end side member using a body saw.
4	**LHD vehicles only:** Separate of reinforcing panel in front floor area	**LHD vehicles and left side of vehicle only:** Separate spotwelds between reinforcing panel and front body floor using a spotweld cutter. Separate weld joint between reinforcing panel, seat base and seat base extension with an angle grinder.
5	Separate spotwelds of floor panel	Separate spotwelds between body floor panel and front end panel with a spotweld cutter.
6	Separate spotwelds of seat base	Separate spotwelds between body seat base and extension (on front end floor panel) using a spotweld cutter. Grind off MIG weld seam between seat base and extension.
7	Remove identification plate	Drill off rivets and remove identification plate.

Replacing complete front end

Attaching front end to body

Replacing complete front end

Attaching front end to body

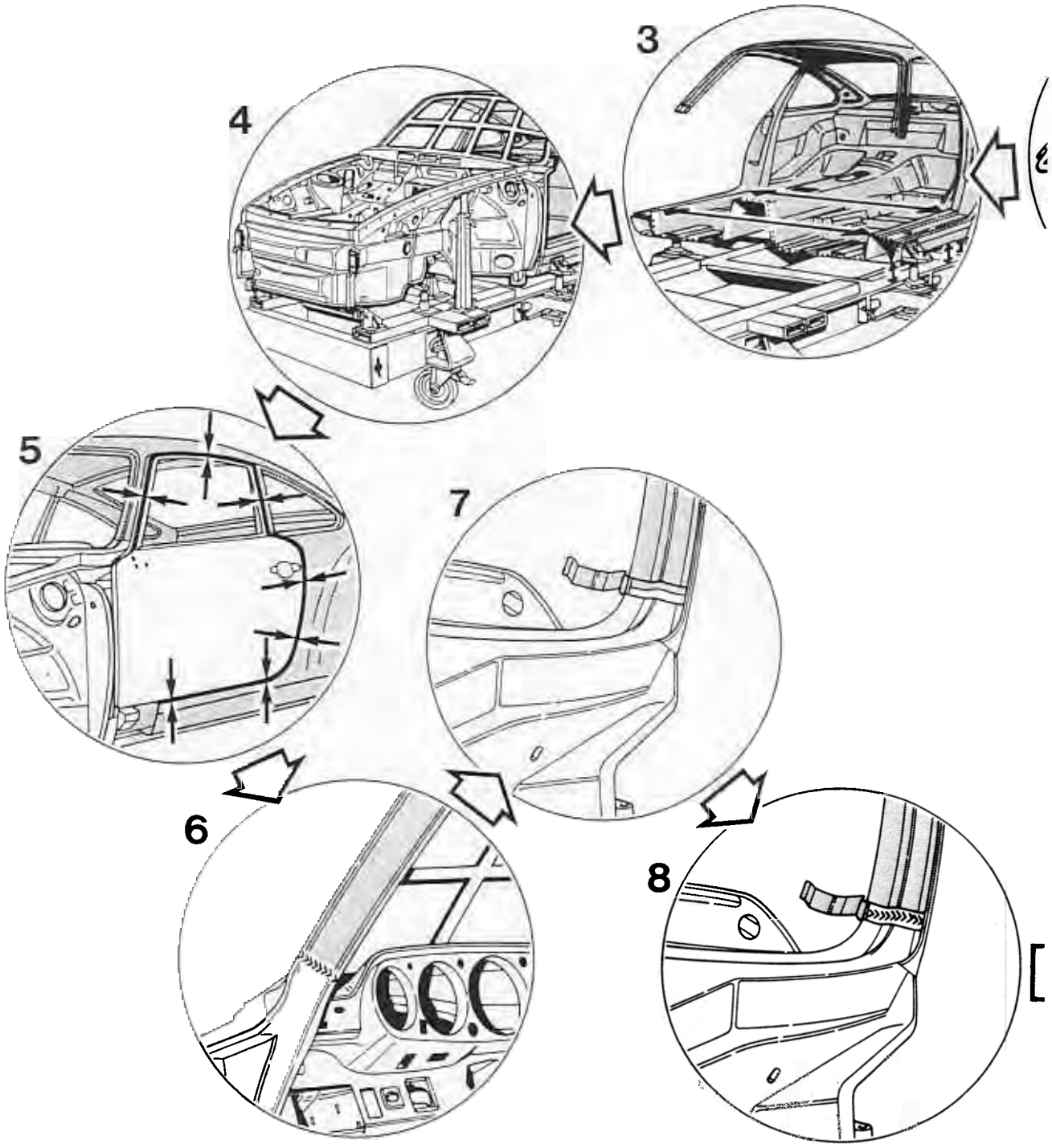

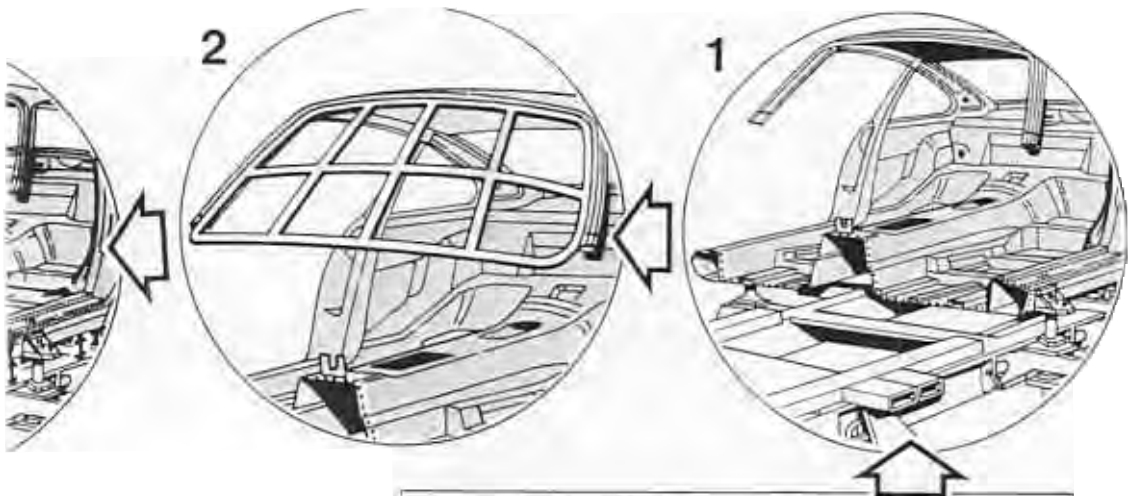
2
1

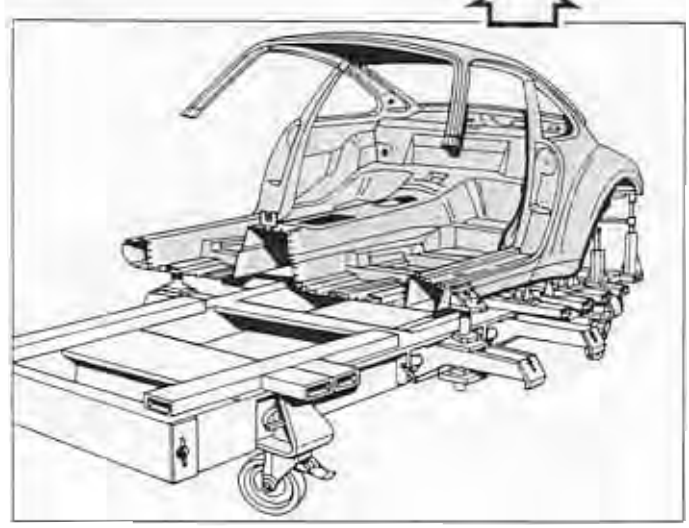

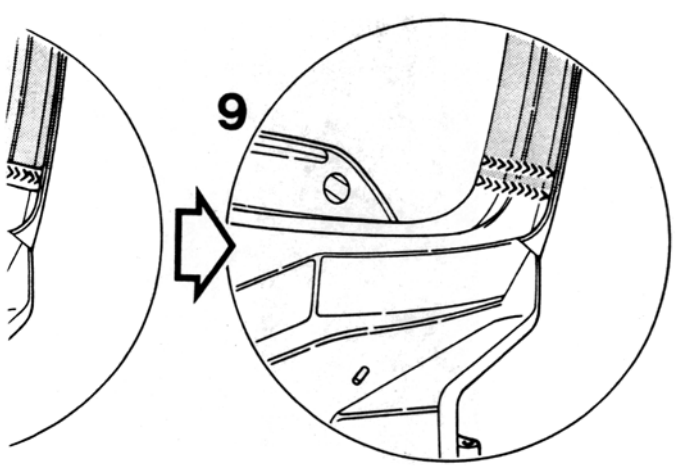
9

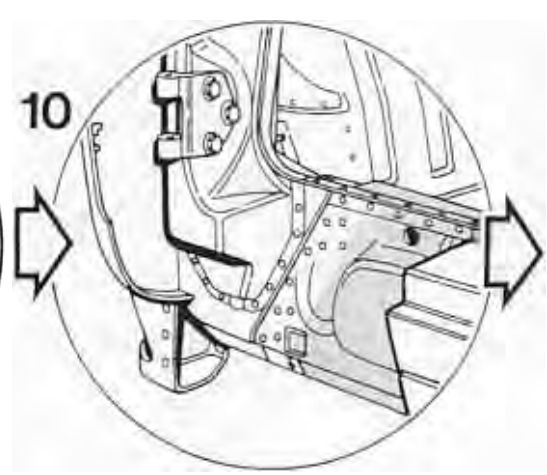
10

Replacing complete front end

Attaching front end to body

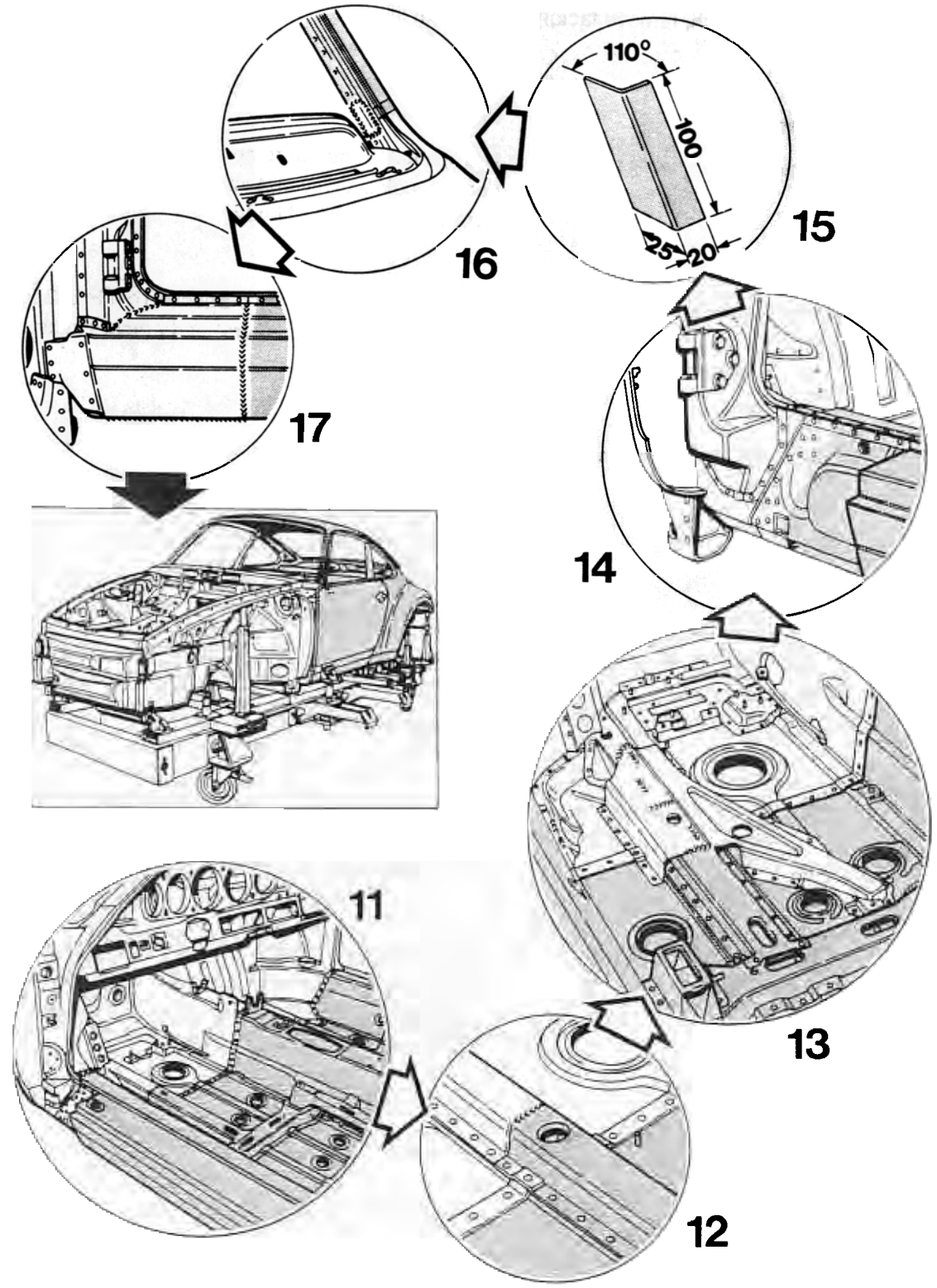

Replacing complete front end

Attaching front end to body

Using a rotary wire brush, remove factory primer from all welding areas of front end!

No.	Operation	Instructions
	Clean welding areas of body	Using a hot air gun or rotary wire brush, remove under-sealant, paint, cavity protection and adhesive residues from welding areas of body.
2	Align A-pillars of body	Align A-pillars according to Special Tool P 852 (gauge for body windshield aperture) and prepare cutting joints for proper welding.
3	Align side members and body floorpan	Align side members parallel to each other and parallel to the straightening equipment height. Prepare complete floorpan for proper welding along the joints with the front end.
4	Place front end onto straightening equipment and offer up to body	Place front end loosely onto straightening equipment. Place Special Tool P 852 into body windshield aperture. Align front end with body. Attach front end correctly to straightening brackets.
5	Fit doors to check overall contours of body with front end	The gap between the door and the body shell must be parallel along the entire circumference. Reomve doors after checking the door gaps.
6	Butt weld A-pillars in door aperture area	With Special Tool P 852 in place, MIG-weld seam of body A-pillar to front end A-pillar in the door aperture area, making a full butt seam. Remove Special Tool P 852 after welding is completed.

No.	Operation	Instructions
7	Open outer panels of A-pillars	To weld the inner panels, open up outer panels of A-pillars (body) along a length of approx. 20 mm and fold them up.
8	Weld inner panels of A-pillars	MIG-weld inner panels of A-pillars (body and front end), running a butt full seam.
9	Close and weld outer panels of A-pillars	Close outer A-pillar panels, straighten panels and MIG-weld with a full seam. MIG-weld body A-pillars and front end A-pillars running a butt full seam. Grind down weld seams and place Special Tool P 852 into position to check windshield aperture in body.
10	Plug weld front end side member to body side member	Align front end side member that has been inserted into the body side member. Plug weld front end side member and body side member using MIG equipment.
11	Plug weld front end side member to body side member	Align overlap area of body floorpan to front end floorpan. Plug-weld front end floorpan to body floorpan using MIG equipment.
12	Weld body seat base to front end extension with plug welds and a full seam	Plug weld right and left-hand flange of top-hat section of body seat base to front end extension using MIG equipment. MIG-weld front face of body seat base to front end extension running a full seam.
13	**LHD vehicles only:** Weld floor reinforcing panel to floorpan, seat base and seat base extension with plug welds and a full seam	**LHD vehicles and left side of vehicle only:** Plug weld front floor reinforcing panel to body floorpan using MIG equipment. MIG-weld front floor reinforcing panel to seat base and seat base extension running a full seam.

No.	Operation	Instructions
14	MIG-weld floor in side member area from below	MIG-weld body floor to front end body in side member area from below running a full seam.
15	Fabricate reinforcing brackets for A-pillars	Fabricate one reinforcing bracket each for right and left-hand A-pillars from 1.25 mm galvanized sheet steel.
16	Weld reinforcing brackets to A-pillars running a circumferential full seam	To reinforce the welds, weld the reinforcing brackets across the weld seams on the inside of the A-pillars, running a continuous full MIG seam. Grind down weld seams.
17	Weld in door sills	Offer up door sills and tack weld them. Spotweld door sills to upper side of side member. Plug weld door sill to fender connection panel with MIG equipment. MIG weld door sill to A-pillar connection panel, running an intermittent full MIG seam. MIG-weld door sill to underside of side member running a butt full seam. MIG-weld body door sill running a continuous full seam. Grind down butt welds.

51 90 19 Removing and installing underbody paneling

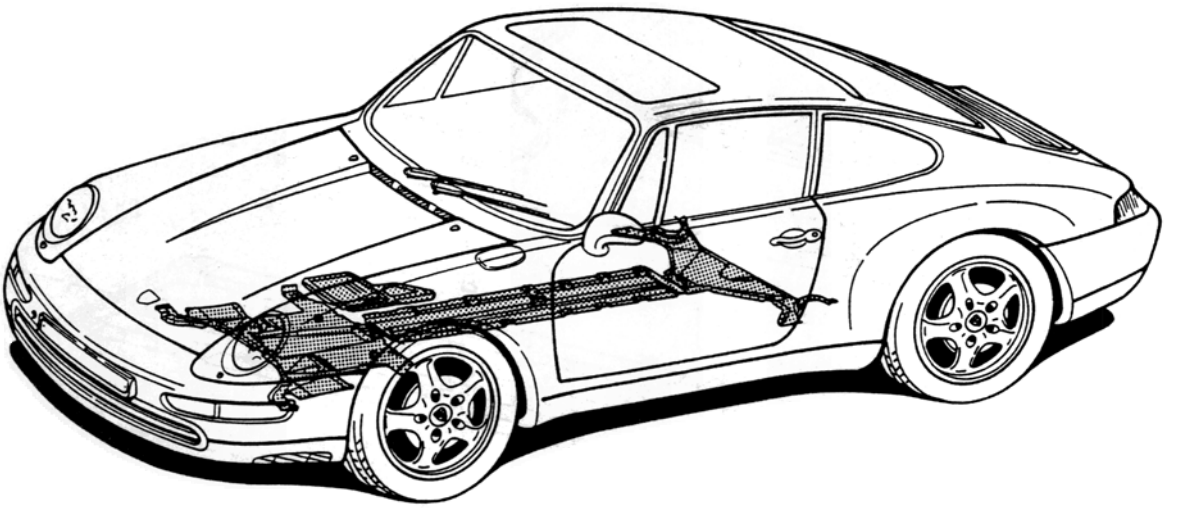

51 90 19 Removing and installing underbody paneling

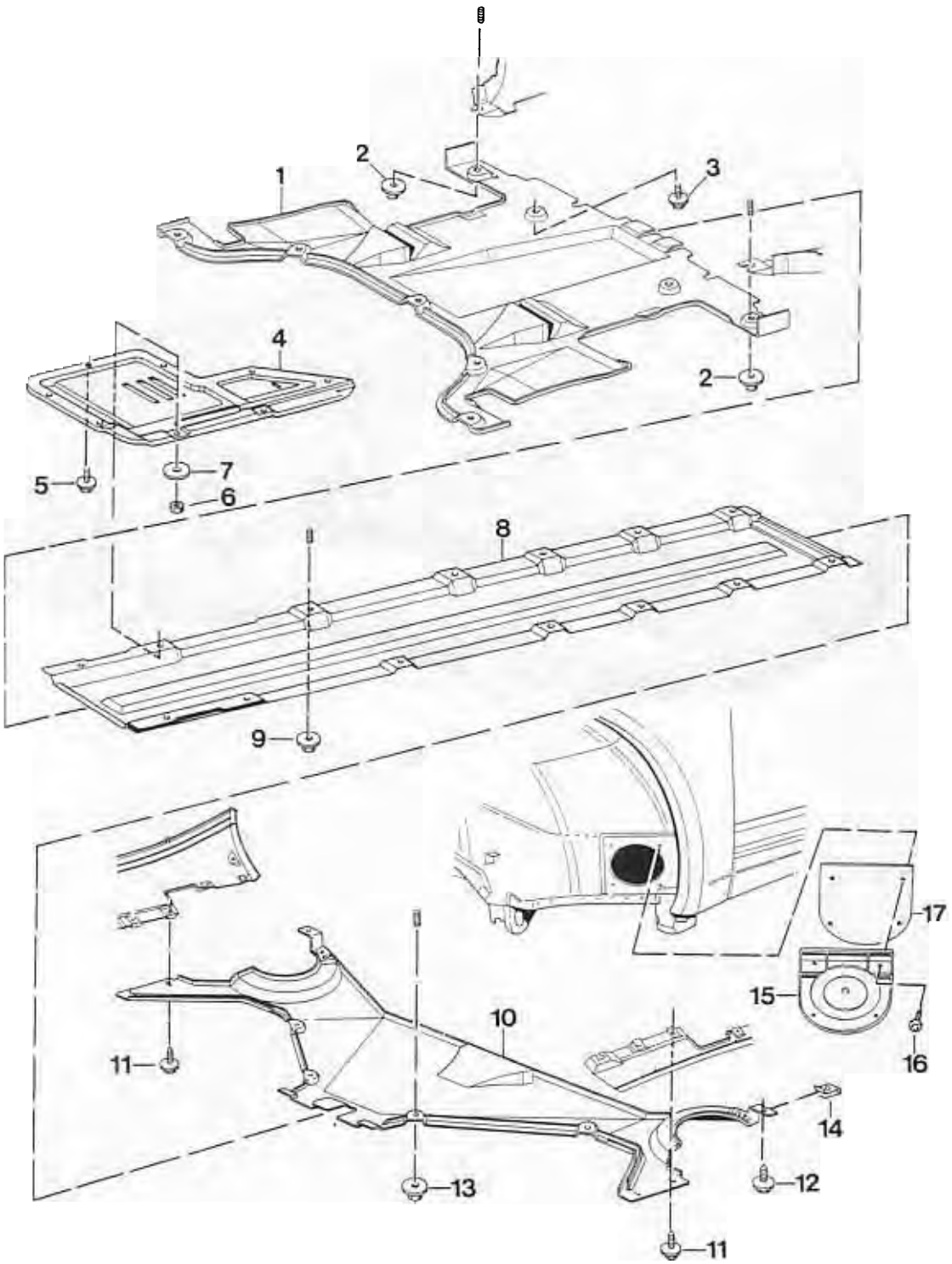

51 90 19 Removing and installing underbody paneling

No.	Designation	Qty.	Note: Removal	Installation
1	Front underbody paneling	1	Detach from center underbody paneling in forward direction	Engage into center underbody paneling in backward direction
2	Plastic nut T 5	7		
3	Screw with washer M 6 x 16 Z2	2		
4	Fuel pump cover	1		
5	Screw with washer M 6 x 12 Z1SB	6		
6	Hexagon head nut M 6	2		
7	Washer A 6.4 x 12.5	2		
8	Center underbody paneling	1	Detach from rear underbody paneling in forward direction	Engage into rear underbody paneling in backward direction
9	Hexagon head nut M 6	12		
10	Rear underbody paneling	1		
11	Screw with washer B 4.8 x 19 Z2	4		
12	Screw with washer M 6 x 16 Z2	4		
13	Hexagon head nut M 6	4		
14	Sheetmetal nut B 4.8	2		Adjust to center of hole

No.	Designation	Qty.	Note: Removal	Installation
15	Cover for muffler opening	2		
16	Self-tapping screw with washer BZ 4.2 x 13 Z2	8		
17	Cover seal	2		Check, replace if required

51 45 55 Replacing outer side member

The following materials and tools are required for the "Replacing outer side member" repair operation:

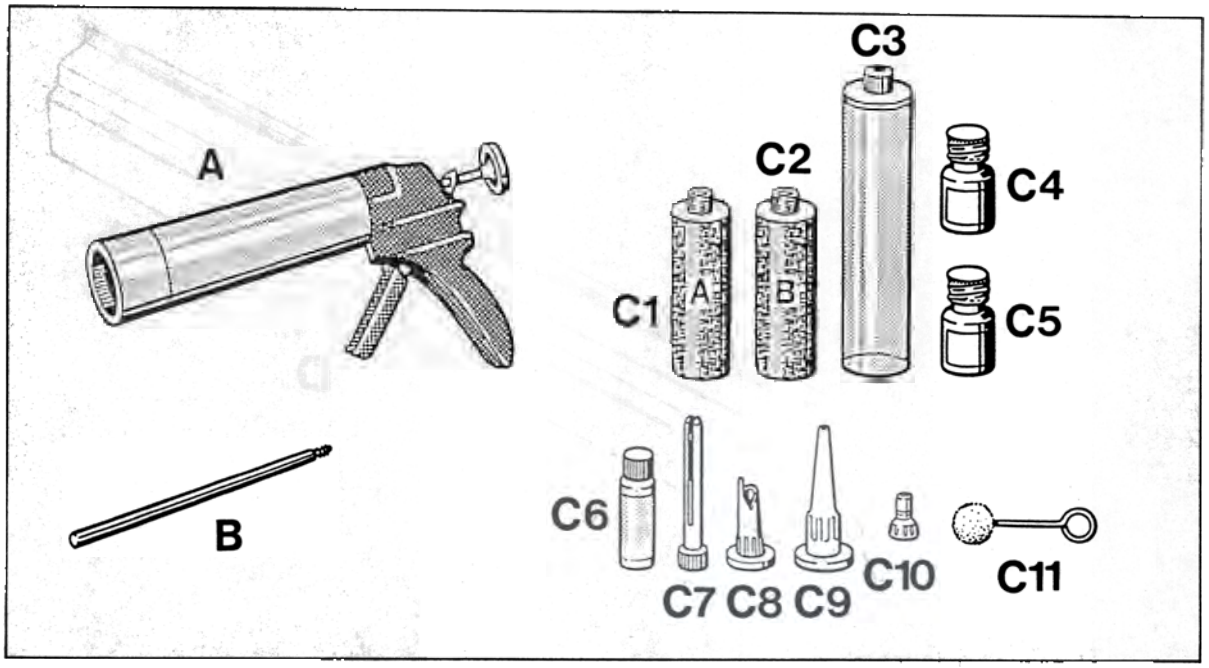

1767-66

A	Bonding gun	VAG 1628	e.g. VW Werk AG KD-Gerätevertrieb
B	Mixing rod 9528	000.721.952.80	Porsche Parts Dept.
C	Bonding set	999.915.509.40	

Bonding set contents:

C 1 = Cartridge component A
C 2 = Cartridge component B
C 3 = Mixing cartridge
C 4 = Primer
C 5 = Activator
C 6 = Cleaning solution
C 7 = Injector nozzle
C 8 = Application nozzle
C 9 = Application nozzle
C 10 = Filling nozzle
C 11 = Touch-in tool

Replacing outer side member

The following body spare part is required for the "Replacing outer side member" repair operation:

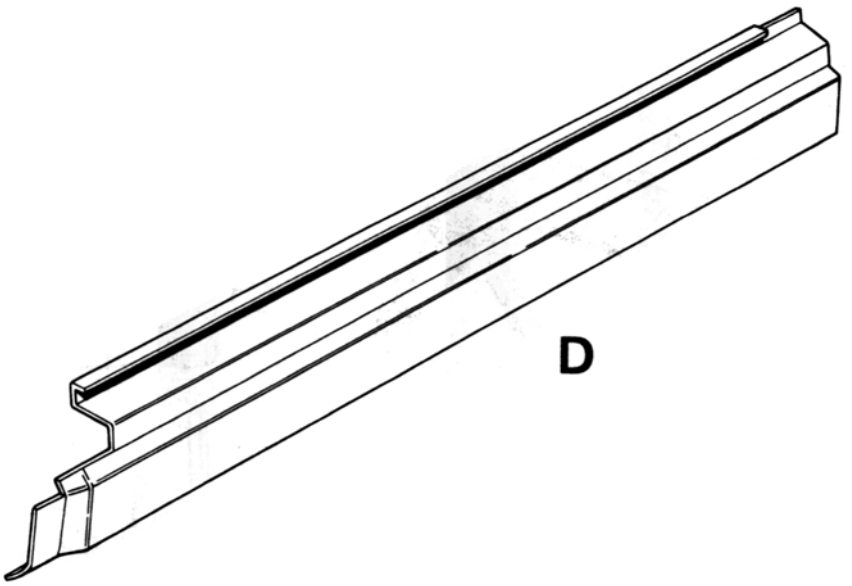

D = Outer side member

Replacing outer side member

Remove all accessories and interior components from the outer side member section as well as the front fender!

No.	Operation	Instructions
1	Cut through outer side member and separate spotwelds	Using a body saw, cut through outer side member ahead of rear side panel. Separate spotwelds between outer side member and center side member, fender mating panel and closing panel with a spotweld cutter.
	Clean welding areas	Use a hot air gun or rotary wire brush to remove paint, underbody sealant etc. from welding areas of body. Remove factory primer from welding areas of spare part with a rotary wire brush.
2	Trial-fit outer side member to body and prepare for fitting	Trial-fit spare outer side member to body side panel. Drill out outer side member along joints with fender mating panel and closing panel for plug welding. Fit outer side member into body and adjust with door contours.
3	Remove outer side member and prepare bonding area	Lift spare outer side member off the body. Clean bonding areas on gusset plate and outer side member for bonding and apply primer.

Preparing the bonding cartridge for application of adhesive

No.	Operation	Instructions
4	Open nozzle fitting of cartridge containing component A	Use a screwdriver to pierce the diaphragm of the nozzle fitting of the cartridge containing component A (C1).
5	Open flanged cover of cartridge containing component A	Use the screwdriver handle to pierce the flanged cover at the end of the cartridge containing component A (C1).
6	Screw filling nozzle onto cartridge containing component A	Screw filling nozzle (C10) onto cartridge containing component A (C1).
7	Place cartridge containing component A into bonding gun	Place cartridge containing component A (C1) into bonding gun (A). Remove screw-on cap of mixing cartridge (C3).
8	Press component A into mixing cartridge	Insert filling nozzle (C10) of cartridge containing component A (C1) into mixing cartridge (C3). Use bonding gun (A) to press component A into mixing cartridge (C3).
9	Open nozzle fitting of cartridge containing component B	Use a knife to cut off the tip of the nozzle fitting of the cartridge containing component B (C2).
10	Screw injector nozzle onto cartridge containing component B	Screw injector nozzle (C7) onto cartridge containing component B (C2).
11	Place cartridge containing component B into bonding gun	Place cartridge containing component B (C2) into bonding gun (A).

No.	Operation	Instructions
12	Press component B into mixing cartridge with component A	Insert injector nozzle (C7) of cartridge containing component B (C2) into mixing cartridge (C3). Use the bonding gun (A) to press component B (C2) into mixing cartridge (C3) containing component A.
13	Close mixing cartridge	Pull injector nozzle (C7) out of mixing cartridge (C3) and close mixing cartridge with screw-on cap.
14	Screw mixing rod into mixing cartridge	Screw mixing rod (B) **manually** into internal threads of mixing disc of mixing cartridge (C3). Clamp other end of mixing rod in a power drill chuck. Fit the power drill in a suitable clamping device.
15	Mix component A und component B	Switch on drill (speed 900 - 1200 rpm) and move mixing cartridge 25 times from stop zu stop. **Perform all 25 double strokes fairly rapidly!**
16	Engage mixing disc into piston	Pull back mixing cartridge until a rattling sensation is felt. Switch off drill und unscrew mixing rod from mixing cartridge. This will cause the mixing disc to engage into the piston of the mixing cartridge.
17	Place mixing cartridge into bonding gun	Place mixing cartridge with mixed 2-pack adhesive into bonding gun. Screw application nozzle (C8) onto mixing cartridge.

Caution: Observe open time of 15 minutes!

Open time is the time available for application of the adhesive and for fitting the outer side member to the body.

No.	Operation	Instructions
18	Apply adhesive to the gusset plate	Apply 2-pack adhesive with the bonding gun to the entire gusset plate surface to a thickness of 4 mm. Do not apply any adhesive in the outer side member to side panel welding area.
19	Fit outer side member and weld into place	Fit outer side member into body and adjust according to door contours. MIG-weld spare outer side member to body side panel, running a butt full seam. Plug-weld outer side member, fender mating panel and closing panel using MIG equipment. Spotweld outer side member to center side member and inner side member.

51 48 55 Replacing center side member

The following tools and materials are required for the "Replacing center side member" repair operation:

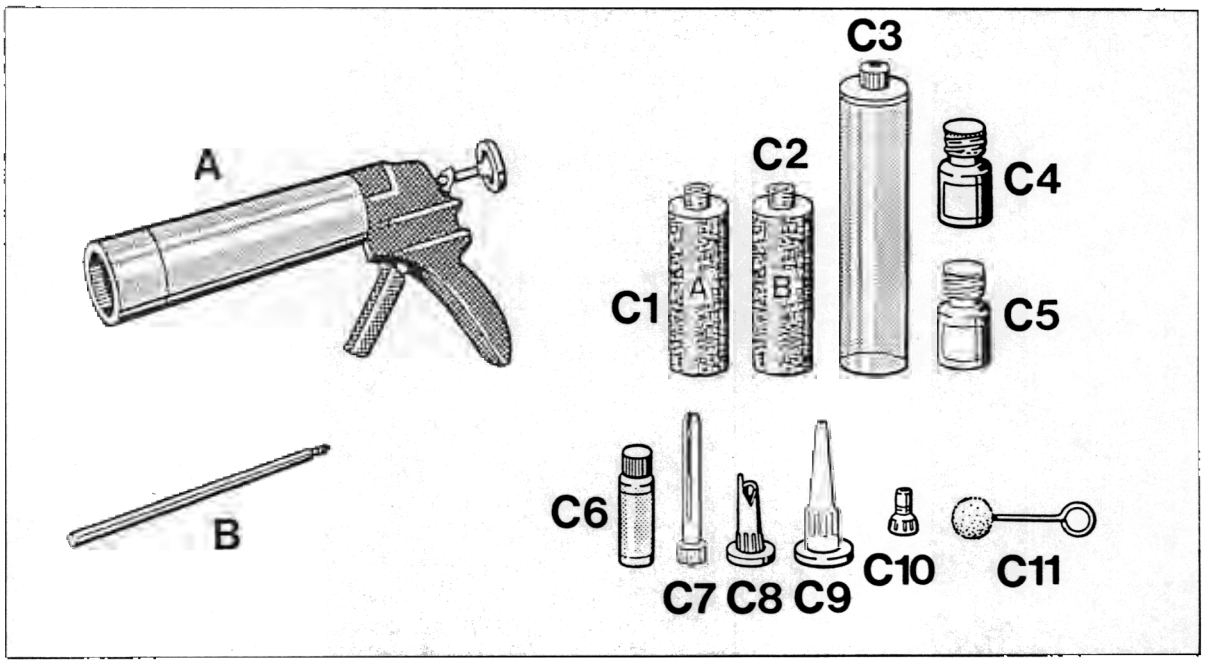

A	Bonding gun	VAG 1628	e.g. VW Werk AG KD-Gerätevertrieb
B	Mixing rod 9528	000.721.952.80	Porsche Parts Dept.
C	Bonding set	999.915.509.40	

Bonding set contents:

C 1 = Cartridge component A
C 2 = Cartridge component B
C 3 = Mixing cartridge
C 4 = Primer
C 5 = Activator
C 6 = Cleaning solution
C 7 = Injector nozzle
C 8 = Application nozzle
C 9 = Application nozzle
C 10 = Filling nozzle
C 11 = Touch-in tool

Replacing center side member

The following body spare parts are required for this sectional repair.

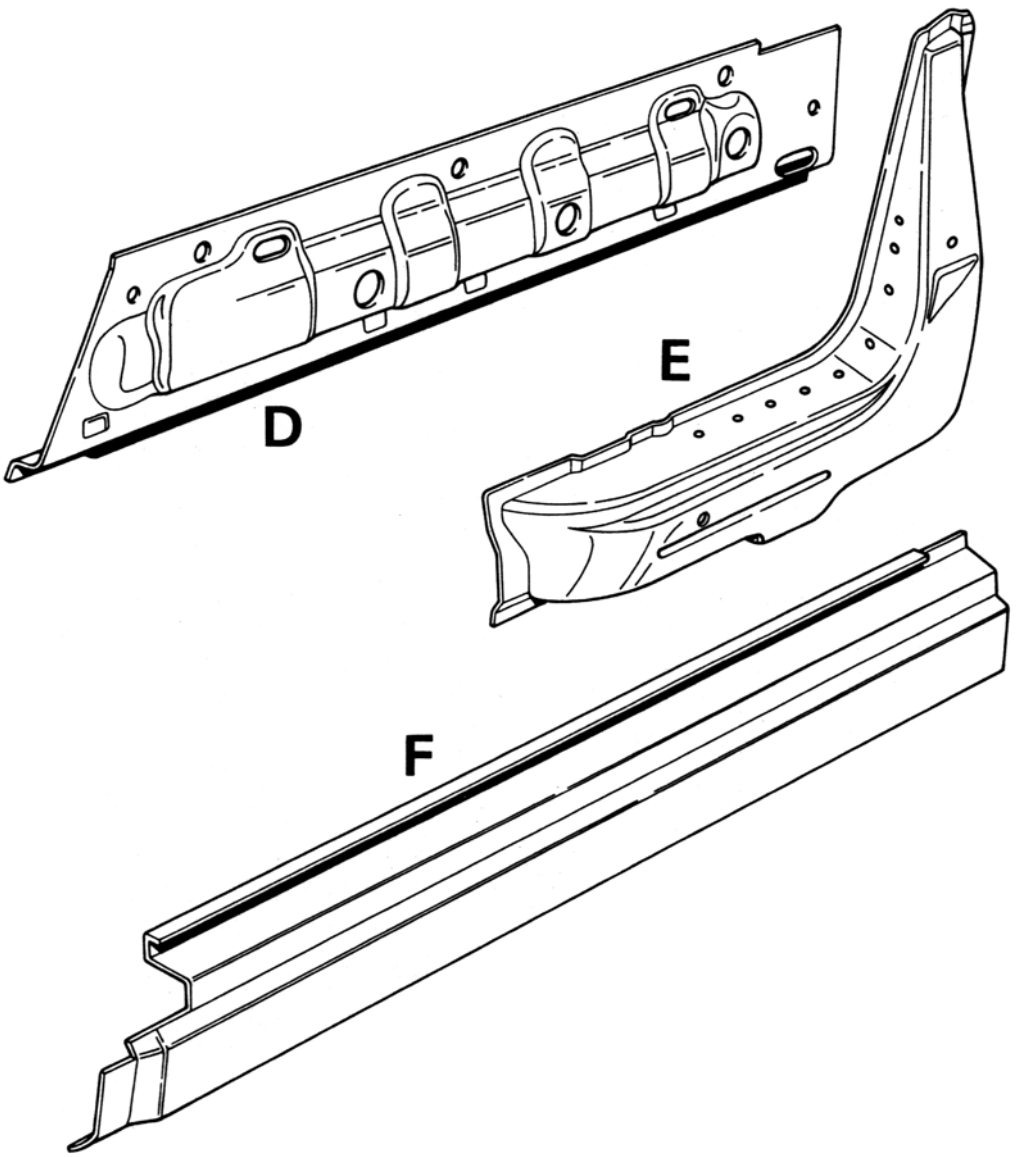

D = Center side member
E = Gusset plate
F = Outer side member

Replacing center side member

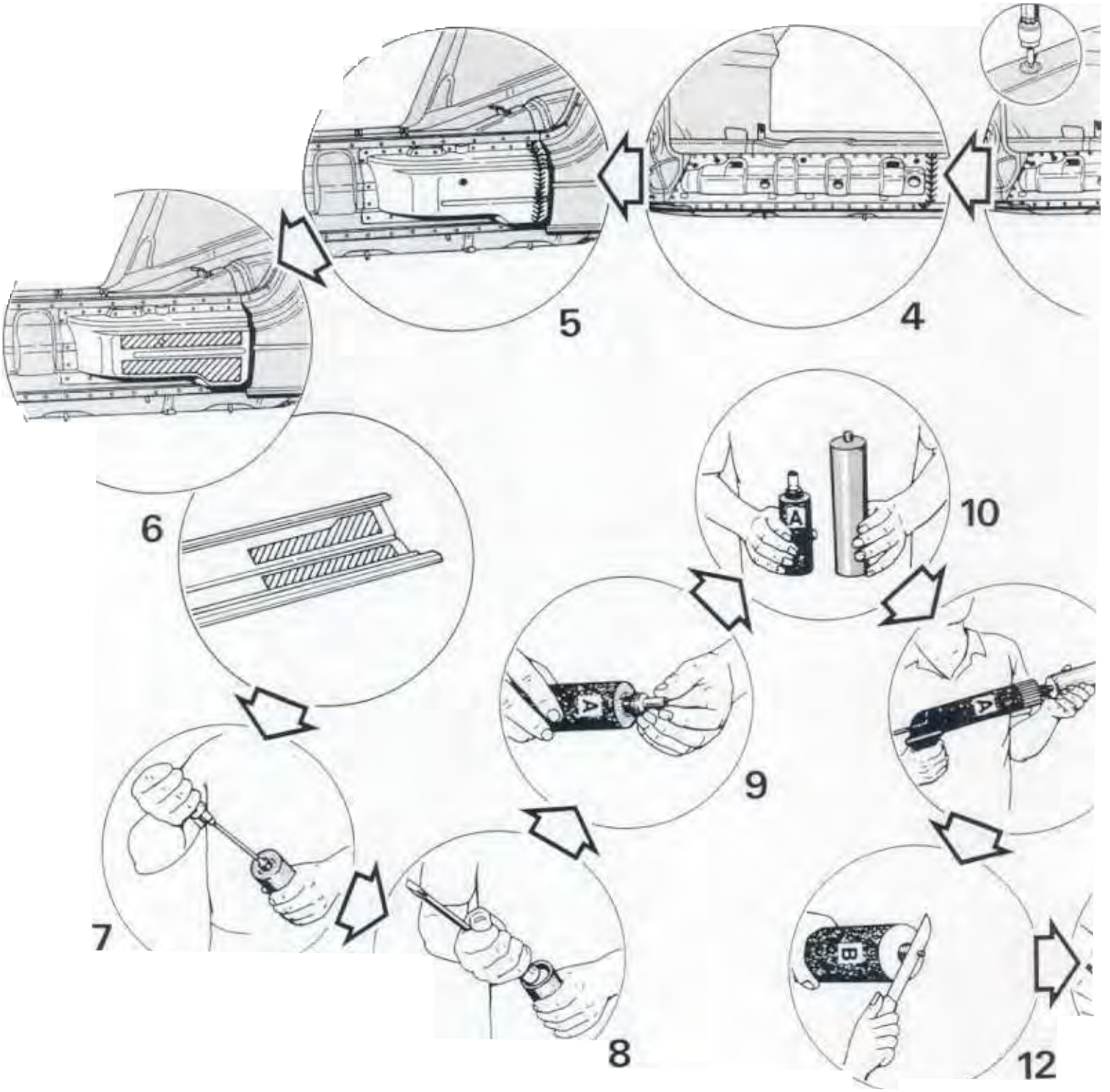

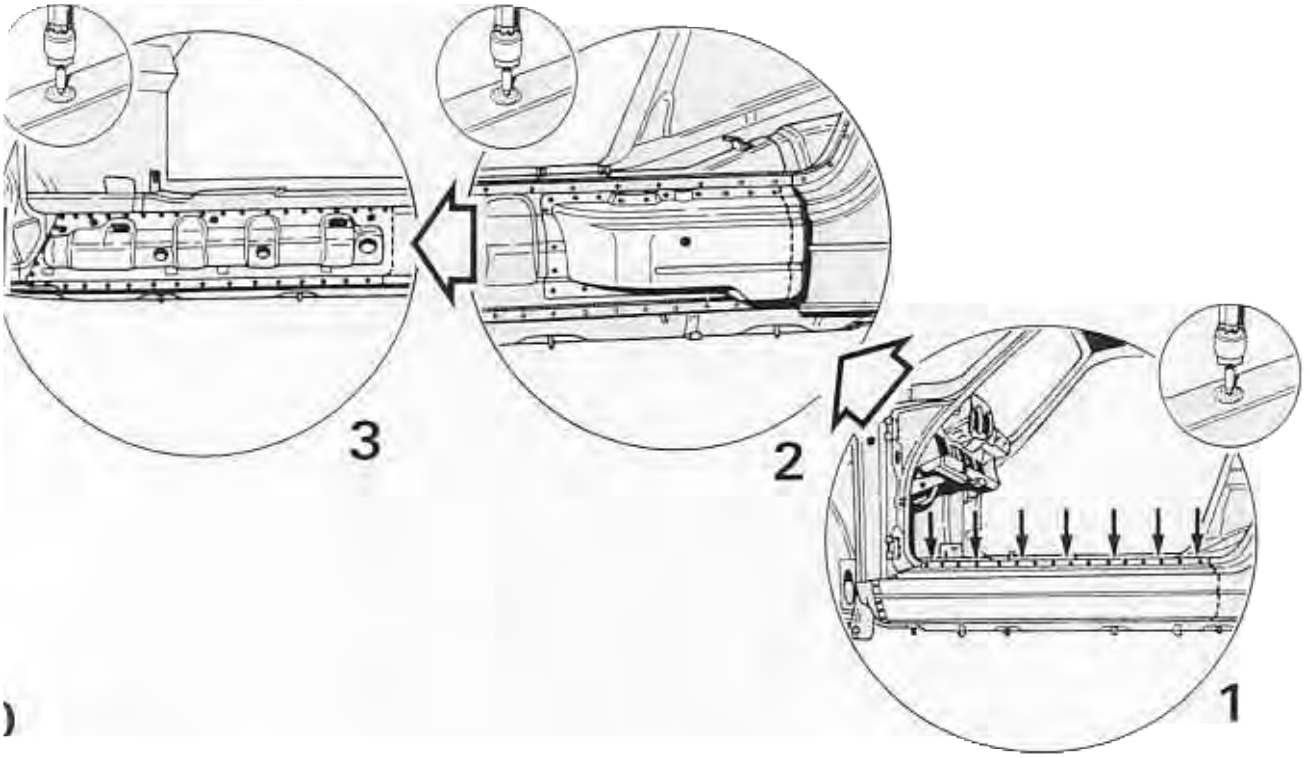
3
2
1

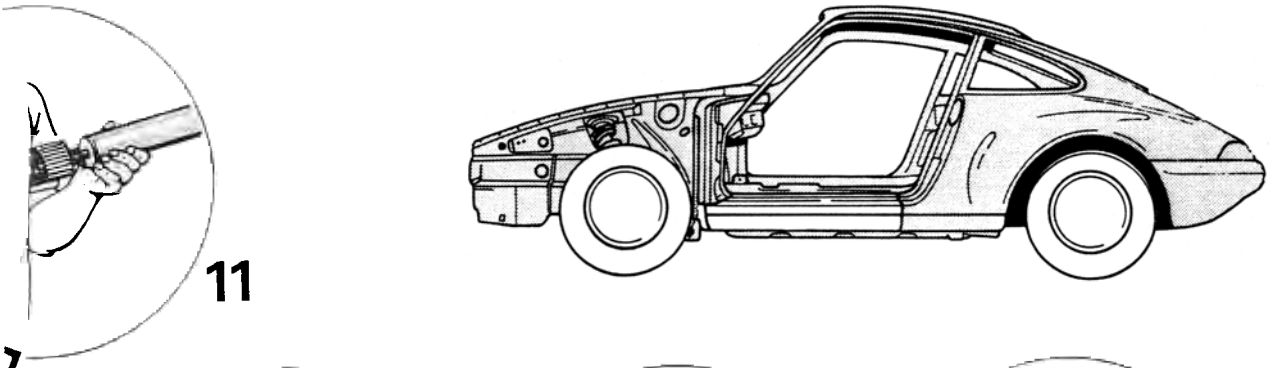
11

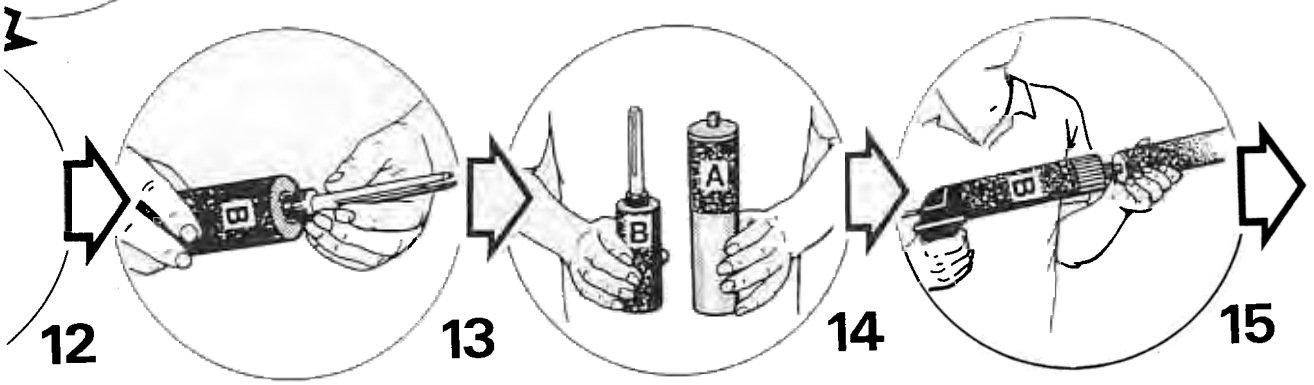
B
B
A
B
12
13
14
15

Replacing center side member

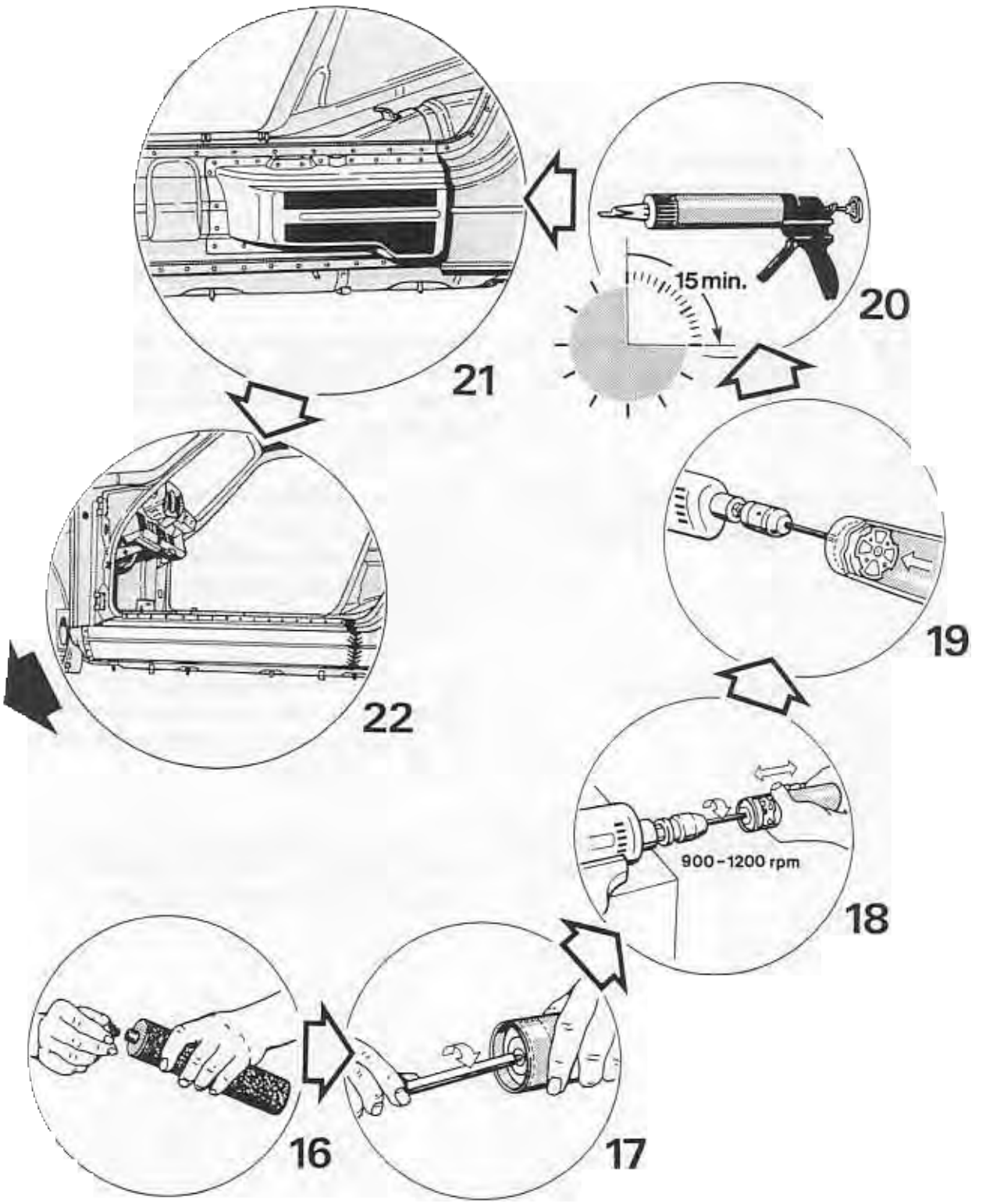

Replacing center side member

Remove all accessories and interior components from the center body section as well as the front fender!

No.	Operation	Instructions
	Cut through outer side member and separate spotwelds	Cut through outer side member ahead of rear side panel using a body saw; use a spotweld cutter to separate spotwelds between outer side member and center side member, inner side member, floorpan, fender mating panel and closing panel.
2	Cut through gusset plate and separate spotwelds	Cut through gusset plate ahead of rear side panel using a body saw. Separate spotwelds between gusset plate and center side member as well as side panel using a spotweld cutter.
3	Cut through center side member and separate spotwelds	Cut through center side member ahead of rear side panel using a body saw. Separate spotwelds between center side member and floorpan, inner side member as well as front side panel using a spotweld cutter
	Clean welding areas	Use a hot air gun or rotary wire brush to remove underbody sealant, paint etc. from welding areas of body. Remove factory primer from spare part welding areas with a rotary wire brush.
	Trial-fit center side member into body and prepare for fitting	Trial-fit spare center side member to body center side member, making a butt joint. Drill center side member at joints to front side panel for plug welding.

No.	Operation	Instructions
4	Weld in center side member	Use clamping tools to attach spare center side member and MIG-weld to body center side member running a butt full seam. Plug weld center side member to front side panel using MIG equipment. Spotweld center side member to floorpan and inner side member.
5	Trial-fit gusset plate, prepare for fitting and weld into place	Trial-fit spare gusset plate to body gusset plate, making a butt joint. Drill gusset plate at joints to center side member for plug welding. MIG-weld spare gusset plate to body gusset plate, running a butt full seam. Plug weld gusset plate to center side member, using MIG equipment.
	Trial-fit outer side member to body and prepare for fitting	Trial-fit spare outer side member to outer side member, making a butt joint. Drill outer side member at joints to fender mating panel and closing panel for plug welding.
Preparing the bonding cartridge for application of adhesive		
6	Prepare bonding areas	Clean bonding areas of gusset plate and outer side member for bonding and apply primer.
7	Open nozzle fitting of cartridge containing component A	Use a screwdriver to pierce the diaphragm in the nozzle fitting of the cartridge containing component A (C1).
8	Open flanged cover of cartridge containing component A	Use the screwdriver handle to pierce the flanged cover at the end of the cartridge containing component A (C1).
9	Screw filling nozzle onto cartridge containing component A	Screw filling nozzle (C10) onto cartridge containing component A (C1).
10	Place cartridge containing component A into bonding gun	Place cartridge containing component A (C1) into bonding gun (A). Remove screw-on cap from mixing cartridge (C3).

No.	Operation	Instructions
	Press component A into mixing cartridge	Engage filling nozzle (C10) of cartridge containing component A (C1) into mixing cartridge (C3). Use bonding gun (A) to press component A into mixing cartridge (C3).
12	Open nozzle fitting of cartridge containing component B	Use a knife to cut off the tip of the nozzle fitting of the cartridge containing component B (C2).
13	Screw injector nozzle onto cartridge containing component B	Screw injector nozzle (C7) onto cartridge containing component B (C2).
14	Place cartridge containing component B into bonding gun	Place cartridge containing component B (C2) into bonding gun (A).
15	Press component B into mixing cartridge with component A	Insert injector nozzle (C7) of cartridge containing component B (C2) into mixing cartridge (C3). Use the bonding gun (A) to press component B (C2) into mixing cartridge (C3) with component A.
16	Close mixing cartridge	Pull injector nozzle (C7) out of mixing cartridge (C3) and close mixing cartridge with screw-on cap.
17	Screw mixing rod into mixing cartridge	Screw mixing rod (B) **manually** into internal threads of mixing disc of mixing cartridge (C3). Clamp the other end of the mixing rod in a power drill chuck. Fit the power drill in a suitable clamping device.
18	Mix component A and component B	Switch on drill (speed 900 - 1200 rpm) and move mixing cartridge 25 times from stop to stop. **Perform all 25 double strokes fairly rapidly!**

No.	Operation	Instructions
19	Engage mixing disc into piston	Pull back mixing cartridge until a rattling sensation is felt. Switch off drill and screw mixing rod out of mixing cartridge. This causes the mixing disc to engage into the piston of the mixing cartridge.
20	Place mixing cartridge into bonding gun	Place mixing cartridge with mixed 2-pack window adhesive into bonding gun. Screw application nozzle (C8) onto mixing cartridge.

Caution: Observe open time of 15 minutes!

Open time is the time available for application of the adhesive and for fitting the outer side member into the body

21	Apply adhesive to gusset plate	Apply 2-pack adhesive with bonding gun to entire gusset plate surface to a thickness of 4 mm. Do not apply any adhesive to the outer side member to side panel welding area.
22	Weld in outer side member	Fit outer side member to body and adjust to contours of door. MIG-weld spare outer side member to body outer side member running a butt full seam. Plug-weld outer side member to fender mating panel and closing panel using MIG equipment. Spotweld outer side member to inner side member and center side member (floorpan).
	Grind down butt weld seam	

51 73 55 Replacing floorpan

The following materials and tools are required for the "Replacing floorpan" repair operation:

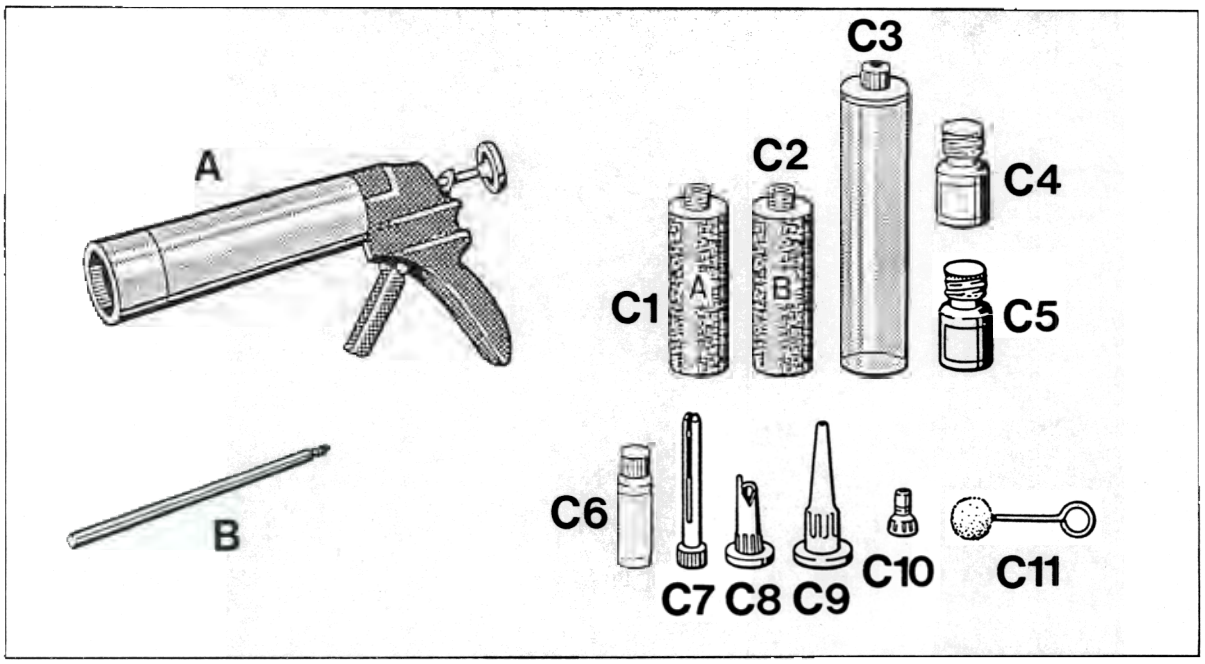

A	Bonding gun	VAG 1628	e.g. VW Werk AG KD-Gerätevertrieb
B	Mixing rod 9528	000.721.952.80	Porsche Parts Dept.
C	Bonding set	999.915.509.40	

Bonding set contents:

C 1 = Cartridge component A
C 2 = Cartridge component B
C 3 = Mixing cartridge
C 4 = Primer
C 5 = Activator
C 6 = Cleaning solution
C 7 = Injector nozzle
C 8 = Application nozzle
C 9 = Application nozzle
C 10 = Filling nozzle
C 11 = Touch-in tool

Replacing floorpan

The following body spare parts are required for this sectional repair:

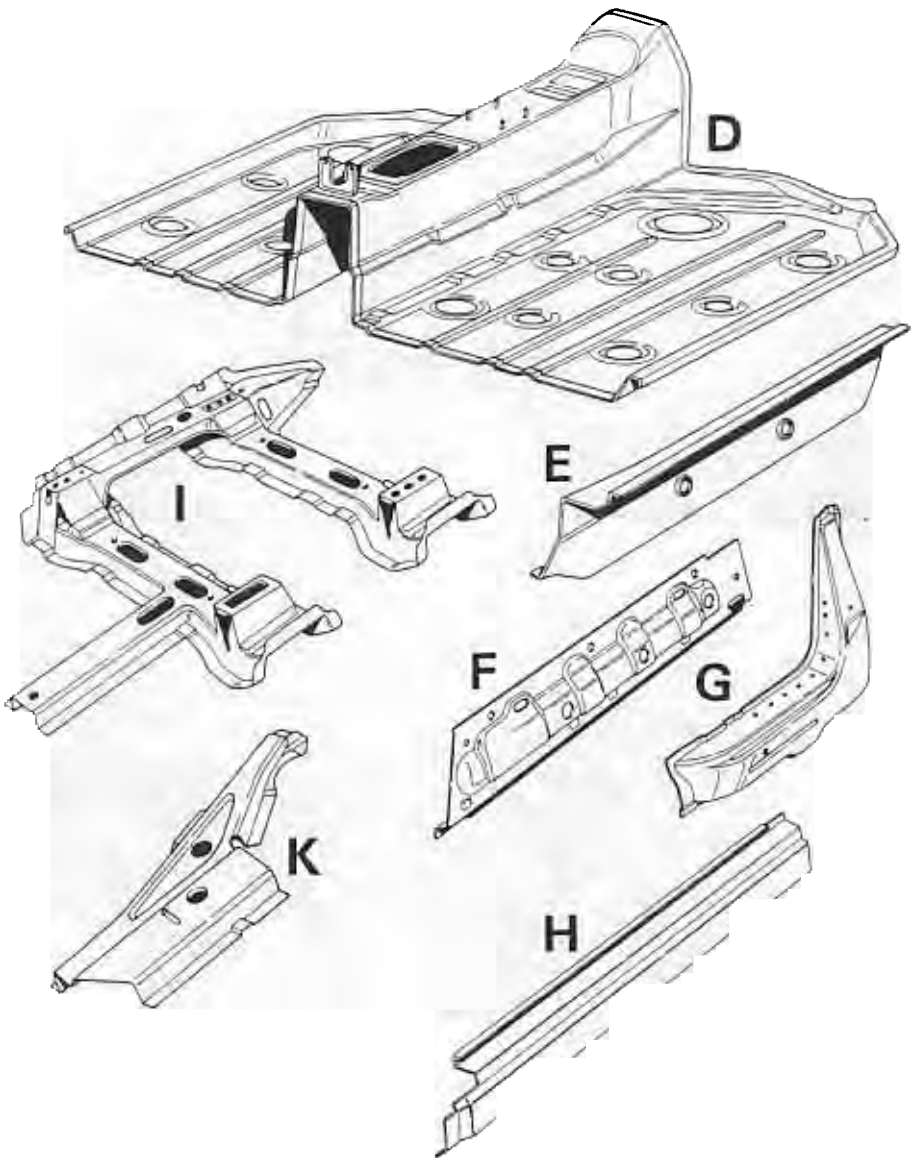

D = Floorpan
E = Inner side member
F = Center side member
G = Gusset plate
H = Outer side member
I = Seat base
K = Front floor bracing plate

Replacing floorpan

Cutting outer side member, center side member, inner side member and floorpan partially out of body

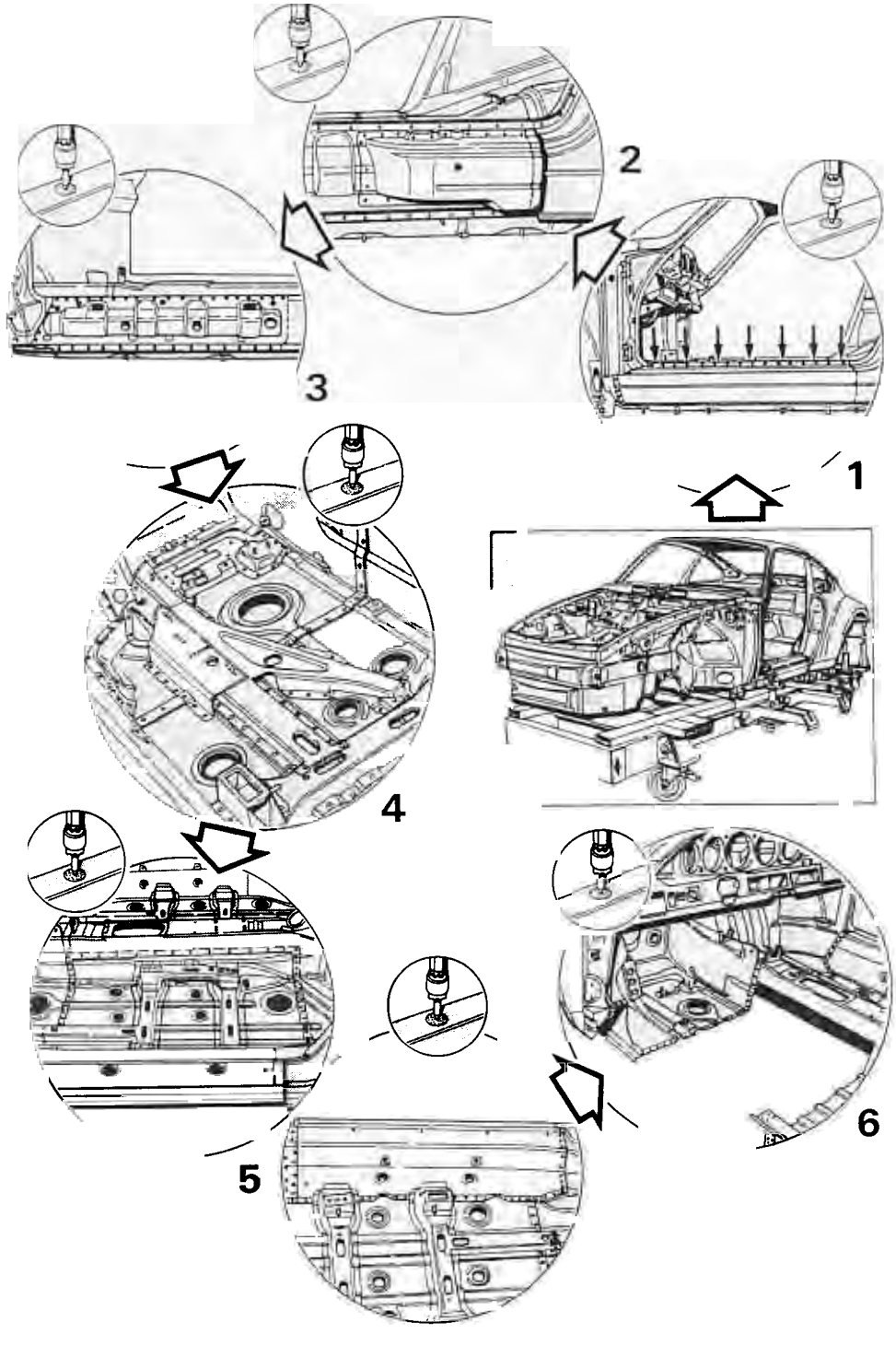

Replacing floorpan

Fitting parts of outer side member, center side member, inner side member and floorpan into body

Replacing floorpan

Cutting outer side member, center side member, inner side member and floorpan partially out of body

Remove all ancillaries and accessories, including interior trim, from the center body section as well as the front fender !

No.	Operation	Instructions
	Place vehicle onto bench-type straightening equipment	Place vehicle onto straightening attachment set – **not the economy set** –.
1	Cut through outer side member and separate spotwelds	Cut through outer side member ahead of rear side panel using a body saw. Separate spotwelds between outer side member and inner side member, center side member, fender mating panel as well as closing panel using a spotweld cutter.
2	Cut through gusset plate and separate spotwelds	Cut through gusset plate ahead of rear side panel with a body saw. Separate spotwelds between gusset plate and center side member as well as side panel using a spotweld cutter.
3	Cut through center side member and separate spotwelds	Cut through center side member ahead of rear side panel using a body saw. Separate spotwelds between center side member and floorpan, inner side member as well as front side panel with a spotweld cutter.
4	**Left-hand drive only :** Separate weld seams of floor bracing panel	Separate spotwelds between bracing panel and front body floow with a spotweld cutter. Grind down MIG weld seams between bracing panel, seat base and extension.
5	Cut through inner side member, floorpan and tunnel. Separate weld joints	Cut through inner side member ahead of rear side rail, rear floorpan behind seat base and floorpan next to tunnel with a body saw. Grind off MIG weld seam between seat base and extension. Separate spotwelds between inner side member and front side rail, between center of floorpan and front floorpan as well as between center of tunnel and front of tunnel with a spotweld cutter.
6	Separate spotwelds of inner side member /rear side rail	Separate spotwelds between inner side member and rear side rail with a spotweld cutter. Lift out remaining inner side member.

Replacing floorpan

Fitting parts of outer side member, center side member, inner side member and floorpan into body

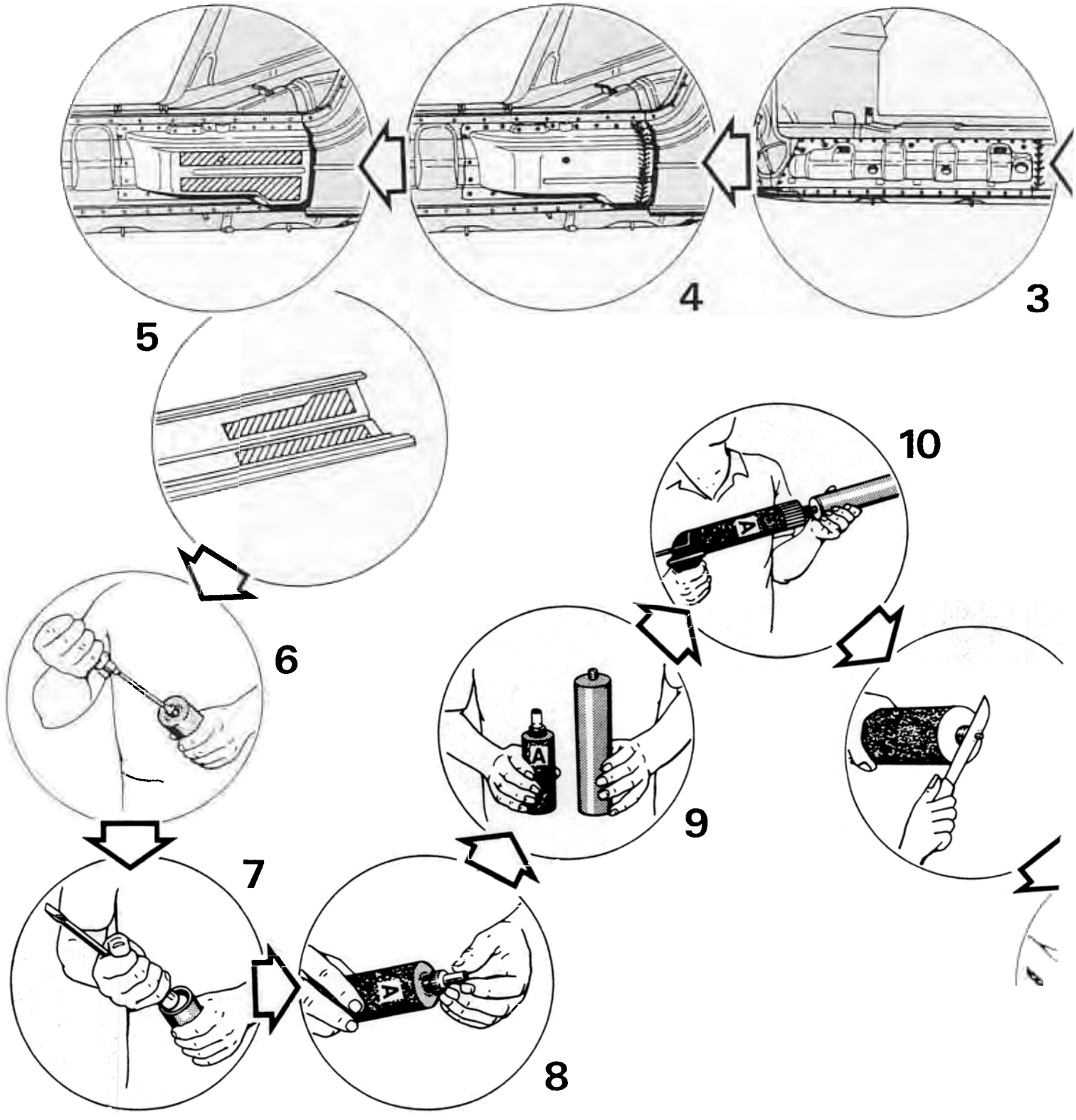

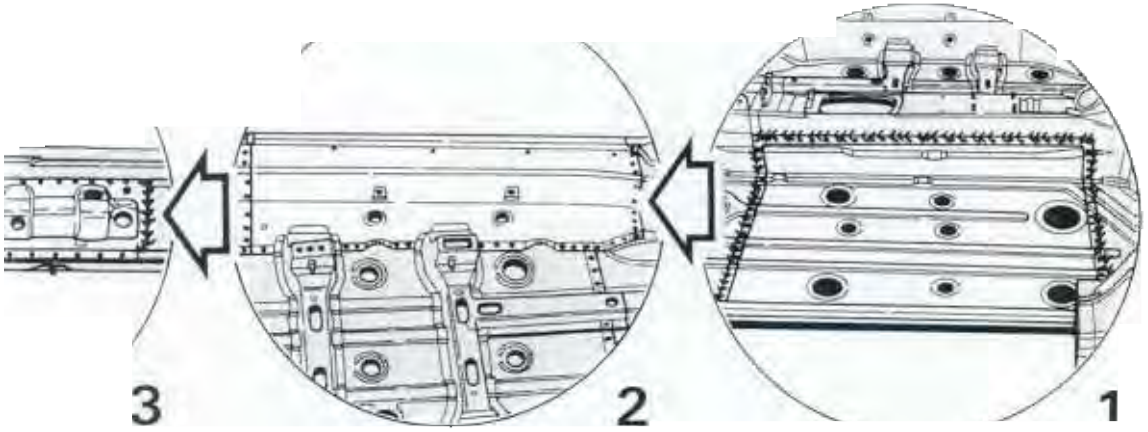
3
2
1

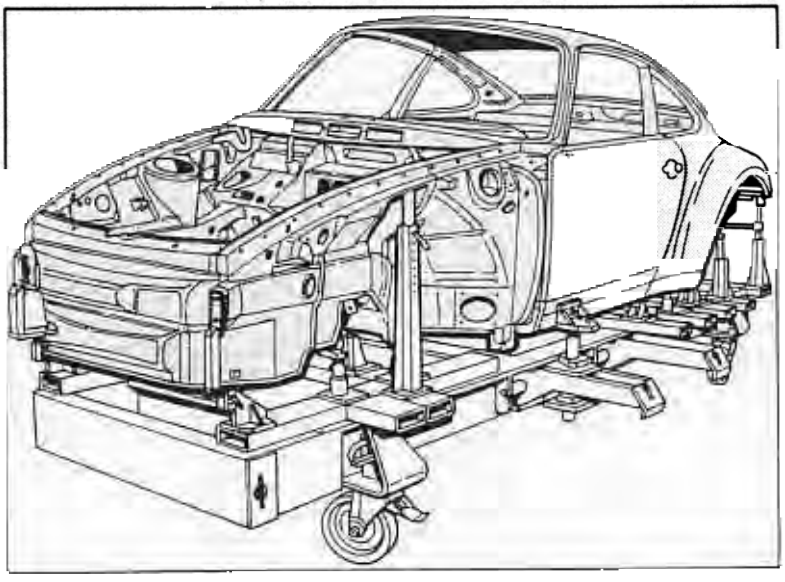

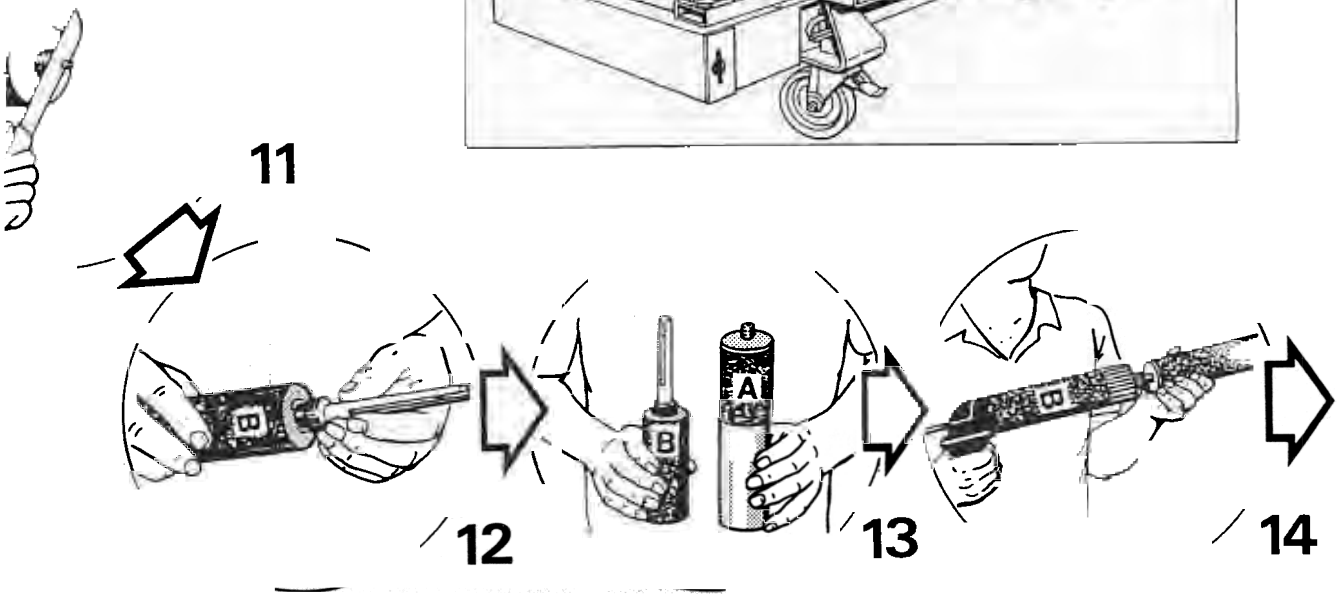
11
B
12
B
A
13
B
14

Replacing floorpan

Fitting parts of outer side member, center side member, inner side member and floorpan into body

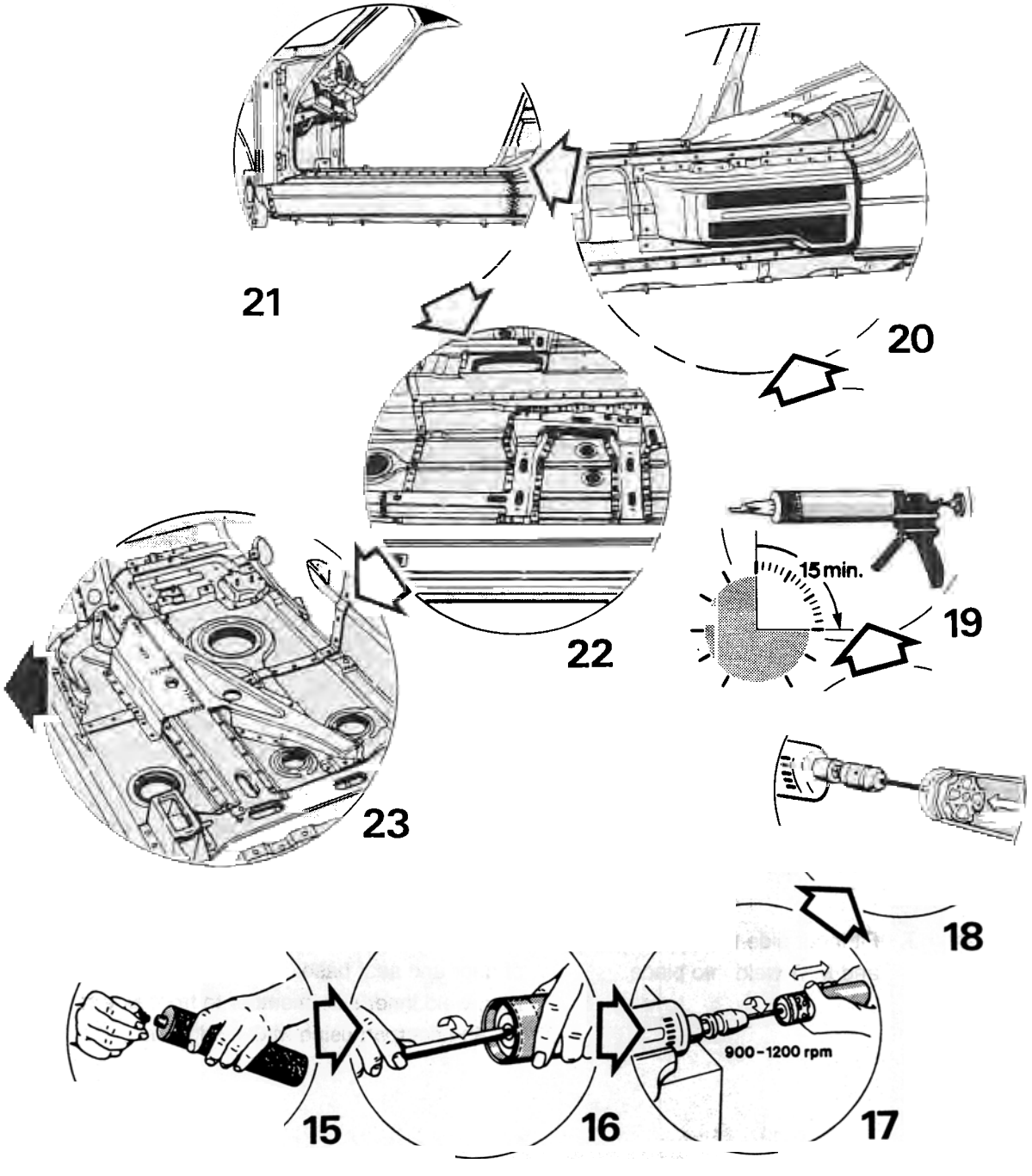

Replacing floorpan

Fitting parts of outer side member, center side member, inner side member and floorpan into body

No.	Operation	Instructions
	Carry out straightening operations and adjust body with straightening brackets	Carry out all straightening operations on the body. Adjust body with straightening brackets. Refit door to check body contours. The gap between door and body must be parallel along its entire circumference.
	Clean welding areas	Use a hot air gun or rotary wire brush to remove underbody sealant, paint etc. from welding areas of body. Use a rotary wire brush to remove factory primer from welding areas of spare parts.
	Trial-fit floorpan into body and prepare for welding in	Trial-fit spare floorpan in mating areas with rear floorpan and tunnel into body, making an overlap joint. Joddle spare floorpan towards inside in these areas. Drill spare floorpan for plug welding.
	Weld floorpan into body	Locate floorpan with clamping tools. Plug weld spare floorpan to rear floorpan, tunnel and front floorpan with MIG equipment. MIG-weld overlapping areas between spare floorpan and rear floorpan, tunnel and front floorpan with an intermittent full seam.
	Prepare inner side member for trial-fitting into body	Drill inner side member at joints with front side rail and floorpan for plug welding.
2	Fit inner side member to body and MIG-weld into place	Fit inner side member into body and adjust to contours of door and seat base. Plug-weld inner side member to front side rail, rear side rail and floorpan using MIG equipment.

No.	Operation	Instructions
	Trial-fit center side member to body and prepare for fitting	Trial-fit spare center side member to body center side member, making a butt joint. Drill center side member at joints with front side panel for plug welding.
3	Weld in center side member	Attach spare center side member with clamping tools and MIG-weld to body center side member, running a butt full seam. Plug weld center side member to front side panel using MIG equipment. Spotweld center side member to floorpan and inner side member.
4	Trial-fit gusset plate, prepare for fitting and weld into place	Trial-fit spare gusset plate to body gusset plate, making a butt joint. Drill gusset plate at joints with center side member for plug welding. MIG-weld spare gusset plate to body gusset plate, running an intermittent full seam. Plug-weld gusset plate to center side member, using MIG equipment.
	Trial-fit outer side member to body and prepare for fitting	Trial-fit spare outer side member to body outer side member, making a butt joint. Drill outer side member at joints with fender mating line, closing panel and center side member for plug welding.
5	Prepare bonding areas	Prepare bonding areas at gusset plate and outer side member for bonding and apply primer.

Preparing the bonding cartridge for application of adhesive

No.	Operation	Instructions
6	Open nozzle fitting of cartridge containing component A	Use a screwdriver to pierce the diaphragm in the nozzle fitting of the cartridge containing component A (C1).
7	Open flanged cover of cartridge containing component A	Use the screwdriver handle to pierce the flanged cover at the end of the cartridge with component A (C1).
8	Screw filling nozzle onto cartridge containing component A	Screw filling nozzle (C10) onto cartridge containing component A (C1).
9	Place cartridge containing component A into bonding gun	Place cartridge containing component A (C1) into bonding gun (A). Remove screw-on cap from mixing cartridge (C3).
10	Press component A into mixing cartridge	Insert filling nozzle (C10) of cartridge containing component A (C1) into mixing cartridge (C3). Use Bonding gun (A) to press component A into mixing cartridge (C3).
11	Open nozzle fitting of cartridge containing component B	Use a knife to cut off the tip of the nozzle fitting of the cartridge containing component B (C2).
12	Screw injector nozzle onto cartridge containing component B	Screw injector nozzle (C7) onto cartridge containing component B (C2).
13	Place cartridge containing component B into bonding gun	Place cartridge containing component B (C2) into bonding gun (A).
14	Press component B into mixing cartridge with component A	Engage injector nozzle (C7) of cartridge containing component B (C2) into mixing cartridge (C3). Use the bonding gun (A) to press component B (C2) into mixing cartridge (C3) with component A.

No.	Operation	Instructions
15	Close mixing cartridge	Pull injector nozzle (C7) out of mixing cartridge (C3) and close mixing cartridge with screw-on cap.
16	Screw mixing rod into mixing cartridge	Screw mixing rod (B) **manually** into internal threads of mixing disc in mixing cartridge (C3). Clamp the other end of the mixing rod in a power drill chuck. Fit the power drill in a suitable clamping device.
17	Mix component A and component B	Switch on drill (speed 900 - 1200 rpm) and move mixing cartridge 25 times from stop zu stop. **Perform all 25 double strokes fairly rapidly!**
18	Engage mixing disc into piston	Pull back mixing cartridge until a rattling sensation is felt. Switch off drill and unscrew mixing rod from mixing cartridge. This causes the mixing disc to engage into the piston of the mixing cartridge.
19	Place mixing cartridge into bonding gun	Insert mixing cartridge with mixed 2-pack window adhesive into bonding gun. Screw application nozzle (C8) onto mixing cartridge.

Caution: Observe open time of 15 minutes!

Open time is the time available for application of the adhesive and for fitting the outer side member into the body.

No.	Operation	Instructions
20	Apply adhesive to gusset plate	Use bonding gun to apply 2-pack adhesive to entire gusset plate surface to a thickness of 4 mm. Do not apply any adhesive to outer side member to rear side panel welding area.
21	Weld in outer side member	Fit outer side member into body and align with door contours. MIG-weld spare outer side member to body outer side member, running a butt full seam. Plug weld outer side member to center side member, fender mating panel and closing panel, using MIG equipment. Spot-weld outer side member to inner side member and center side member.
	Grind down butt weld seam	
22	Prepare seat base for trial fitting and weld in place	Drill seat base at spotweld flanges for plug welding. Plug weld seat base to floorpan, tunnel and inner side member using MIG equipment. MIG-weld seat base complete with extension, running an intermittent full seam.
23	Only LHD vehicles, left side Trial-fit front floorpan bracing plate and weld into place	Trial-fit front floorpan bracing plate, MIG plug weld to front floor pan, MIG-weld to seat base front end extension, running a full seam.

51 03 55 Replacing part of roof panel

The following special tools and body spare parts are required for the "Replacing part of roof panel" repair operation

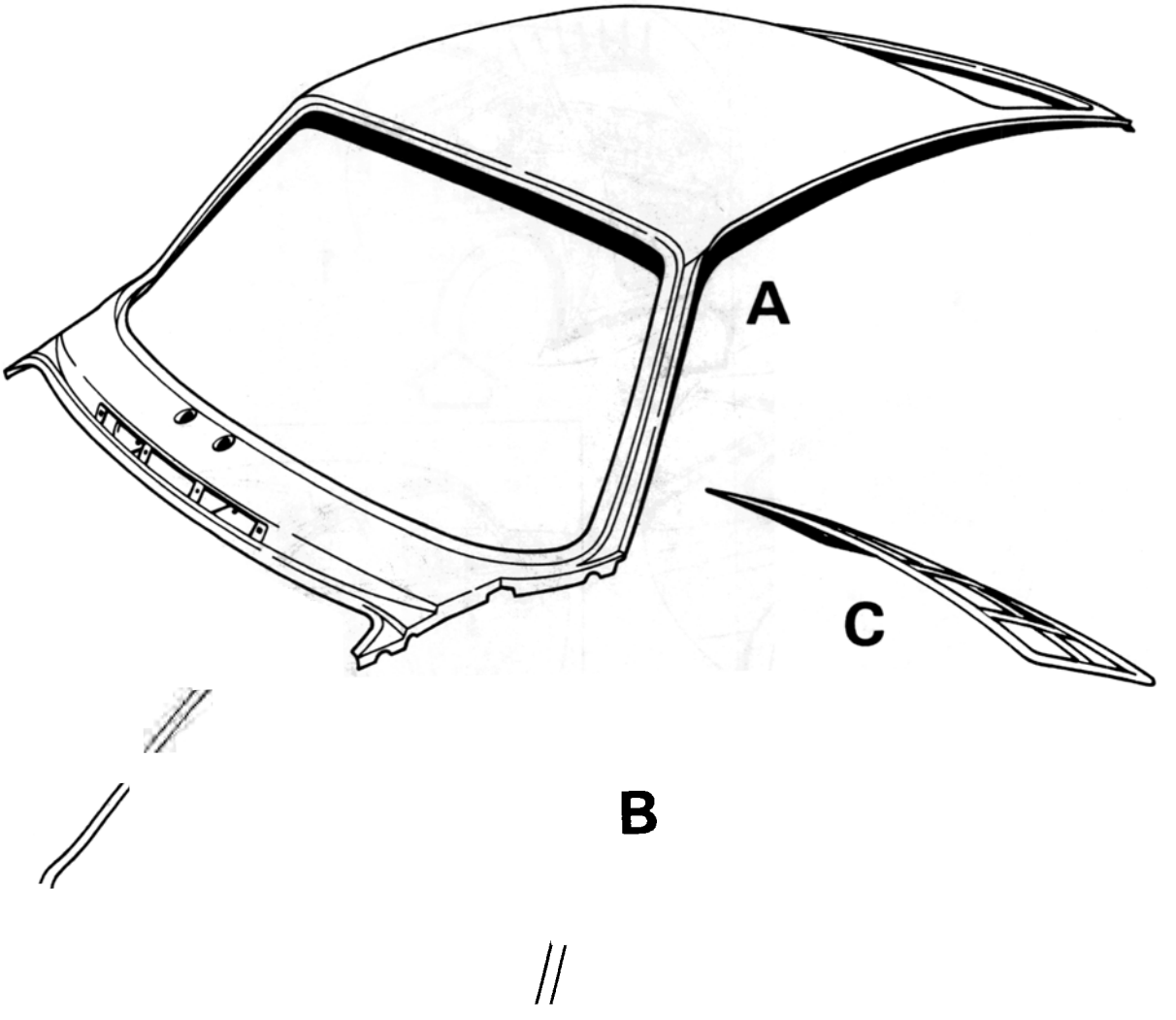

Replacing part of roof panel

Cutting roof partially out of body

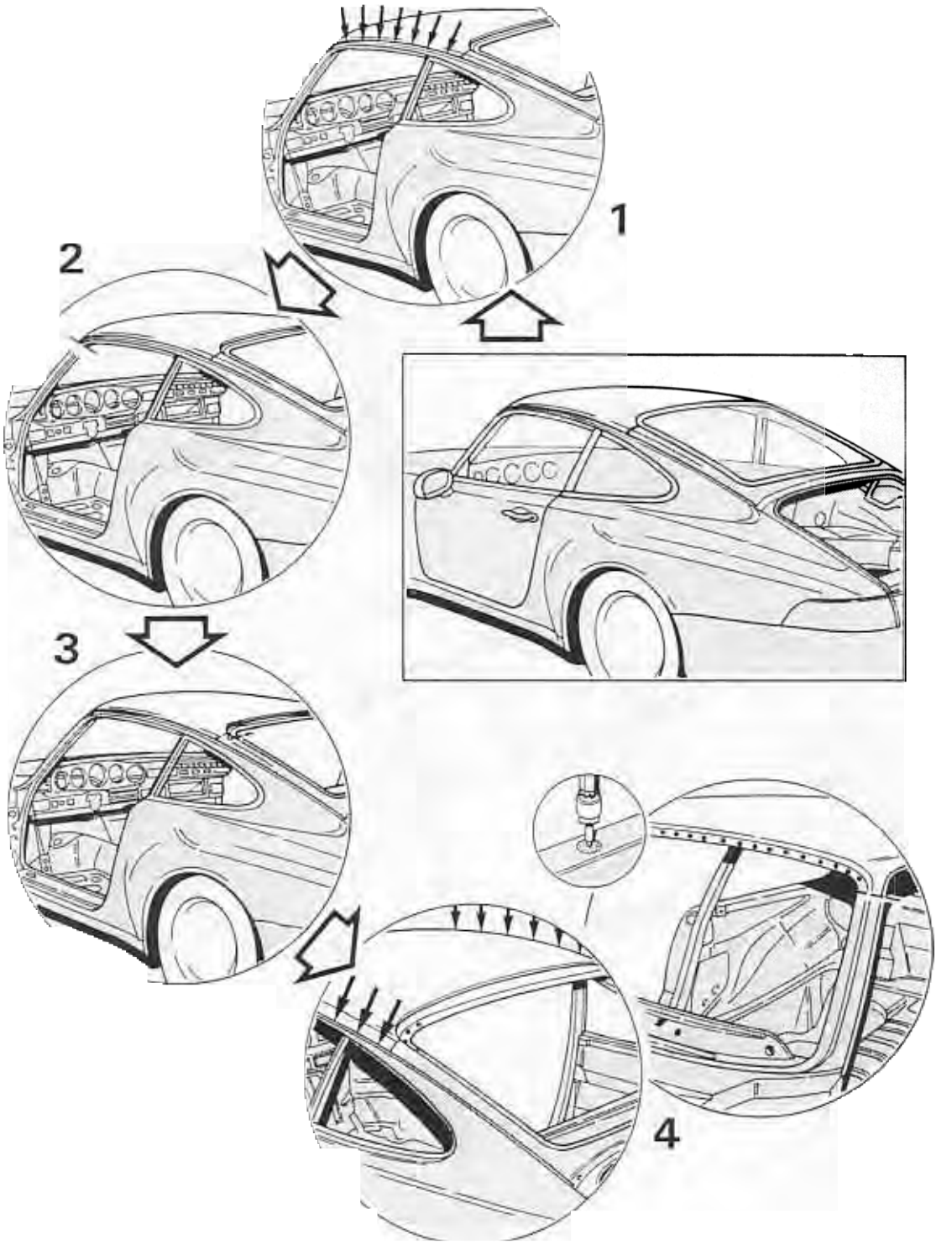

Replacing part of roof panel

Cutting roof partially out of body

Remove interior complete with window glass!

No.	Operation	Instructions
	Remove paint coat from roof flanges	Use a rotary wire brush to remove paint coating from roof flanges between A and C posts.
1	Separate flange joints	Separate flange joints between flange panels and roof rails as well as between side panels and roof rails. To separate the flange joints, heat the flanges and bend them open.
2	Cut through roof outer panel in A post area	Cut through roof outer panel as closely as possible to the windshield crossbeam at the A posts. **Caution: Take care not to cut into or damage the roof rails.**
3	Cut through roof outer panel in C post area	Cut through roof outer panel at C posts in rear window body aperture area. **Caution: Take care not to cut into or damage the roof rails.**
4	Separate spotwelds of roof outer panel	Separate spotwelds between roof outer panel and windshield crossbeam, roof rails, flange panels and side panels with a spotweld cutter.

Replacing part of roof panel

Fitting part of roof panel to body

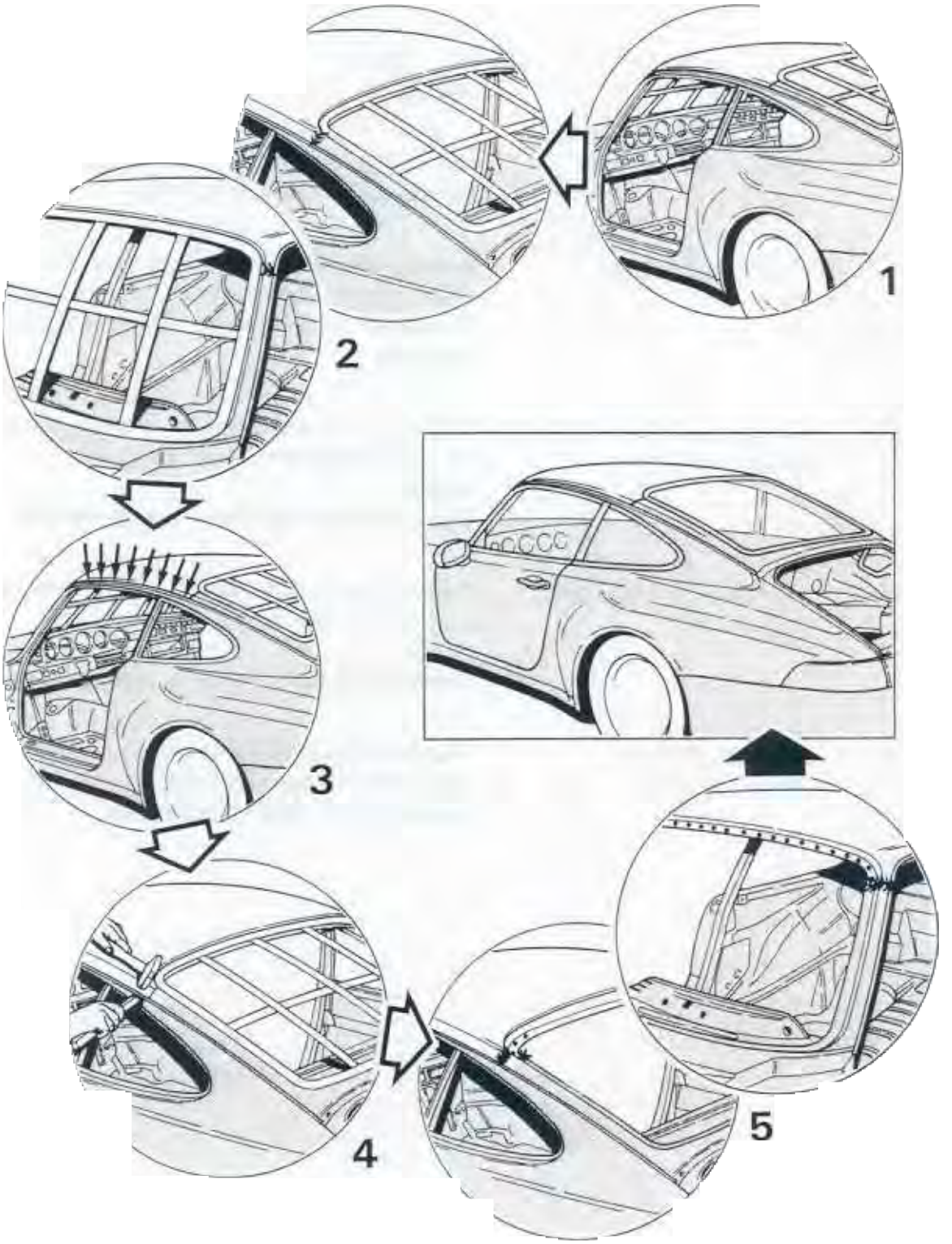

Replacing part of roof panel

Fitting part of roof panel to body

No.	Operation	Instructions
	Clean welding areas	Use a hot air gun or rotary wire brush to remove sealant residue, paint etc. from welding areas of body. Remove factory primer from welding areas of spare roof outer panel.
	Trial-fit roof outer panel into body	Trial-fit spare roof outer panel to body roof outer panel, making a butt joint.
1	Place Special Tools P 852 and P 853 into position	Place Special Tools **P 852** (windshield template) and **P 853** (rear window template) into body apertures and clamp into place along spotweld flanges using clamping tools.
	Attach roof outer panel	Using clamping tools, attach roof outer panel to roof rails, flange panels and side panels.
2	MIG-weld roof outer panel	MIG-weld spare roof outer panel to body roof outer panel, running a full seam.
	Tack-weld roof outer panel with MIG equipment	Tack-weld roof outer panel to spotweld flanges in windshield and rear window areas from inside (passenger compartment) using MIG equipment.
3	Spotweld roof outer panel	Spotweld roof outer panel to roof rails, side panels and flange panels. **Note:** **When spotwelding in the visible areas, use a copper plate to avoid spotweld indentations.**

No.	Operation	Instructions
4	Flange roof outer panel	Flange roof outer panel and roof rails with flange panels and side panels.
	Remove all Special Tools	
5	Spotweld the spotweld flanges	Spotweld the spotweld flanges of the windshield and rear window body apertures.
	Finish welding in the roof outer panel	MIG-weld roof outer panel in all areas of A and C posts that have been inaccessible up to now, running a full seam.
	Grind down MIG weld seams	Grind down MIG weld seams along A and C posts.

51 03 35 Replacing the complete roof

The following body spare parts and special tools are required for the "Replacing the complete roof" repair operation:

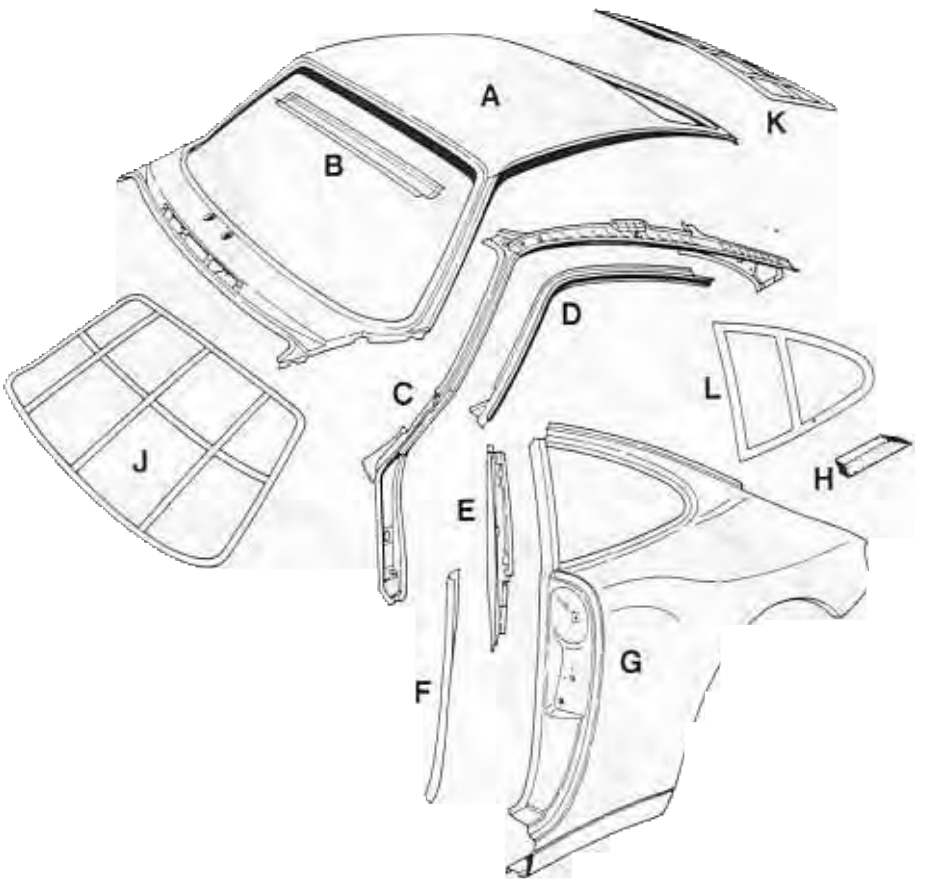

1912 - 51

A = Outer roof sheet
B = Transverse windshield section
C = Roof rail
D = Flange panel
E = Inner panel B-post
F = Enclosed angle
G = Side panel
H = Sealing
I = Special Tool P 852
K = Special Tool P 853
L = Special Tool P 854

R p ıg om te

tting oof panel: ody

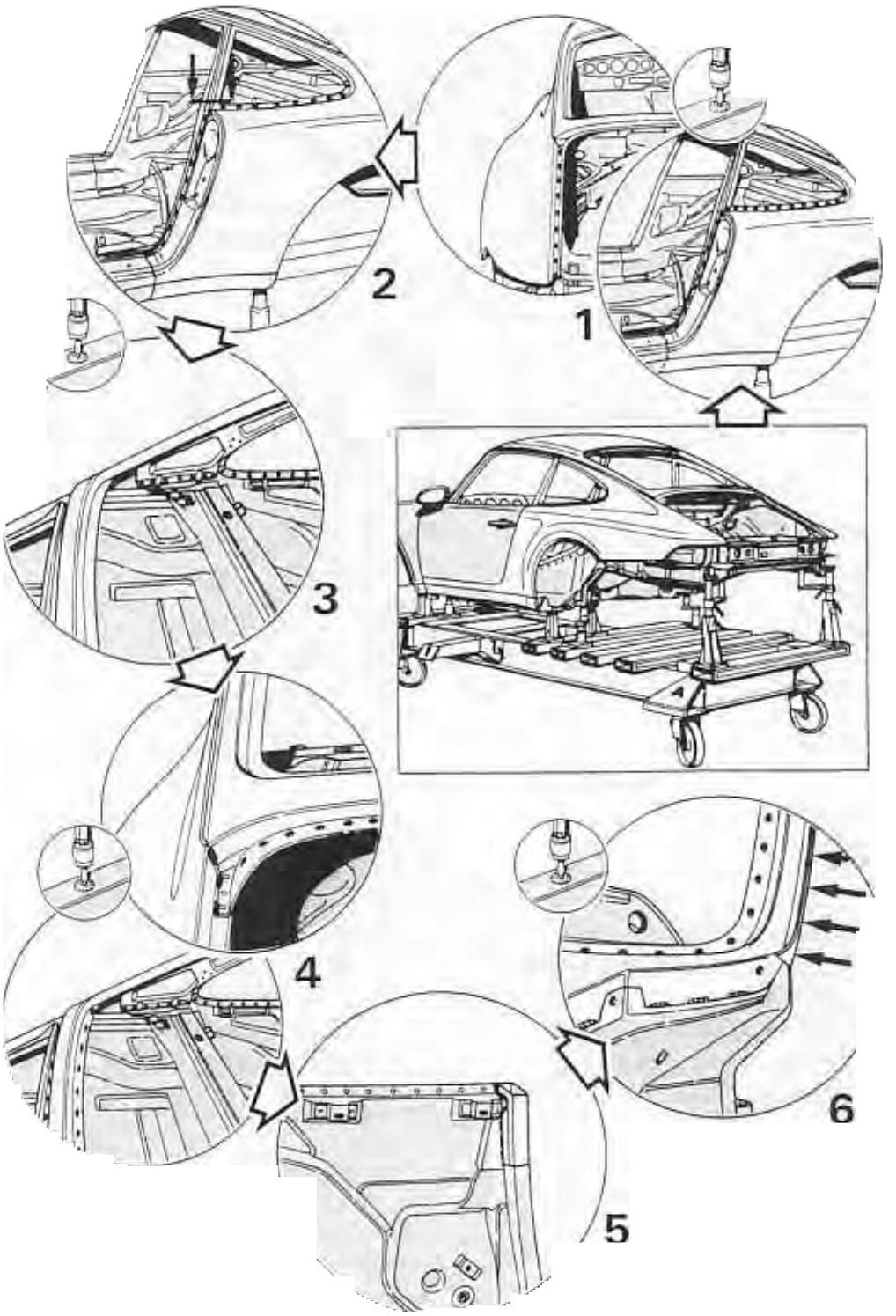

Replacing the complete roof

Cutting roof panel and side panels from body

Remove assemblies and accessories as well as complete interior equipment including all body glass!

Body straightening operations must be completed before the roof is replaced!

No.	Operation	Instructions
	Set up vehicle on straightening equipment	Set up vehicle with fitted front-end assemblies on basic straightening attachments set and tighten vehicle.
1	Separate spotwelds at side panel	Separate spotwelds between side panel and rear wheel housing using a spotweld cutter. Separate MIG weld seams between side panel and door sill, roof sheet/rear wheel housing and crossmember.
	Separate brazed joint of guide tube	Separate brazed joint of lid release guide tube at side panel and lock pillar.
2	Cut through B-post	Cut through B-post along extension of bottom edge of rear side window using a body panel saw.
	Cut through A-post	Cut through A-post using a body panel saw.
3	Separate spotwelds between roof rail/rear wheel housing	Separate spotwelds between roof rails and rear wheel housing with a spotweld cutter.
4	Separate spotwelds between roof and rear shelf panel	Separate spotwelds between roof and rear shelf panel using a spotweld cutter.
	Lift roof complete with side walls the body	
5	Separate weld joints of inner panel	Grind off MIG weld seams between rear wheel housing and inner panel (B-post).
6.	Separate weld joints of cowl panel Separate flange joint of A-post/flange panel	Separate spotwelds between cowl panel and upper dashboard section using a spotweld cutter. Separate MIG weld joints between cowl panel and wheel arch. Separate flange joint between A-post and flange panel.

Replacing the complete roof

Fitting roof and side panels to the body

Replacing the complete roof

Fitting roof and side panels body

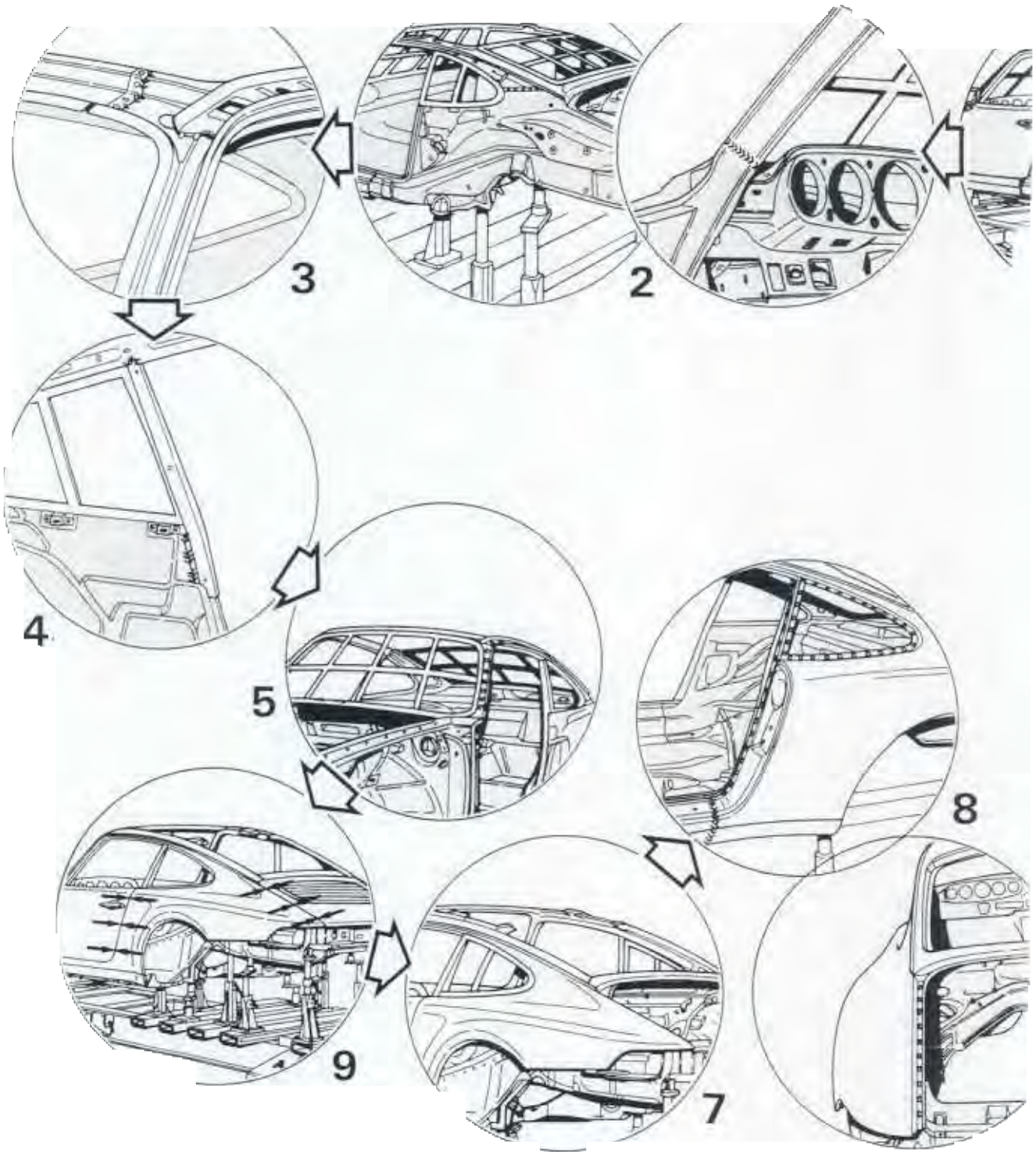

inner

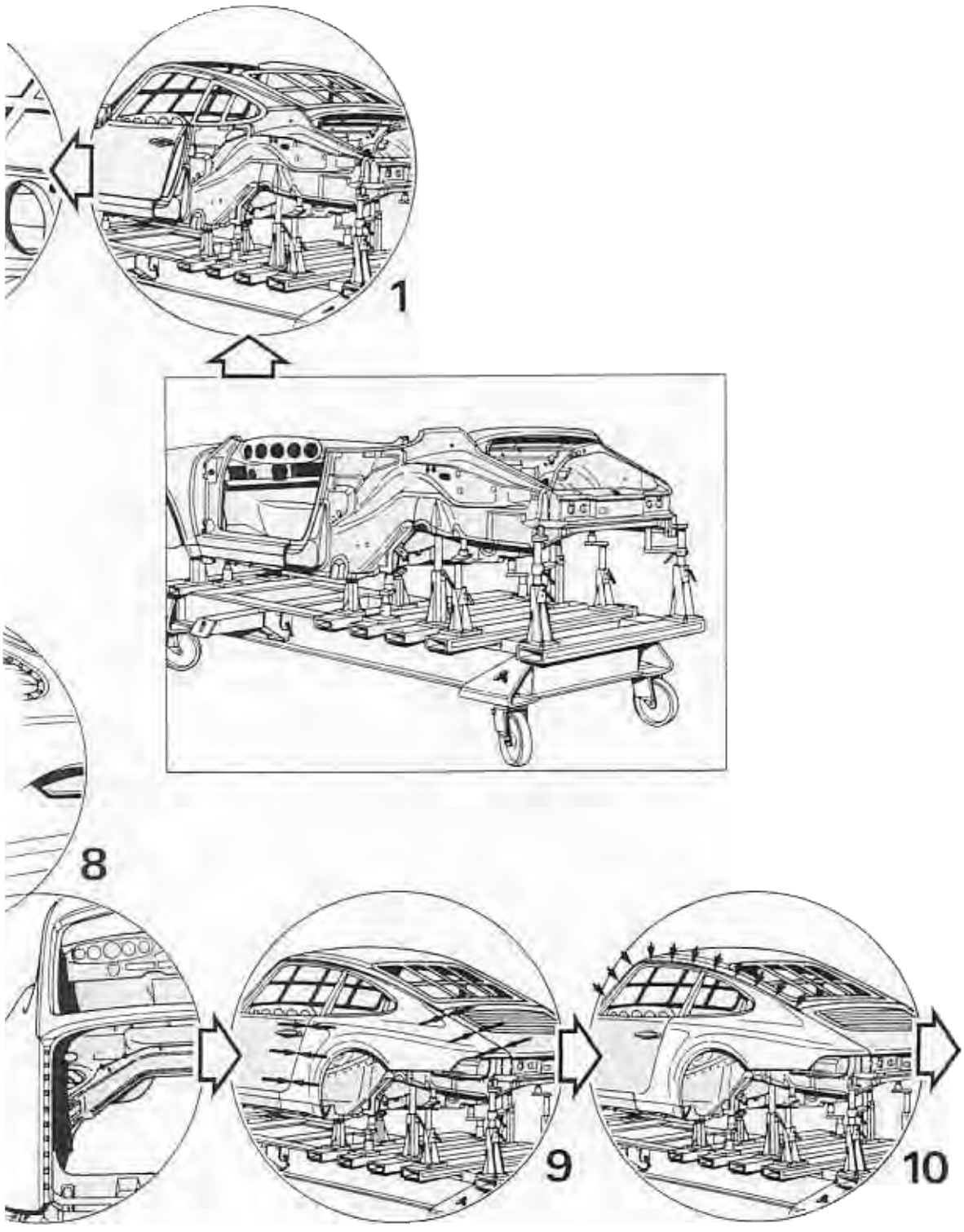

1914-51

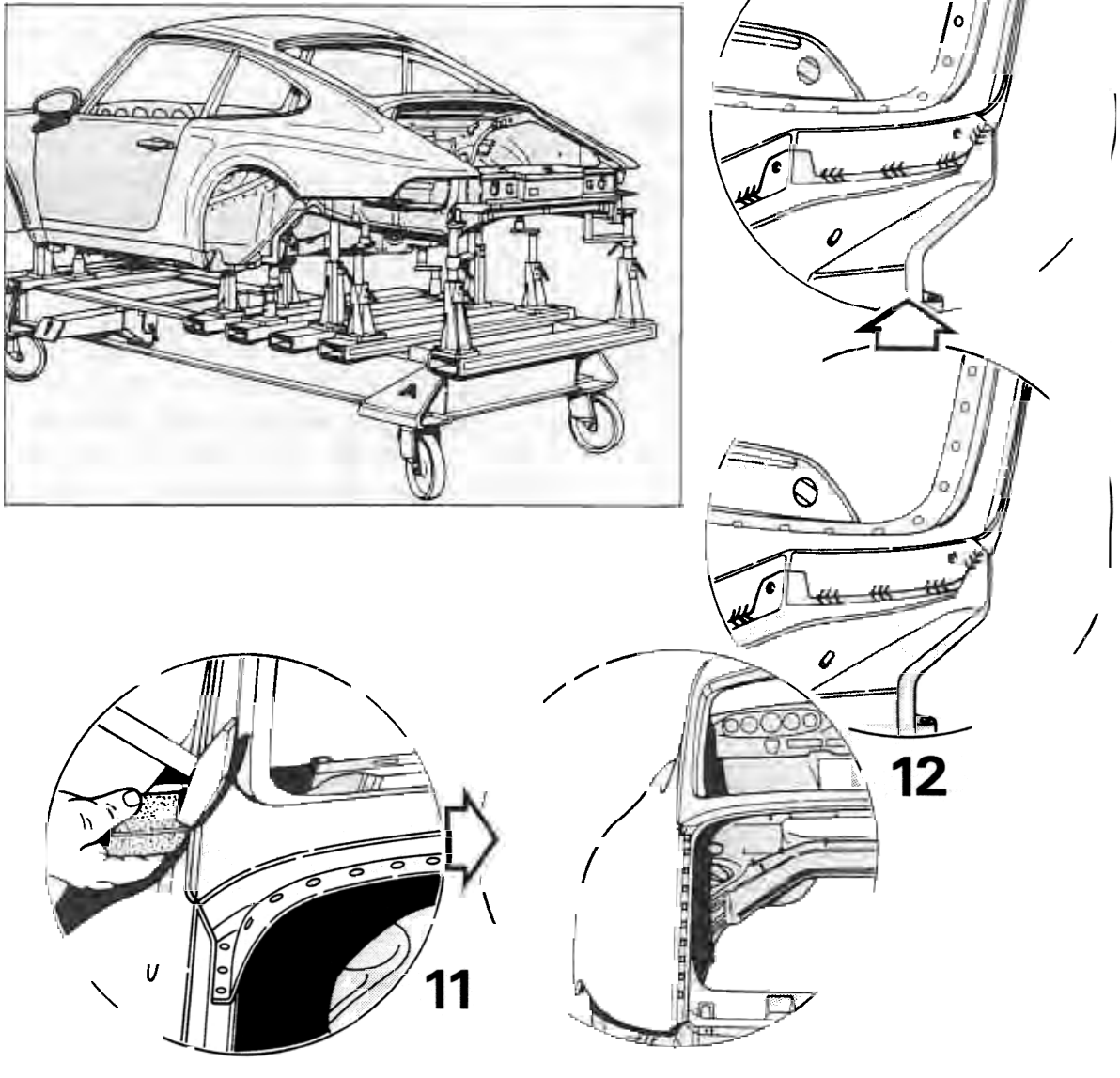
13
12
11

Replacing the complete roof

Fitting roof and side panels to the body

No.	Operation	Instructions
	Clean the welding areas	Use a hot air gun or rotary brush to clean remaining sealant, paint etc. from the welding areas of the body panels.
	Fit doors to body	
	Trial-fit roof rails and flange panels to body	Trial-fit roof rails and flange panels to body observing correct door contours.
1	Insert Special Tools P 852, P 853 and P 854	Insert Special Tools P 852 (windshield gauge), P 853 (rear window gauge) and P 854 (rear side window gauges) into body apertures and clamp to spotweld flanges along with roof rails (using suitable clamping tools).
2	Weld roof rails to body	Weld roof rails to A-posts running a full seam. Spotweld roof rails to rear wheel housings.
3	Trial-fit windshield transverse section into body and spotweld into place	Trial-fit windshield transverse section according to contours of Special Tool P 852 into the body, clamp in place with special clamps and apply spotwelds. MIG-weld windshield transverse section and roof rails running a discontinuous full seam.
4	Weld B-post inner panel to body	Trail-fit inner panels of B-posts to body and clamp in place with special clamps. MIG-weld B-post inner panels and roof rails running a full seam. MIG-weld B-post inner panels and rear wheel housings in the rear side window area running a full seam and MIG-weld other areas running a discontinuous full seam.

No.	Operation	Instructions
5	Weld flange panels to body	Spotweld flange panels with roof rails using the door frame contours for reference. MIG-weld flange panels and A-posts running a full seam. MIG-weld flange panels to B-post inner panels and roof rails running a full seam.
	Remove all special tools and finish welding	Remove Special Tools P 852 and P 854 and weld all areas that have not been accessible until now using MIG equipment.
6	Trail-fit side panels to body	Trial-fit side panels to body. Introduce guide tube for lid release cable into side panel. Install doors and rear lids to check fit and body contours. Make sure the door-to-body gaps al well as the rear lid-to-body gaps are parallel throughout.
7	Insert Special Tools P 854	Insert Special Tools P 854 into body aperture for rear side window and attach to spotweld flange.
	Tack weld side panels using MIG equipment	Tack weld side panel to door sill, B-post, spotweld flange for rear side window, rear wheel housing and cross member using MIG equipment.
8	Spotweld and MIG weld side panels	Spotweld side panel to rear wheel housing, B-post and roof rail. MIG-weld side panel to door sill, roof rail (in B-post area) and cross member running a discontinuous full seam.
	Trial-fit outer roof sheet to body	Adjust outer roof sheet according to spotweld flanges in the body apertures for the windshield and rear window. Make sure the body gaps between outer roof sheet and front and rear lid are parallel throughout.

No.	Operation	Instructions
9	Insert Special Tools P 852 and P 853	Insert Special Tools P 852 and P 853 into body apertures and clamp to spotweld flanges using suitable clamping tools.
	Tack weld outer roof sheet using MIG equipment	Tack weld outer roof sheet to spotweld flanges in the windshield and rear window areas from inside (passenger compartment) using MIG welding equipment.
10	Spotweld outer roof sheet	Spotweld outer roof sheet to roof rails, side panels, flange panels and rear parcel shelf. **Note:** **When spotwelding in the visible areas, insert a copper plate to avoid indentations at the spotwelds.**
11	Flange outer roof sheet	Trim a flange at outer roof sheet and rails along flange panels and side panels.
12	MIG-weld outer roof sheet	MIG-weld flange ends of outer roof sheet to C-posts and side panels running a full seam. MIG-weld outer roof sheet and B-posts running a full seam. MIG-weld outer roof sheet to A-posts and wheel arch running a discontinuous full seam.
	Take out all special tools	
13	Spotweld flanges of spotweld joints	Spotweld flanges of spotweld joints of windshield and rear-window apertures in a continuous line.
	Braze guide tube for cover operating cable	Braze guide tube for lid release cable to lock post (B-post).
	Spotweld angle plate to rear wheel housings	
	Grind down MIG weld seams	Grind down MIG weld seams of flange ends and B-post.
	Insert seals	Insert seals between side walls and side panels.

53 69 19 Removing and installing wheel housing liner

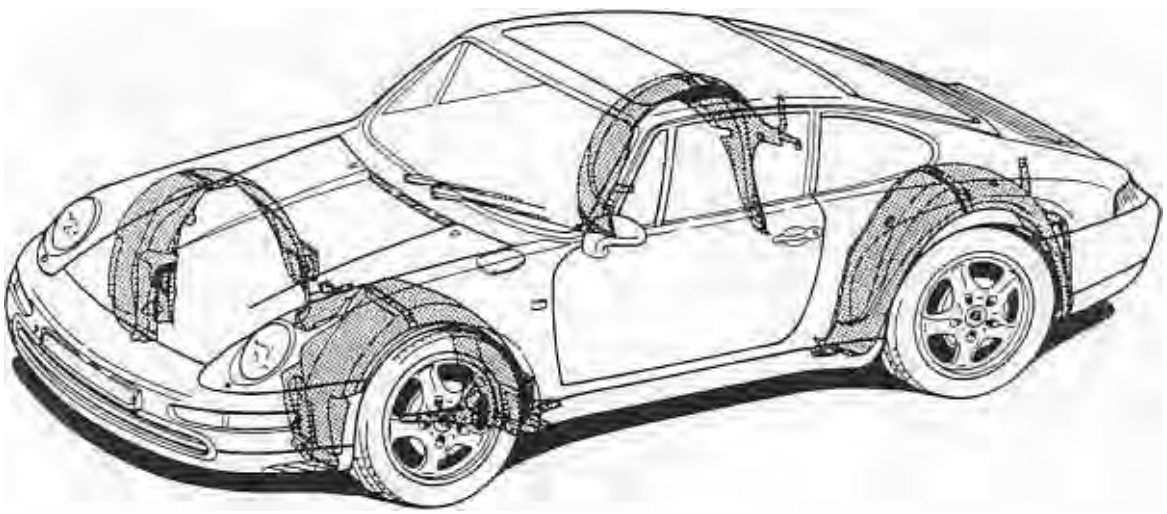

53 69 19 Removing and installing wheel housing liner

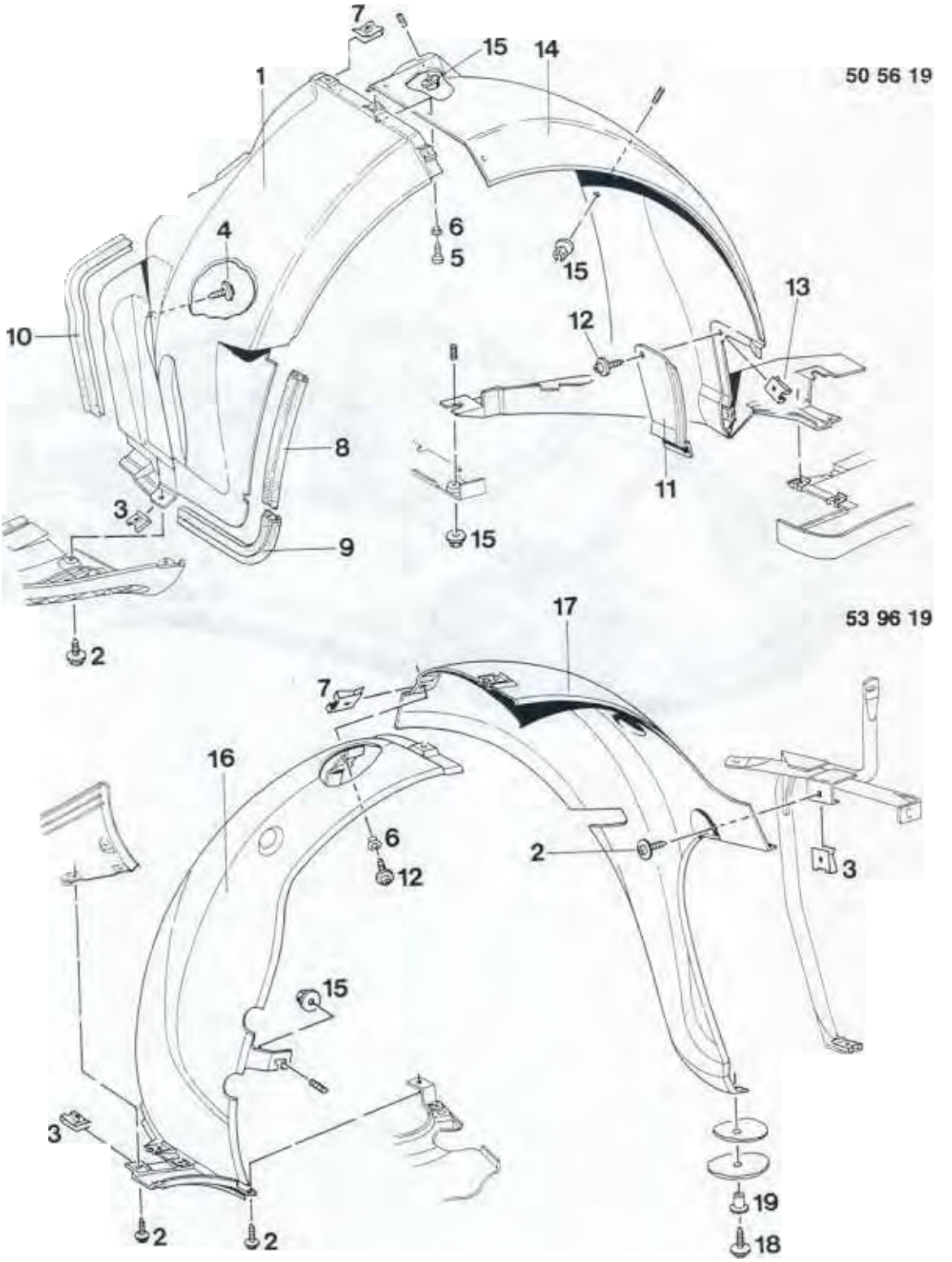

53 69 19 Removing and installing wheel housing liner

No.	Designation	Qty.	Note: Removal	Installation
2	Screw with washer B 4.8 x 19	2		
3	Sheetmetal nut B 4.8	2		Adjust to center of hole
6	Spacer	6		
7	Sheetmetal nut B 4.2	6		Adjust to center of hole
12	Screw with washer B 4.8 x 19	4		
15	Plastic nut T 5	4		Check, replace if required
16	Wheel housing liner	2		
17	Wheel housing trim	2		
18	Self-tapping screw B 4.8 x 19	2		
19	Spacer 6.1 x 1.0	2		

53 55 55 Replacing side section - Cabriolet

In May 1995, we introduced technical modifications on the side section and rear centre panel in production. The modification involves a change from a narrow joint to a wide joint between the side section and rear centre panel.

For the repair "Replacing side section" on vehicles with narrow joint up to
Vehicle Identification Number **99 SS 33 23 68 RoW**
99 SS 34 34 68 USA,
the side section spare part with wide joint is fitted in the body as a part panel to preserve the narrow joint.

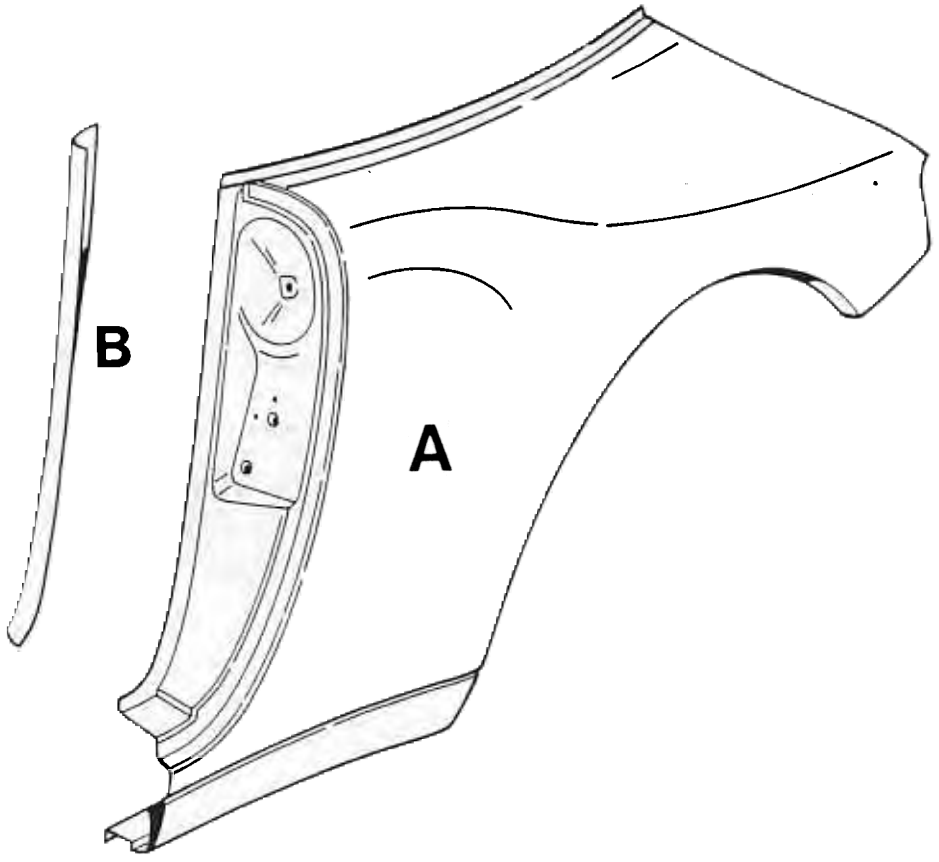

629 - 96

Spare body parts:
A = Side section
B = Edge fitting

Cutting side section out of the body

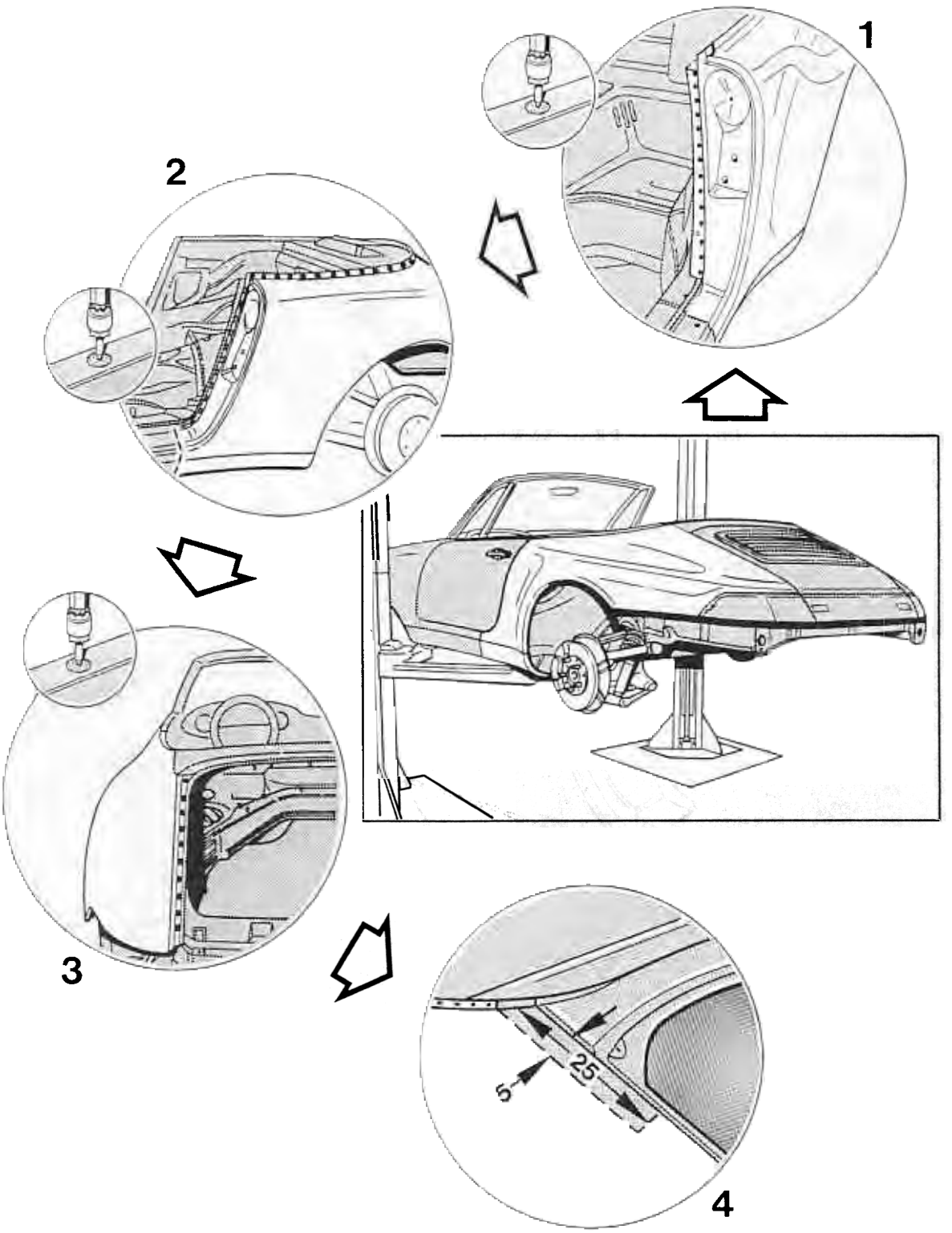

Cutting side section out of the body

Remove all accessories and the interior, including convertible top!

No.	Operation	Instructions
	Separating spot welds of the edge fitting	Use the spotweld cutter to separate spot welds between the edge fitting and wheel housing at rear.
2	Separating spot welds of the side section	Use the spotweld cutter to separate the spot welds between the side section edge and wheel housing edge at top and the B-pillar. Cut the side section in front of the side member at the outside with the body saw.
3	Separating spot welds of the side section at rear	Use the spotweld cutter to separate the spot welds between the side section and the wheel housing. Grind off MIG seams between the side section and cross member.
4	Cutting side section from the rear centre panel	Use the body saw to cut off the side section so that that 5 cm of the side section from the joint to the outside and 25 cm to the rear remain.

Fitting side section in the body

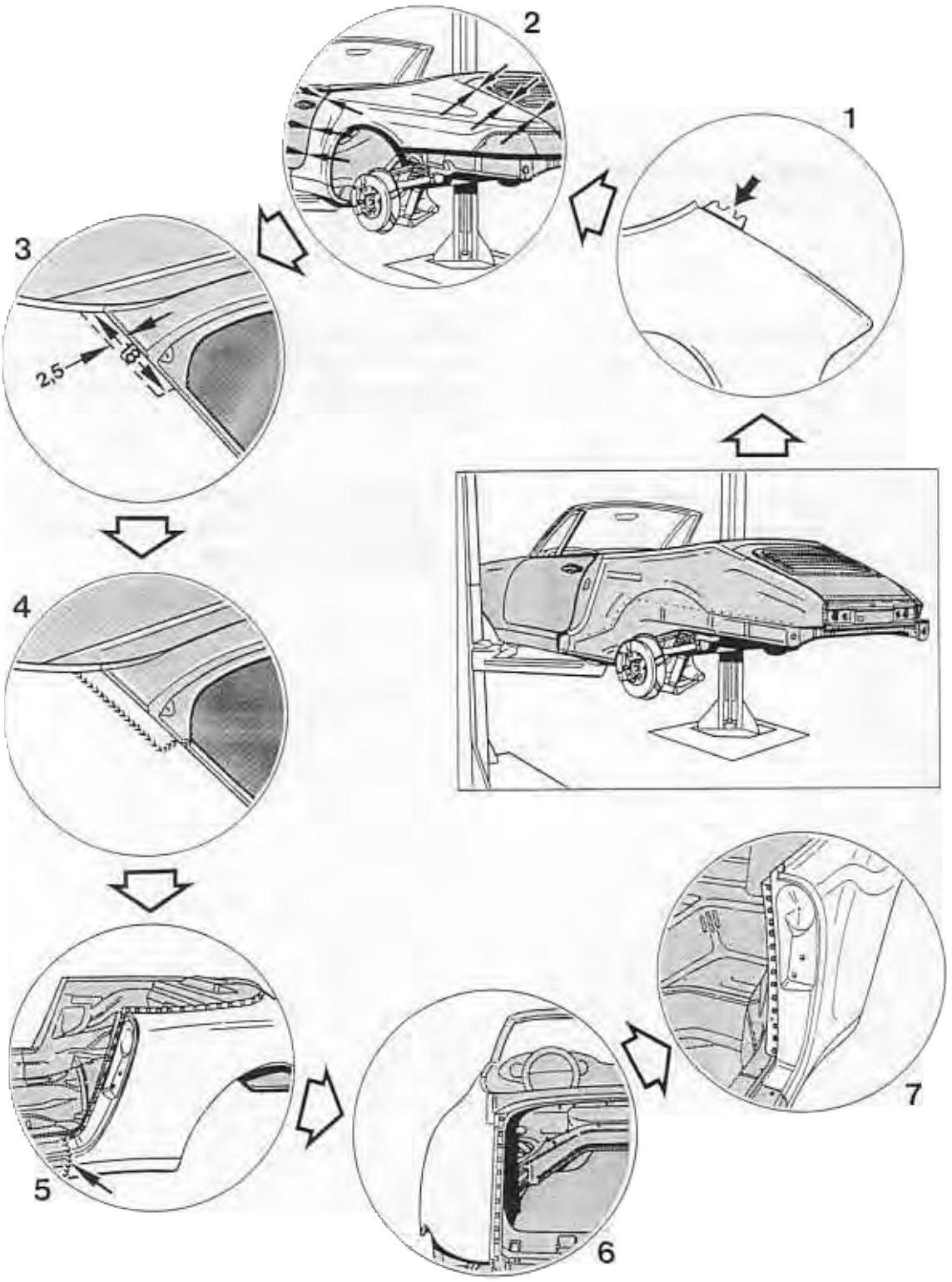

Fitting side section in the body

No.	Operation	Instructions
	Cleaning welding areas	Use a hot air gun or rotary brush to remove underbody coating and paint layers etc. Remove the factory-applied primer coat from the welding areas of the spare parts with a rotary brush.
1	Cutting off side section	Cut side section at the folded edge in the area where the side section meets the rear centre panel.
2	Adapting side section to the body	Adapt side section to the body. Fit door and rear cover to check the body contours. The gaps between the door and body and between the rear cover and body must be parallel along the entire perimeter.
3	Adapting side section to the rear centre panel	Cut the side section – **2.5 cm** to the outside and **18 cm** to the rear from the gap – and the underlying overlapped panel using the body saw.
	Tack-welding the side section with the MIG welder	Use the MIG welder to tack-weld the wheel housing with the side section B-pillar, side section edge and the wheel housing edge at top and the side section at rear with the cross member.
4	Welding spare side section to body side section with the MIG welder	Use the MIG welder to weld the spare side section to the body side section with a continuous butt weld.
5	Spotwelding and MIG welding the side section	Spotweld side section, B-pillar, to the wheel housing at front. Use the MIG welder to weld the side section to the side member at the outside and wheel housing at front with a continuous weld.
6	Spotwelding and MIG welding the side section at rear to the wheel housing	Spotweld the side section to the wheel housing at rear; weld the side section end to the cross member with the MIG welder.

No.	Operation	Instructions
	Grinding MIG weld seams	Grind MIG weld seams between the spare side section and body side section and side member at the outside.
7	Spotwelding edge fitting to the side section at the inside	Position edge fitting at the wheel housing liner at the front on the inside and spotweld in place

53 55 55 Partly renewing side panel

For the part-section repair "Partly renewing side panel" the following replacement body parts and special tools are required:

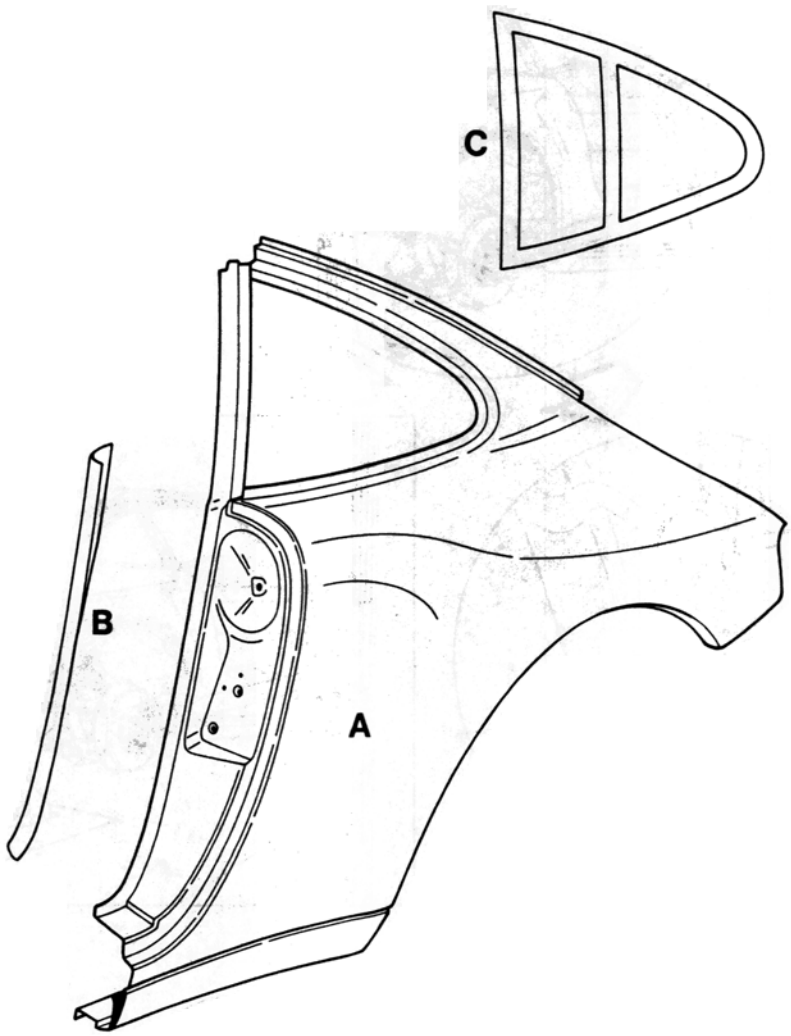

1919-53

A = Side panel
B = Angled surround
C = Special tool P 854

Partly renewing side panel

Cutting side panel partly from the body

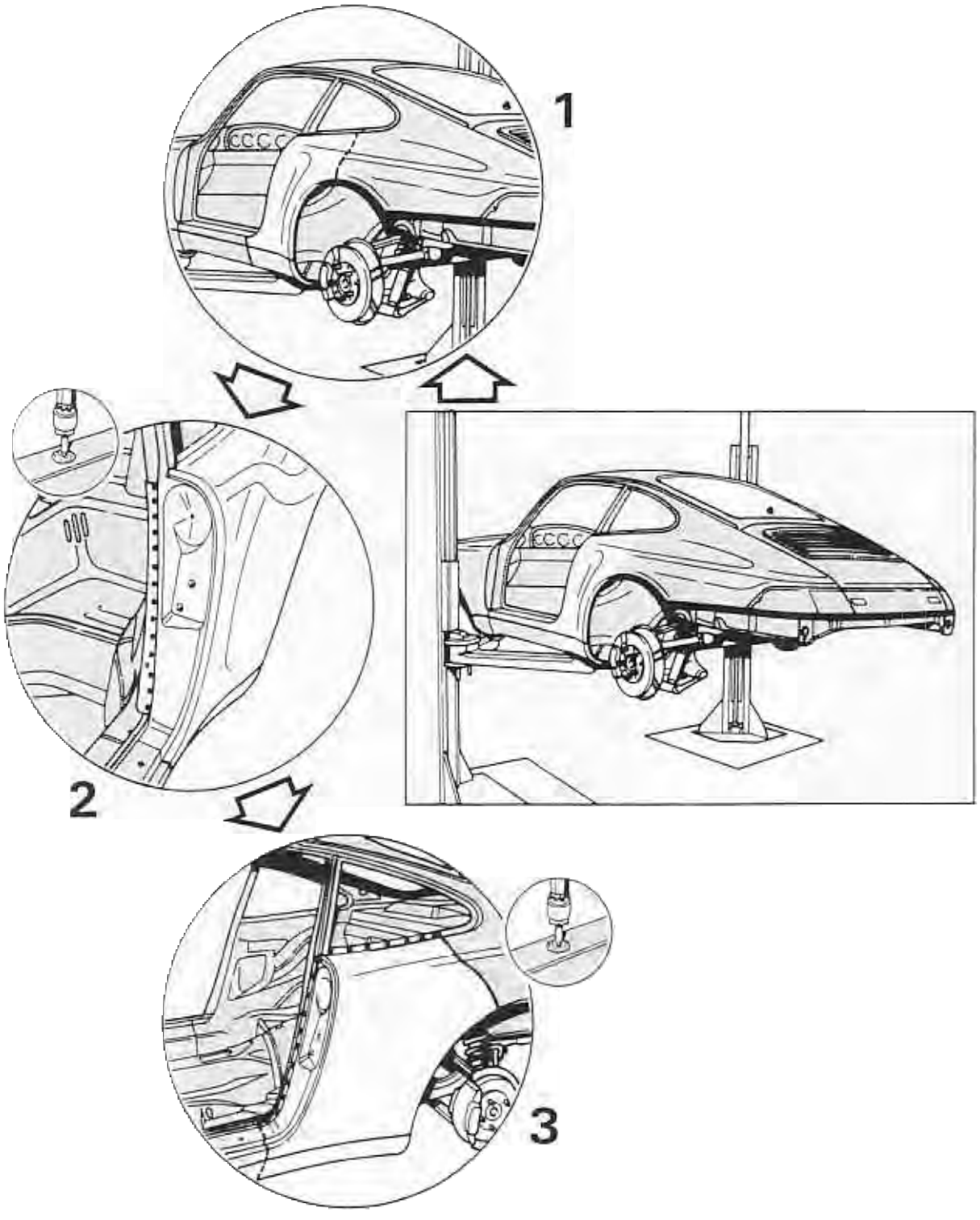

Cutting side panel partly from the body

Remove all attached equipment and the interior trim, including glass, from the side panel area.

No.	Operation	Instructions
	Cut through the side panel	Cut through the side panel with the body panel saw.
2	Separate the spot welds for the angled surround	Separate the spot welds between the angled surround and the rear wheel housing with a spot weld cutter.
3	Separate welds at side panel	Separate spot welds between side panel and rear wheel housing and B-post with a spot weld cutter. Cut through the side panel before the door sill using the body panel saw.

Fitting side panel body

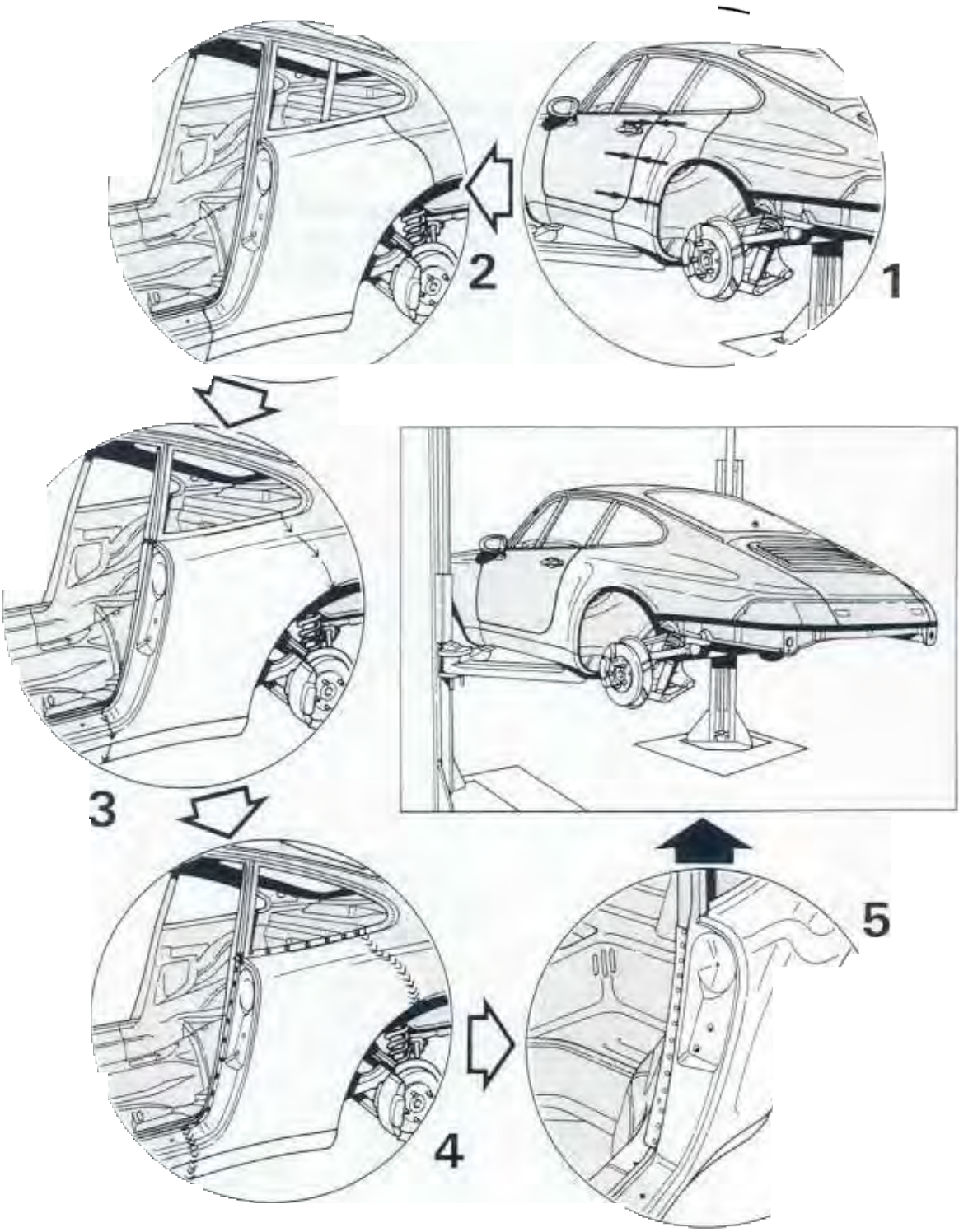

Fitting side panel to body

No.	Operation	Instructions
	Clean the weld areas	Us a hot air blower or rotary brusk to remove unterseal, paint etc. from weld areas on the body. Remove factory-applied primer coating from weld areas on the replacement parts with a rotary brush.
1	Fit the side panel into the body	Make a butt joint between the side panel and the body. Insert the door to check the body contour. The gap between door and body must be parallel all round.
2	Insert special tool P 854	Place special tool P 854 (rear side window template) into the body cutout for the rear side window, and secure to the spot weld flange with clamps.
3	Tack weld the side panel using inert gas	Using the inert gas method, tack weld the side panel to the door sill, rear wheel housing (B-post area) and rear side window spot weld flange. Take out special tool P 854 (rear side window template).
4	Spot and MIG weld the side panel	Spot weld the side panel to the rear wheel housing. MIG weld the side panel to the door sill and rear wheel housing with a full seam. Butt weld the replacement side panel to the body side panel under inert gas running a full seam.
	Sand the MIG weld seams	Grind the MIG weld seams between the side panel and the door sill and the butt weld seam between the replacement side panel and the body side panel.
5	Spot weld the angled surround to the rear wheel housing	Trial-fit and spot weld the angled surround to the rear wheel housing.

53 68 56 Partly renewing rear section of body

For the part-section repair "Partly renewing rear section of body" the following replacement body parts are needed:

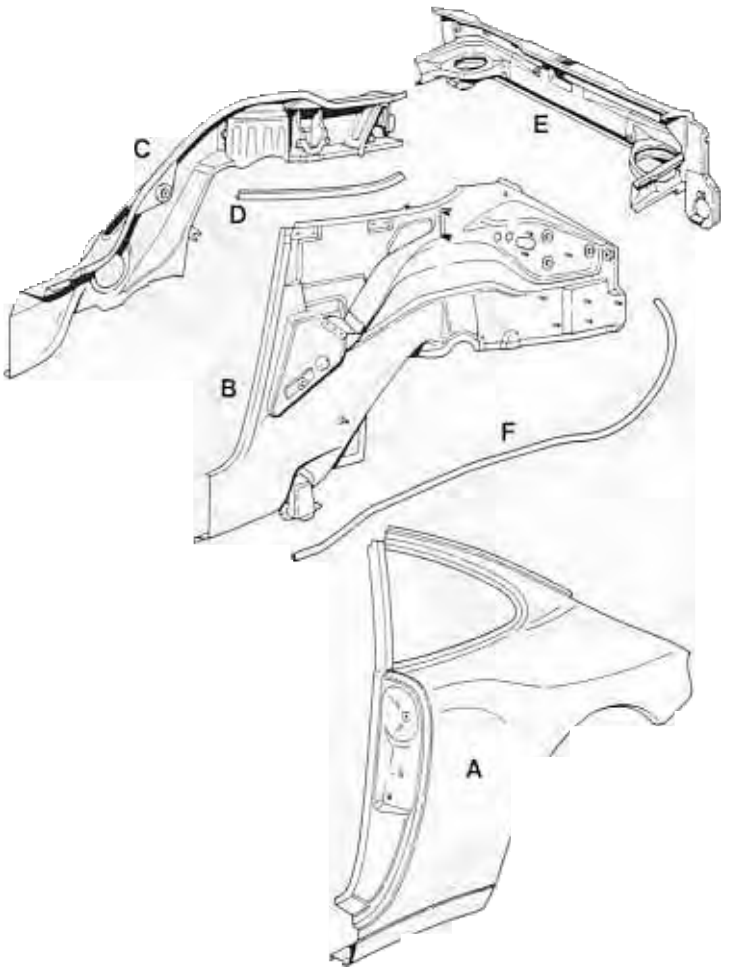

1922-53

A = Side panel
B = Rear wheel housing
C = Side member
D = Sectioned rail
E = Cross-member
F = Guide tube for lid release cable

Partly renewing rear section of body

Renewing cross-member with engine mount, partly renewing side panels, rear wheel housings and side members

Cutting rear section partly from the body

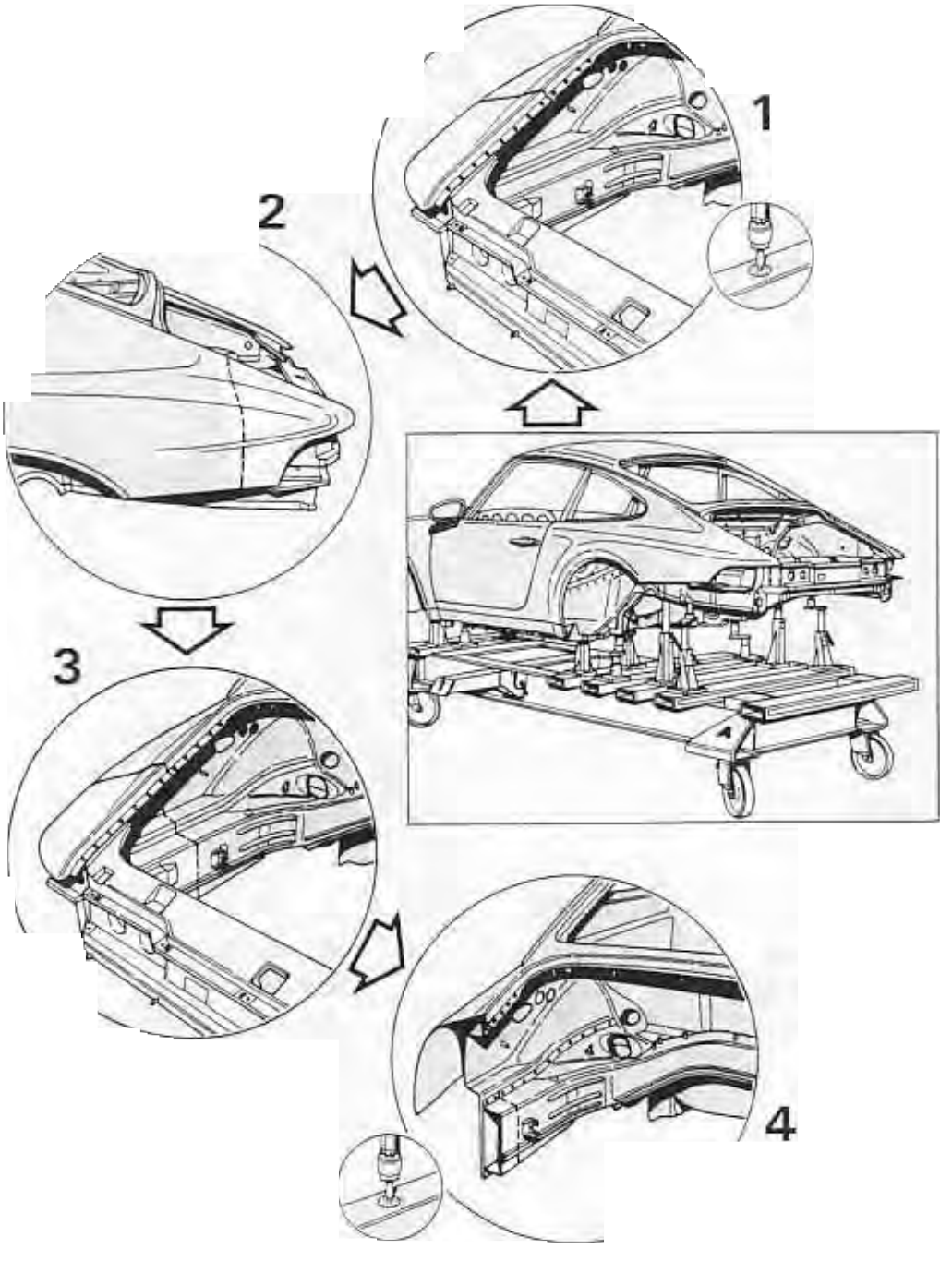

Partly renewing rear section of body

Renewing cross-member with engine mount, partly renewing side panels, rear wheel housings and side members

Partly renewing rear section of body

No.	Operation	Instructions
	Place car on body alignment rig	Mount the car with mechanical assemblies in position at the front on the basic set of aligning angles and secure it.
	Separate the side panel welds in the damaged area	In the damaged body area, separate the spot welds between the side panels and the rear wheel housings with spot weld cutters. Grind away the MIG weld seams between the side panels and the cross-member.
2	Separate the side panels from the body	Cut away the damaged side panel areas with the body panel saw.
3	Cut away the rear wheel housings and the side members	Cut away the damaged areas of the rear wheel housings and the side members with the body panel saw.
4	Cut away the side members in a stepped pattern	**Cut away both side members so that the cut edges of the side members form a step in relation with the cut edges ot the rear wheel housings.** Separate the spot weld joints between the side members and the rear wheel housings using spot weld cutters. Cut away the side members with the body panel saw after they have been separated.
	Separate the brazed joint for the guide tube	Separate the brazed joint for the lid release cable guide tube on the rear wheel housing and at the lock post.

Partly renewing rear section of body

Renewing cross-member with engine mount, partly renewing side panels, rear wheel housings and side members

Partly inserting rear body section into body

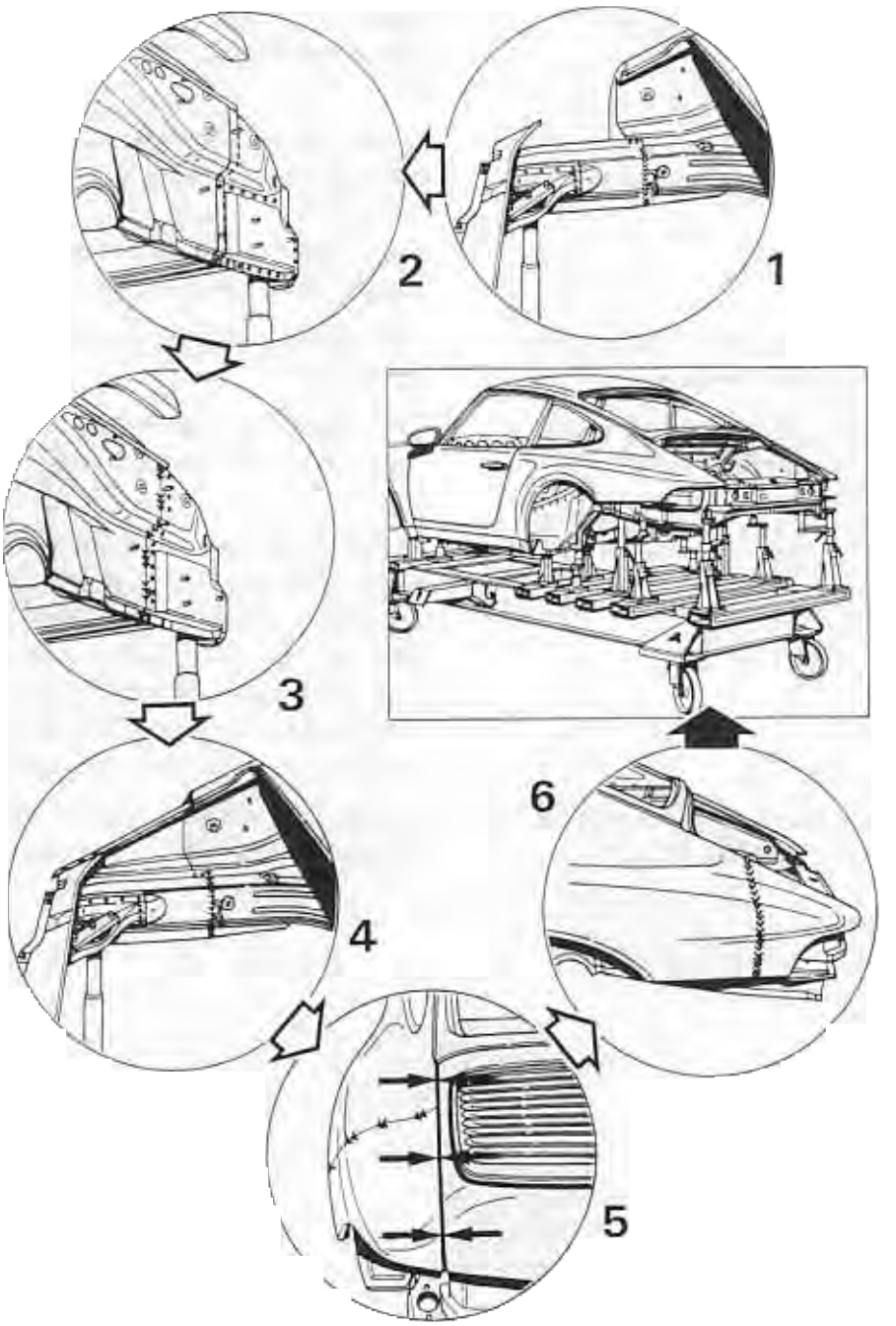

Partly renewing rear section of body

Renewing cross-member with engine mount, partly renewing side panels, rear wheel housings and side members

Partly inserting rear body section into body

No.	Operation	Instructions
	Clean the weld areas	Use a hot air blower or rotary brush to remove underseal, paint etc. from the weld areas on the body. Remove factory-applied primer coating from the weld areas on the replacement parts with a rotary brush.
	Align cross-member with rig aligning angles	
1	Fit the side member to the body and weld in	Make a butt joint at the side member, secure it with clamping tools and tack weld into position under inert gas. Butt weld the replacement side member to the body side member under inert gas running a full seam. Spot weld the side member to the cross-member and engine mount. Grind the butt weld seams on the side members.
2	Prepare rear wheel housings for installing in body	Fit the rear wheel housings into the body. Flange the replacement rear wheel housings outwards and overlap them with the body rear wheel housings. In the side panel contact areas, make a butt joint with the rear wheel housings. Drill out the rear wheel housings in the upper side member area, ready for plug welding.
3	Weld the rear wheel housings into the body	Secure the rear wheel housings with clamping tools and tack weld them into position under inert gas. Butt weld the rear wheel housings in the side panel contact areas with a full seam, under inert gas. Plug weld the replacement rear wheel housings to the body rear wheel housings in the upper side member area, using inert gas. Spot weld the replacement rear wheel housings to the body body rear wheel housings and the side member. **In addition, MIG weld all spot and plug weld points between the replacement rear wheel housings and the body rear wheel housings running a discontinuous full seam.**

No.	Operation	Instructions
4	Spot weld cross-member with rear wheel housings	
	Weld impact tube or impact damper half-mounts	Spot weld the impact tube or impact damper half-mounts or weld by the inert gas method with a discontinuous full seam.
	Grind the butt weld seams	Grind the butt weld seams on the rear wheel housings in side panel contact areas.
	Braze on the lid release cable guide tube	Insert the guide tube for the lid release cable and braze it to the lock post, rear wheel housings and cross-member.
5	Fit the side panels into the body and tack weld	Fit the side panels to the body. Insert the rear lid to check the body contour. The gap between the rear lid and the body must be parallel all round. Tack weld the side panels into position under inert gas.
6	Spot and inert-gas welding of side panels	Butt weld the replacement side panels to the body side panels under inert gas running a full seam. Spot weld the replacement side panels with the rear wheel housings. MIG weld the side panels to the cross-member with a discontinuous full seam.
	Fit the sectioned rails and weld them to the side members	Fit the sectioned rails, spot weld them to the spot weld flanges on the side members/rear wheel housings and tack weld them in the engine mount areas.
	Grind the butt weld seams on the side panels	

53 47 55 Replacing side member w. cross member, rear wheel housing & side panel

The following materials and tools are required for the "Replacing side member with cross member, rear wheel housing and side panel" repair operation:

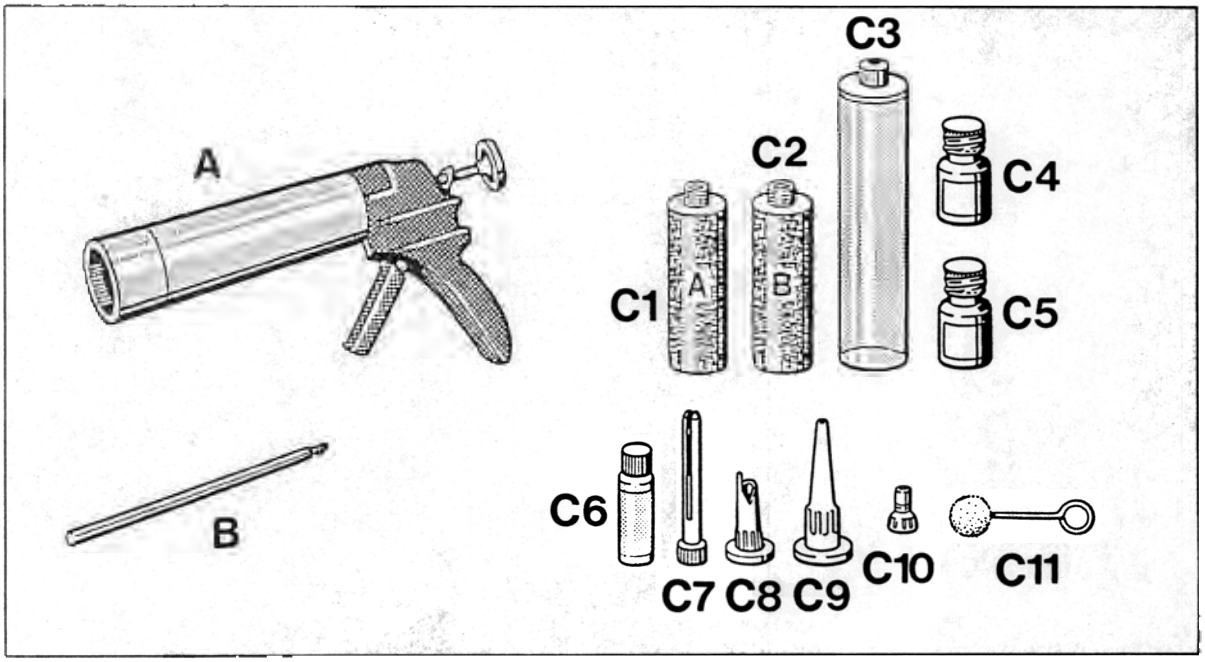

A	Bonding gun	VAG 1628	e.g. VW Werk AG KD-Gerätevertrieb
B	Mixing rod 9528	000.721.952.80	Porsche Parts Dept.
C	Bonding set	999.915.509.40	

Bonding set contents:

C 1 = Cartridge component A
C 2 = Cartridge component B
C 3 = Mixing cartridge
C 4 = Primer
C 5 = Activator
C 6 = Cleaning solution
C 7 = Injector nozzle
C 8 = Application nozzle
C 9 = Application nozzle
C 10 = Filling nozzle
C 11 = Touch-in tool

Replacement parts and special tools

The following replacement body parts and special tools are required for the "Replacing side member with cross member, rear wheel housing and side panel" repair operation:

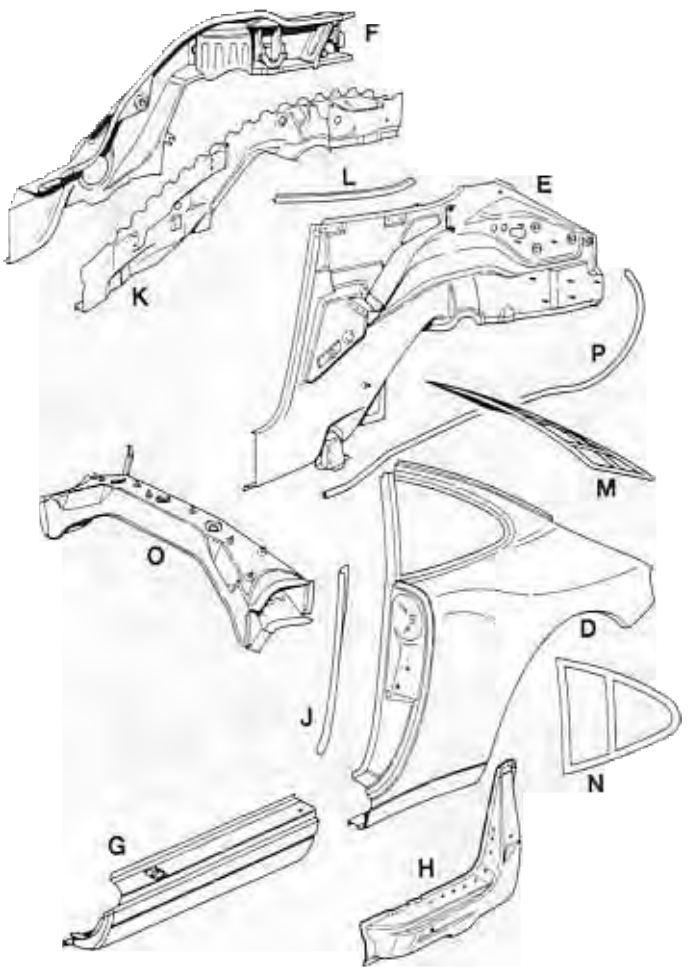

1932-53

D = Side panel
E = Rear wheel housing
F = Side member
G = Door sill
H = Gusset plate
I = Angled surround
K = Reinforcement rear wheel housing
L = Sectioned rail
M = Special tool P 853
N = Special tool P 854
O = Cross member
P = Lid release guide tube

Cutting rear body section from body on one side

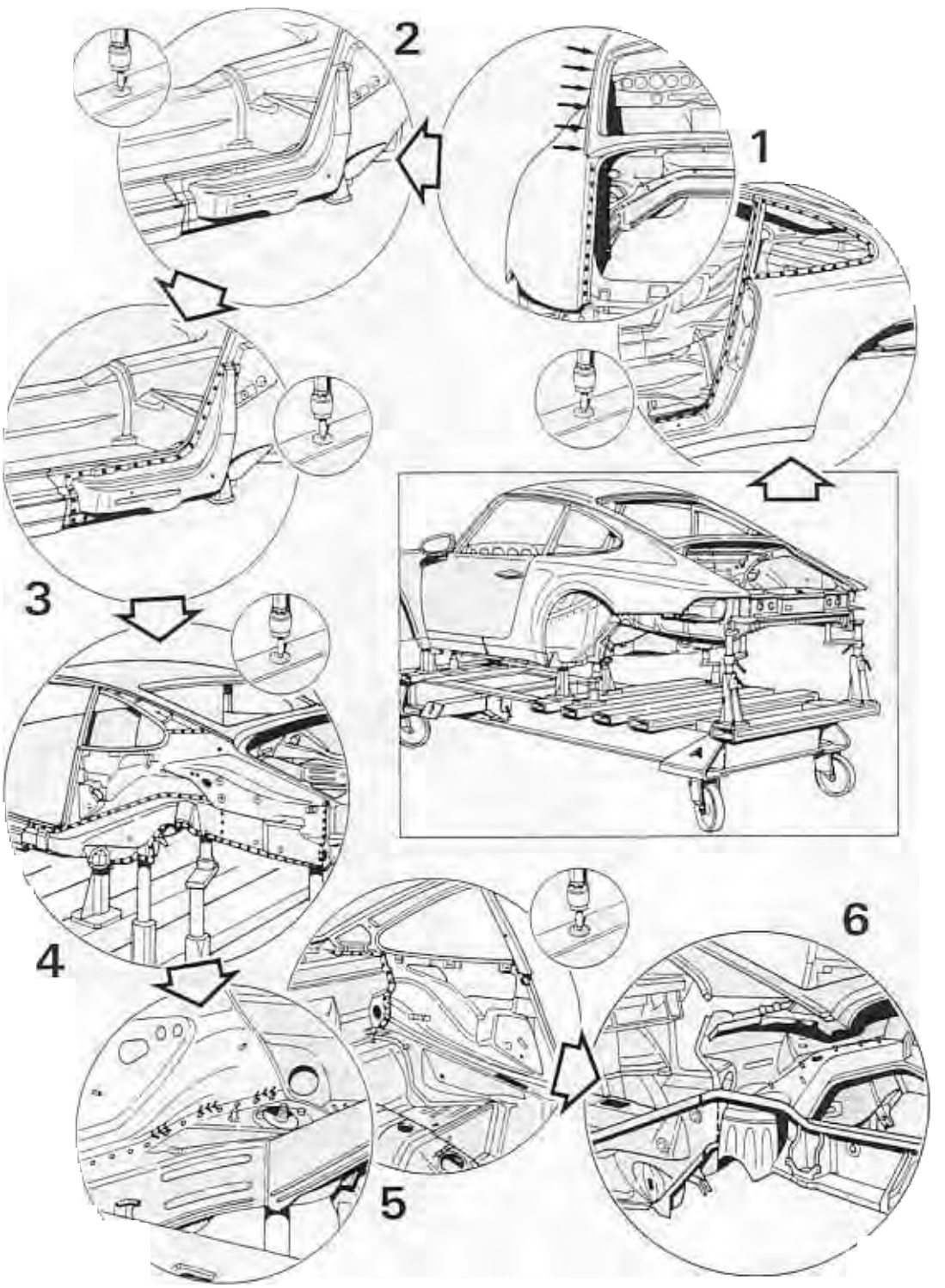

Cutting rear body section from body on one side

Remove all mechanical assemblies and attached equipment and also the complete interior trim including glass from the interior and exterior of the rear body section.

No.	Operation	Instructions
	Mount car on body alignment rig	Mount the car with mechanical assemblies in place at the front on the basic set of alignment angles, and secure it.
1	Separate the welded joints at the side panel Separate the flange joint between side panel and roof	Using a spot weld cutter, separate the spot welds between the side panel and the rear wheel housing, the B-post and the roof frame member. Separate the MIG weld seams between the side panel and the door sill, roof frame (in the B-post area), outer roof panel/rear wheel housing and cross-member. Cut through the flange joint between the side panel and the roof.
2	Cut through the door sills and separate the welded joints	Cut through the door sills with the body panel saw. Separate the spot welds between the door sill and the side member and the central side member with the spot weld cutter. Grind away the MIG weld seams between the door sill and the gusset plate.
3	Separte the welded joints at the gusset plate	Separate the welded joints between the gusset plate and the rear wheel housing and central side member.
4	Separate the welded joints at the rear wheel housing (from the outside)	Bend up the angled surround at the B-post. Separate the spot welds between the rear wheel housing and the side member, roof frame and central side member, using spot weld cutters.
5	Separte the welded joints at the rear wheel housing (from the inside)	Separate the spot welds between the rear wheel housing and the seat pan and the rear-window shelf with a spot weld cutter. Grind the away the MIG weld seams between the rear wheel housing and the B-post and side member.
6	Separate the spot welds on the side member Cut through the side member	Separate the spot welds between the side member and cross-member, engine mount and rear-axle cross member with a spot weld cutter. Cut through the side member near the rear-axle cross-member (before center of shock absorber mount) with the body panel saw.

Fitting rear body section into body on one side

Printed in Germany – VI. 1994

Fitting rear body section into body on one side

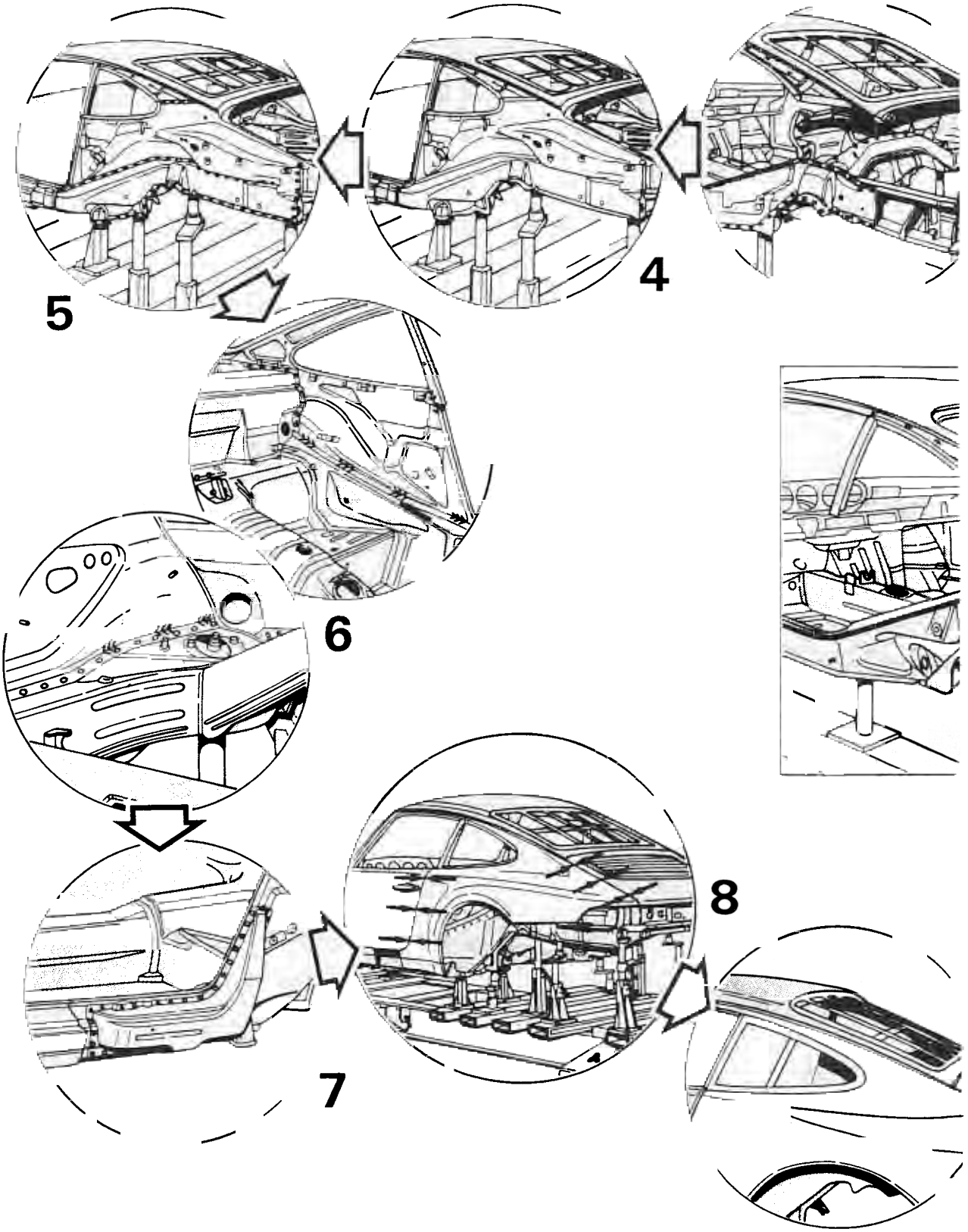

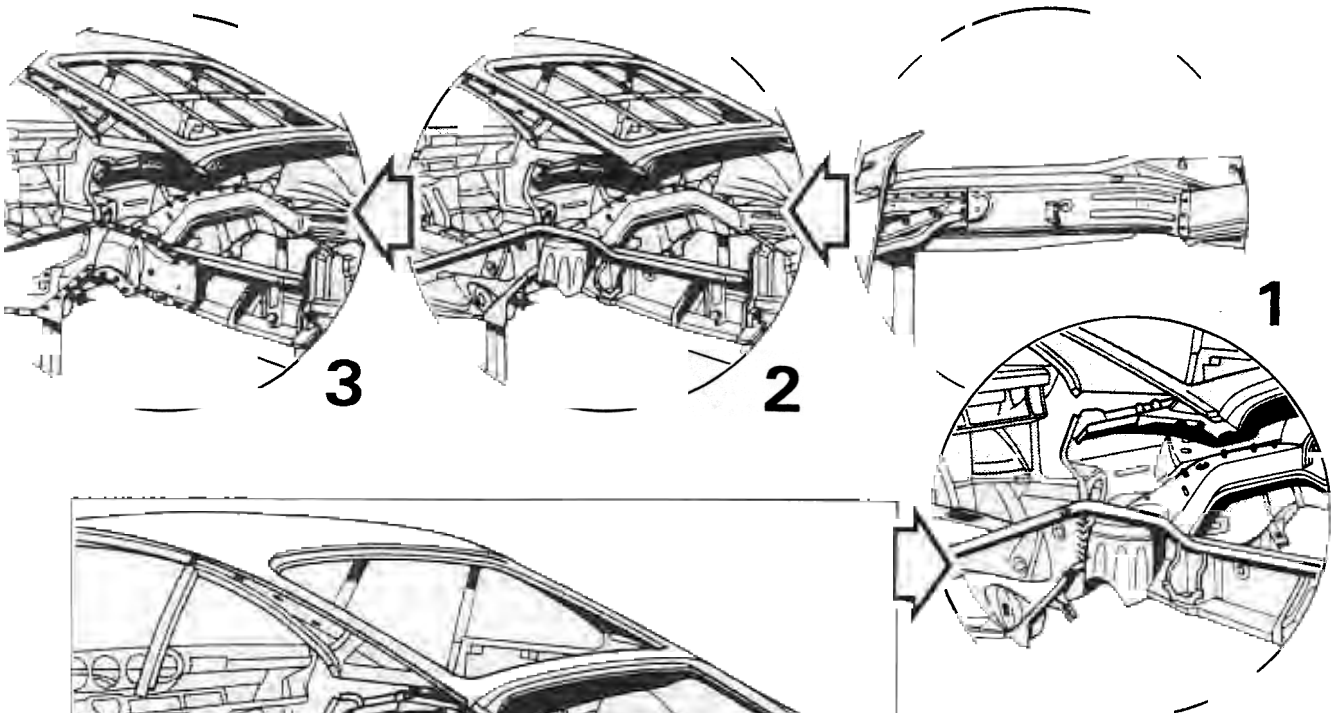
3
2
1

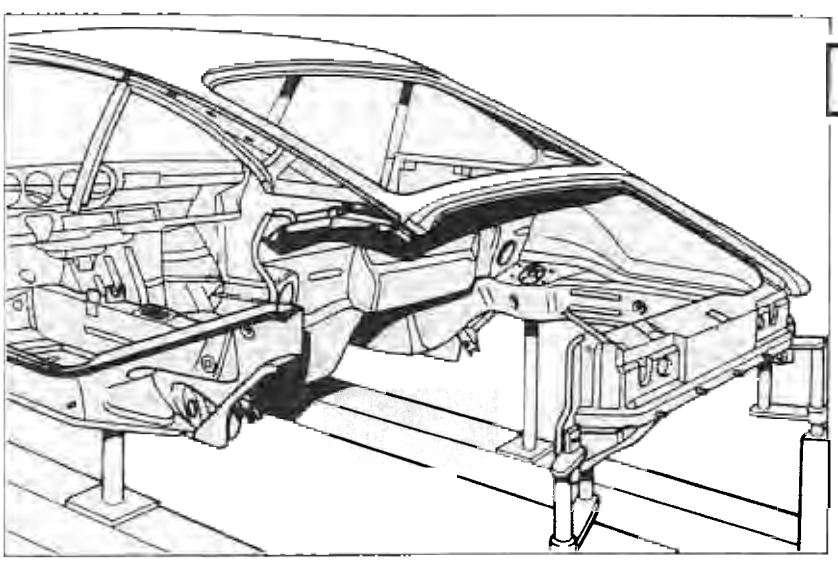

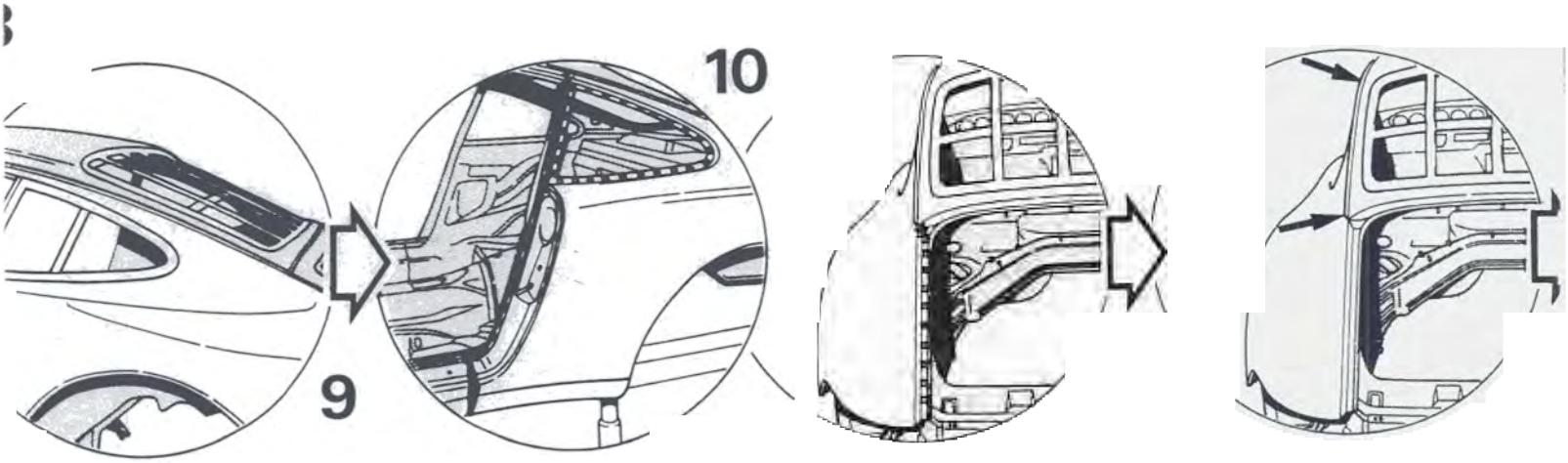
10
9

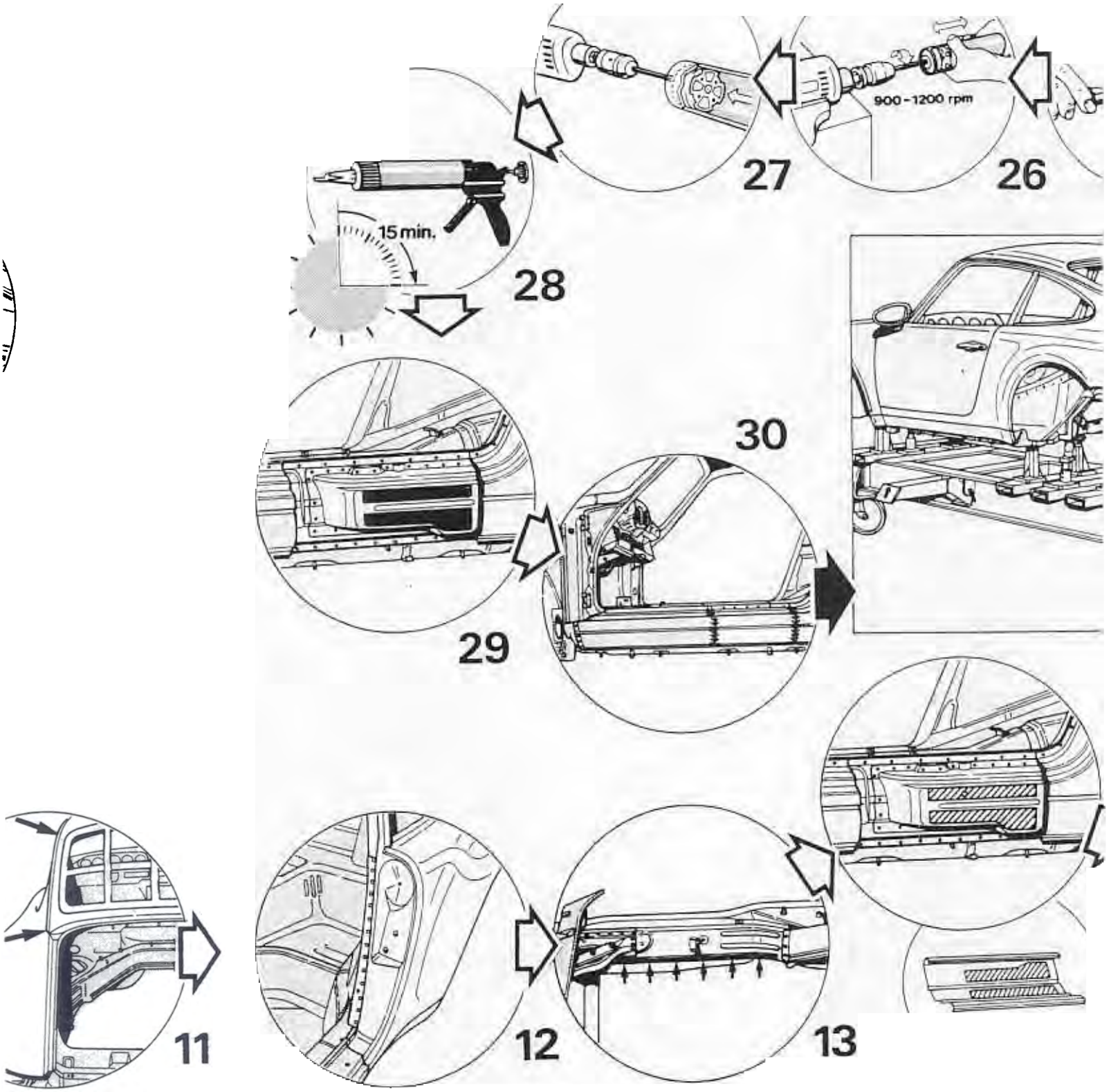

Printed in Germany – VI, 1994

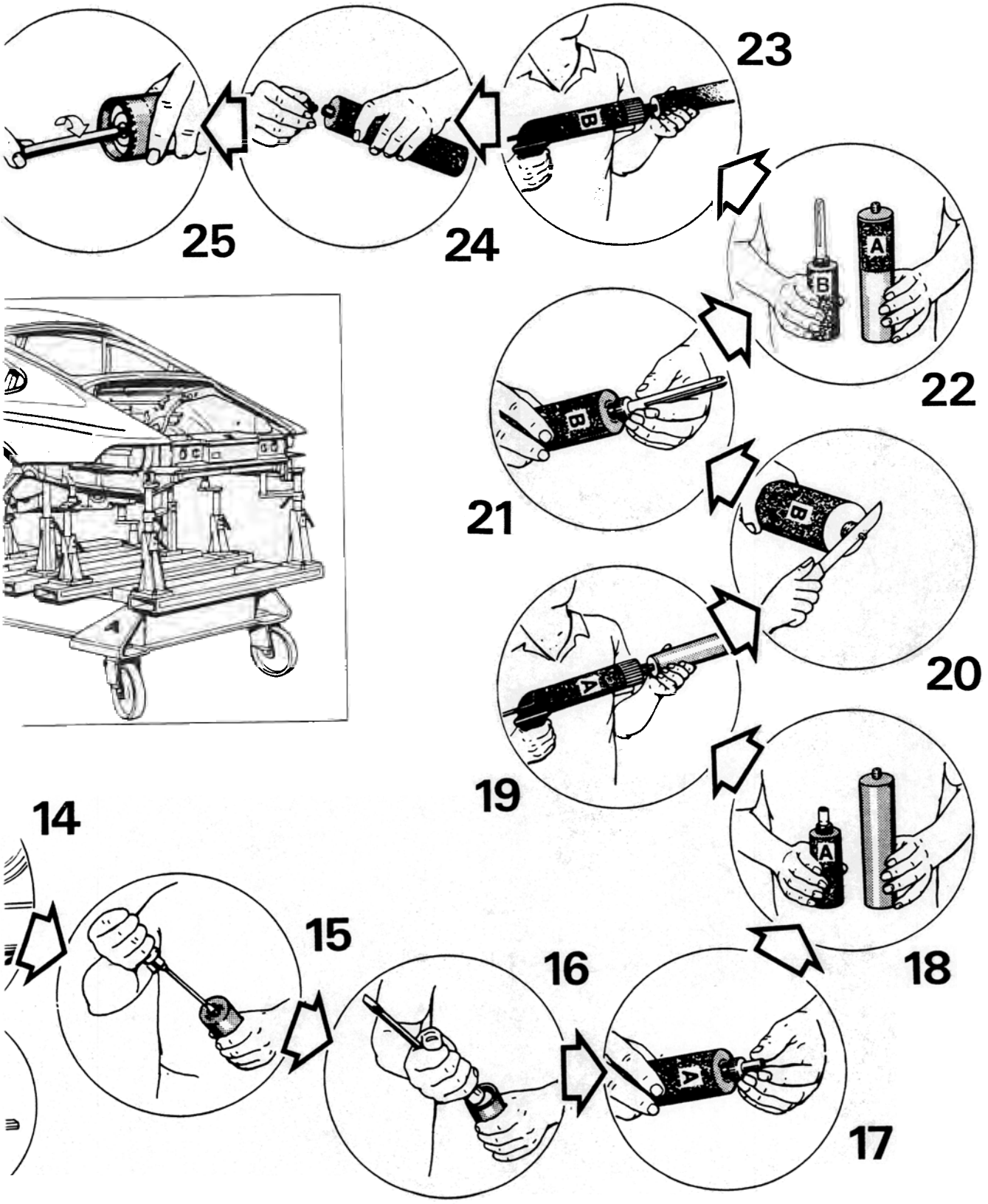

Printed in Germany – VI, 1994

Inserting rear body section into body at on side

No.	Operation	Instructions
	Clean the weld areas	Clean the body areas to be welded with a hot air blower or rotary brush to remove underseal, paint etc. Remove factory-applied primer with a rotary brush from the weld areas on the replacement parts.
1	Fit side member and rear axle cross member into body and weld in	Fit side member and rear axle cross member into body, secure with clamping tools and tack weld into position. Using the inert gas method, butt weld the replacement side member to the body side member with a full seam. Plug weld the side member to the cross member, engine mount and rear axle cross member. Note: The rear axle cross member may only be fitted together with a side member.
2	Insert special tool P 853	Place special tool P 853 (rear window template) into body cutout for rear window and secure with clamps to the spot weld flange.
3	Fit rear wheel housing into body and prepare for welding in	Trial-fit reinforcements to the side member, secure with clamping tools and tack weld.
4	Trial-fit rear wheel housing to body and prepare for welding in	Trial-fit rear wheel housing to body. Drill out the rear wheel housing ready for plug welding at points not accessible for spot welding.
5	Weld the rear wheel housing into the body (from the outside)	Secure the rear wheel housing with clamping tools and spot weld to the cross member, rear wheel housing reinforcement, side member (where accessible) and roof frame. Using the inert gas method, plug weld the rear wheel housing to the central side member in the areas of the side member and the rear wheel housing reinforcement not accessible for spot welding.

No.	Operation	Instructions
6	Weld the rear wheel housing to the body (from the inside)	MIG weld the rear wheel housing to the B-post, the rear wheel housing reinforcement and the side member with a discontinuous full seam. Plug weld the inner side panel to the rear window shelf and seat pan.
7	Fit the gusset plate, prepare for inserting and MIG weld	Fit the gusset plate to the rear wheel housing and the central side member. Drill out the gusset plate for plug welding. Plug weld the gusset plate to the rear wheel housing and the central side member, using inert gas.
	Solder lid release guide tube	Fit lid release guide tube and braze to lock pillar, rear wheel housing and cross member.
8	Fit side panel to body	Fit side panel to body. Install door and engine compartment lid to check body contours. Gaps between door and body and between rear lid and body must be parallel all round.
9	Insert special tool P 854	Place special tool P 854 (template for rear side window) in the rear side window body cutout and secure to spot weld flange with clamps.
	Tack weld side panel under inert gas	Using inert gas, tack weld the side panel to the door sill, B-post, rear side window spot-weld flange, rear wheel housing and cross-member. Take out special tool P 854 (rear side window template).
10	Spot weld and MIG weld side panel	Spot weld the side panel to the rear wheel housing, B-post and roof rail. MIG weld the side panel to the door sill (B-post area), outer roof sheet / rear wheel housing and cross member with a discontinuous full seam.
	Fold roof over into side panel	Fold side panel edge over web on roof.

No.	Operation	Instructions
	MIG weld the ends of the fold using inert gas.	MIG weld the side panel to the roof at the end of the fold in the B-post area running a full seam. MIG weld the side panel to the roof at the end of the fold in the rear lid area running a full seam. Take out special tool P 853 (rear window template). Grind the inert gas weld seams.
12	Spot weld the angled surround to the inner side panel	
13	Spot and tack weld the sectioned rail to the side member	Spot weld the sectioned rail to the side member/rear wheel housing spot weld flange on the inside, and tack weld under inert gas in the engine mount area.
	Fit door sill to body and prepare for inserting	Making a butt joint, fit replacement door sill to body door sill and side panel. Insert door sill into body and adjust according to door contours.
14	Remove door sill and prepare bonding area	Remove replacement door sill from body. Clean bonding areas at gusset plate and door sill and apply primer.

Preparing the bonding cartridge for application of adhesive

No.	Operation	Instructions
15	Open nozzle fitting of cartridge containing component A	Use a screwdriver to pierce the diaphragm in the nozzle fitting of the cartridge containing component A (C1).
16	Open flanged cover of cartridge containing component A	Use the screwdriver handle to pierce the flanged cover at the end of the cartridge containing component A (C1).
17	Screw filling nozzle onto cartridge containing component A	Screw filling nozzle (C10) onto cartridge containing component A (C1).
18	Place cartridge containing component A into bonding gun	Place cartridge containing component A (C1) into bonding gun (A). Remove screw-on cap from mixing cartridge (C3).
19	Press component A into mixing cartridge	Engage filling nozzle (C10) of cartridge containing component A (C1) into mixing cartridge (C3). Use bonding gun (A) to press component A into mixing cartridge (C3).
20	Open nozzle fitting of cartridge containing component B	Use a knife to cut off the tip of the nozzle fitting of the cartridge containing component B (C2).
21	Screw injector nozzle onto cartridge containing component B	Screw injector nozzle (C7) onto cartridge containing component B (C2).
22	Place cartridge containing component B into bonding gun	Place cartridge containing component B (C2) into bonding gun (A).
23	Press component B into mixing cartridge with component A	Insert injector nozzle (C7) of cartridge containing component B (C2) into mixing cartridge (C3). Use the bonding gun (A) to press component B (C2) into mixing cartridge (C3) with component A.
24	Close mixing cartridge	Pull injector nozzle (C7) out of mixing cartridge (C3) and close mixing cartridge with screw-on cap.

No.	Operation	Instructions
25	Screw mixing rod into mixing cartridge	Screw mixing rod (B) **manually** into internal threads of mixing disc of mixing cartridge (C3). Clamp the other end of the mixing rod in a power drill chuck. Fit the power drill in a suitable clamping device.
26	Mix component A and component B	Switch on drill (speed 900 - 1200 rpm) and move mixing cartridge 25 times from stop to stop. **Perform all 25 double strokes fairly rapidly!**
27	Engage mixing disc into piston	Pull back mixing cartridge until a rattling sensation is felt. Switch off drill and screw mixing rod out of mixing cartridge. This causes the mixing disc to engage into the piston of the mixing cartridge.
28	Place mixing cartridge into bonding gun	Place mixing cartridge with mixed 2-pack window adhesive into bonding gun. Screw application nozzle (C8) onto mixing cartridge.

Caution: Observe open time of 15 minutes!

Open time is the time available for application of the adhesive and for fitting the outer side member into the body.

No.	Operation	Instructions
29	Apply adhesive to gusset plate	Apply 2-pack adhesive with bonding gun to entire gusset plate surface to a thickness of 4 mm. Do not apply any adhesive to the outer side member to side panel welding area.
30	Weld in outer side member	Fit outer side member to body and adjust to contours of door. MIG-weld spare outer side member to body outer side member running a butt full seam. Plug-weld outer side member to fender mating panel and closing panel using MIG equipment. Spotweld outer side member to inner side member and center side member (floorpan).

53 02 49 Reworking rear bodywork — Cabriolet

Repairing incipient cracks between rear center panel and rear side panels

(Technical modifications were introduced in the course of production in August 1994.)

Note: Following the repair of the incipient cracks, the joint between rear side panel and rear center panel is no longer visible. Both sides of the vehicle should therefore be reworked.

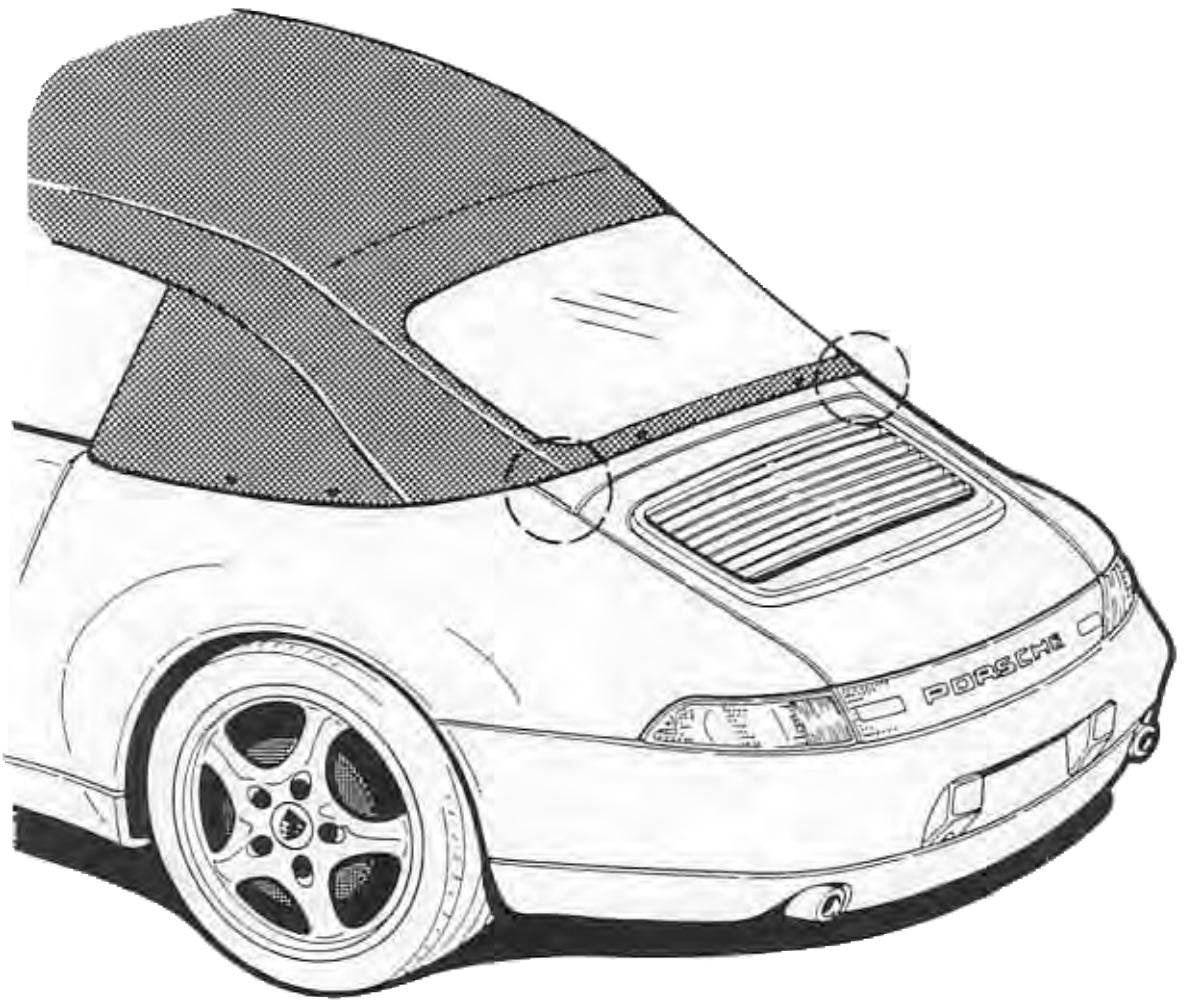

2074 - 53

Repairing incipient cracks between rear center panel and rear side panels

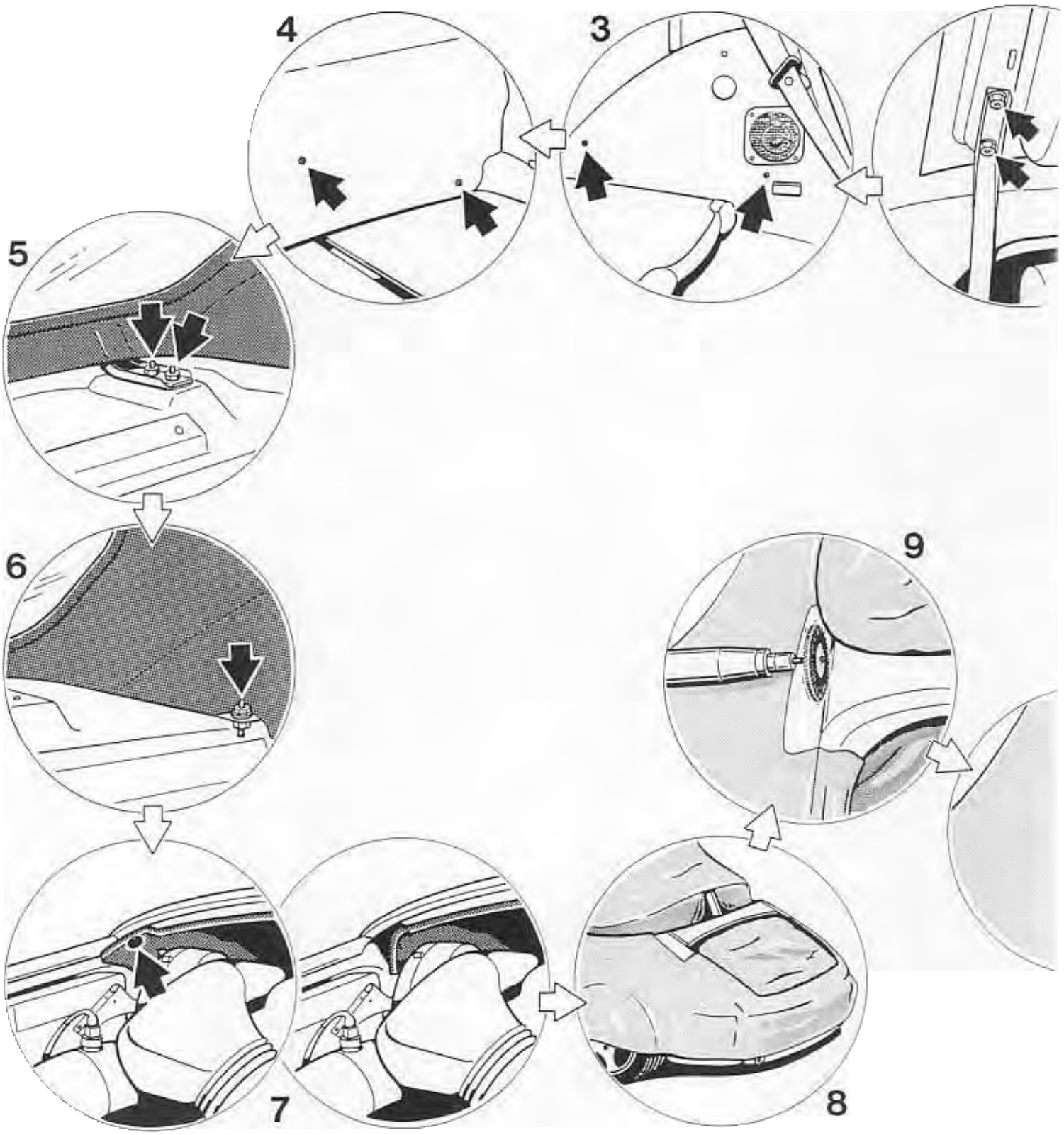

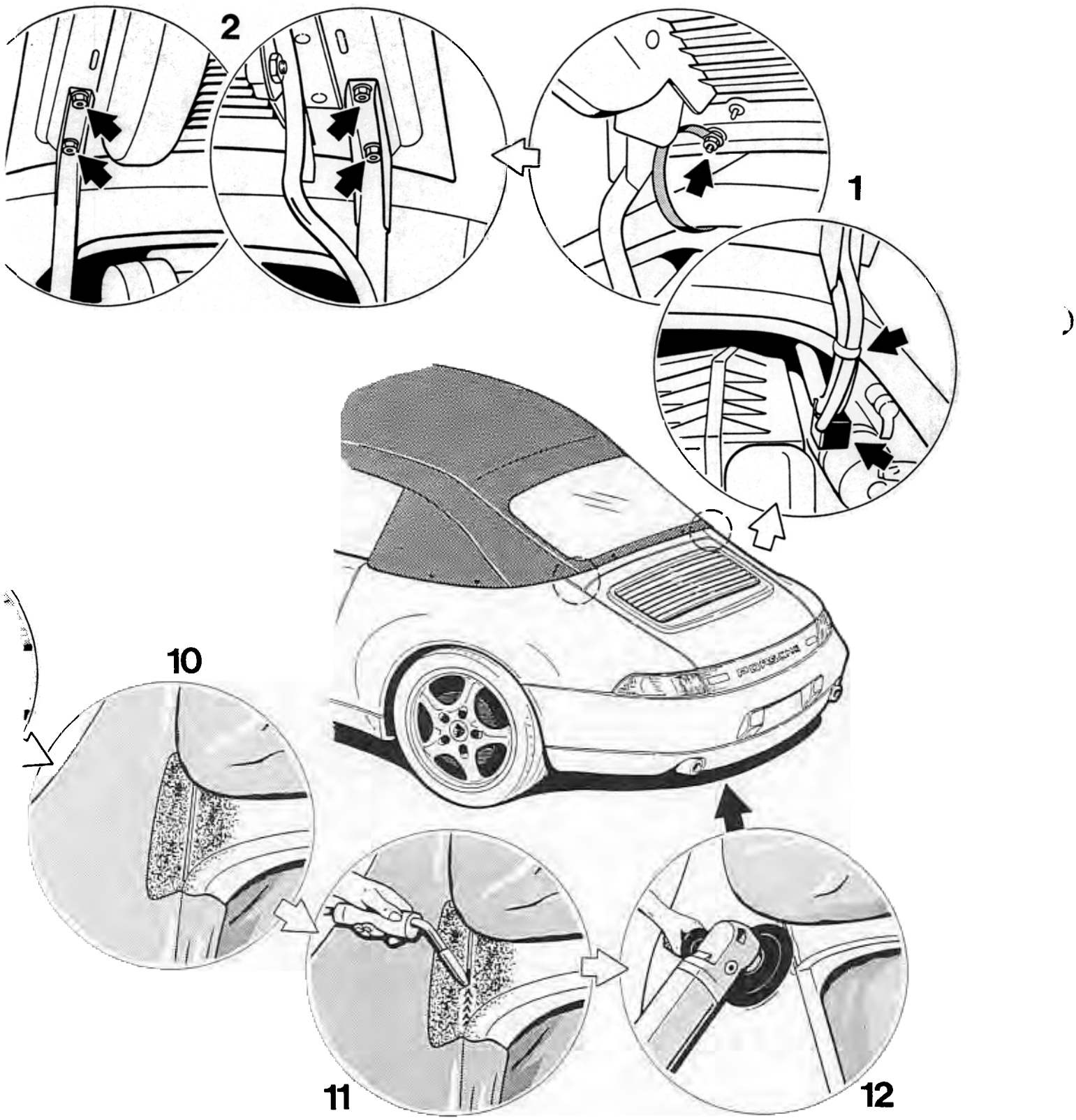
2
1
10
11
12

Repairing incipient cracks between rear center panel and rear side panels

In order to repair the incipient cracks between the rear center panel and rear side panels, the engine compartment lid, the convertible top, the rear wheel houses and the engine compartment insulation must be partially dismantled.

No.	Operation	Instructions
	Unlock rear lid	
	Disconnect electrical cables from rear lid	Unclip connector cap from wire harness, disconnect connector and pull cable holder off hinge. Unscrew fastening nut of ground connection cable.
2	Remove rear lid	Unscrew mounting screws. Lift lid off vehicle and place it on a clean, soft surface.
	Unlock convertible top	
3	Remove side wall trim panels	Remove mounting screws and press studs of side wall trim panels. Disconnect plugs from loudspeakers and take side wall trim panels out of vehicle.
4	Remove rear wall trim panel	Remove mounting screws of rear wall trim panel. Pull rear wall trim panel forward and take it out of vehicle.
5	Disconnect rear tack strip	Unscrew fastening nuts of holders from rear tack strip.

No.	Operation	Instructions
6	Disconnect tack strip at sides	Press roof liner upwards and outwards at mounting points and unscrew mounting nuts of tack strip.
	Remove rear left and right wheelhousing trims	
7	Disconnect right and left engine compartment insulation	Unscrew retaining press stud and disconnect engine compartment insulation from body.
	Lift convertible top off body at rear	Lift convertible top off body at rear and fix it in this position by inserting a wooden wedge for example.
8	Position covers	Cover convertible top, right rear side panel, left rear side panel, lights and rear spoiler.
9	Remove paint from joints	Remove paint to bright metal in the area of the joints between rear center and side panels using a rotary brush.
10	Apply heat transfer paste	To prevent thermal warping, apply heat transfer paste to rear center and side panels. Do not apply paste to joints!
11	Weld joints	Weld joints (full weld) by inert arc welding.
	Remove heat transfer paste	
12	Grind welds	Grind welds to contour of body using an angle grinder.

No.	Operation	Instructions
	Repair damaged underseal.	Apply underseal in accordance with instructions in painting manual, Section L 4, Underseal – material and application data.
	Paint repaired body section.	Paint in accordance with painting manual, Section L4 – material and application data and Section L5 – working procedures/methods, – blending technique.
	Re-assemble vehicle	Mount left and right engine compartment insulation with retaining press studs. Attach tack strip of convertible top at sides and rear. Install rear and side wall trim panels. Install rear lid and connect electrical cables. Install left and right rear wheel housing trims.

Body paint col rs begi ng with 994 Model Year

tandard rs:		peciai colors	
randprix white	908	Polar silver metal	92E
Grandprix hite	92R*	olar silver metal	2M*
Black	47	Midnight blue metallic	37W
Black		Midnight blue metallic	39C*
uards red	80K	Black metall	746
uards red	84A	Black metall	744
Rivi blue	39	Slate gray metallic	
Rivi blue	3AG	Slate gray metallic	23F*
Amaranth violet	39D	ris blue metallic	39N
Amaranth violet	3AH*	ris blue metallic	39V*
Speed yellow	2G	Av rine metall	39R
Speed yellow	2H*	Aventurine metall	39S

Water-base paints

Body paint colors beginning with 1995 Model Year

Standard colors:

Grandprix white	908
Grandprix white	92R*
Black	747
Black	741*
Guards red	80K
Guards red	84A*
Riviera blue	39E
Riviera blue	
Amaranth violet	39D
Amaranth violet	3AH*
Speed yellow	12G
Speed yellow	12H*

Special colors:

Polar silver - metallic	92E
Polar silver - metallic	92M*
Midnight blue - metallic	37W
Midnight blue - metalic	39C*
Black - metallic	746
Black - metallic	744*
Slate gray - metallic	22D
Slate gray - metallic	23F*
Iris blue - metallic	39N
Iris blue - metallic	39V*
Aventurine green - metallic	39R
Aventurine green - metallic	39S*
Arena red metallic	84R
Arena red metallic	84S*

= Water-base paints

Body paint colors beginning with 1996 Model Year

Standard colors:

Grandprix white	908
Grandprix white	92R*
Black	
Black	
Guards red	80K
uards red	84A
Speed yellow	2G
Speed yellow	2H*
Blue turquoise	3AR
Blue turquoise	3AS*

Special colors

Polar silver metallic	92E
Polar silver metallic	92M*
Midnight blue metall	37W
Midnight blue metalic	39C*
Black metall	746
Black metall	'44'
Slate gray metallic	22D
Slate gray metallic	23F*
ris blue metallic	39N
Iris blue metallic	39V*
Aventurine green metall	39R
venturine green metallic	39S*
red metallic	84R
Arena red metallic	84S*
Turquoise metallic	25C
urquoise metallic	25D*

Water-base paints

61 01 19 Removing and installing convertible top

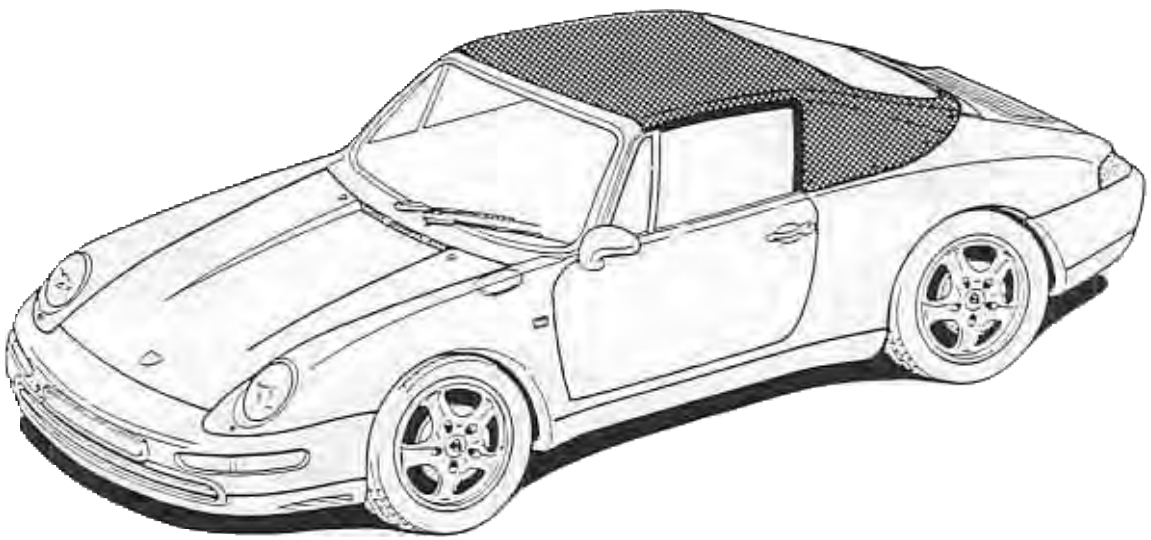

1891-61

61 01 19 Removing and installing convertible top

Removing convertible top

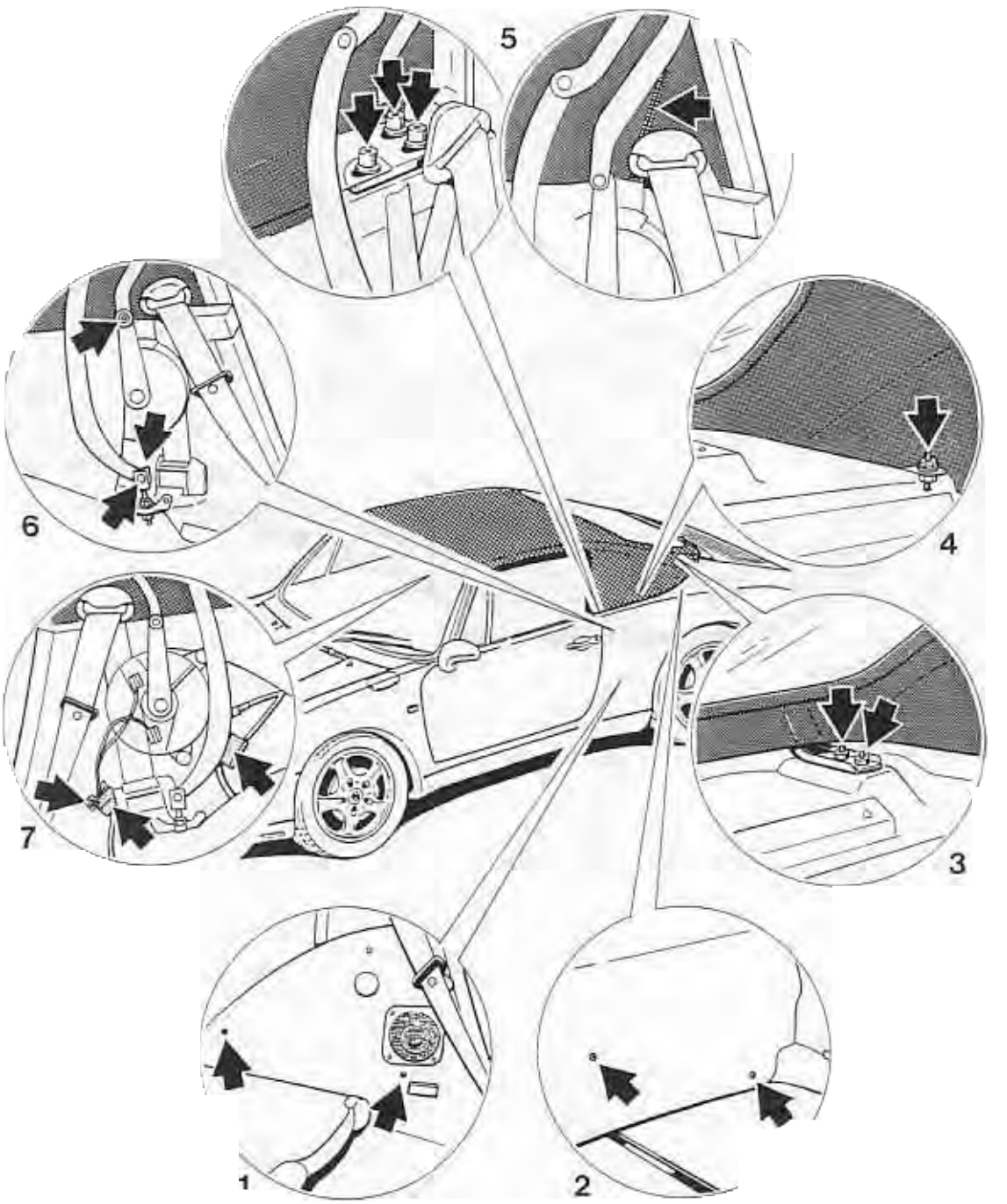

61 01 19 Removing and installing convertible top

Removing convertible top

No.	Operation	Instructions
	Unlock convertible top	
1	Remove side wall trim panels	Remove fastening screws and press studs of the side wall trim panels. Disconnect the loudspeaker connector and remove the side wall trim panels from the vehicle.
2	Remove rear wall trim panel	Remove the fastening screws of the rear wall trim panel, pull the rear wall trim panel forwards and remove it from the vehicle.
3	Release tack strip at rear	Remove the fastening screws of the holder from the tack strip.
4	Release tack strip at the sides	Press the roof liner upwards and outwards at the mounting points and unscrew the fastening nuts of the tack strip.
5	Release mounts and tack strip at the front	Open roof liner zip fastener and remove screws of convertible top mounts and tack strip at the front.
6	Release links and pushrods	Remove tab washers and bolts between links and joint yokes. Remove the headless screws connecting the transmission arm to the pushrods.
7	Disconnect electrical systems	Unscrew the connector for the microswitches from the body. Disconnect the connectors for the microswitches and convertible top locks. Lift convertible top off vehicle.

61 01 19 Removing and installing convertible top

Installing convertible top

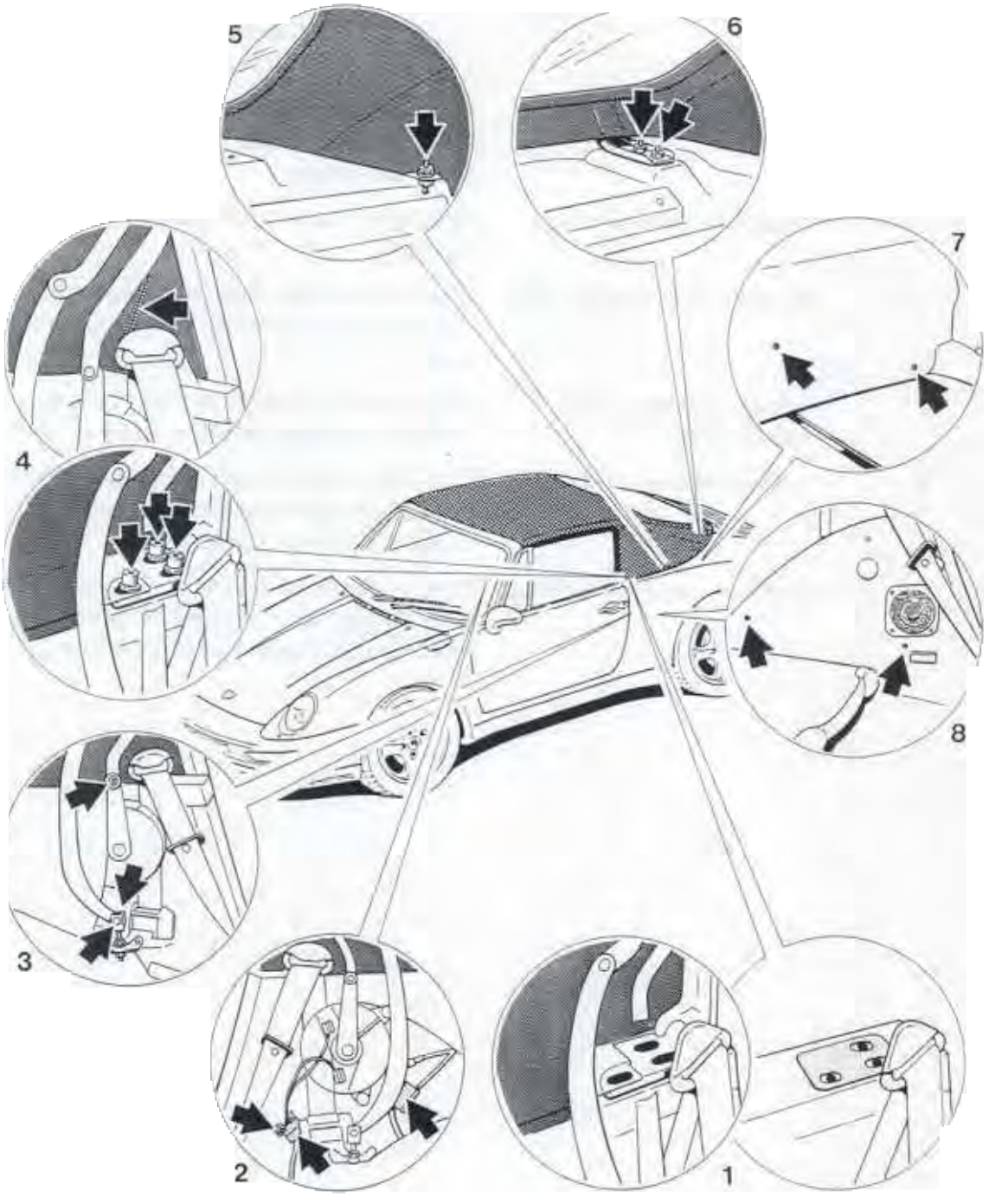

61 01 19 Removing and installing convertible top

Installing convertible top

Before installing the convertible top, check and if necessary replace the tack strip seal.

No.	Operation	Instructions
1	Place top on vehicle	Position the top on the mounting points on the vehicle. Use shims under the mounts as required to adjust the height of the top.
2	Connect electric systems	Connect the connectors for the microswitches and locks and attach the conector for the microswitches to the body.
3	Fasten links and pushrods	Guide the links between the joint yokes, insert the bolts and fix them in position with the tab washers. Attach the pushrods to the transmission frame using the headless screws.
4	Fasten mounts and tack strip at front	Fasten the mounts and the tack strip at the front to the mounting points on the B-pillars using M 8 x 25 socket head screws with washers. The top can be adjusted in the lengthwise direction at these points. Tightening torque 20 Nm (15 ftlb.).
5	Fasten tack strip at sides	Screw the flanged M 6 nuts to the stud bolts. The height of the top in relation to the body can be adjusted at these points.
6	Fasten tack strip at rear	Fasten the tack strip on the holders to the body with washers and M 6 nuts. Tightening torque 9 Nm (7 ftlb.). Lock top. Any adjustments which may be required can be carried out at the mounting points on the bodywork.
7	Install rear wall trim panel	Push the rear wall trim panel under the tack strip and fasten it to the bodywork at the bottom using the fastening screws.
8	Install side wall trim panels	Connect cables to loudspeakers. Push the side wall trim panels between the brackets and the side parts and fasten them to the bodywork using the fastening screws.

61 28 55 Replacing convertible top fabric and roof liner

The following body spare parts are needed for replacing the convertible top fabric and the roof liner:

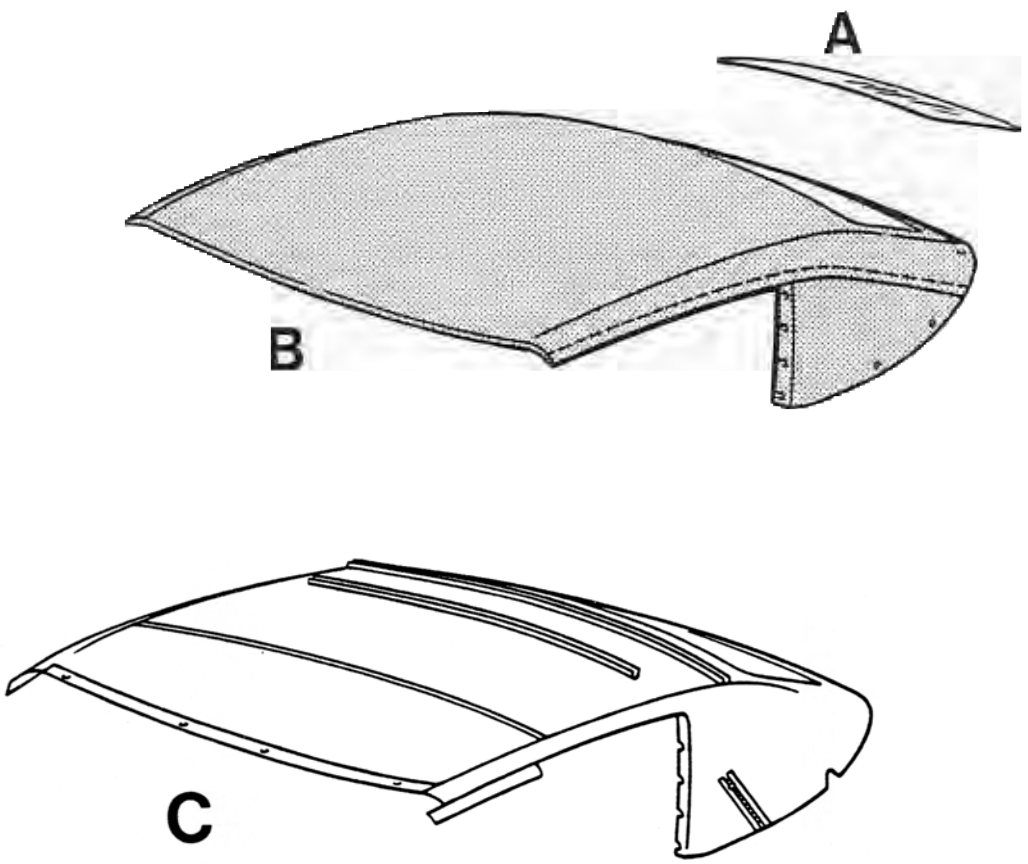

A rear window

convertible top fabric

C roof liner

Replacing convertible top fabric and roof liner

Removing convertible top fabric and roof liner

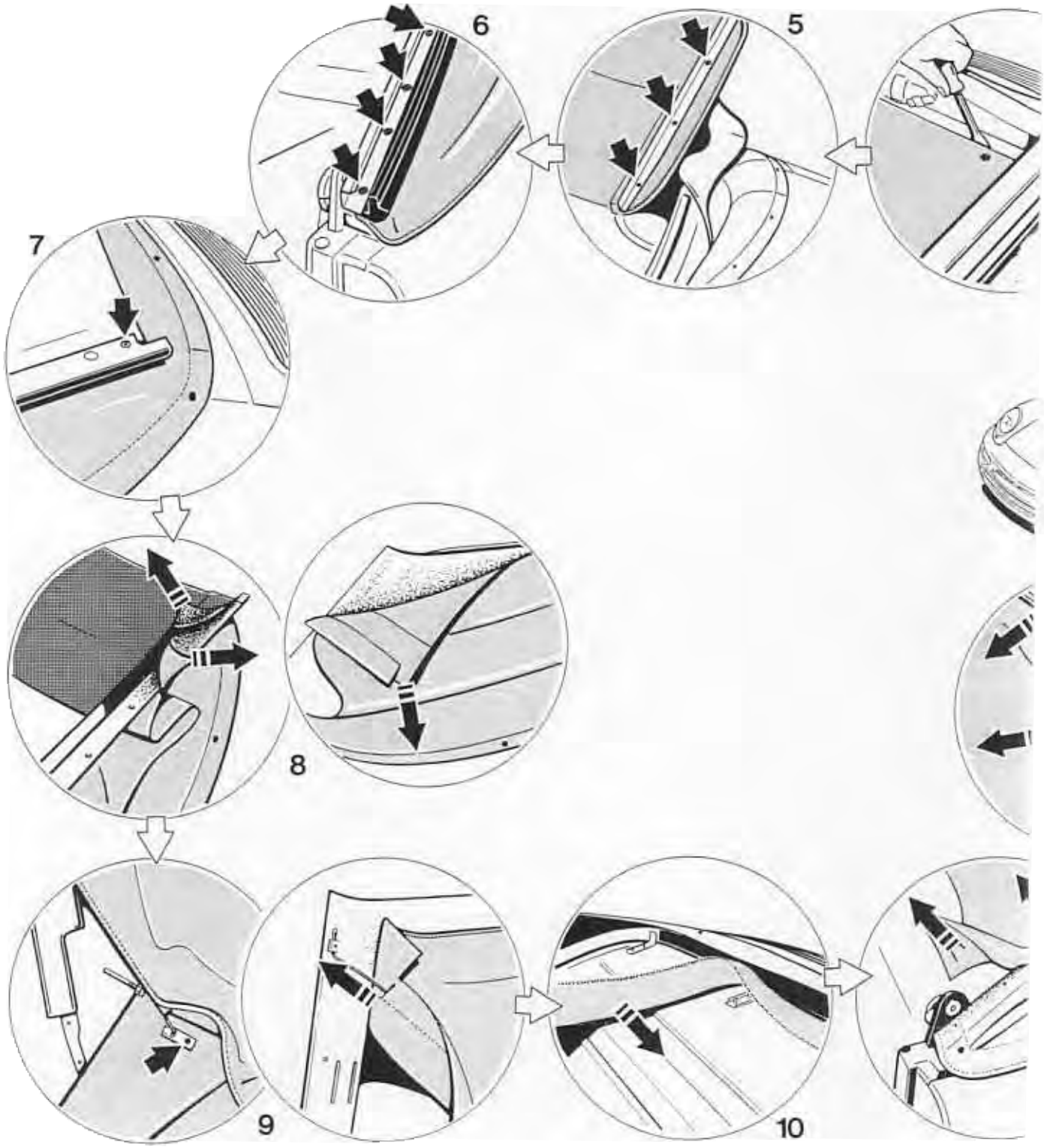

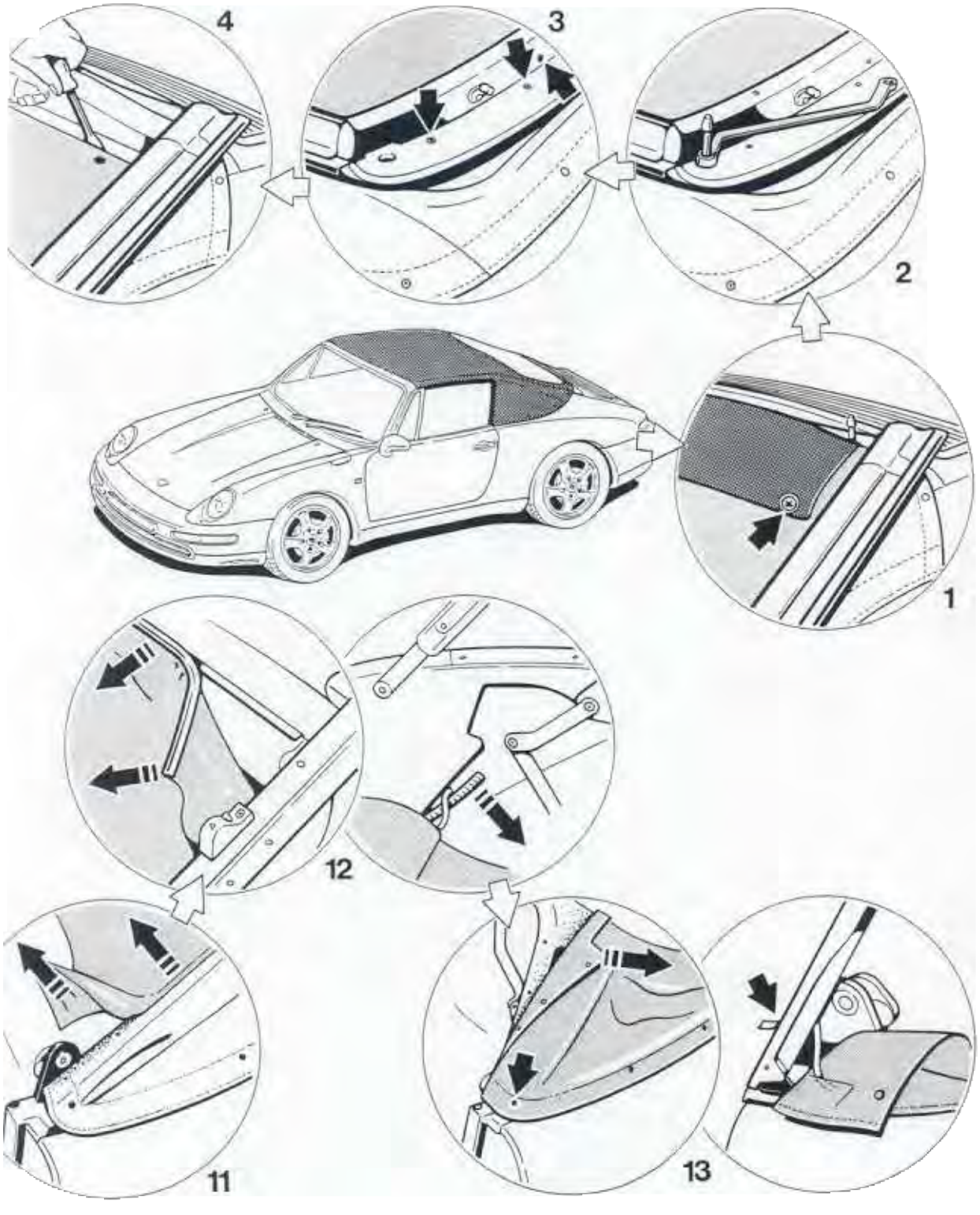
4
3
2
1
12
11
13

No.	Operation	Instructions
9	Remove cover trims and tensioner rope	Unscrew fastening screws for tensioner ropes, cover trims and roof liner inside, hexagonal nuts and washers and pull tensioner ropes out of convertible top.
	Remove side wall and rear wall trim panels	
	Loosen tack strip at rear, sides and front	
10	Open zipper	Open zipper between rear window and roof liner. Pull roof liner away from Velcro strip under tack strip.
11	Disconnect roof liner from B-pillars	Pull roof liner away from adhesive bonding points in area of B-pillar. Take rubber strip off pushrods.
12	Remove roof liner from main bow	Pull push-in sections on roof liner from edges of main bow and take roof liner out of vehicle.
13	Disconnect top fabric from main bow	Unscrew front Tenax bottom part from main bow. Disconnect fabric from main bow at adhesive bonding points. Drill out rivets of tensioner strip from inside and lift convertible top fabric with tack strip off vehicle.

No.	Operation	Instructions
9	Remove cover trims and tensioner rope	Unscrew fastening screws for tensioner ropes, cover trims and roof liner inside, hexagonal nuts and washers and pull tensioner ropes out of convertible top.
	Remove side wall and rear wall trim panels	
	Loosen tack strip at rear, sides and front	
10	Open zipper	Open zipper between rear window and roof liner. Pull roof liner away from Velcro strip under tack strip.
11	Disconnect roof liner from B-pillars	Pull roof liner away from adhesive bonding points in area of B-pillar. Take rubber strip off pushrods.
12	Remove roof liner from main bow	Pull push-in sections on roof liner from edges of main bow and take roof liner out of vehicle.
13	Disconnect top fabric from main bow	Unscrew front Tenax bottom part from main bow. Disconnect fabric from main bow at adhesive bonding points. Drill out rivets of tensioner strip from inside and lift convertible top fabric with tack strip off vehicle.

Installing convertible top fabric and roof liner

Installing convertible top fabric and roof liner

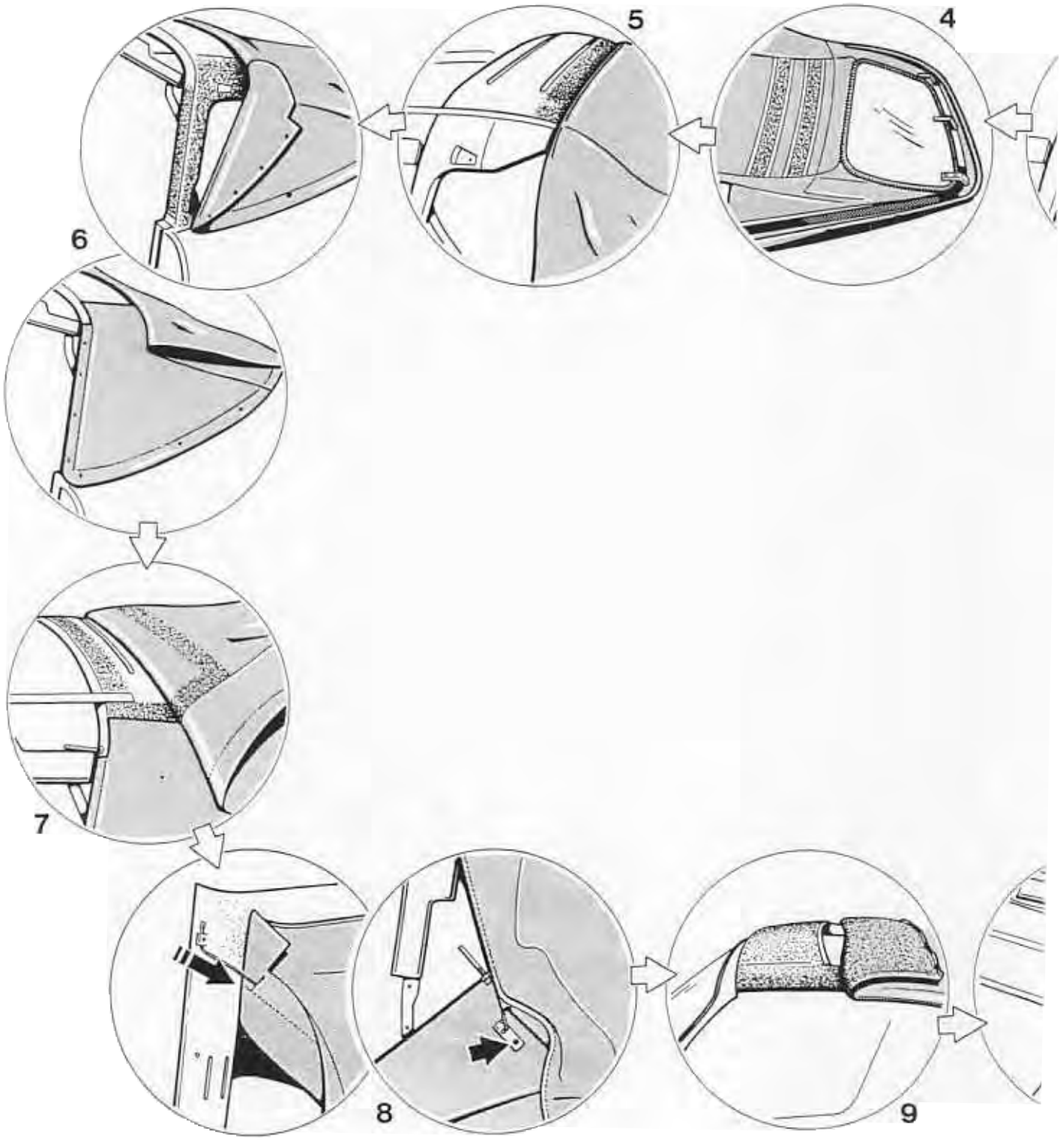

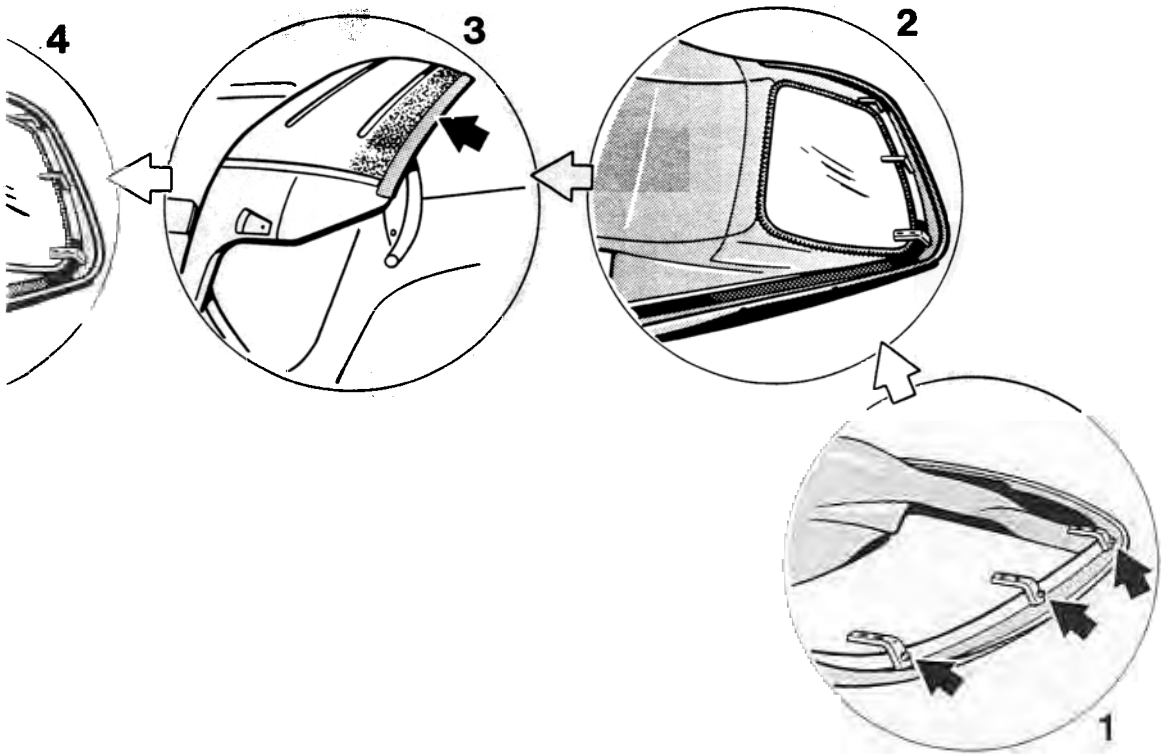
4
3
2
1

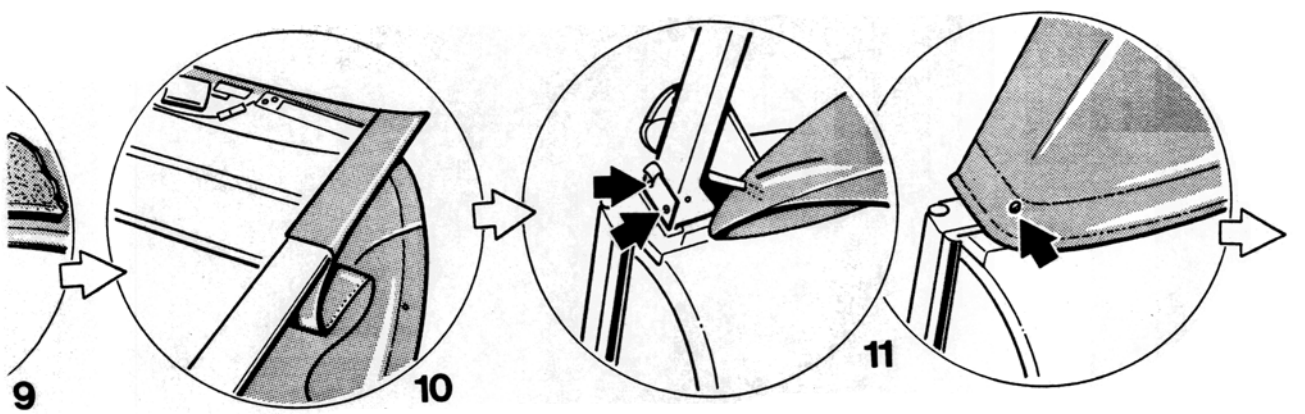
9
10
11

Installing convertible top fabric and roof liner

Installing convertible top fabric and roof liner

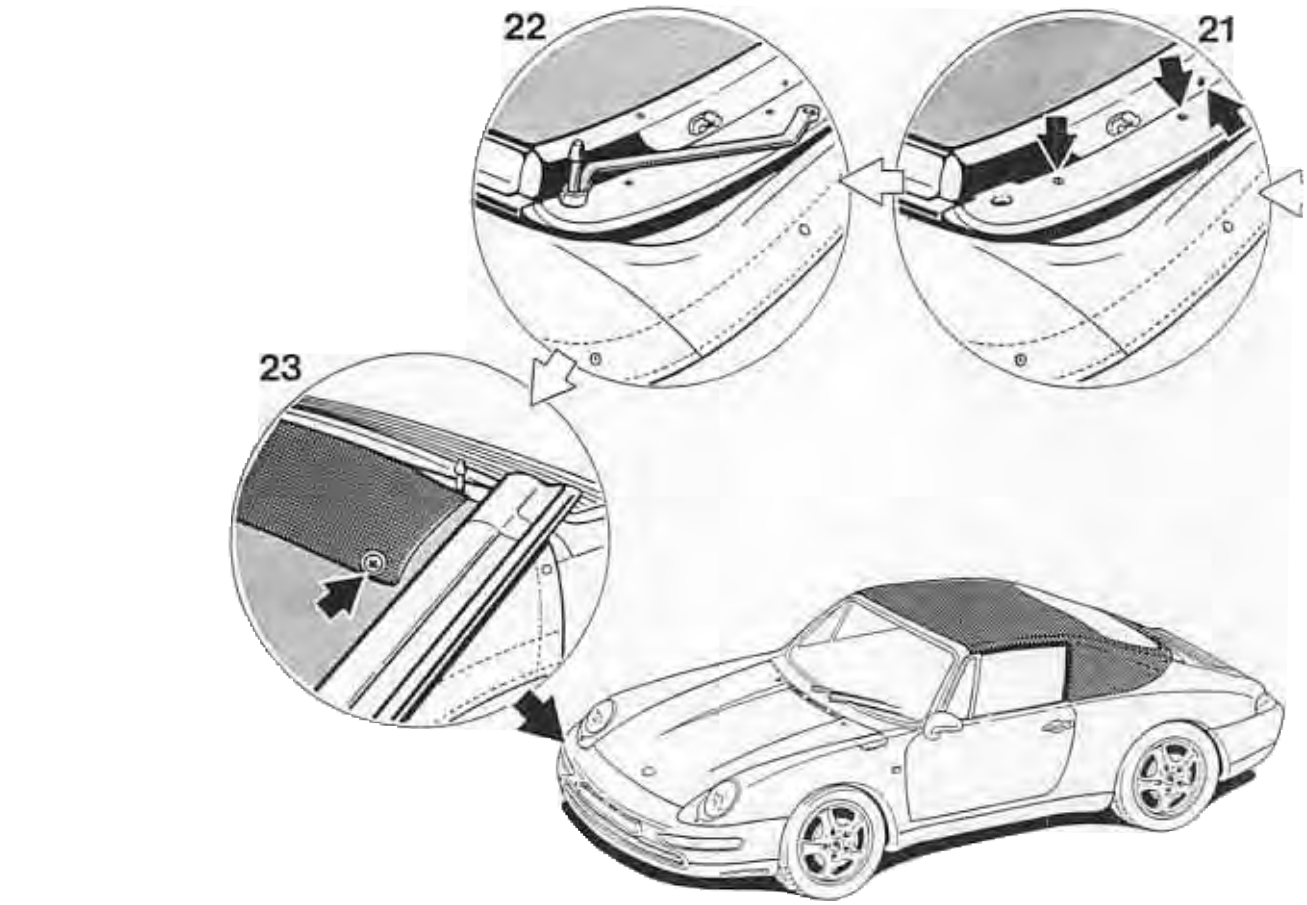

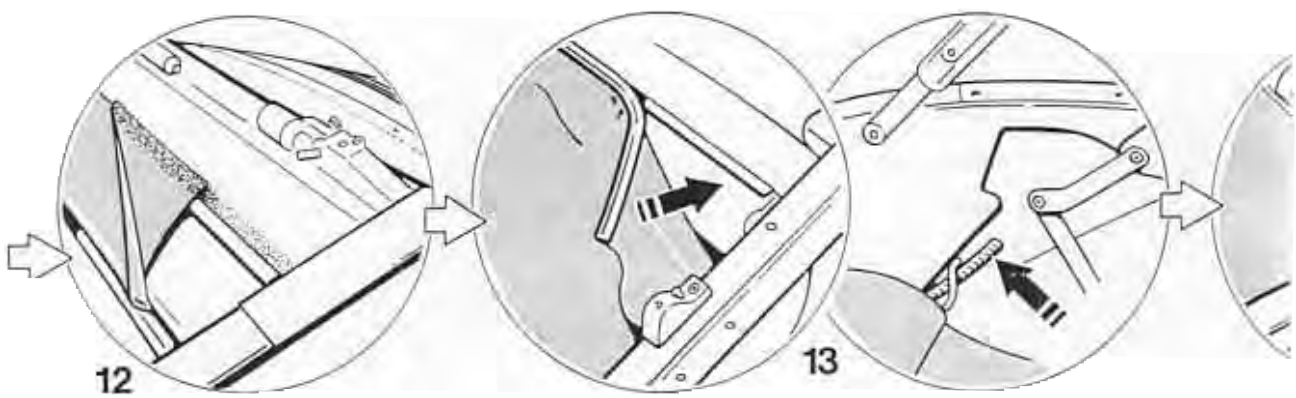

Printed in Germany - X, 1994

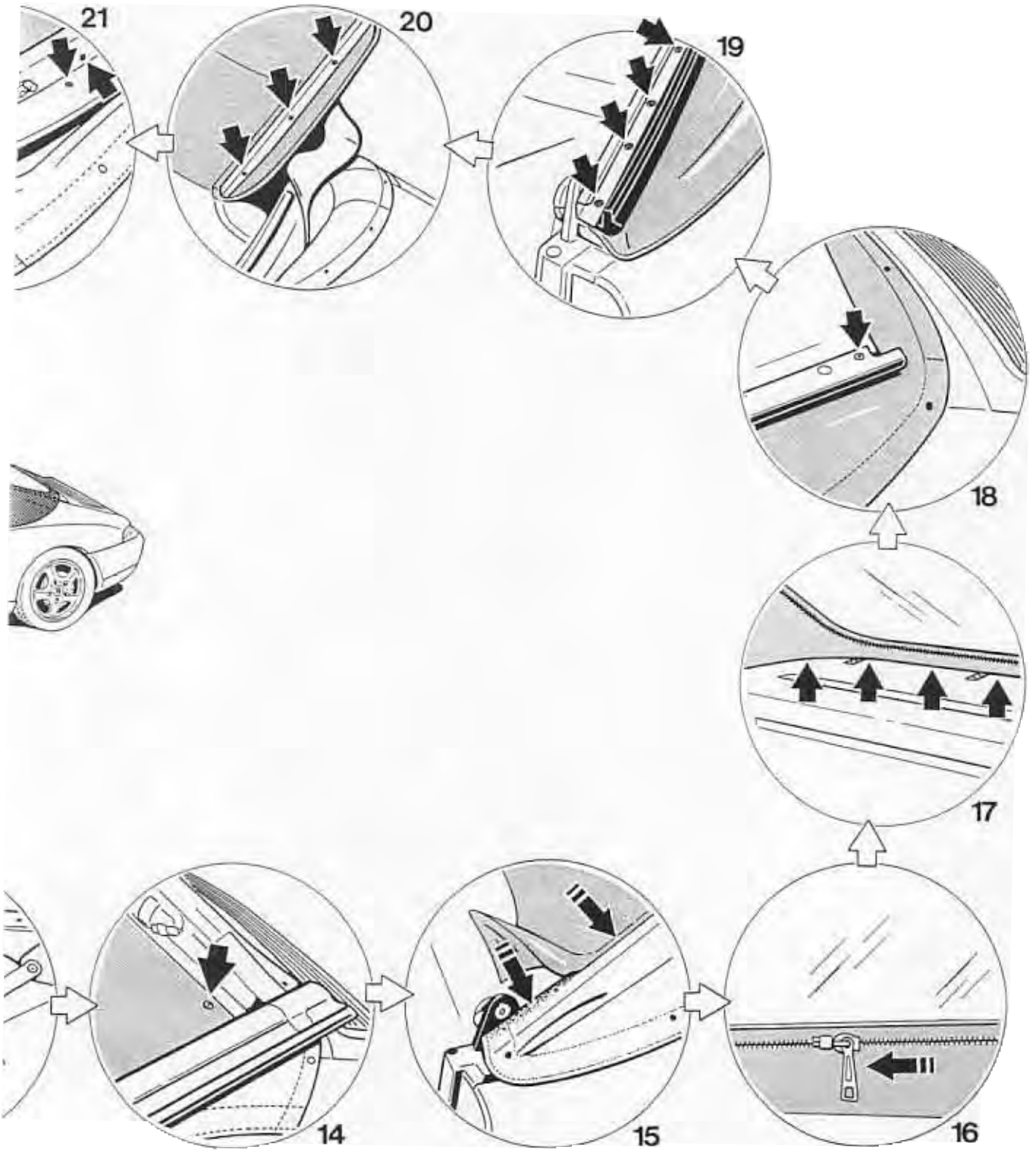
21
20
19
18
17
16
15
14

Installing convertible top fabric and roof liner

Before installing the convertible top fabric and the roof liner, the adhesive bonding points must be cleaned.
Check all screws for tightness. If necessary, tension the auxiliary bow.

No.	Operation	Instructions
1	Install holders on tack strip	Screw the three holders to the tack strip.
2	Install rear window	Zip the rear window into the convertible top fabric (use a provisional window, if one is available).
3	Prepare main bow	Cover the main bow with an adhesive tape, thickness about 1 cm, and apply adhesive up to the first reinforcement rib. Then remove adhesive tape.
4	Prepare convertible top fabric	Apply adhesive to the specified marking lines on the fabric, with the fabric not installed.
	Position fabric	Position fabric with tack strip on vehicle. (Only place it on the mounting points.)
5	Attach fabric to main bow	Open convertible top about 40% and position fabric with longitudinal seams at main bow, observing the markings.
6	Attach fabric to main bow at sides	Apply adhesive to fabric and main bow and bond fabric to main bow. Close the convertible top. If there is insufficient tension on the fabric, loosen adhesive bond and reposition fabric.
7	Attach fabric to main bow at top	Open convertible top about 10%. Apply adhesive to main bow at front and bond fabric to main bow.

No.	Operation	Instructions
8	Insert and fasten tensioner ropes	Open top about 50%. Push tensioner ropes through fabric and attach the eyes with cover trims to the main bow using the cross-head screws.
9	Attach fabric to outer roof frame	Open top about 20%. Apply adhesive to roof frame and fabric. Bond fabric to roof frame at the marking (line).
10	Attach fabric to inner roof frame	Open top. Apply adhesive to roof frame and fabric. Bond fabric to roof frame.
11	Mount rubber strip, lower part of Tenax, seal and plate	Pull rubber strip around main bow and attach it to seal on main bow with plate. Fasten lower part of Tenax to main bow.
12	Mount tensioner cloth	Place tensioner cloth around auxiliary bow, apply adhesive to roof frame and bond tensioner cloth to roof frame, applying slight tension.
	Attach tack strip	Tighten tack strip mountings.
13	Fasten roof liner to main bow	Push push-on sections of roof liner onto edges of main bow.
14	Fasten roof liner to roof frame	Fasten roof liner to roof frame using new rivets.
15	Fasten roof liner to B-pillar	Apply adhesive to roof liner and main bow. Bond roof liner to main bow. Fasten roof liner to screw points of ropes with washers and nuts from the inside.
16	Close roof liner	Attach roof liner to rear window using zipper.

No.	Operation	Instructions
17	Fasten roof liner to tack strip.	Fasten roof liner to Velcro strip on inside of tack strip.
18	Install rain channels.	Rivet rain channels to roof frame at front and rear.
19	Install roof frame seals.	Attach roof frame seals and retaining rails to roof frame using mounting screws.
20	Install B-pillar seals.	Attach B-pillar seals and retaining rails to B-pillars using mounting screws.
21	Install cover trim.	Fasten cover trim to roof frame with mounting screws.
22	Install fixing pegs.	Insert fixing pegs in roof frame and tighten with ring wrench.
23	Install upholstered trim.	Fasten upholstered trim to roof frame with mounting screws.
	Weld rear window into place.	See description in 911 Carrera (993) Repair Manual, pages 64 - 25 to 64 - 30, "Removing and installing flexible rear window of Cabriolet."

63 15 19 Removing and installing front spoiler

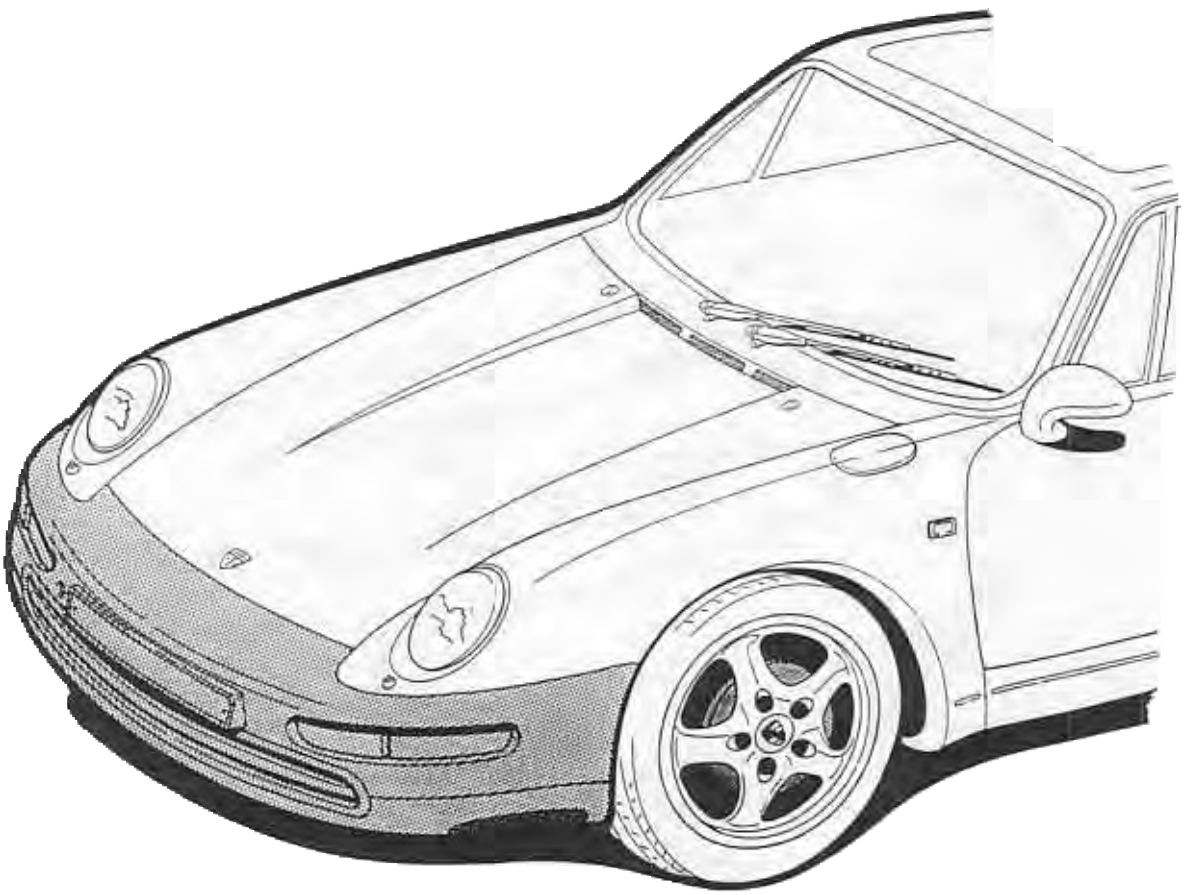

63 5 Removi an nstalling front spoiler

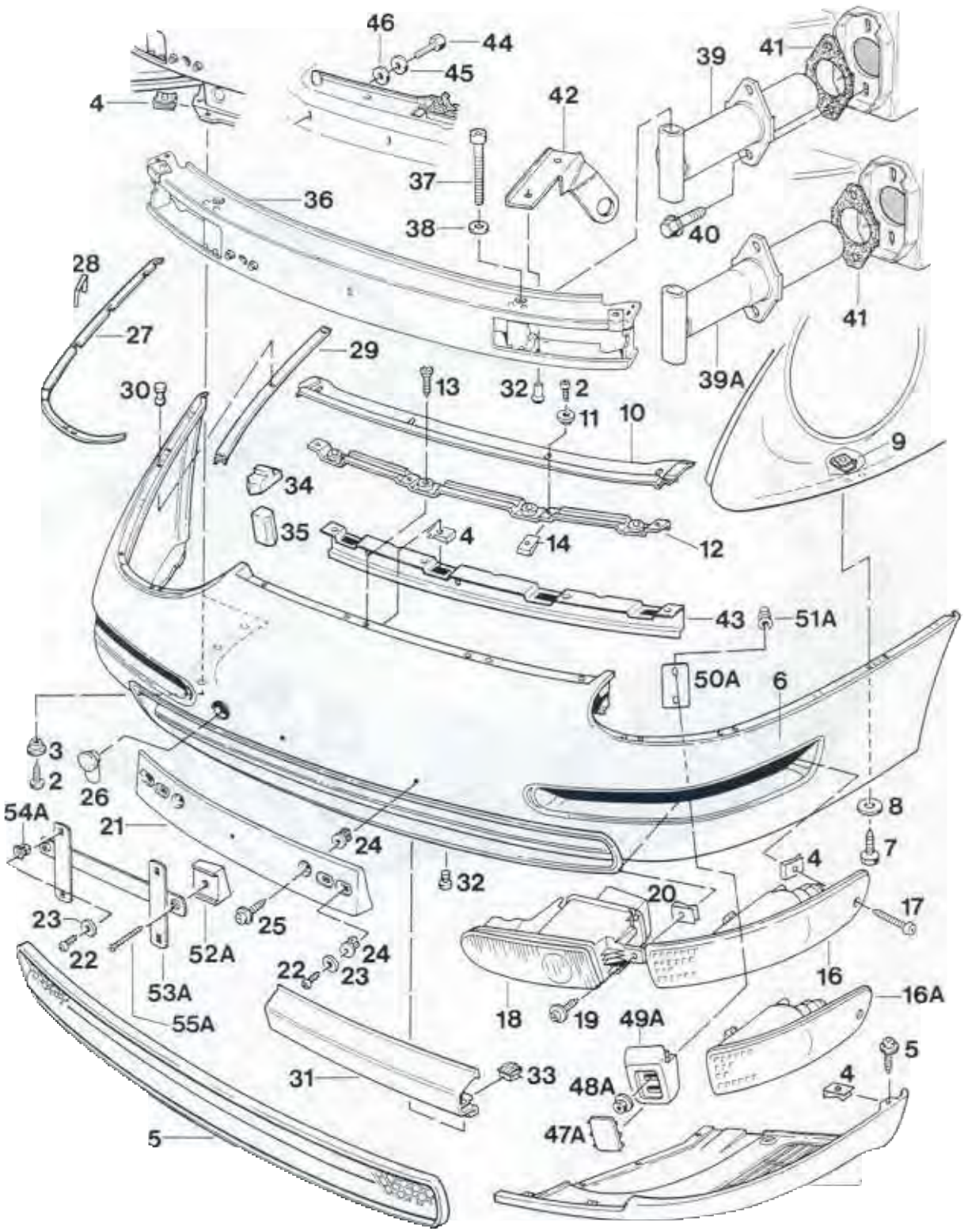

63 15 19 Removing and installing front spoiler

Undo the wheel housing liners partially before removing the front spoiler!

No.	Designation	Qty.	Note: Removal	Installation
1	Spoiler, lower	2	Unclip from spoiler	Clip into spoiler
2	Self-tapping screw B 4.8 x 16	6		
3	Spacer	6		
4	Sheetmetal nut B 4.8	6		Check, replace if required
5	Screw with washer B 4.8 x 16	2		
6	Front spoiler	1	Unclip from fender and disconnect electrical connectors	Reconnect electrical connectors and clip into fender
7	Self-tapping screw B 4.8 x 22	6		
8	Washer A 5.3	6		
9	Sheetmetal nut B 4.8	6		Check, replace if required
10	Sealing strip	1		
11	Spacer sleeve 6.1 x 1	4		
12	Cover rail	1		
13	Self-tapping screw B 4.8 x 22	4		
14	Sheetmetal nut 4.8	4		Check, replace if required
15	Air inlet grille	1	Unclip from front spoiler	Clip into front spoiler

No.	Designation	Qty.	Note: Removal	Installation
16	Flasher	2	Unclip from front spoiler	Clip into front spoiler
16A	U.S. version Flasher	2		
17	Self-tapping screw	2		
18	Foglamp	2	Unclip from front spoiler	Clip into front spoiler
19	Screw with washer	2		
20	Sheetmetal nut	2		Check, replace if required
21	Bracket	1		
22	Self-tapping screw B 4.2 x 9.5	4		
23	Washer A 4.3	4		
24	Expansion nut	4		Check, replace if required
25	Self-tapping screw with washer B 4.2 x 16	4		
26	Cap	1	Unclip from front spoiler	Clip into front spoiler
27	Piping	2		
28	Retaining clamp	40		
29	Retaining strip	2		Rivet into place with front spoiler
30	Pop rivet A 3.2 x 7.9	2	Drill out, drill dia. 3 mm	
31	Retaining strip	1		Rivet into place with front spoiler
32	Pop rivet A 3.2 x 9.7	3	Drill out, drill dia. 3 mm	

No.	Designation	Qty.	Note: Removal	Installation
33	Wire tie-wrap	4		Replace
34	Sealing wedge	1		Replace
35	Sealing wedge	1		Replace
36	Bumper support	1		
37	Fillister head screw M 12 x 110	2		
38	Washer A 13	2		
39	Impact pipe	2		
39A	U.S. version impact absorber	2		
40	Screw with washer M 8 x 30	4		
41	Support	2		Replace
42	Bracket	1	Separate rivets between bracket and bumper support (drill dia. 3 mm)	Rivet into place complete with bumper support
43	Retaining strip	1		
44	Hexagon head bolt M 6 x 16	4		
45	Washer 6.4 x 16 x 1.5	4		
46	Washer A 6.4	4		
47A	U.S. version Cap	1	Unclip from protective web	Clip into protective web
48A	U.S. version Hexagon head nut M 5	4		
49A	U.S. version Protective web	2		

No.	Designation	Qty.	Note: Removal	Installation
50A	U.S. version Support	2		
51A	U.S. version Nut M 5	2		
52A	U.S. version Spacer	2		Check, replace if required
	U.S. version Bracket	2		
54A	U.S. version Plug-in nut	4		Replace
55A	U.S. version Self-tapping screw B 4.2 x 32	2		

63 55 19 Removing and installing tail panels

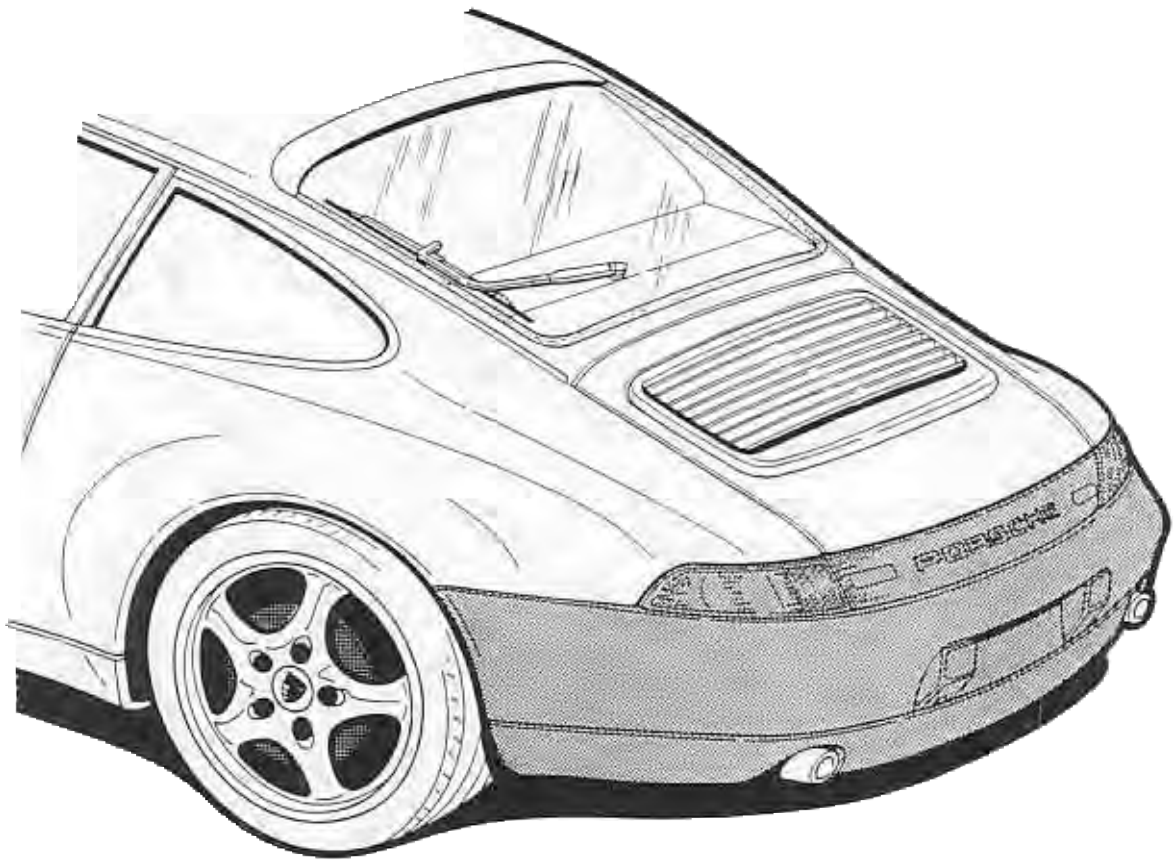

63 55 19 Removing and installing tail panels

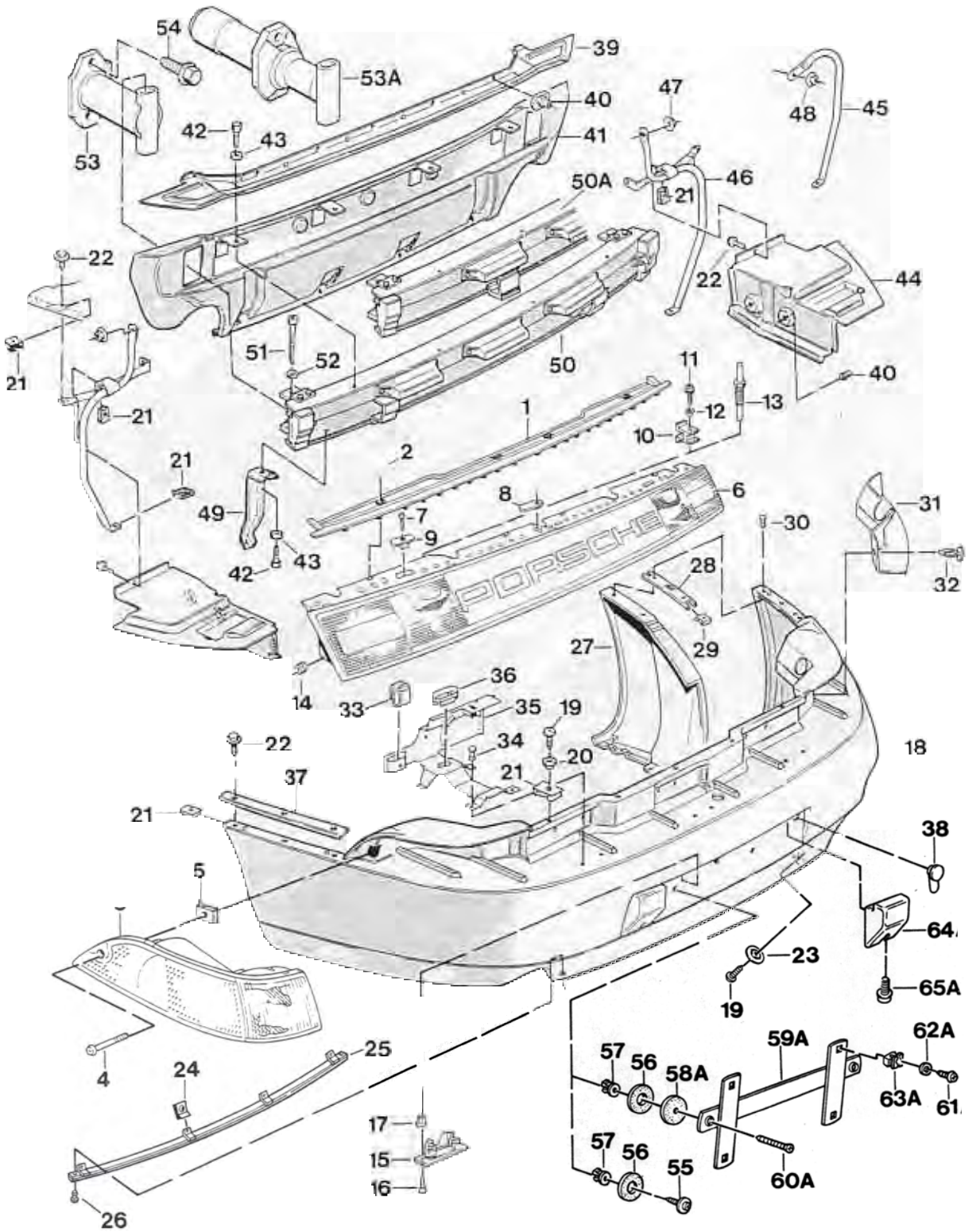

63 55 19 Removing and installing tail panels

Undo the wheel housing liners partially before removing the tail panels!

No.	Designation	Qty.	Note: Removal	Installation
1	Cover	1	Open plug nut	Close plug nut
2	Plug nut	4		Check, replace if required
3	Lamp assembly	2	Unclip from end cover and undo electrical connection	Reconnect electrical connection and clip into end cover
4	Self-tapping screw	2		
5	Sheetmetal nut	2		
6	End cover	1	Undo threaded stud (13), screw out fillister head screws (7), take end cover off tail panel and disconnect electrical connection	Reconnect electrical connection, insert end cover and adjust with item 11 at bottom and item 7 at top to line up with body contours
7	Fillister head screw	3		
8	Bracket	1		
9	Bracket	2		
10	Adjuster element	3		
11	PT screw	3		
12	Spacer	3		
13	Threaded stud	3	Screw out of adjuster element up to upper edge of end cover	Screw into adjuster element
14	Rubber grommet	6		Check, replace if required

No.	Designation	Qty.	Note: Removal	Installation
15	License plate lamp	2	Disconnect electrical connection	Reconnect electrical connection
16	Self-tapping screw	4		
17	Expansion nut	4		Replace
18	Tail panel	1		
19	Oval-head self-tapping screw B 4.8 x 16	11		
20	Spacer sleeve	11		
21	Sheetmetal nut B 4.8	11		Check, replace if required
22	Screw with washer B 4.8 x 25	6		
23	Washer 5 x 26 x 1	4		
24	Sheetmetal nut B 4.8	4		Adjust to center of hole
25	Retaining strip	1	Separate rivets between retaining strip and tail panel (drill dia. 3 mm)	Rivet to tail panel
26	Pop rivet A 3.2 x 7.9	4		
27	Heat shield, lateral	2	Separate rivets between strip, heat shield and tail panel (drill dia. 3 mm)	Rivet to tail panel, heat guard and strip
28	Strip	2		
29	Sheetmetal nut B 4.8	6		Adjust to center of hole
30	Pop rivet A 3.2 x 9.7	4		

No.	Designation	Qty.	Note: Removal	Installation
31	Heat shield for lamp frame	2	Separate rivets between heat shield and tail panel (drill dia. 3 mm)	Rivet to tail panel
32	Pop rivet A 4 x 18.8	4		
33	Wire clamp	5		
34	Rivet	12		
35	Retaining bracket	3	Separate rivets between retaining bracket and tail panel (drill dia. 3 mm)	Rivet to tail panel
36	Guide	3		Replace
37	Piping	2		Must be flush with fender and tail panel
38	Cap	1		
39	Heat shield for cap	1	Undo bolts from body	Screw to body with item 40
40	Hexagon head nut T 5	9		
41	Heat shield center	1	Undo bolt connection to bumper support	Fit to fender support with item 42 and item 43
42	Self-tapping screw B 4.8 x 16	4		
43	Washer 5 x 26 x 1	4		
44	Lateral heat shield, upper	2	Undo bolts from body	Fit to body with items 22 and 40
45	Support tube	2		

No.	Designation	Qty.	Note: Removal	Installation
46	Support tube	2	Undo bolt connection to body and to heat shield (item 44)	Screw to body with item 47 and to tail panel with item 19 and item 21
47	Hexagon head nut M 6	4		
48	Hexagon head nut M 5	4		
49	Tail support	2	Undo bolt connection to bumper support	Fit to bumper support with item 42 and item 43
50	Bumper support	1		
50A	U.S. version Bumper support	1		
51	Fillister head screw M 12 x 110	2		
52	Washer A 13	2		
53	Impact pipe	2		
53A	U.S. version Impact absorber	2		
54	Screw with washer M 8 x 30	4		
55	Self-tapping screw with washer B 4.2 x 16	2		
56	Rubber washer	2		
57	Expansion nut	2		Check, replace if required
58A	Rubber washer	2		
59A	Bracket	1		
60A	Self-tapping screw B 4.2 x 22	2		

No.	Designation	Qty.	Note: Removal	Installation
61A	Self-tapping screw	4		
62A	Washer	4		
63A	Plug-in nut	4		Check, replace if required
64A	Bumper overrider	2	Undo bolt connections to tail panel and bumper support	Screw to tail panel and bumper support with item 65A
65A	Screw with washer M 10 x 20	2		

64 12 19 Removing and installing the windshield

The following tools and materials are required for removal and installation of the windshield using two-pack adhesive:

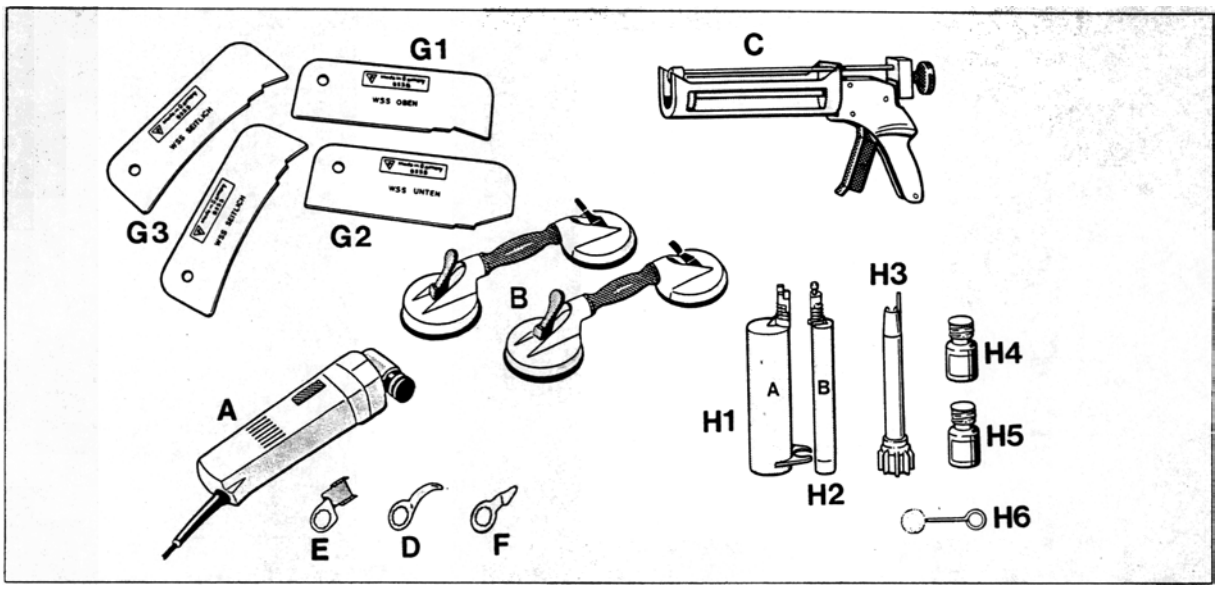

2225 - 64

A	Cutter	VAG 1561	e.g. VW Werk AG
B	Twin-cup suction puller	VAG 1344	Service equipment supply
	Bonding gun 9586	000.721.958.60	Porsche Parts Department
	Cutting knife, curved Flashing knife Cutting knife, cranked	6.39.03.164.01.9 6.39.03.113.02.2 6.39.03.122.01.1	e.g. C & E FEIN GmbH & Co. Postfach 172 70013 Stuttgart
	Assembly template 9555 – G1 Roof template – G2 Drip rail template – G3 A-post template	000.721.955.50	Porsche Parts Department
H	Adhesive set	000.043.203.42	

Contents of adhesive set:

H 1 = Cartridge component A
H 2 = Cartridge component B
H 3 = Mixing cartridge
H 4 = Primer
H 5 = Activator (Solvent Cleaner)
H 6 = Cleaning solution

Removing and installing windshield

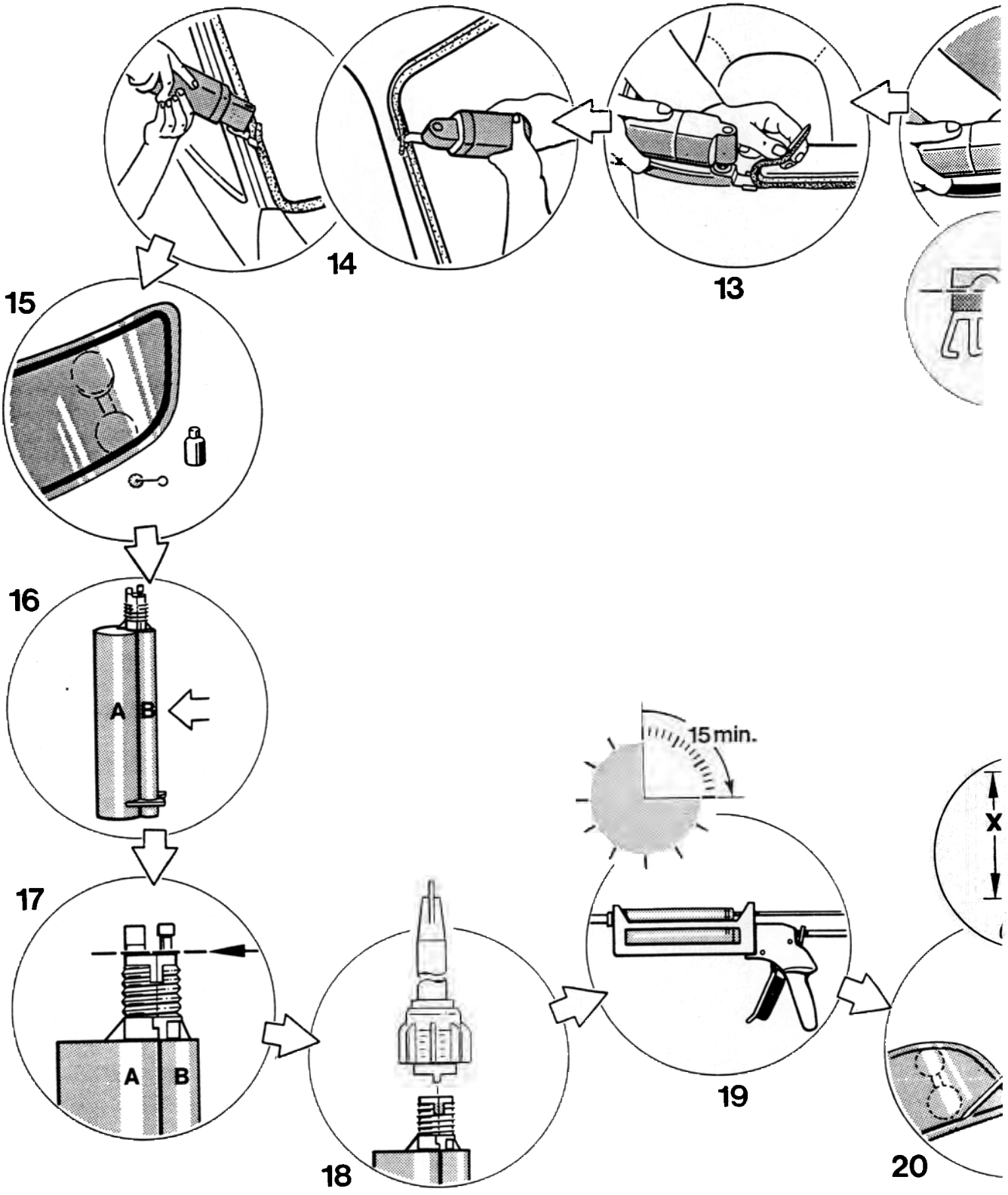

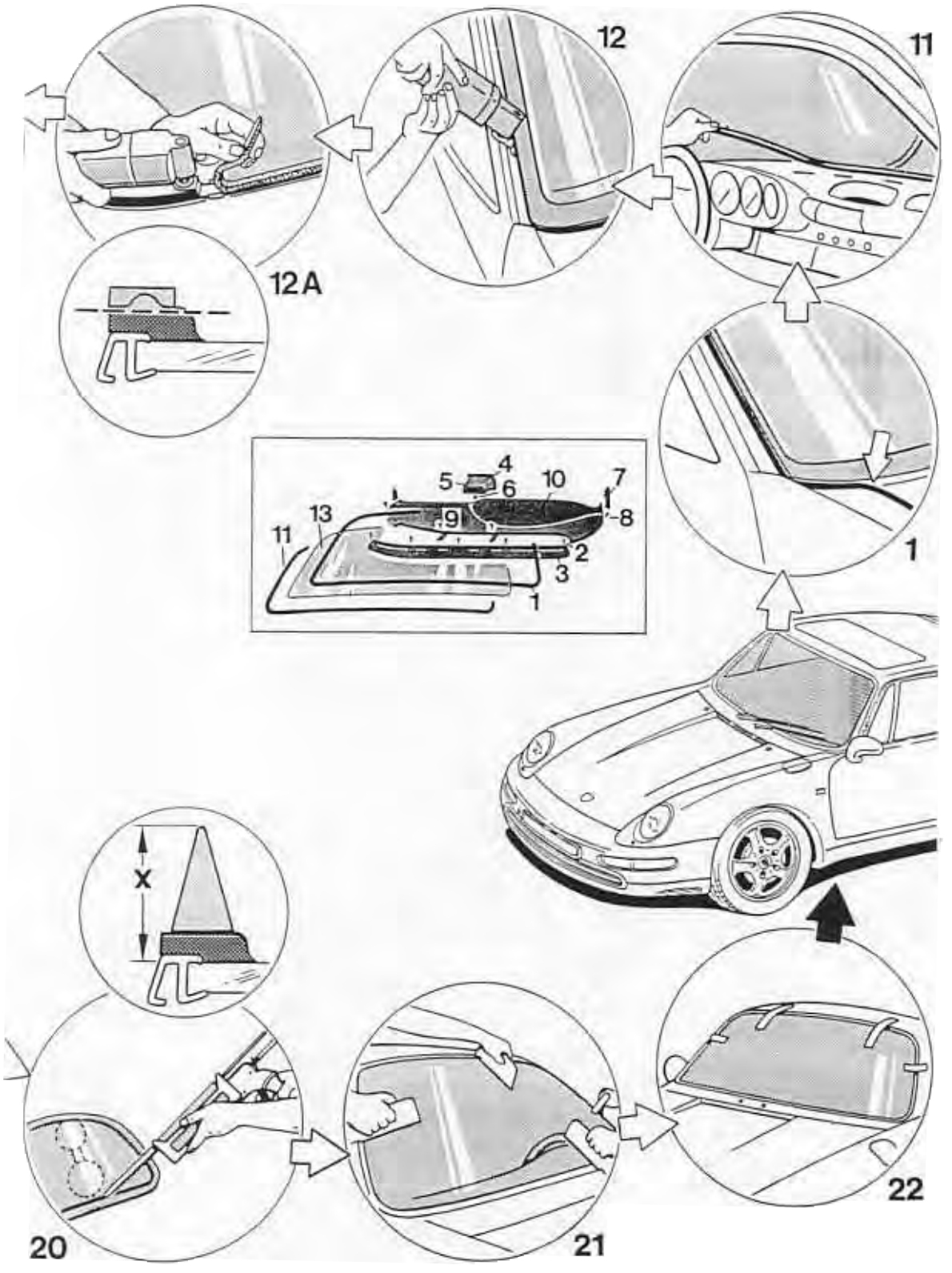

Printed in Germany - 13. 1995

64 12 19 Removing and installing windshield

Note: The removed windshield may be re-used if:
- **there are no signs of damage on the windshield,**
- **the windshield was removed without damage,**
- **the rim profile for the cover molding is undamaged**

Removing windshield

No.	Operation	Procedure
	Remove windshield wipers	Unscrew hexagon head nuts. Lift off spring washers and wipers.
1	Pull off cover molding	Detach and pull off windshield cover molding.
	Open door windows	**Caution: The door windows must not be closed until the adhesive has cured completely.**
	Remove demister molding	Screw out 5 countersunk head screws and take off demister molding.
2	– *Countersunk head self-tapping screws*	
3	– *Demister molding*	
	Remove center jet	Press two mounting lugs down and pull out center nozzle.
4	– *Mounting lugs*	
5	– *Center nozzle*	
	Remove upper part of instrument panel	Unscrew hexagon-head nut from threaded stud of center instrument panel mount on the left of the center nozzle aperture. Pull off 2 cover panels. Screw out two self-tapping screws below the cover panels. Screw 2 self-tapping screws out of upper instrument panel mount. Lift off upper instrument panel section.
6	– *Hexagon head nut*	
7	– *Cover panels*	
8	– *Self-tapping screws*	
9	– *Self-tapping screws*	
10	– *Instrument panel upper section*	

No.	Operation	Procedure
	Pull off window antenna connector	Pull connector of window antenna off the antenna amplifier.
11	Pull off cover section	Separate cover section of windshield from spotweld flange of body and pull off cover section.
12	Cut out windshield	Insert curved knife (D) into cutter (A). Set vibration regulator to stage 5. Cut through bonding between windshield and body along the entire windshield. Take out windshield.
12A	Remove adhesive from windshield	Fit scraper (E) to cutter (A) and use scraper to remove adhesive traces from precoated adhesive strip of windshield. Remove adhesive traces in such a way that adhesive strip remains as intact as possible.
13	Remove adhesive from body	Insert flashing knife (E) into cutter (A) and use cutter to remove adhesive from body only to the extent that the remaining adhesive covers the whole area in a uniform manner.
14	Remove excess adhesive	**Only if adhesive has squeezed out on the sides:** Fit cranked knife (F) to cutter (A) and carefully cut off adhesive that has squeezed out along the sides so that the remaining adhesive covers the whole area in a uniform manner. **Caution: Take care not to damage the paintwork!**
	Clean windshield aperture of body	Clean windshield aperture in body carefully with cleaning solution (H5). **Caution: Make sure no cleaning solution residue remains on the bodywork.**

	Apply primer to damaged areas of bodywork	Use primer (K4) to coat damaged paintwork areas in non-visible section of windshield aperture.
15	Activate bonding section of windshield	Apply activator (H5) to bonding section of pre-coated windshield. **Caution: Allow a flash-off time of at least 10 minutes!**
	Insert cover section	Fit cover section of windshield from inside (passenger compartment) to spotweld flange on body.
16	Clip cartridges with components A and B together	Clip the component B cartridge to the component A cartridge
17	Open assembled cartridge	Cut the closures of the two cartridges off level using a knife
18	Install mixing tube	Push mixing tube (H3) onto the groove on the assembled cartridge and screw it into place using the unit nut.
19	Place cartridge in bonding gun	Place the assembled cartridge with mixing tube in the bonding gun.

Caution: Open time is 15 minutes!

Open time is the time available for application of the adhesive and for installing the windshield into the aperture of the body.

Installing the windshield

No.	Operation	Procedure
20	Apply adhesive to the windshield	Apply a trapezoidal bead of 2-pack adhesive to the bonding section of the windshield using the bonding gun. **Dimension "x" = approx. 16 mm** When applying the adhesive, be sure to apply the adhesive in an overlapping manner
	Note:	**2 persons are required to insert and to adjust the windshield!**
	Insert windshield into bodywork	Insert windshield into window aperture of body in such a manner that the gaps between the windshield and the A-posts are parallel and that the gap between the windshield and the cowl is **4 mm**. **Caution: Do not press windshield into position yet!**
21	Adjust windshield using templates	Press the windshield into windshield aperture of body using the roof (G1), cowl (G2) and B-post (G3) templates. **Caution: Due to the consistency of the adhesive, a windshield pressed in too deeply cannot be repositioned anymore!**
22	Locate windshield	Use two spacer blocks (e.g. wooden or plastic strip) – 4 mm thick – in the body cowl area to prevent the windshield from slipping down. Locate windshield in the roof and B-post areas with a strip of adhesive tape. Note: The locating and securing aids may be removed after approx. 1 hour.

No.	Operation	Procedure
	Clean visible areas	Remove adhesive that has squeezed out immediately and clean the visible areas affected using cleaning solution (K5).
	Connect windshield antenna connector to antenna amplifier	
	Refit upper instrument panel section	Instrument panel mount: 2 upper self-tapping screws, one self-tapping screw on right and left-hand each, 1 hexagon head nut in center. Place right and left-hand cover panels into position.
	Fit demister molding	Fit demister molding with 5 countersunk-head self-tapping screws.

Caution

The bonding does not immediately reach its full strength. In order to ensure sufficient bonding strength, the following boundary conditions must be adhered to:

Curing time	3 hours
Temperature	min. 10° C
Fixing time	approx. 1 hour

Do not operate the vehicle before the curing time has elapsed!

64 12 51 Sealing the windshield

Insulating the gap between windshield and body

The following tools and materials are needed for insulating the gap between the windshield and the body.

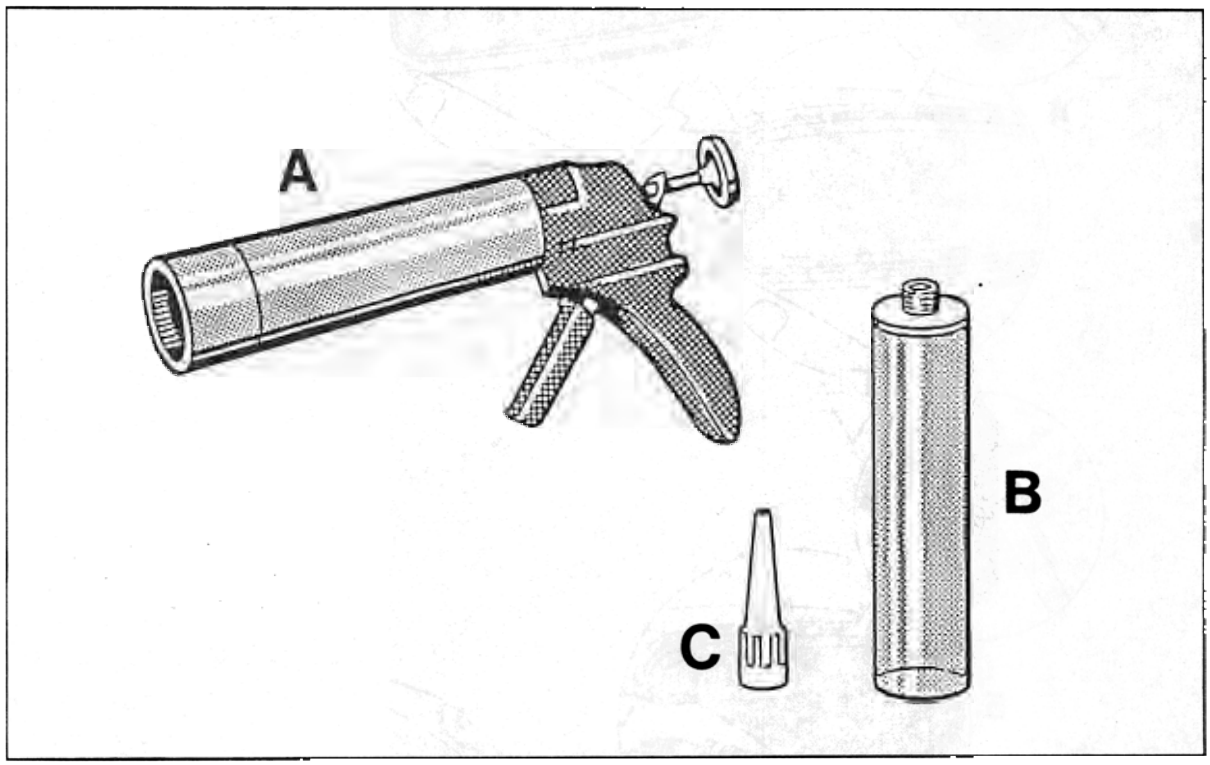

A = bonding gun

B = cartridge of insulation material

C = application nozzle

Insulating the gap between windshield and body

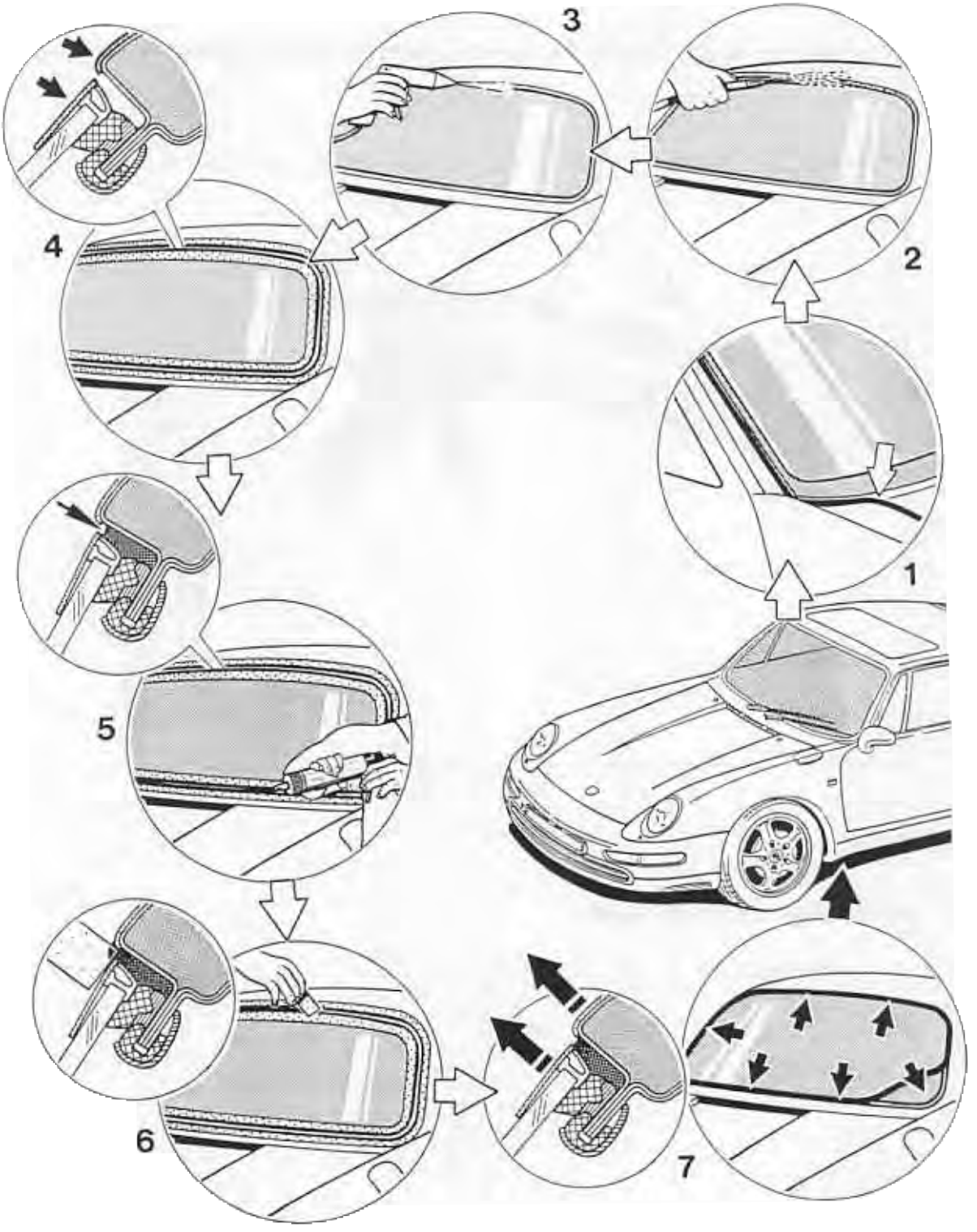

Insulating the gap between windshield and body

No.	Operation	Instructions
1	Remove cover strip.	Loosen and remove cover strip of windshield.
2	Clean gap between windshield and body.	Wash out the gap between windshield and body with water all round the windshield.
3	Dry gap between windshield and body.	Dry the gap between windshield and body using compressed air all around the windshield.
4	Mask off windshield and body.	Apply masking tape around the windshield, making sure that the mounting section for the cover strip is covered. Apply masking tape all round the body opening for the windshield up to the edge of the gap.
5	Apply insulating material.	Screw application nozzle (C) onto insulating material cartridge (B). Insert cartridge with nozzle into bonding gun (A). Fill the gap between the windshield (mounting section) and the body **completely** with insulating material.
6	Remove excess insulating material.	Strip excess insulating material above the gap between windshield and body off smoothly using a piece of cardboard.
7	Remove masking tape and instal cover strip.	Remove masking tape from windshield and body. Press windshield cover strip into mounting section.

64 75 19 Removing and installing side window

The following tools and materials are required for the removal and installation of the side window:

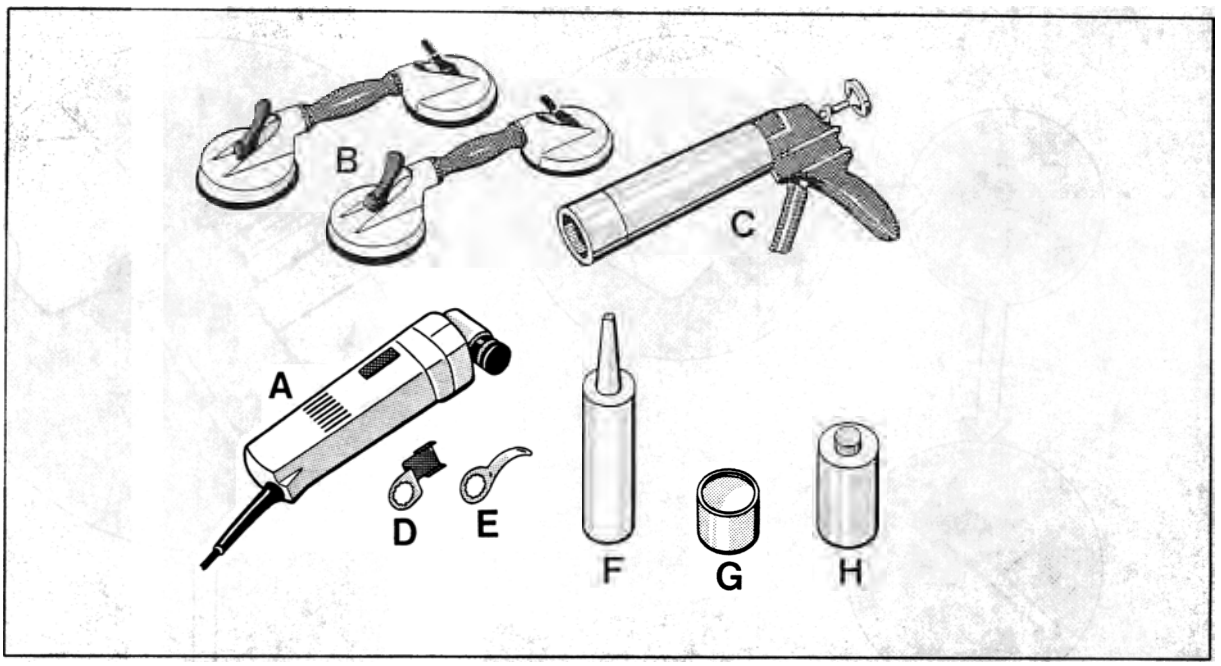

1435 - 64

A	Cutter	VAG 1561	z.B. VW Werk AG
B	Twin-cup suction puller	VAG 1344	KD-Gerätevertrieb
C	Bonding gun	VAG 1628	
D	Flashing knife	6.39.03.113.02.2	e.g. C & E FEIN GmbH & Co. Postfach 172
E	Cutting knife curved	6.39.03.103.01.7	D-70013 Stuttgart 1
F	Adhesive sealant	999.915.400.40	Porsche-Teiledienst
G	Body primer	999.915.487.40	
H	Cleaning solution	999.915.487.40	

Removing and installing side window

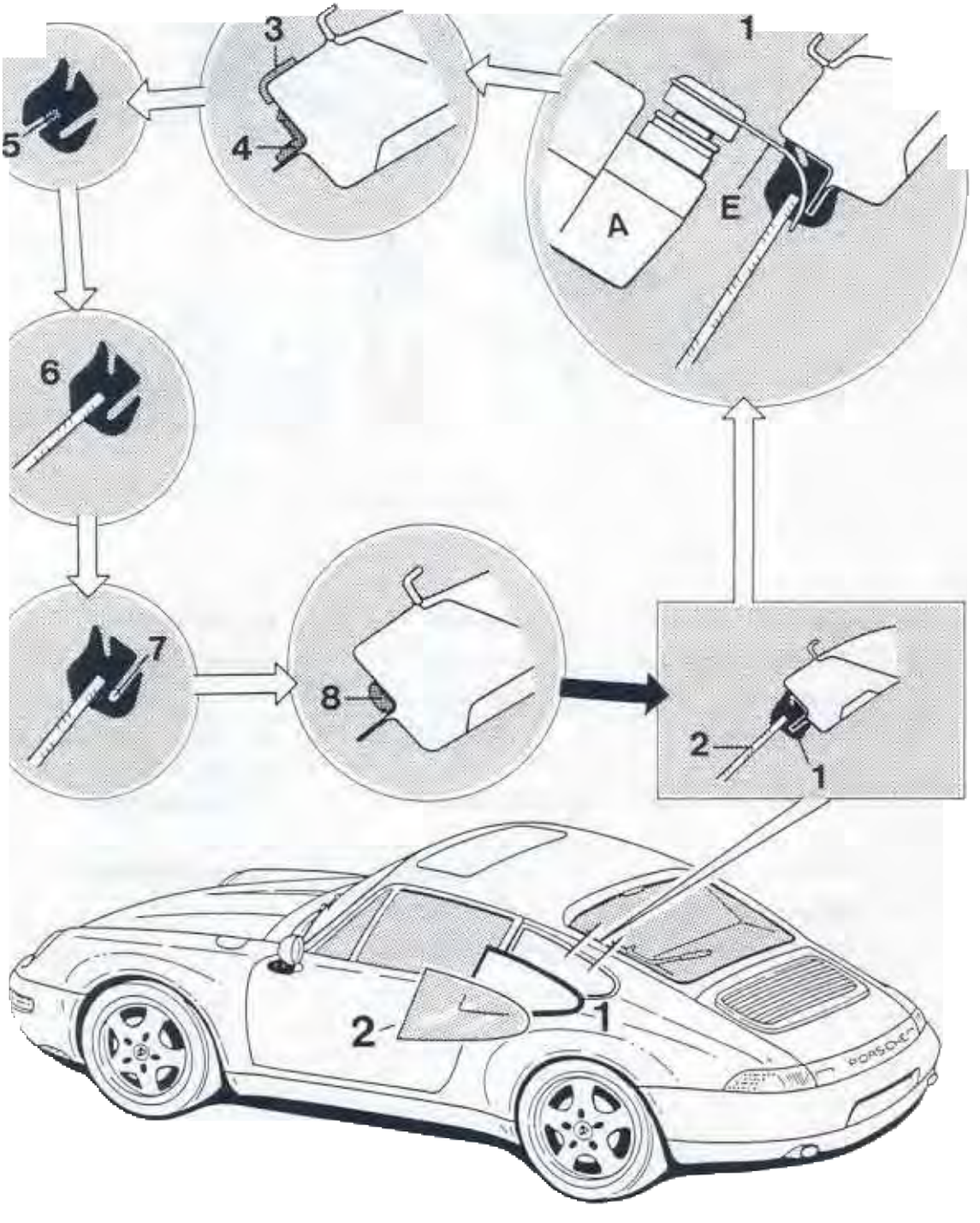

64 75 19 Removing and installing side window

No.	Operation	Procedure
1	Cut through rubber seal	Fit curved cutting knife (D) to cutter (A). Push cutting knife into sealing rubber, set vibration regulator to stage 6 and cut through rubber seal along its full circumference between side window and and body.
	Lift out side window	
	Pull sealing rubber residues off the body panel	
2	Attach adhesive tape to bodywork	Mask off body in visible area of window aperture to protect the paintwork.
3	Remove adhesive sealant from bodywork	Fit flashing knife (E) to cutter (A) and cut adhesive sealant from the bodywork only to the extent that the remaining adhesive covers the entire area.
	Clean window aperture of bodywork	Thoroughly clean window aperture of body with cleaning solution (H). **Caution: Make sure no cleaning solution residue remains on the body.**
	Apply primer to damaged areas of bodywork	Apply body primer (G) to damaged topcoat in non-visible areas of window aperture.
	Remove adhesive sealant from side window	Remove adhesive sealant carefully from side window using a fixed knife. Adhesive residues covering the area in a uniform manner may remain on the window.

No.	Operation	Procedure
	Clean side window	Thoroughly wipe off side window with some cleaning solution (H). **Caution: Make sure no cleaning solution residue remains on the side window.**
	Clean rubber seal	Clean window channel of rubber seal with some cleaning solution (H) **Caution: Make sure no cleaning solution residue remains in the window channel of the rubber seal.**
4	Apply adhesive sealant to channel of rubber seal	Place cartridge containing adhesive sealant (F) into bonding gun (C) and bond window channel of rubber seal along its entire circumference. **Caution: The side window must be refitted to the vehicle no later than 4 hours after applying the adhesive.**
5	Place rubber seal to side window	
6	Place assembly cord into rubber seal	
7	Apply adhesive sealant to body	Using the bonding gun (C), apply adhesive sealant (F) in a continuous bead to the circumference of the window aperture in the body
	Place side window into body	Place prepared side window into body aperture, align and press into place. Working from the passenger compartment, pull rubber seal over the spotweld flange of the body by pulling out the assembly cord.
	Clean visible areas	Adhesive sealant that has squeezed out must be removed immediately and the visible areas affected must be cleaned with cleaning solution (H).

64 86 19 Removing and installing rear window

The following tools and materials are required for removal and installation of the rear window using 2-pack adhesive:

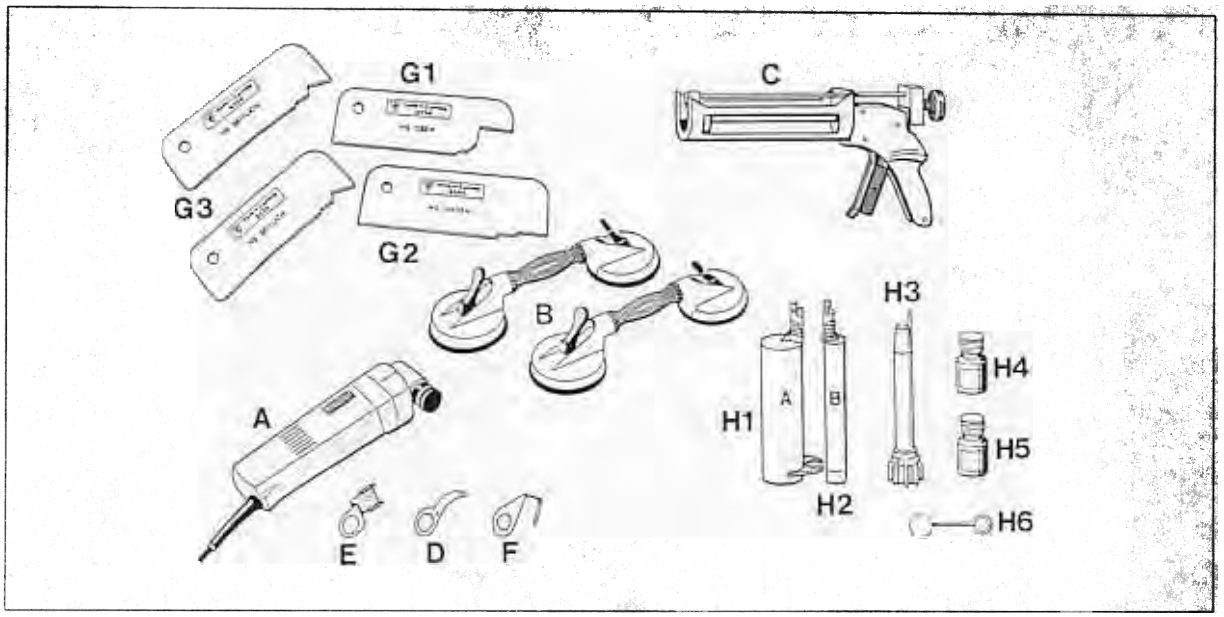

A	Cutter	VAG 1561	e.g. VW Werk AG
B	Twin-cup suction puller	VAG 1344	Service equipment supply
C	Bonding gun 9586	000.721.958.60	Porsche Parts Department
D	Cutting knife, curved	6.39.03.164.01.9	e.g. C & E FEIN GmbH & Co.
E	Flashing knife	6.39.03.113.02.2	Postfach 172
F	Cutting knife, U-shape	6.39.03.118.01.3	70013 Stuttgart 1
G	Installation template 9555 – G1 Roof template – G2 Center section templ. – G3 C-post template	000.721.955.60	Porsche Parts Department
H	Adhesive set	000.043.203.42	

Contents of adhesive set:

H 1 = Cartridge component A
H 2 = Cartridge component B
H 3 = Mixing cartridge
H 4 = Primer
H 5 = Activator (Solvent Cleaner)
H 6 = Cleaning solution

Removing and installing rear window

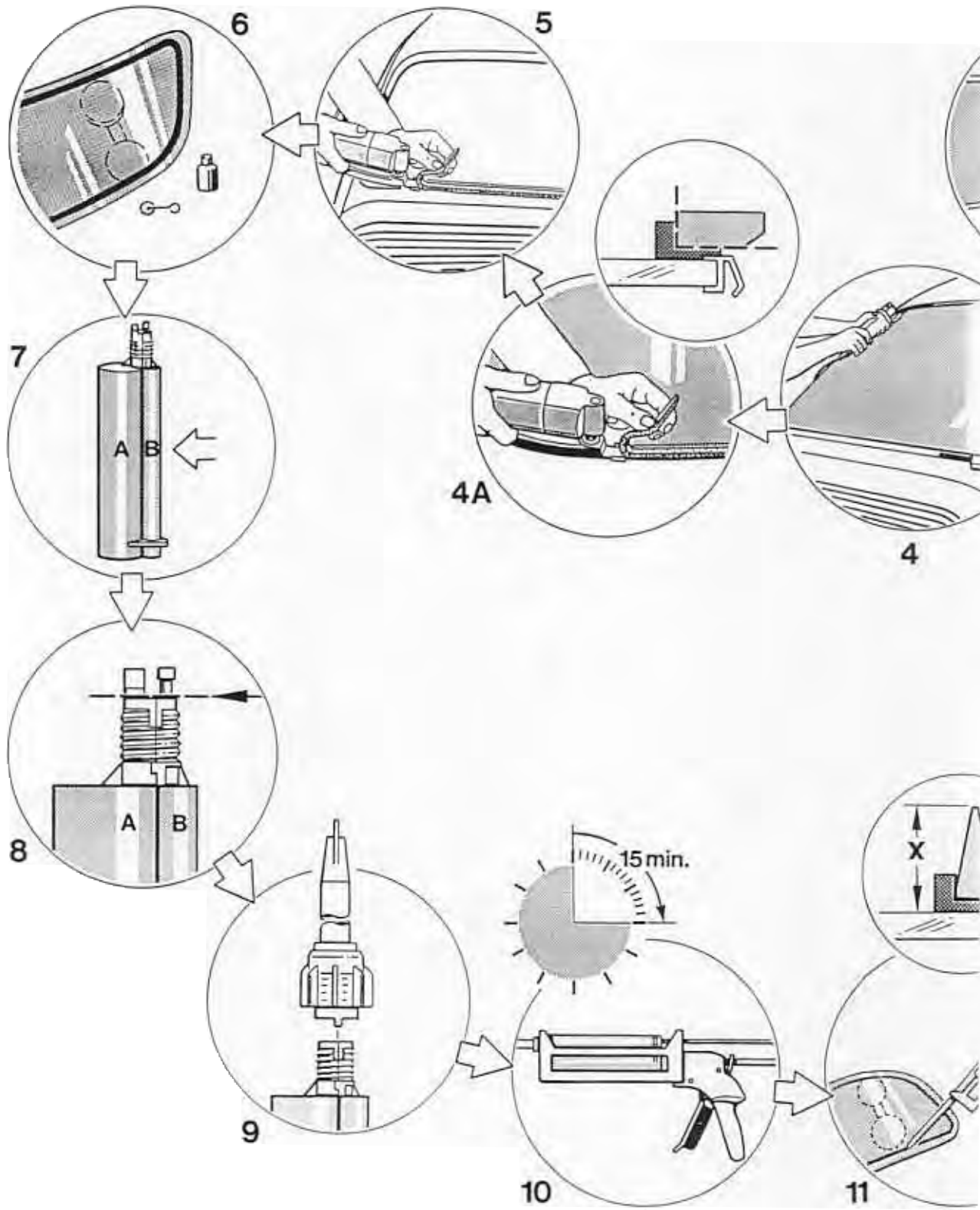

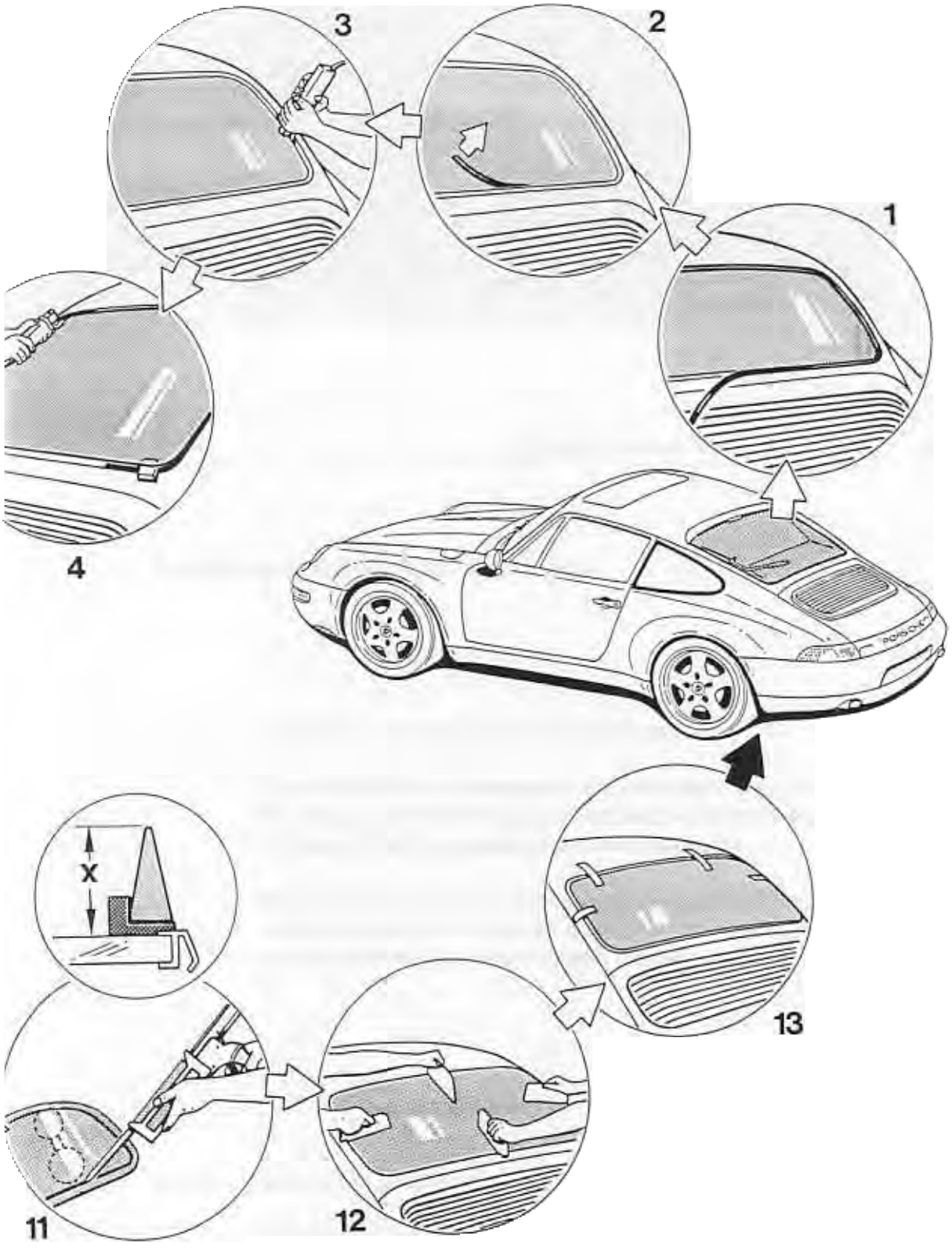
3
2
1
4
X
13
11
12

Removing and installing rear window

Note: The removed rear window may be re-used if:
- **there are no signs of damage on the rear window,**
- **the rear window was removed without damage,**
- **the rim profile for the cover molding is undamaged.**

Removing rear window

No.	Operation	Procedure
	Remove rear window wiper	Flip up cover cap, unscrew hexagon head screw, lift off spring washer and upper wiper arm. Pull off cover grommet, unscrew hexagon head nut, lift off spring washer and lower wiper arm.
1	Pull off cover molding	Detach and pull off rear window cover molding.
	Attach adhesive tape to body	Mask off upper roof section of rear window aperture with masking tape to protect the paintwork.
	Open door windows	**Caution: The door windows must not be closed until the adhesive has cured completely.**
	Remove rear wall trim	Fold rear seat backs forward. Unscrew 4 self-tapping screws from rear wall trim and push rear wall trim upwards out of its support.
	Pull off rear window heater connector	Pull connector of rear window heater off the rear window.

No.	Operation	Procedure
2	Pull off cover section	Pull cover section of rear window off the body spotweld flange.
3	Cut rear window out of center section and C-post areas	Fit curved knife (D) to cutter (A). Set vibration regulator to stage 5. Cut through bonding between body and rear window in the center section and C-post areas.
	Lift up rear window in center section	Lift up rear window in center section / C-post areas by approx. 3 cm and support window, e.g. with wooden blocks.
4	Cut out rear window in roof area	Fit U-shaped knife (F) to cutter (A). Set vibration counter to stage 6. Cut through bond between body and rear window in roof section. Lift out rear window.
4A	Remove adhesive from rear window	Fit scraper (E) to cutter (A) and use scraper to remove adhesive traces from precoated adhesive strip of rear window. Remove adhesive traces in such a way that adhesive strip remains as intact as possible.
5	Remove adhesive from body	Fit flashing knife (E) to cutter (A) und remove adhesive only to the extent that the remaining adhesive covers the whole area in a uniform manner.
	Clean window aperture of body	Clean window aperture of body thoroughly using cleaning solution (H5) . **Caution: Make sure no cleaning solution residue remains on the body.**
	Apply primer to damaged areas of bodywork	Apply primer (H4) to to damaged of paintwork areas in non-visible section of window aperture.

No.	Operation	Procedure
6	Activate bonding section of rear window	Apply activator to bonding section of pre-coated rear window (H5). **Caution: Allow a flash-off time of at least 10 minutes!**
	Place cover section into position	Attach cover section of rear window from inside (passenger compartment) to the body spotweld flange.
7	Clip cartridges with components A and B together	Clip the component B cartridge to the component A cartridge
8	Open assembled cartridge	Cut the closures of the two cartridges off level using a knife
9	Install mixing tube	Push mixing tube (H3) onto the groove on the assembled cartridge and screw it into place using the unit nut.
10	Place cartridge in bonding gun	Place the assembled cartridge with mixing tube in the bonding gun.

Caution: Open time is 15 minutes!

Open time is the time available for application of the adhesive and for installing the windshield into the aperture of the body.

Installing the rear window

No.	Operation	Procedure
	Apply adhesive to the rear window	Apply a trapezoidal bead of 2-pack adhesive to the rear window using the bonding gun. **Dimension "X" = approx. 18 mm** When applying the adhesive, make sure it is applied in an overlapping manner.
	Note:	**2 persons are required to insert and adjust the rear window!**
	Insert rear window into body	Install rear window into window aperture of body in such a manner that the gap between the rear window and the C-post is parallel and that a gap of **6 mm** remains between the rear window and the body center section. **Caution: Do not press rear window into place yet!**
22	**Adjust rear window with templates**	Press rear window into body window aperture according to contours of roof (G1), center section (G2) and C-post (G3) templates. **Caution: Due to the consistency of the adhesive, the position of the rear window cannot be corrected if it has been pressed in too deeply!**
23	Locate rear window	Use 2 spacer blocks (e.g. wooden or plastic strips) – 6 mm thick – in the center body area to prevent the rear window from shifting down. Apply adhesive tape to locate rear window in roof and C-post areas. Note: The locating and protecting aids may be removed after approx. 1 hour.

No.	Operation	Procedure
	Clean visible areas	Remove adhesive that has squeezed out immediately and clean the visible areas affected using cleaning solution (K5).
	Refit connector of rear window heater	Refit connector for rear window heater and route wire according to windshield contours.
	Fit rear wall trim	Push rear wall trim into support from above and screw into place with 4 self-tapping screws. The self-tapping screws must be fitted with washers to protect the cloth.

Caution

The bonding does not immediately reach its full strength. In order to ensure sufficient bonding strength, the following boundary conditions must be met:

Curing time	3 hours
Temperature	min. 10° C
Fixing time	approx. 1 hour

Do not operate the vehicle before the curing time has elapsed!

64 86 51 Sealing the rear window

Insulating the gap between rear window and body

The following tools and materials are needed for insulating the gap between the rear window and the body.

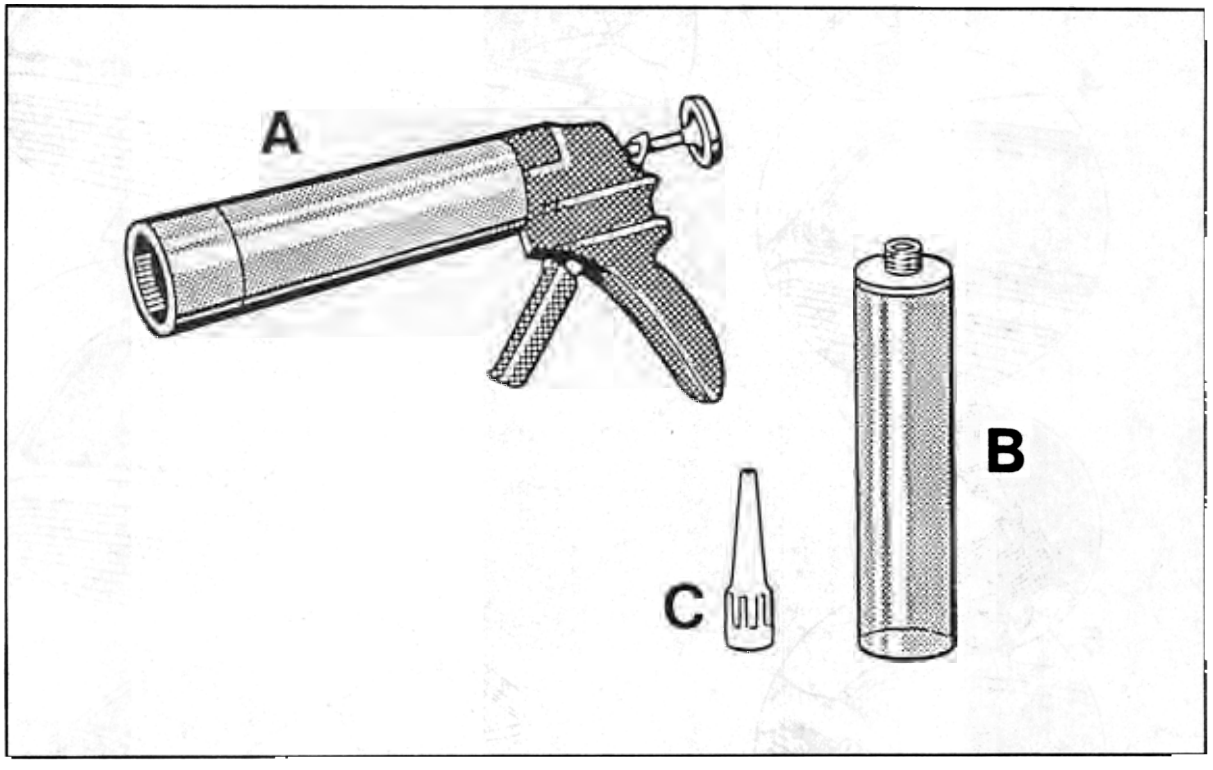

A = bonding gun

B = cartridge of insulation material

C = application nozzle

Insulating the gap between rear window and body

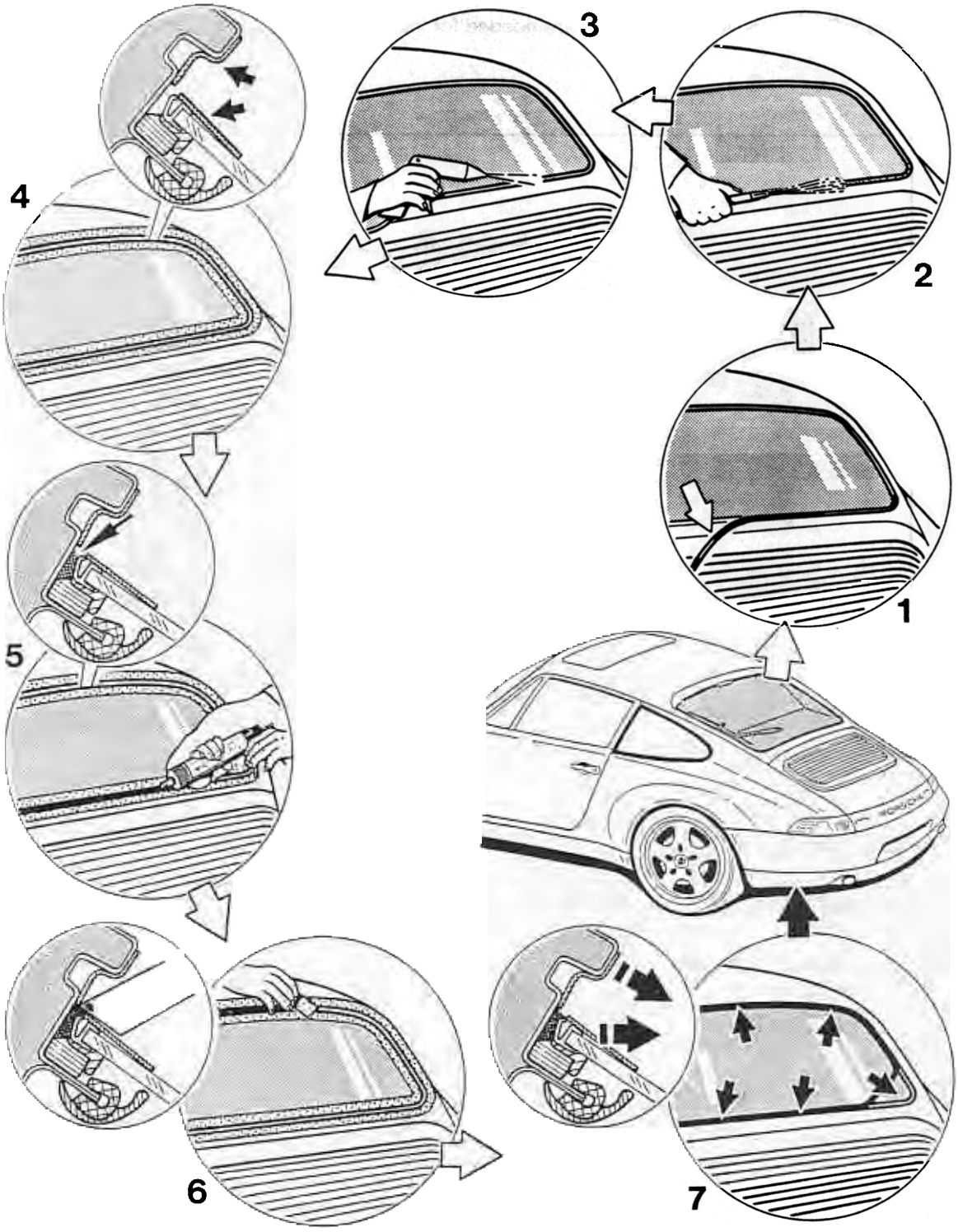

Insulating the gap between rear window and body

No.	Operation	Instructions
	Remove cover strip.	Loosen and remove cover strip of rear window.
2	Clean gap between rear window and body.	Wash out the gap between rear window and body with water all round the rear window.
3	Dry gap between rear window and body.	Dry the gap between rear window and body using compressed air all around the rear window.
4	Mask off rear window and body.	Apply masking tape around the rear window, making sure that the mounting section for the cover strip is covered. Apply masking tape all round the body opening for the rear window up to the edge of the gap.
5	Apply insulating material.	Screw application nozzle (C) onto insulating material cartridge (B). Insert cartridge with nozzle into bonding gun (A). Fill the gap between the rear window (mounting section) and the body **completely** with insulating material.
6	Remove excess insulating material.	Strip excess insulating material above the gap between rear window and body off smoothly using a piece of cardboard.
7	Remove masking tape and instal cover strip.	Remove masking tape from rear window and body. Press rear window cover strip into mounting section.

64 85 19 Removing and installing flexible rear window of Cabriolet

The following special tools are required for the installation and removal of the flexible rear window of the Cabriolet.

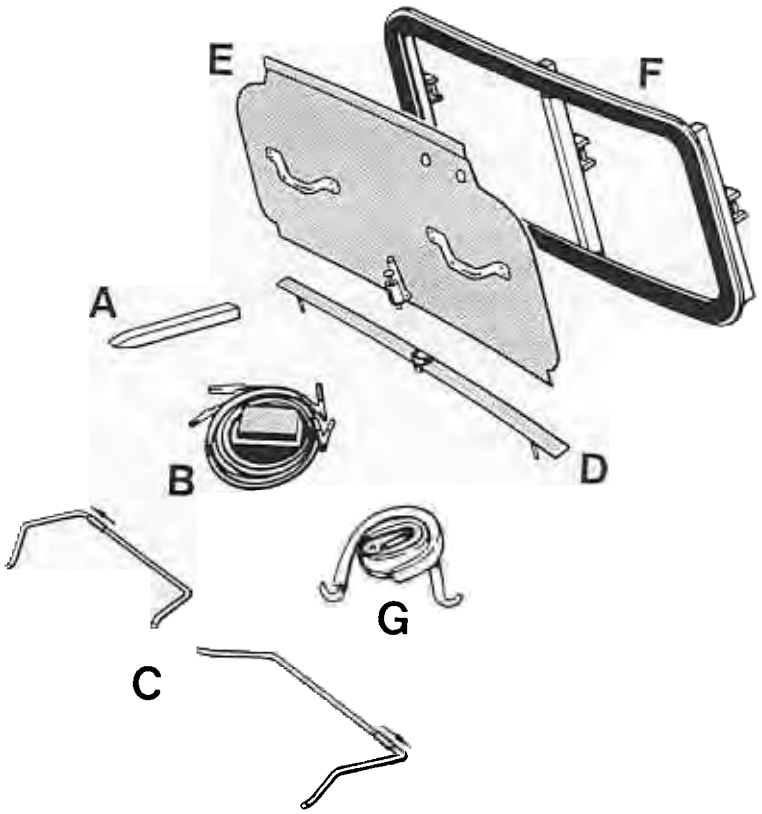

2097-64

Special tool kit, comprising:

A = Spacer wedge for convertible top opening
B = Cable with timer switch
C = Bracket for belt
D = Support rail for inside plate
E = Inside plate
F = Pressure frame
G = Belt with tensioner

Obtainable from:
Fa. Mehler Vario System GmbH,
Bahnhofstraße 26
36103 Flieden
Phone: ++496655/972-26
Fax: ++496655/5601

Removing and installing flexible rear window of Cabriolet

Removing flexible rear window of Cabriolet

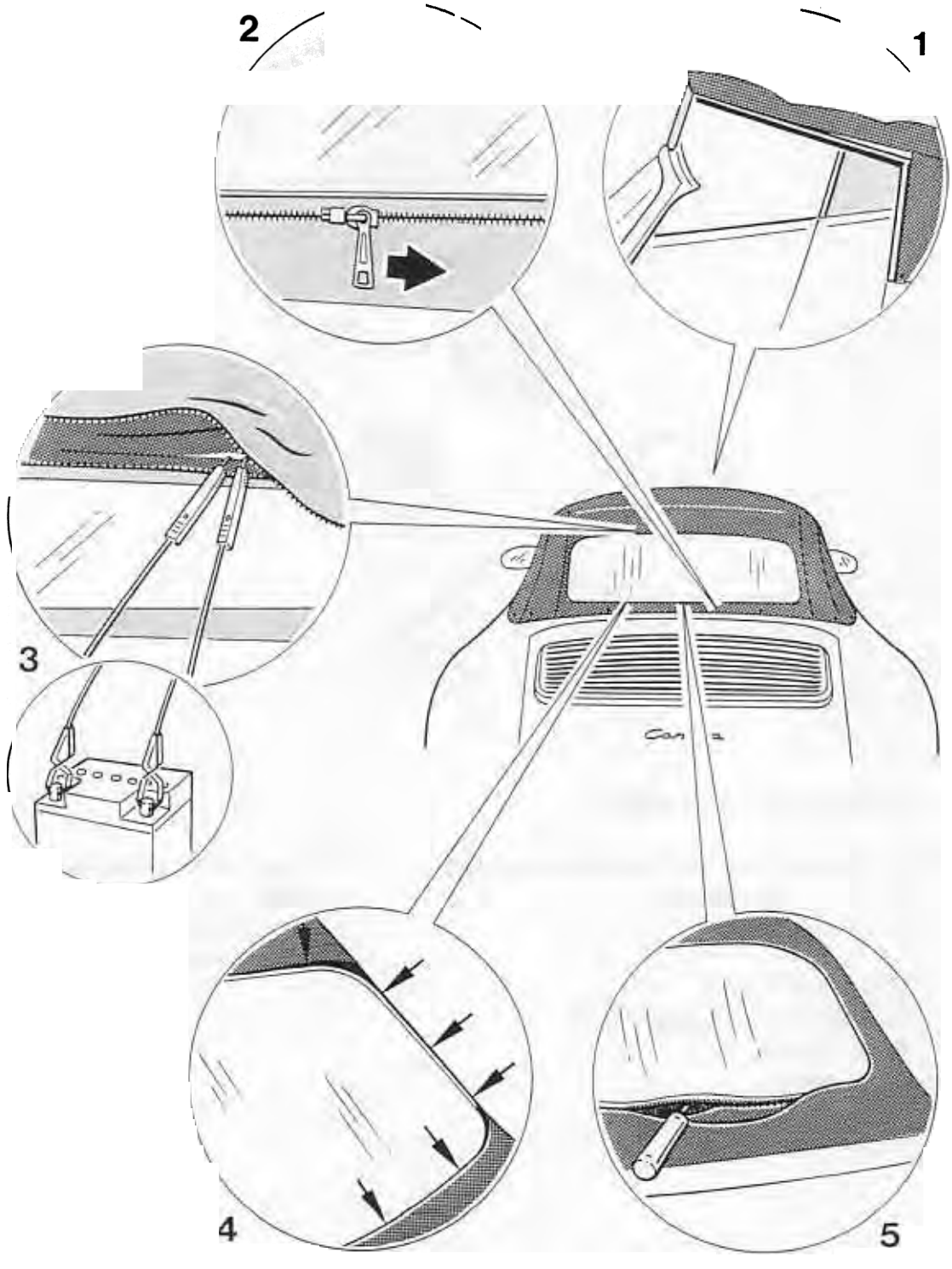

64 85 19 Removing and installing flexible rear window of Cabriolet

Removing flexible rear window of Cabriolet

No.	Operation	Instructions
1	Release tension on convertible top	Open top slightly and insert spacer wedge, spacing approx. 300 mm.
2	Open roof liner	Undo zipper around roof liner.
3	Connect power cable and heat adhesive	Bend out the contact ends of the flexible copper wires. **Warning: the wires must not be crossed!** Connect power cable to copper wires and battery. Heat adhesive for about 2 minutes. **Note: Use timer switch!** Disconnect power cable.
4	Loosen rear window	Work top covering away from rear window on all sides using a suitable tool.
5	Remove rear window	Open zip fastener in lower central part of window using a suitable tool and press rear window out of zip fastener on all sides. Remove excess adhesive traces from fabric. Traces of adhesive on the covering need not be removed if they are evenly spread.

64 85 19 Removing and installing flexible rear window of Cabriolet

Installing flexible rear window of Cabriolet.

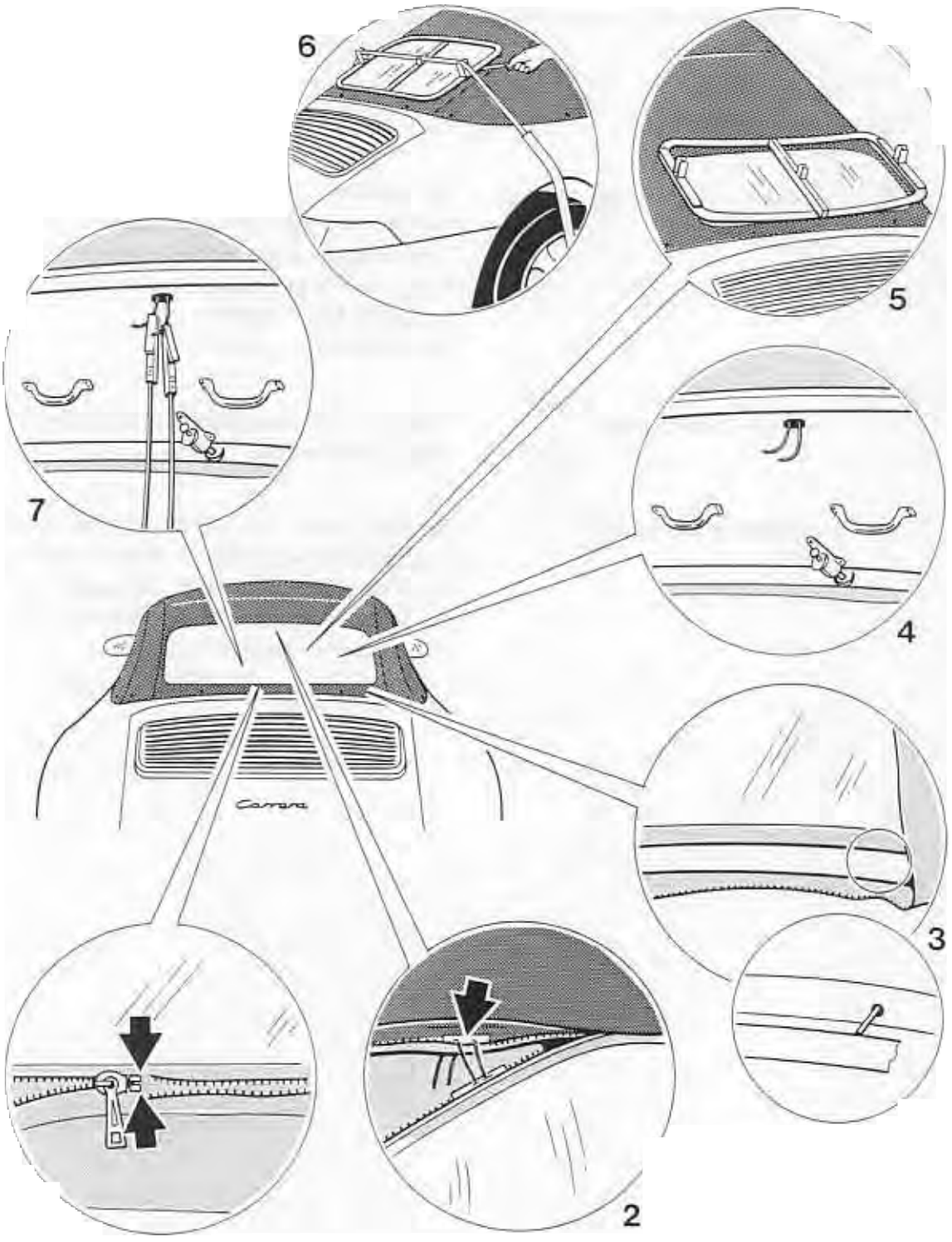

Removing and installing flexible rear window of Cabriolet

Installing flexible rear window of Cabriolet.

No.	Operation	Instructions
1	Insert rear window	Insert a slide in the end of the zip fastener on the window. Position rear window in covering. Position the ends of the two halves of the zip fastener precisely over each other and close the zip fastener up to the wire connections.
2	Push wire connections through	Push wire connections between the zip fastener strip and the fabric covering through the separate compartments in the teflon insert to the inside. **Warning: Do not cross the wire connections. There is a risk of short circuits.** Close the zip fastener and remove the slide.
3	Insert support rail	Position the support rail for the inside plate with its pins in the holes in the tack strip.
4	Insert inside plate	Push the inside plate in between the roof liner and the covering. Place the bottom edge of the inside plate on the support rail, centring it. Press the inside plate against the covering at the top and push it forwards behind the bow. Secure the inside plate against slipping using the stopper. Take the ends of the wires through the opening in the inside plate and pull them out gently.
5	Position outside pressure frame	Place the pressure frame on the outside of the covering, centring it on the rear window cutout.

No.	Operation	Instructions
6	Fasten outside pressure frame	Install the belt across the pressure frame. Connect the hooks on the end of the belt to the left and right wheel rims ahead of the axle. Push the protective sleeve over the belt to protect the bodywork. Tighten the belt using the tensioner. The outside pressure frame must be positioned evenly on the fabric covering and press the covering evenly onto the rear window. Check the pressure all around the rear window using a 0.5 mm feeler gauge. **Warning:** **If the pressure frame does not make contact all around the window, the window may melt and tear when the copper wire is heated.**
7	Connect power cable	Connect the power cable to the flexible copper wires. **Warning:** **Do not cross the ends of the copper wires. Otherwise, there may be a short circuit, causing burn marks on the covering.** Set timer switch to **2 minutes**. When this time has elapsed, disconnect the power cable and allow the adhesive to cool for 20 minutes. The special tools must stay in position while the adhesive cools. Loosen the belt and remove the special tools. Cut the ends of the copper wires back to a length of about 20 mm and push them in between the zip fastener strip and the fabric of the covering. Check that the joint between the rear window and the covering is tight. Otherwise, repeat steps 3 to 7. Close zip fastener of roof lining all round, remove spacer wedge and close top. **Note:** If the tension on the outside pressure frame becomes slacker, bend it by hand as required.

66 58 19 Removing and installing rear spoiler

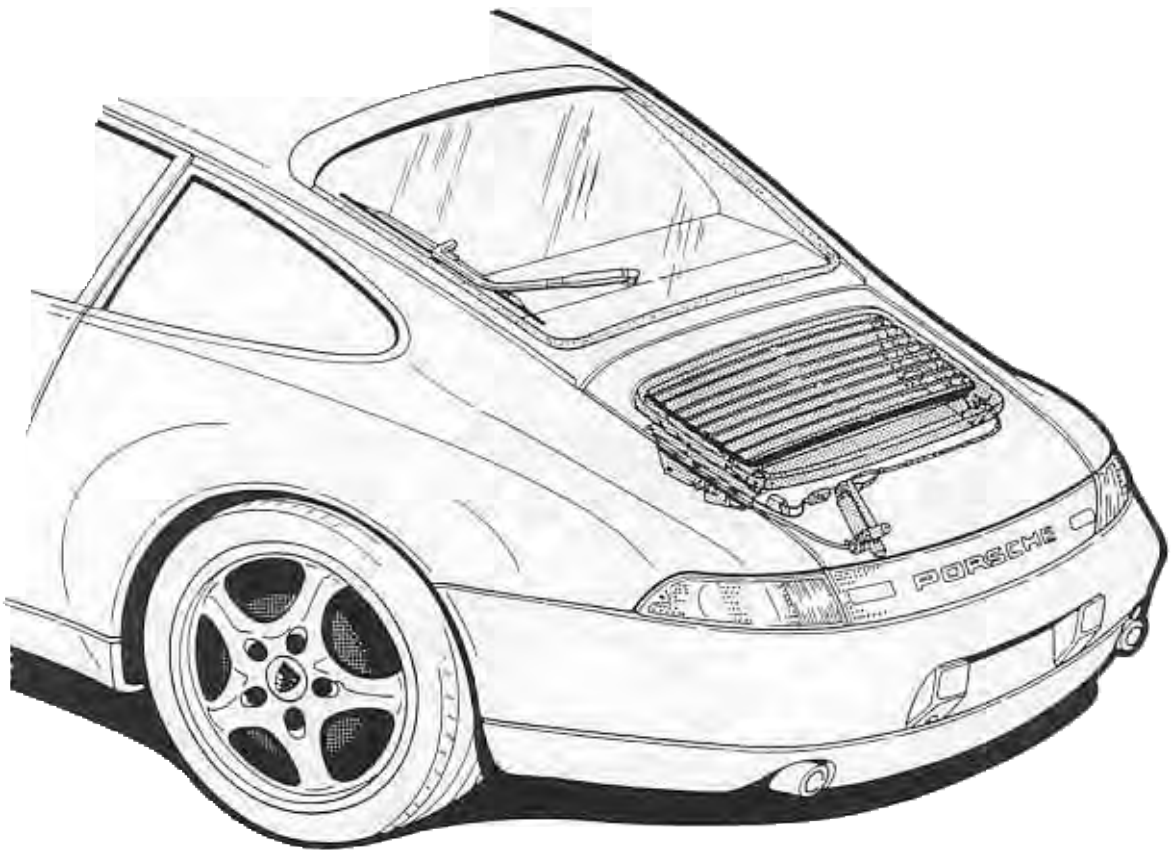

emoving and nstalli ıg rea spoile

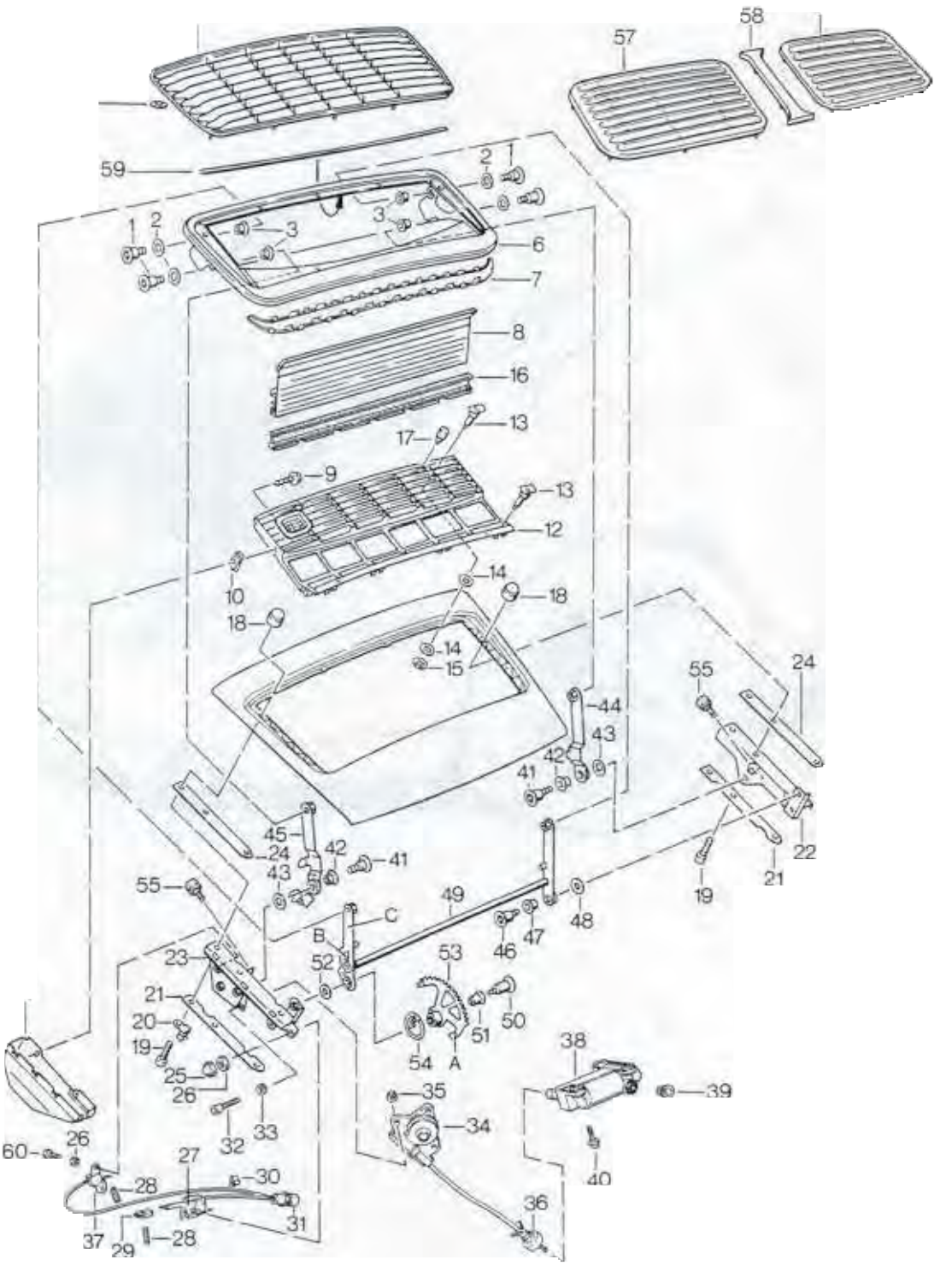

Removing and installing rear spoiler

No.	Designation	Qty.	Note: Removal	Installation
1	Shaft bolt, microencapsulated M 6 x 23	4		Replace
2	Washer 16 x 10.5 x 1 POM	4		
3	Bearing sleeve 16 x 10.1 x 11.6 POM	4	Press out inward	
4	Grille	1		
5	Clamping washer 5.0	10		
6	Outer part	1		
7	Cover	1		
8	Rear wall	1		Fit between rear spoiler and air inlet grille
9	Combination screw B 4.2 x 9.5	2		
10	Sheetmetal nut B 4.2	2		
11	Cover	1		
12	Air inlet grille	1		Align air inlet grille with contours of the rear cover when fitting
13	Hammer screw 5 x 17.7	8		
14	Washer 9 x 15 x 2	16		
15	Clamping washer 5.0	8	Pull off	Push on
16	Rubber seal	1	Pull off	Push on
17	Rubber stop	4		
18	Protective cap	6		
19	Pan-head screw M6 x 16	6		
20	Wire retainer	1		
21	Liner	2		

No.	Designation	Qty.	Note: Removal	Installation
22	Right-hand mounting plate	1		
23	Left-hand mounting plate	1		
24	Liners	8		The distance between the rear spoiler and rear cover can be adjusted by fitting liners (up to 4 per side) between the mounting plates and the rear cover
25	Hexagon nut M 5	1		
26	Washer A 5.3	1		
27	Micro switch	1		Refer to adjustment instructions for rear spoiler
28	Set screw	2		
29	Plug-in nut	1		
30	Wire clamp	3		
31	Plug	1		Make plug connection with wiring harness
32	Pan-head screw M 6 x 12	3		
33	Washer A 6.4	3		
34	Gearbox	1		The teeth of the gearbox (34) must mesh with the toothed sector (47)
35	Hexagon nut M 6	3		

No.	Designation	Qty.	Note: Removal	Installation
36	Drive shaft	1		Insert drive shaft (36) with bushing for gear motor (39) into the gear motor (38)
37	Micro switch	1		See adjustment instructions for rear spoiler
38	Gear motor	1		
39	Bushing	1		
40	Combination screw M6 x 18	3		
41	Shaft bolt M6 x 19, microencapsulated	2		Replace
42	Bearing sleeve 17 x 7 x 10.1	2		
43	Washer 16 x 3.6 x 10.5 POM	2		
44	Right-hand lever	1		
45	Left-hand lever	1		
46	Shaft bolt, microencapsulated, M 6 x 17	1		Replace
47	Bearing sleeve 17 x 7 x 10.5 POM	1		
48	Washer 16 x 1.6 x 10.5 POM	1		
49	Linkage	1		
50	Shaft bolt M6 x 27, microencapsulated	1		Replace
51	Bearing sleeve 16 x 18.5 x 10.1 POM	1		
52	Washer 24 x 12.5 x 1.6 POM	1		

No.	Designation	Qty.	Note: Removal	Installation
53	Toothed sector	1		Fit tab (A) of the toothed sector (53) into the opening (B) of the guide lever (C) on the linkage (49)
54	Torsion spring	1		
55	Rubber stop	2		
56	Right-hand grille, only ***Carrera S***	1		
57	Left-hand grille, only ***Carrera S***	1		
58	Centre grille, only ***Carrera S***	1		
59	Rail, only ***Carrera S***	1		
60	Hexagon-head bolt M5	1		
A	Tab on toothed sector	1		
B	Opening in guide lever	1		
C	Guide lever on linkage	1		

Adjusting the rear spoiler

The raising and retracting travel of the rear spoiler may be limited and, hence, adjusted by setting the switching points of two microswitches.

Adjusting the microswitch for retracting the spoiler

Operate the service switch to retract the spoiler until the tab (A) of the toothed sector (53) is released in the opening (B) of the guide lever (C). Unscrew hex nut (25). Use the threaded pin (28) to adjust the switching point of the micro switch (27). Tighten hexagon head nut (25) again. Actuate the service switch to check the adjustment.

Adjusting the microswitch for raising the spoiler

Operate the service switch to raise the spoiler until the lever (45) touches the buffer (55). Use the threaded pin (28) to adjust the micro switch (37). Actuate the service switch to check the adjustment.

66 58 55 Replacing rear spoiler

The rear spoiler (outer rear spoiler section) must be painted prior to fitting!

When replacing the rear spoiler, paint the rear spoiler outer section in body color and bond it to the spoiler grille.

The following materials and tools are required for bonding the rear spoiler outer section to the spoiler grille:

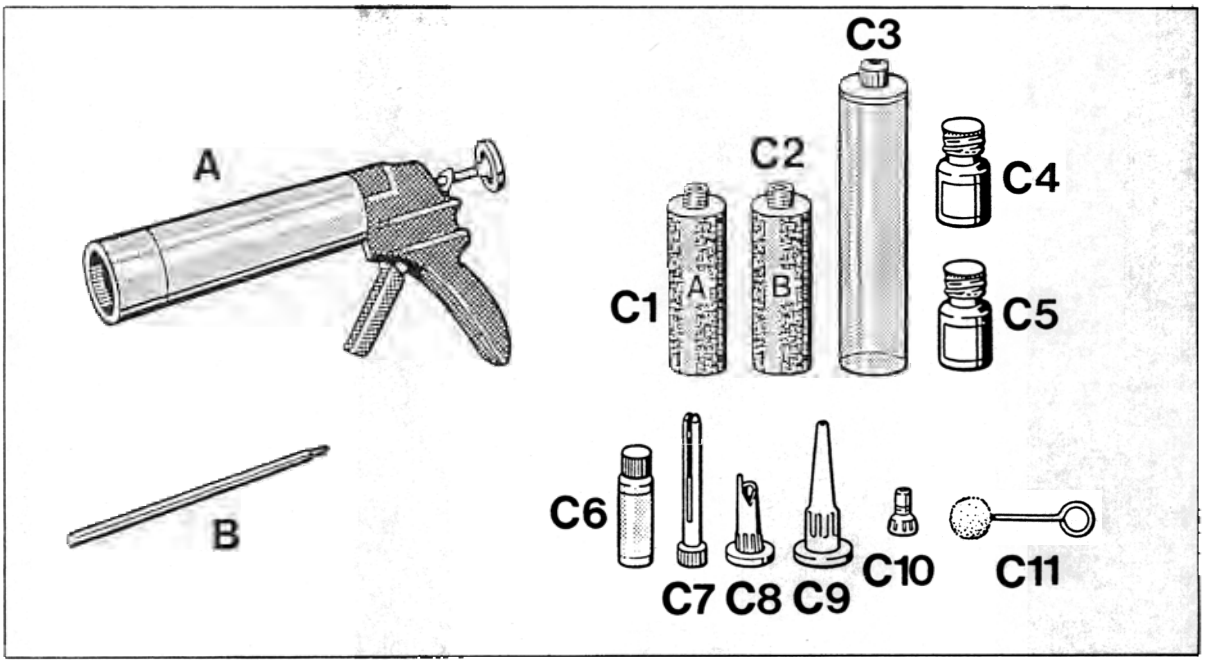

A	Bonding gun	VAG 1628	e.g. VW Werk AG KD-Gerätevertrieb
B	Mixing rod 9528	000.721.952.80	Porsche Part dept.
C	Bonding set	999.915.509.40	

Bonding set contents:

C 1 = Cartridge component A
C 2 = Cartridge component B
C 3 = Mixing cartridge
C 4 = Primer
C 5 = Activator
C 6 = Cleaning solution
C 7 = Injector nozzle
C 8 = Application nozzle
C 9 = Application nozzle
C 10 = Filling nozzle
C 11 = Touch-in tool

66 58 55 Replacing rear spoiler

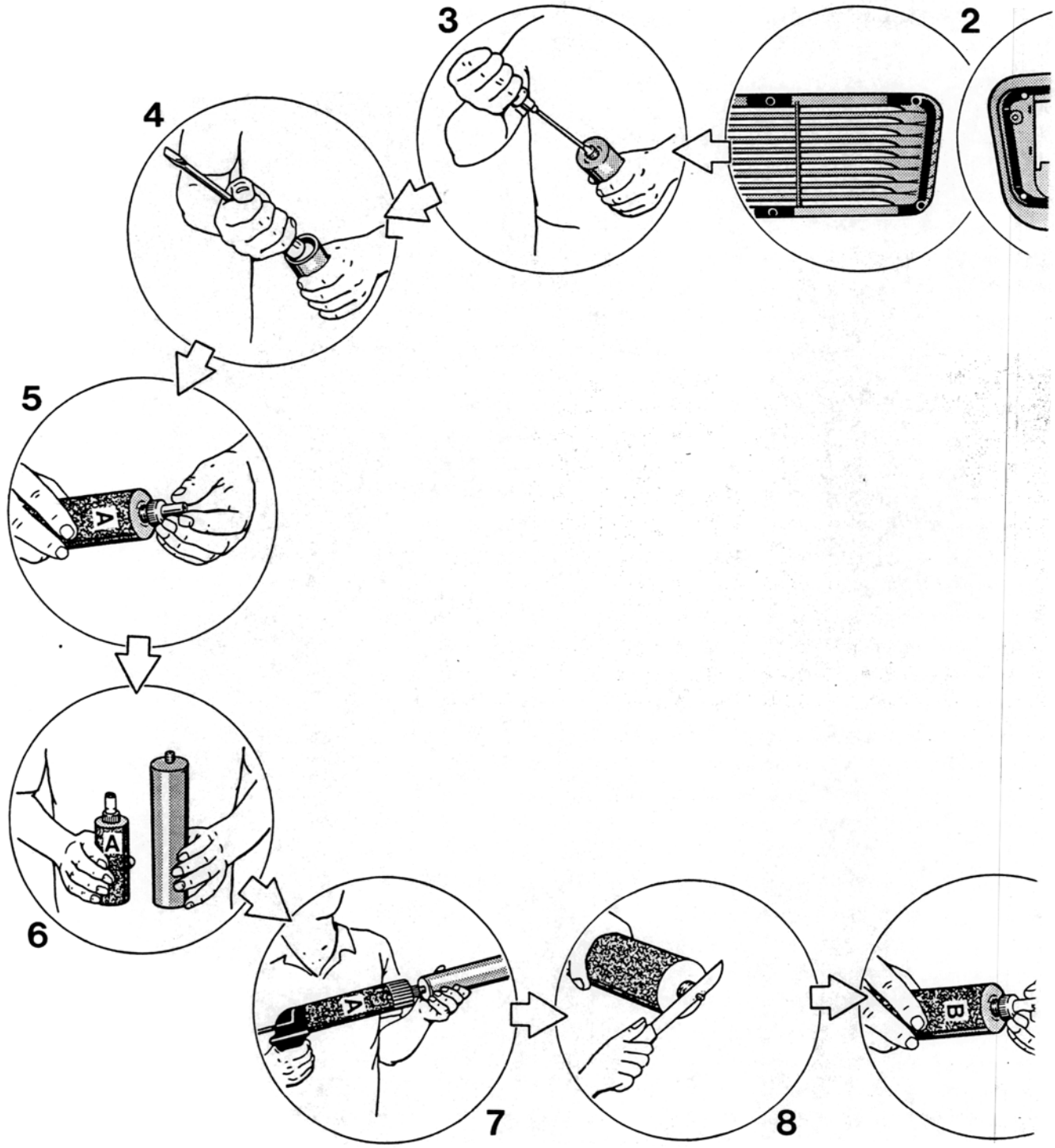

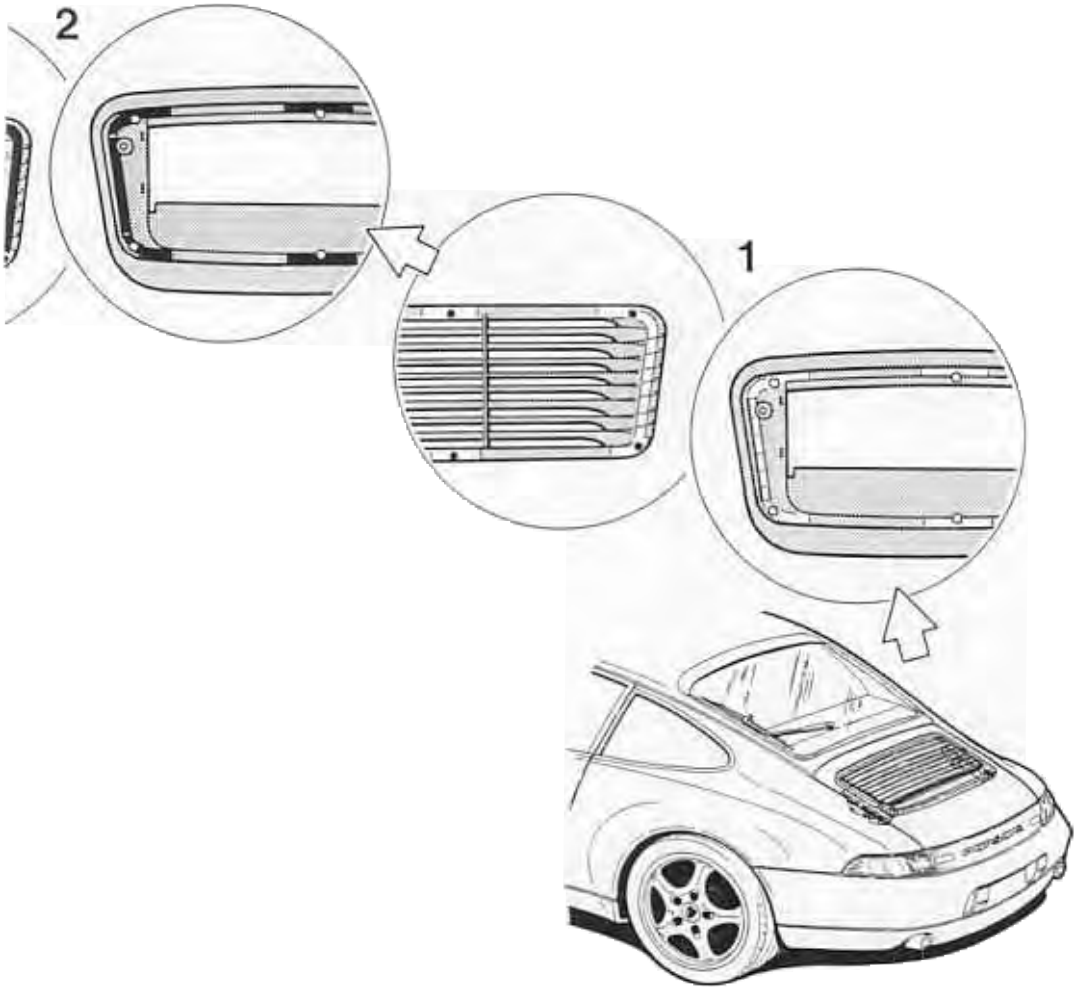

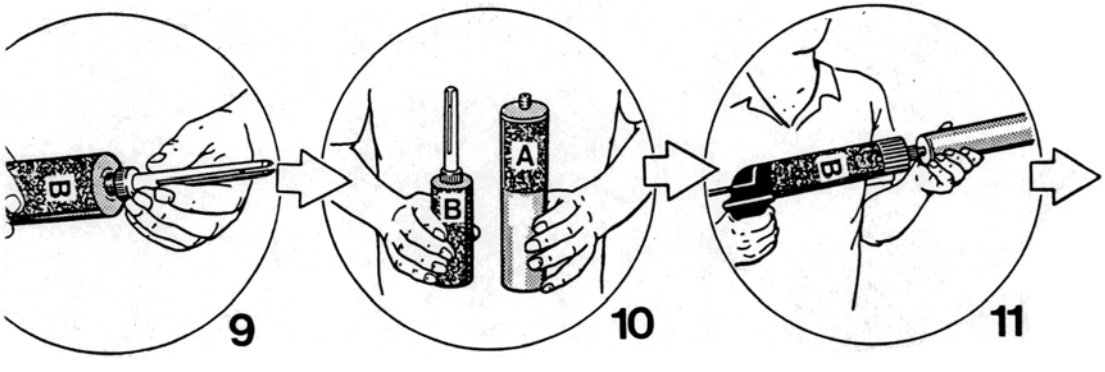

1768 - 66

66 58 55 Replacing rear spoiler

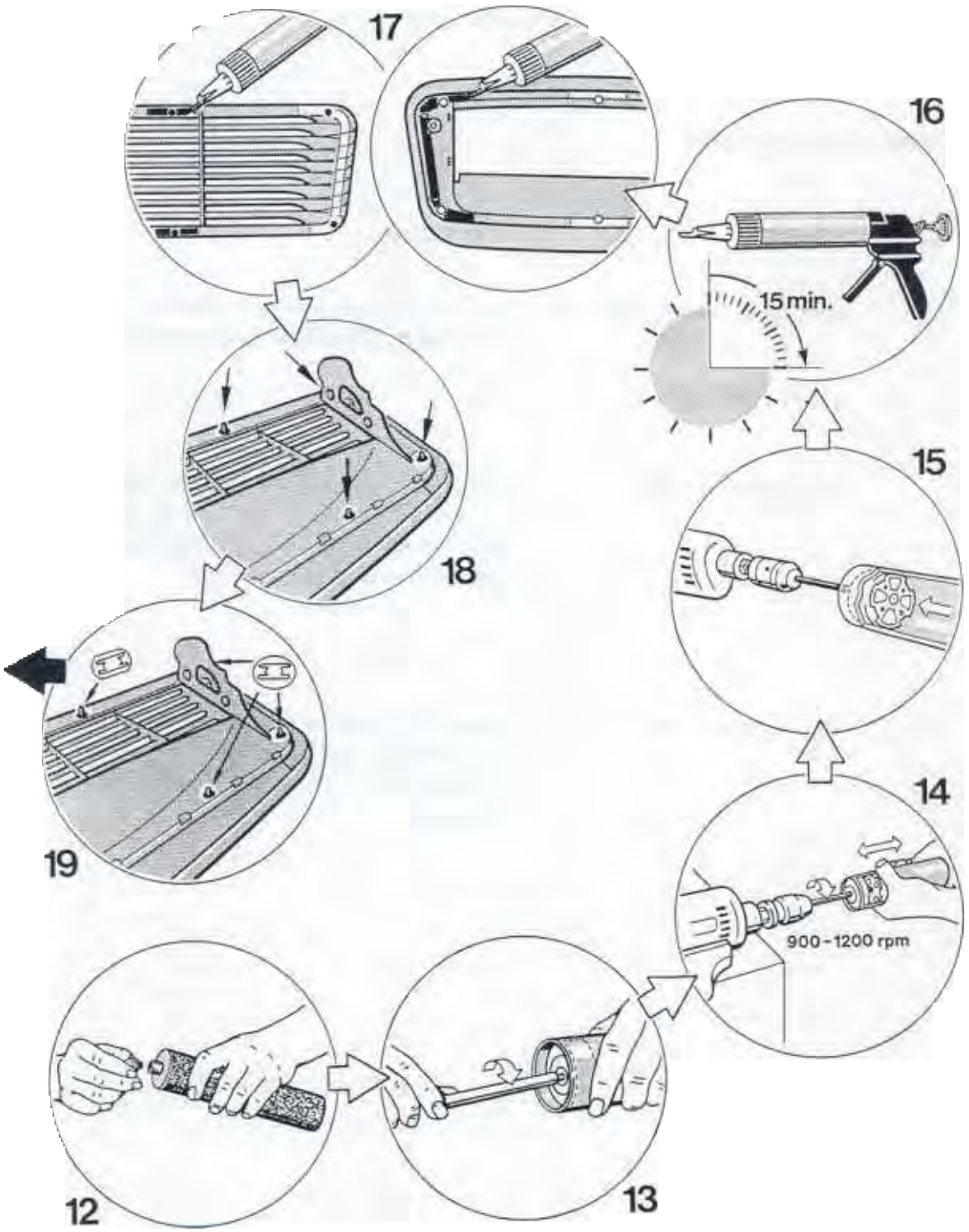

66 58 55 Replacing rear spoiler

The rear spoiler (outer rear spoiler section) must be painted prior to fitting!

Bonding rear spoiler outer section and spoiler grille

Preparing bonding areas

No.	Operation	Instructions
1	Sand down bonding areas	Sand down bonding areas on rear spoiler outer section and spoiler grille with sanding paper, **P 80 grit.**
	Clean sanded areas	Clean sanded areas on rear spoiler outer section and spoiler grille thoroughly with cleaning solution (C6). **Caution: Make sure no cleaning solution residues remain on the spoiler sections!**
2	Prime bonding areas	Apply a thin, even coat of primer (C4) to bonding areas of rear spoiler outer section and spoiler grille. **Caution: Allow a flash-off time of at least 10 minutes!**

Preparing the bonding cartridge for application of adhesive

No.	Operation	Instructions
3	Open nozzle fitting on cartridge containing component A	Use a screwdriver to pierce the diagphragm of the nozzle connection of cartridge containing component A (C1).
4	Open flanged cover of cartridge containing component A	Use the screwdriver handle to pierce the flanged cover at the end of the cartridge containing component A (C1).
5	Screw filling nozzle onto cartridge containing component A	Screw filling nozzle (C10) onto cartridge containing component A (C1).
6	Place cartridge containing component A into the bonding gun	Place cartridge containing component A (C1) into bonding gun (A). Remove screw-on cap of mixing cartridge (C3).
7	Press component A into mixing cartridge	Place filling nozzle (C10) of cartridge containing component A (C1) into mixing cartridge (C3). Use bonding gun (A) to press component A into mixing cartridge (C3).
8	Open nozzle fitting of cartridge containing component B	Use a knife to cut off the tip of the nozzle fitting of the cartridge containing component B (C2).
9	Screw injector nozzle onto cartridge containing component B	Screw injector nozzle (C7) onto cartridge containing component B (C2).
10	Place cartridge containing component B into bonding gun	Place cartridge containing component B (C2) into bonding gun (A).

No.	Operation	Instructions
11	Press component B into mixing cartridge with component A	Insert injector nozzle (C7) of cartridge containing component B (C2) into mixing cartridge (C3). Use bonding gun (A) to press component B (C2) into mixing cartridge (C3) with component A.
12	Close mixing cartridge	Pull injector nozzle (C7) out of mixing cartridge (C3) and close mixing cartridge with screw-on cap.
13	Screw mixing rod into mixing cartridge	Screw mixing rod (B) **manually** into internal thread of mixing disc of mixing cartridge (C3). Clamp other end of mixing rod in a drill chuck. Fit the power drill in a suitable clamping device.
14	Mix component A und component B	Switch on drill (speed 900 to 1200 rpm) and rotate mixing cartridge 25 times from stop to stop. **Perform all 25 double strokes fairly rapidly!**
15	Engage mixing disc into piston	Pull back mixing cartridge until a rattling sensation is felt. Switch off drill and screw mixing rod out of mixing cartridge. This will cause the mixing disc to engage into the piston of the mixing cartridge.
16	Place mixing cartridge into bonding gun	Insert mixing cartridge with mixed 2-pack adhesive into bonding gun. Screw application nozzle (C8) onto mixing cartridge.

Caution: Observe open time of 15 minutes!

Open time is the time available for application of the adhesive and for assembling the spoiler components.

Assembling the spoiler parts

No.	Operation	Instructions
17	Apply adhesive	Apply 2-pack adhesive with the bonding gun to the rear spoiler outer section – in the right and left-hand areas – to a minimum thickness of **3 mm**. Apply 2-pack adhesive with the bonding gun to the spoiler grille – in the areas on the right and left of the locating pins (length approx. 40 mm) – to a minimum thickness of **3 mm**.
18	Assemble spoiler parts	Place spoiler grille into rear spoiler outer section and adjust with locating pins. Gap adjustment and height offset on the **outside** between the rear spoiler outer section and spoiler grille must be identical along the entire circumference.
19	Locate spoiler grille	Locate spoiler grille to the rear spoiler outer section at the locating pins by pressing the spring nuts into place.
	Clean areas of vision	Any adhesive that has squeezed out must be removed immediately and the affected areas of vision must be cleaned with cleaning solution (C5).
	Shorten lower locating pins	Shorten lower locating pins (5 ea.) after the **curing time** (1 hour) has elapsed so that they are flush with the spring nuts.

66 31 19 Removing and installing the sill cover

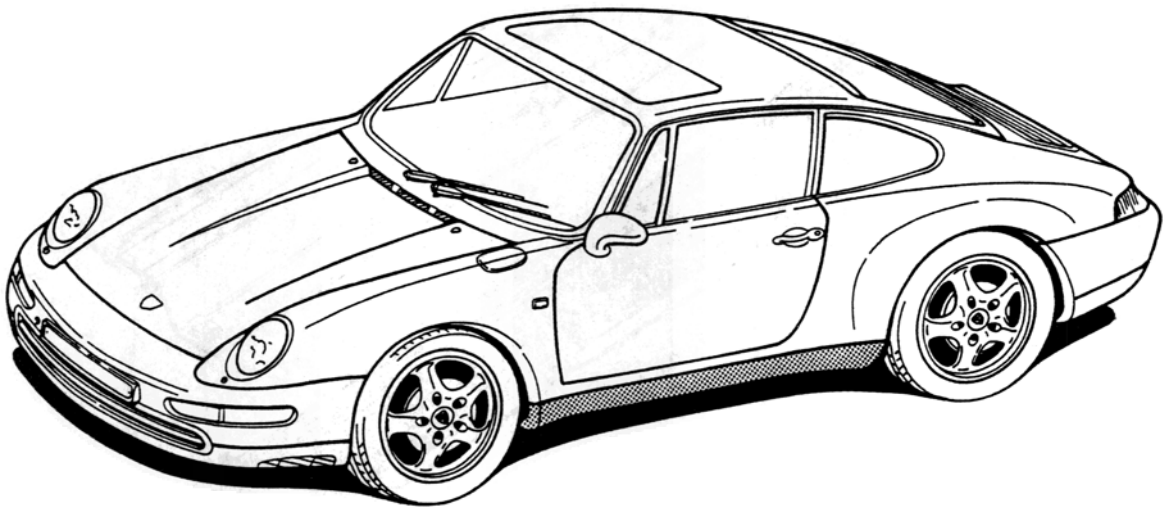

66 3 9 Removing and installing the si cover

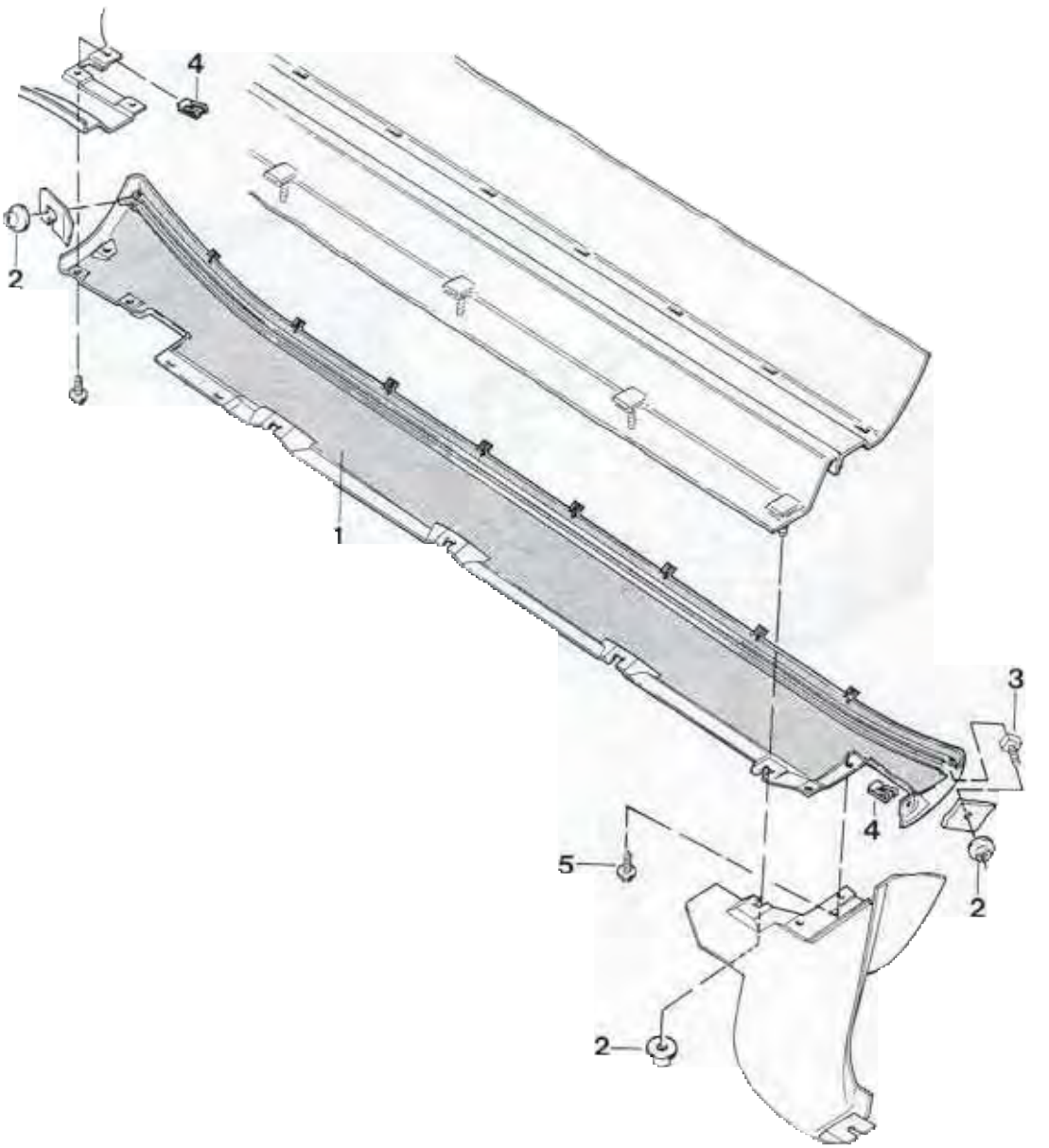

66 31 19 Removing and installing the sill cover

Before removing the sill cover, the front wheel housing liners, rear wheel housing liners and the underbody paneling must be undone partially!

No.	Designation	Qty.	Note: Removal	Installation
1	Sill cover	2	Fold lower sill cover outward and pull out of locating slots in door sill	Engage sill cover into locating slots, fold inwards and lock with item No. 2
2	Plastic nut T 5	12		Check, replace if required
3	Bracket T 5 - 4.8	4	Push out of locating holes in body	Push into locating holes in body
4	Self-tapping nut B 4.8	10		Adjust to hole center
5	Combination self-tapping screw	12		

66 38 19 Removing and installing roof cover

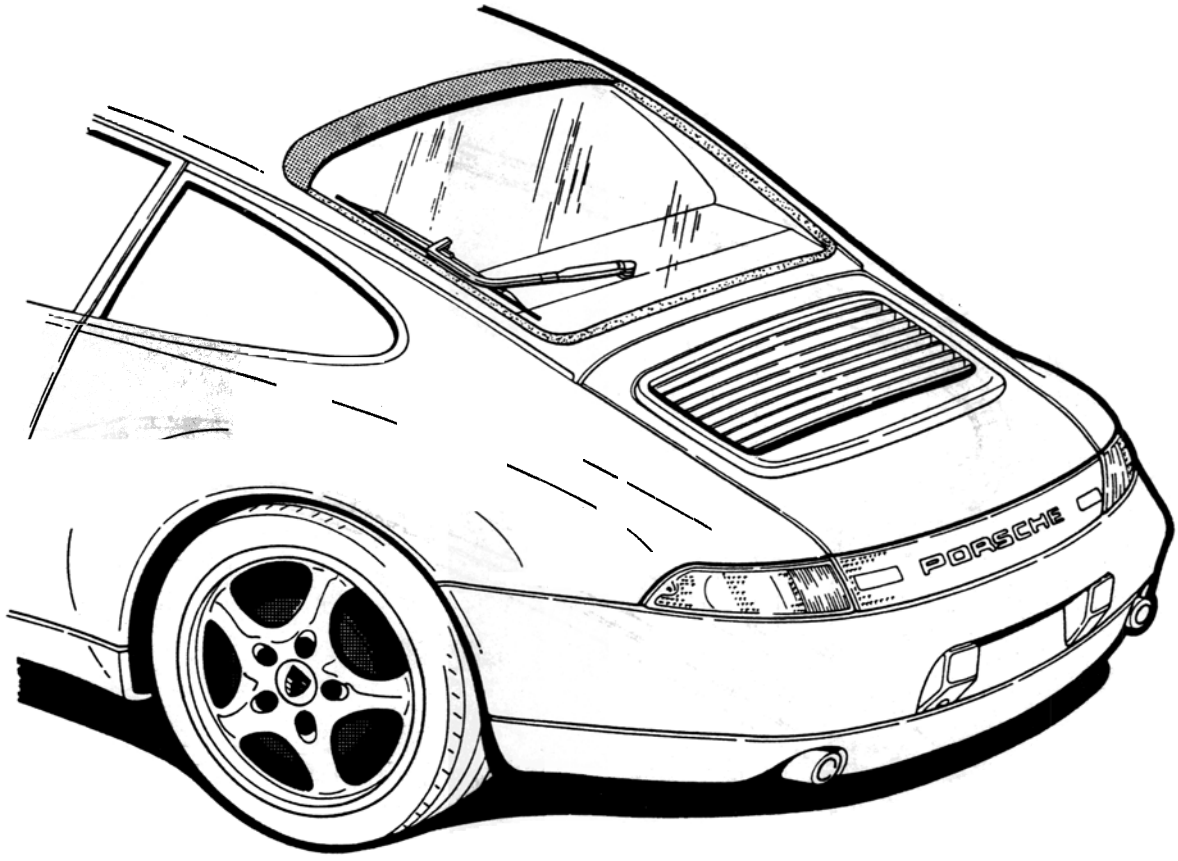

66 38 19 Removing and installing roof cover

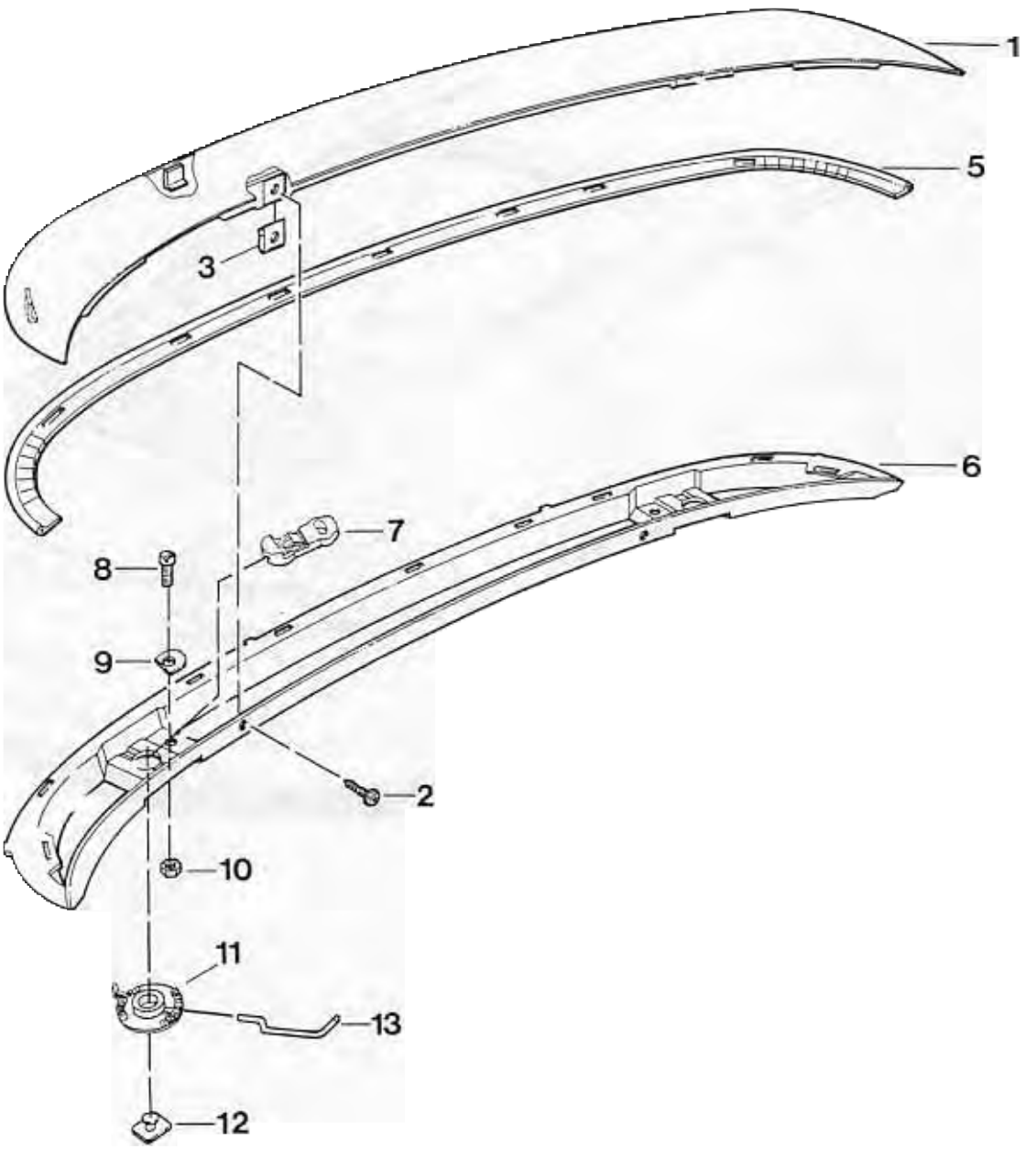

66 38 19 Removing and installing roof cover

No.	Designation	Qty.	Note: Removal	Installation
1	Roof cover	1	Screw out item 2 and unclip roof cover from item 6	Clip roof cover into item 6 and tighten with item 2. To adjust height of roof cover, turn item 11 with item 13
2	Screw with washer St 3.5 x 13	2		
3	Sheetmetal nut 3.5	2		Adjust to center of hole
4				
5	Piping	1	Detach from item 1	Replace, bonod to roof cover according to cover contours
6	Reinforcing frame	1	Screw out item 8, unclip item 7 and lift reinforcing frame off item 12	Place onto item 12, clip item 7 into position and tighten reinforcing frame with item 8
7	Retaining clip	2		
8	Fillister head screw A M 5 x 14	2		
9	Tab washer	2		Replace
10	Nut M 5	2		
11	Adjusting element	2		Insert actuating pin (item 13)
12	Lock pin	2		
13	Actuating pin (shop-made tool)	2		Used for height adjustment of roof cover

Shop-made tool: "Actuating pin"

The actuating pin is required to adjust the height of the roof cover at the adjuster.
This actuating pin should be fabricated in the shop from 2 mm sheet steel.

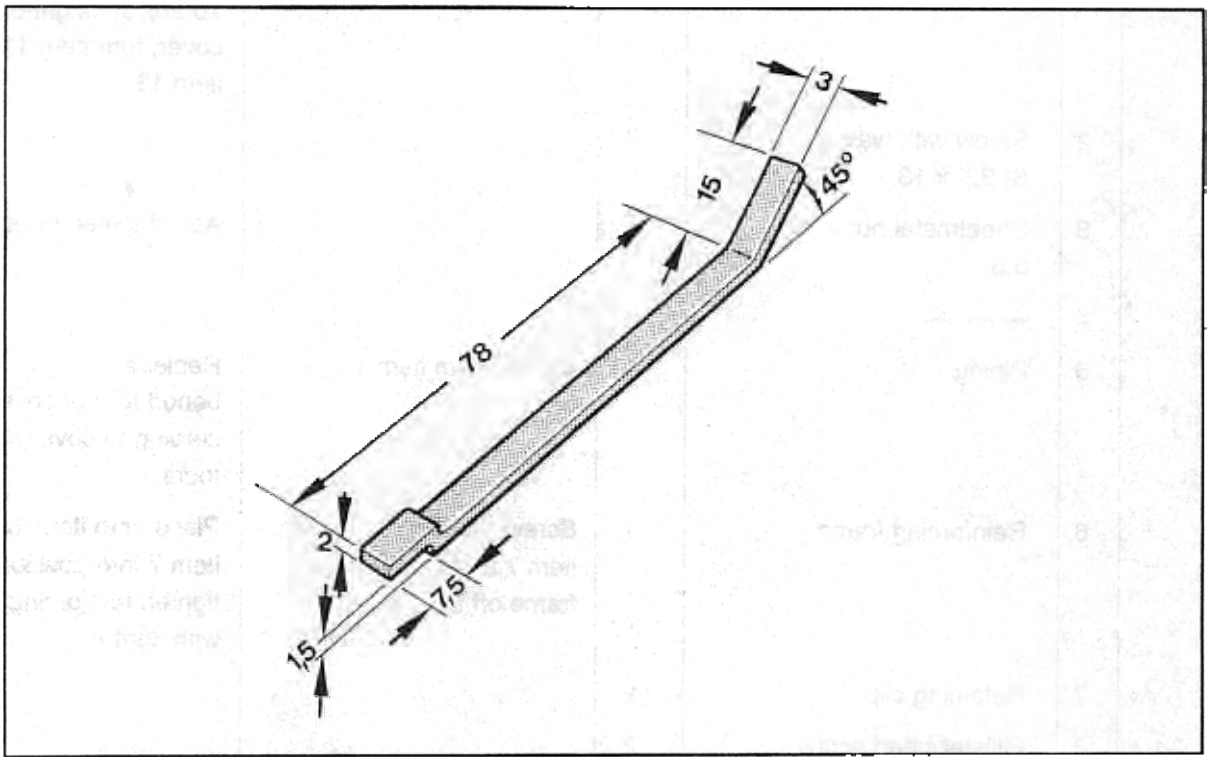

Recommended material: **BL 2.0 CK 67 DIN 17222**

66 40 23 Installing support for auxiliary stop light

The following spare parts are required for fitting the auxiliary stop light:

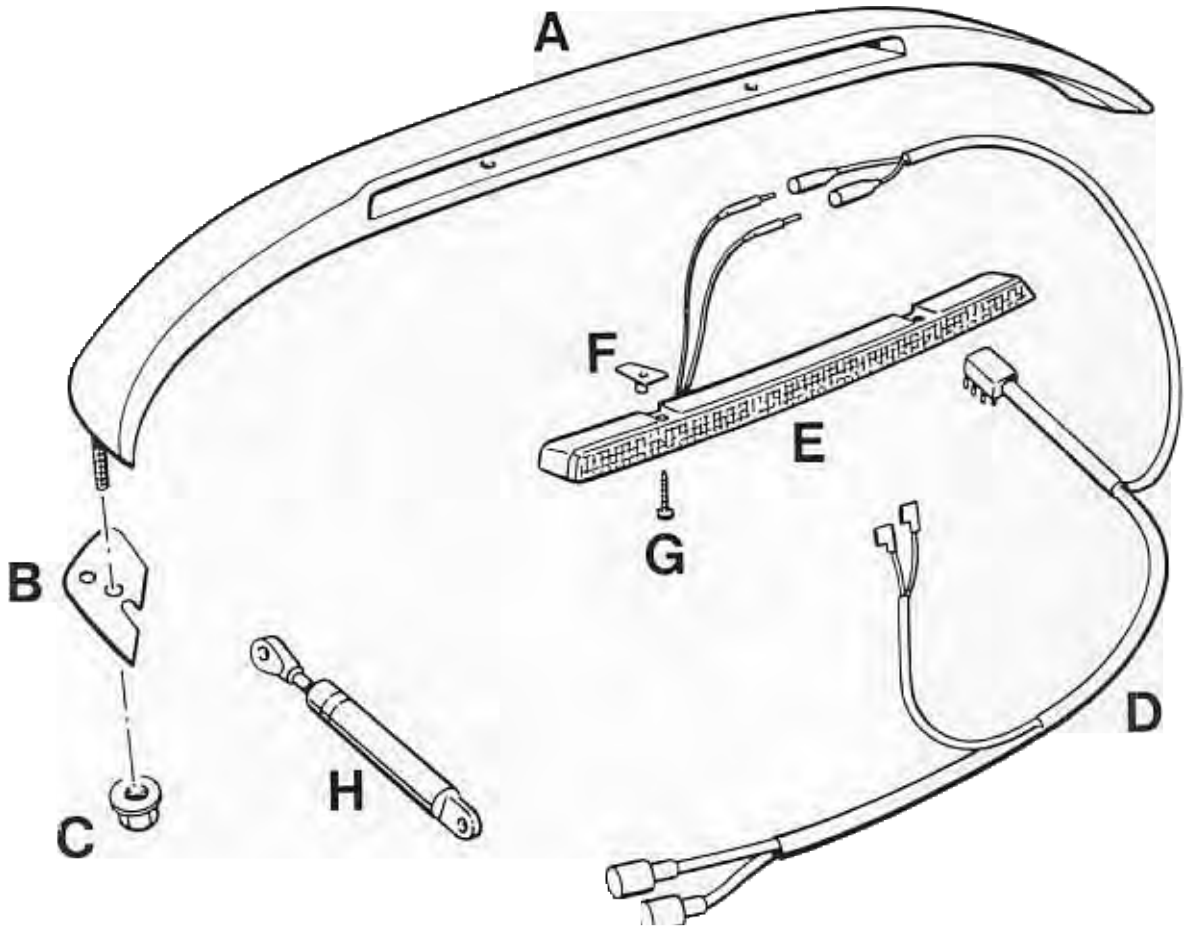

A = Lamp holder
B = Spacer
C = Flange nut
D = Wiring harness
E = Stop light
F = Fastener
G = Oval-head sheetmetal screw
H = Gas spring

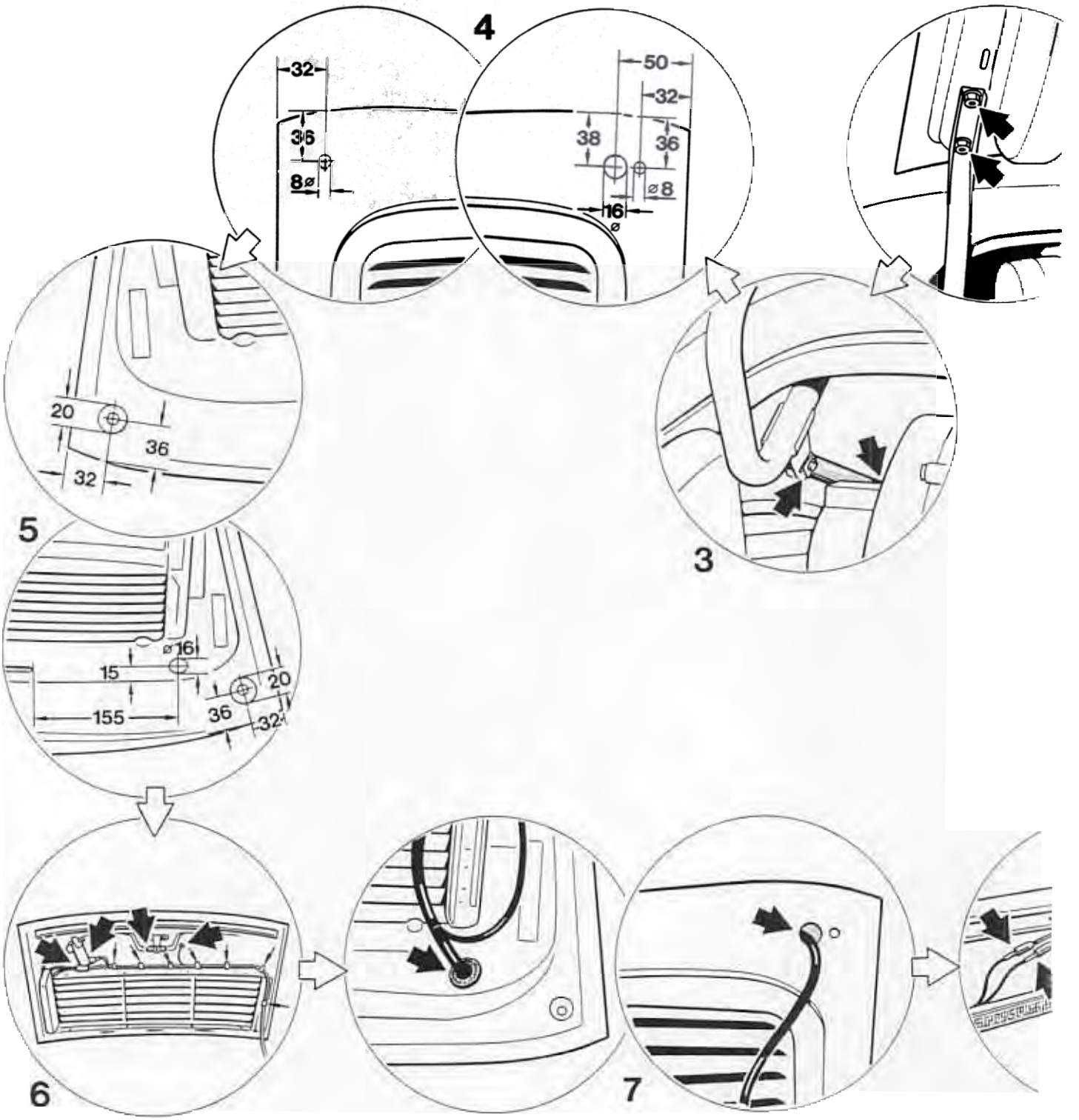

Printed in Germany – VI, 1994

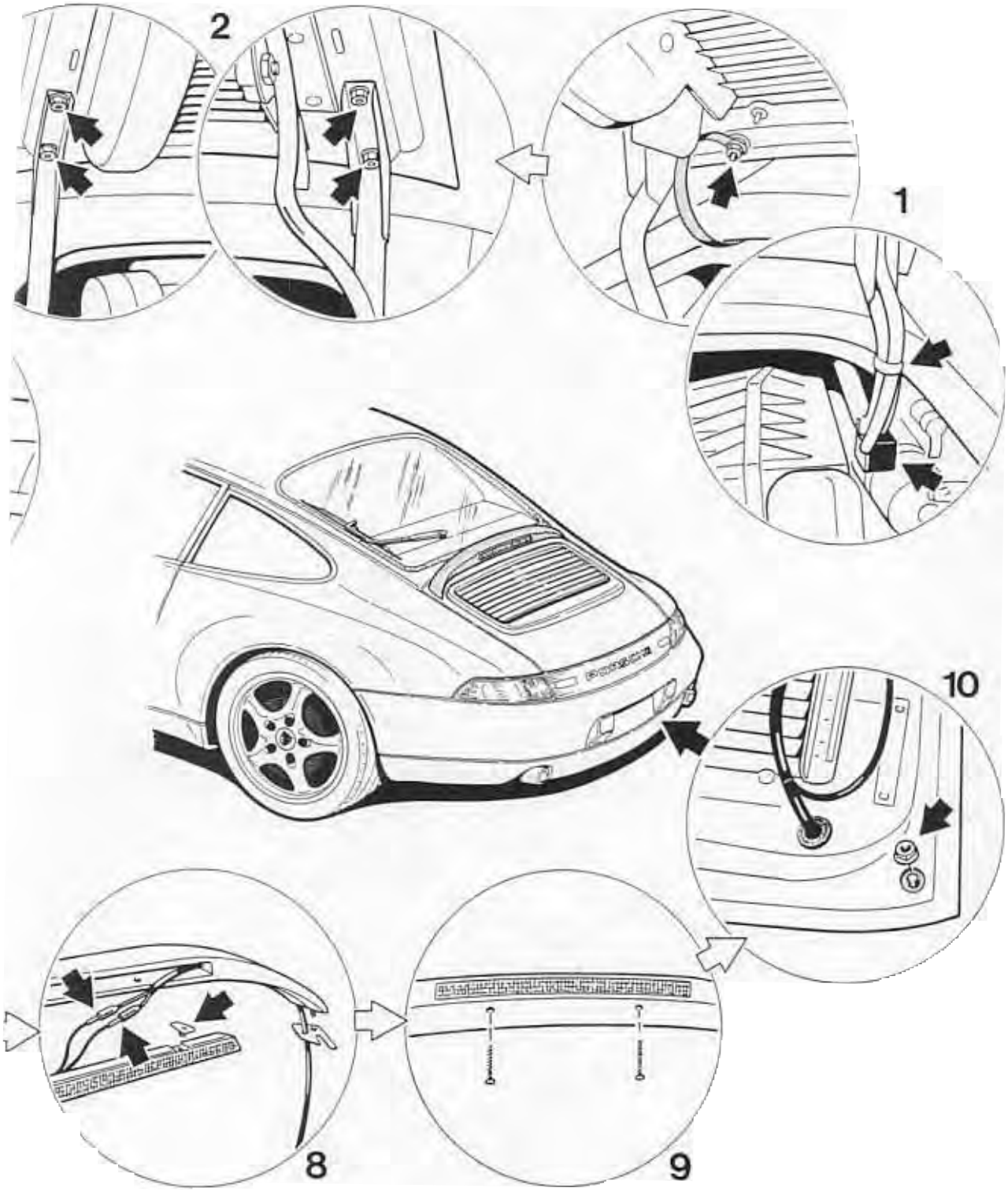

Printed in Germany – VI. 1994

Installing support for auxiliary stop light

To fit the auxiliary stop light, remove the rear cover, the gas springs and the wiring harness of the rear cover.

The auxiliary stop light can be fitted both to the Coupe and to the Cabriolet.

No.	Operation	Instructions
1	Disconnect electrical connectors	Unclip cap from wiring harness connector, disconnect connector and pull wiring holder from hinge. Screw out ground strap mounting nut.
2	Remove cover	Screw out mounting bolts and lift cover off the vehicle. Place cover on a soft, clean support.
3	Replace gas springs	Remove retaining clips and pins. Remove left and right gas springs, fit **shorter** gas springs and refit them with pins and retaining clips.
4	Drill mounting holes for support and wiring harness passage (outside)	Mark outside hole positions on left and right side of cover, centerpunch, drill, deburr and touch-up bare metal spots with paint.
5	Drill mounting holes for support and wiring harness passage (inside)	Mark inside hole positions on left and right side of cover, drill, deburr and touch up bare metal spots with paint.
6	Replace wiring harness	Unclip engine compartment lamp from cover and disconnect connector. Unclip limit switch connector and disconnect limit switch and drive motor connector. Unclip wire bracket. Refit wiring harness with auxiliary stop light connection.
7	Route wiring harness section to auxiliary stop light inside cover	Route wiring harness through hole on inside of cover. Place grommet into position and route harness towards outside across hole in cover.
8	Route wiring harness section to auxiliary stop light across holder	Route wiring harness across spacer and lamp support. Clip fasteners into auxiliary stop light and reconnect wires at auxiliary stop light.

No.	Operation	Instructions
9	Install auxiliary stop light	Place auxiliary stop light into lamp holder and fit into place with 3.5 x 20 oval-head sheetmetal screws.
10	Install lamp holder	Fit spacers onto mounting studs of lamp holder. Engage mounting studs of lamp holder across mounting holes in outer cover panel and tighten from inside with VM6 mounting flange nuts. Refit cover and reconnect wiring.

Printed in Germany – VI, 1994

66 38 13 Fastening roof cover

Bonding locking bolts to rear window

The following tools, materials and spare parts are required for bonding the locking bolts to the rear window.

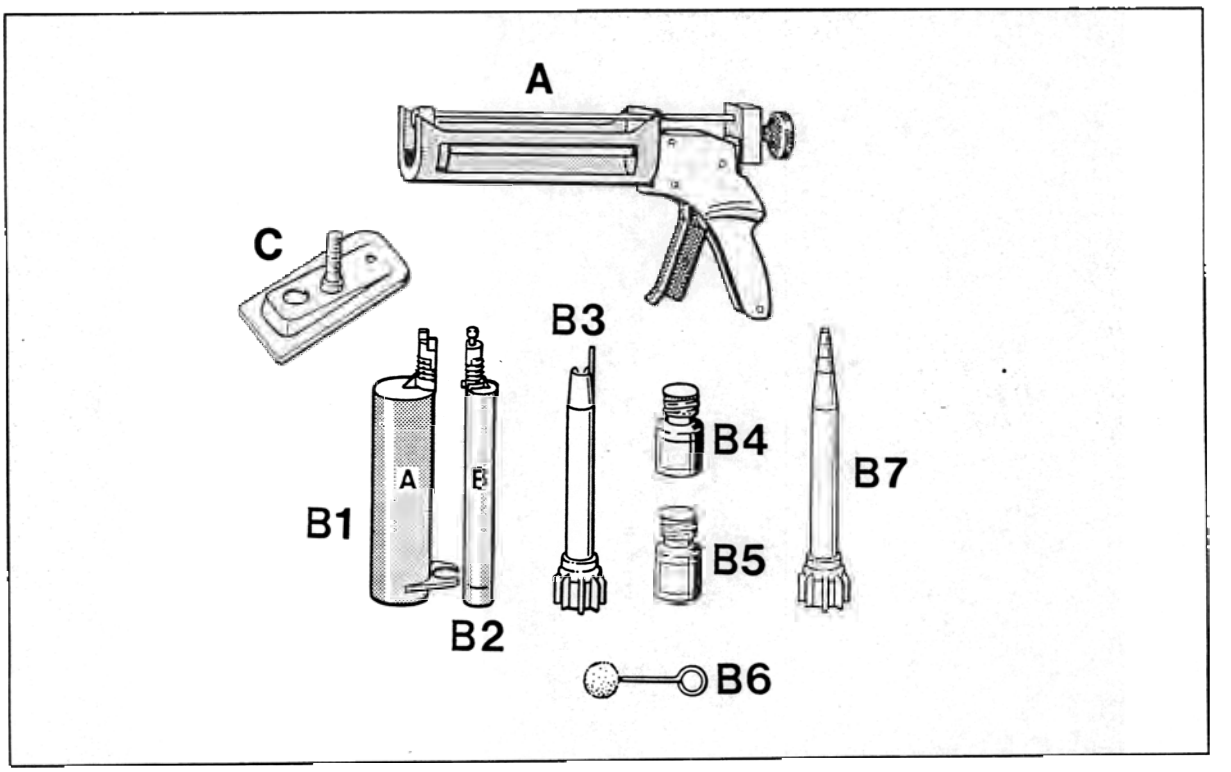

A = bonding gun
B = adhesive set

Contents of adhesive set:
B1 = cartridge with component A
B2 = cartridge with component B
B3 = mixing tube (for window)
B4 = primer
B5 = activator
B6 = swab
B7 = mixing tube (for locking bolts)
C = locking bolts

Bonding locking bolts to rear window

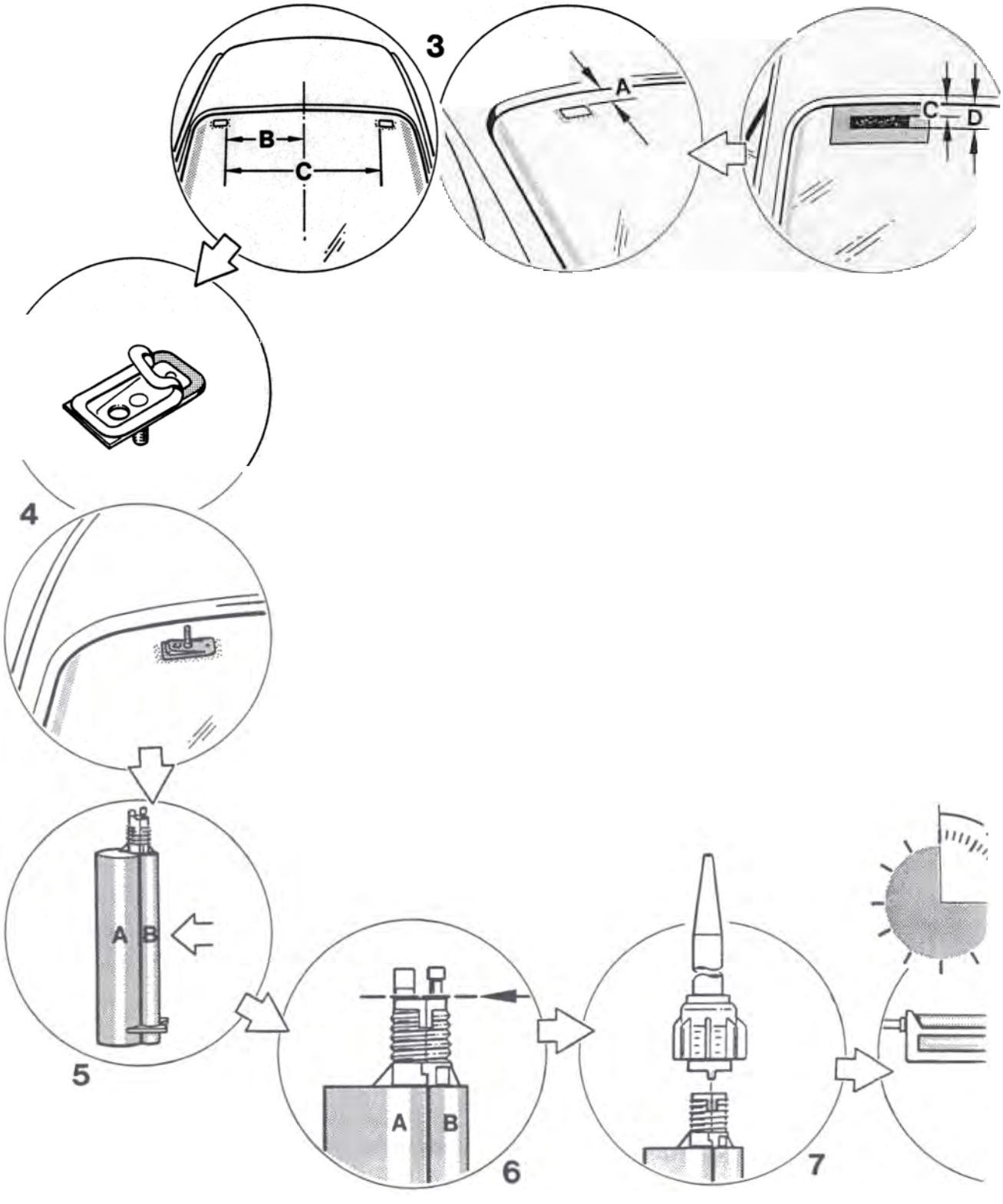

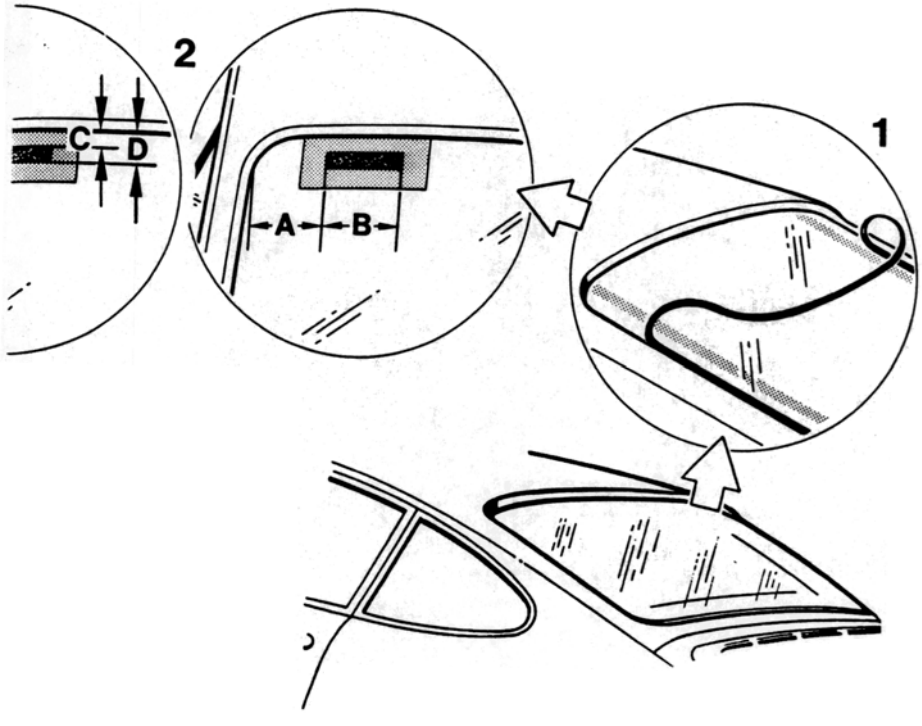
2
C
D
A
B
1

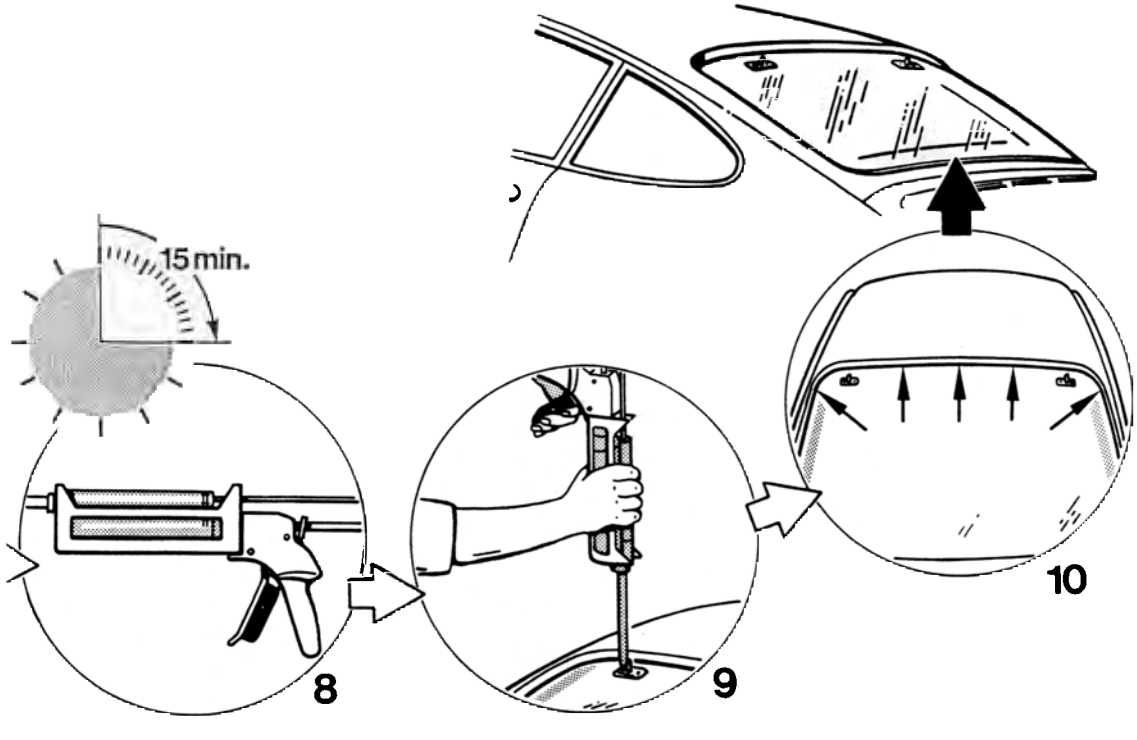
15 min.
8
9
10

Bonding locking bolts to rear window

The locking bolts can only be bonded in place with the rear window installed.

No.	Operation	Instructions
1	Pull out cover strip; clean rear window and locking bolts.	Pull out cover strip at top of rear window. Clean the top of the rear window and the bonding areas of the locking bolts.
2	Mask off rear window and apply primer.	Mask off rear window for primer application in accordance with dimensions **A** to **D** using masking tape and apply a thin even coat of primer to these areas using the swab. Dimension A = 120 Dimension B = 100 Dimension C = 25 Dimension D = 65 Allow the primer to evaporate for at least 5 minutes. Then remove the masking tape from the rear window.
3	Position locking bolts on rear window.	Mark the centre of the vehicle on the rear window. Position the locking bolts on the rear window in accordance with dimensions **A** to **C** and mark the positions. Dimension A = 31 Dimension B = 306 Dimension C = 612
4	Fix locking bolts on rear window.	Remove the backing tape of the two-sided adhesive tape at the bottom of the locking bolts and press the locking bolts onto the rear window in the marked positions applying a force of **50 N.** To monitor application, place the reinforcement frame over the locking bolts.
5	Clip cartridges with components A and B together.	Clip the component B cartridge to the component A cartridge.

No.	Operation	Instructions
6	Open assembled cartridge.	Cut the closures of the two cartridges off level using a knife.
7	Install mixing tube.	Push mixing tube B7 into the groove on the assembled cartridge and screw it into place using the union nut.
8	Place cartridges in bonding gun.	Place the assembled cartridge with mixing tube in the bonding gun.
	Prepare mixing tube.	Cut the end of the mixing tube so that there is an opening with a diameter of 8 mm for the adhesive.
9	Bond locking bolts to rear window.	Place the opening of the mixing tube on the large hole in the locking bolt. Fill adhesive into the space between rear window and locking bolt until adhesive emerges from the small hole in the locking bolt.
10	Install cover strip.	Press the cover strip into the mounting section on the top of the rear window.
	Cut excess adhesive off locking bolt.	Cut adhesive which has emerged from the small opening in the locking bolt off using a sharp knife before installing the reinforcement frame.

Caution

The adhesive bond will not become firm immediately. To ensure a sufficiently strong bond, the following conditions are important.

Hardening time	3 hours
Temperature	at least 10° C
Bonding time	about 1 hour

The vehicle must not be used before the end of the bonding time!

68 27 13 Bonding interior rearview mirror into place

The following materials are required for bonding the complete interior rearview mirror into place:

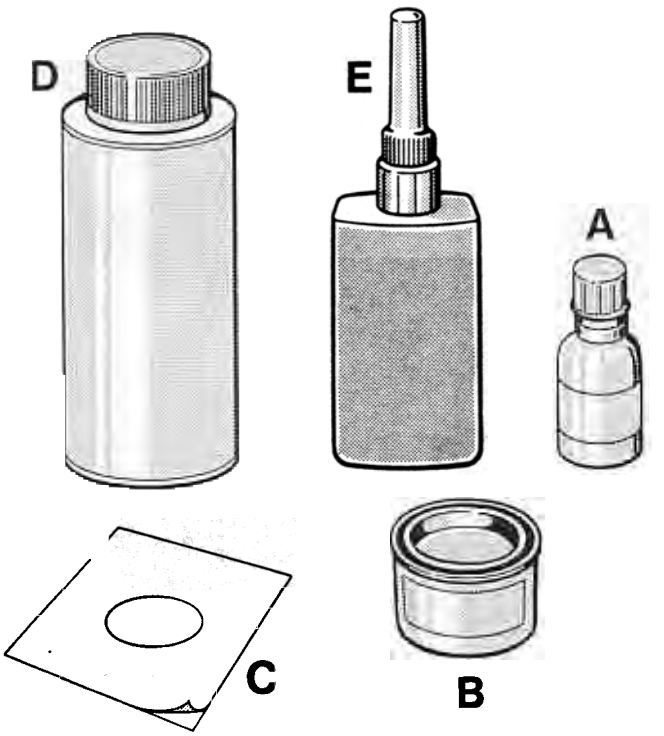

A = **Cleaning solution** (000.043.157.00)*

B = **Primer** (000.043.158.00)*

C = **Cover sheet** (000.043.177.00)*

D = **Activator** (000.043.052.00)*

E = **Adhesive** (000.043.051.00)*

* Porsche Part No.

68 27 13 Bonding interior rearview mirror into place

Bonding assembled interior rearview mirror to the windshield

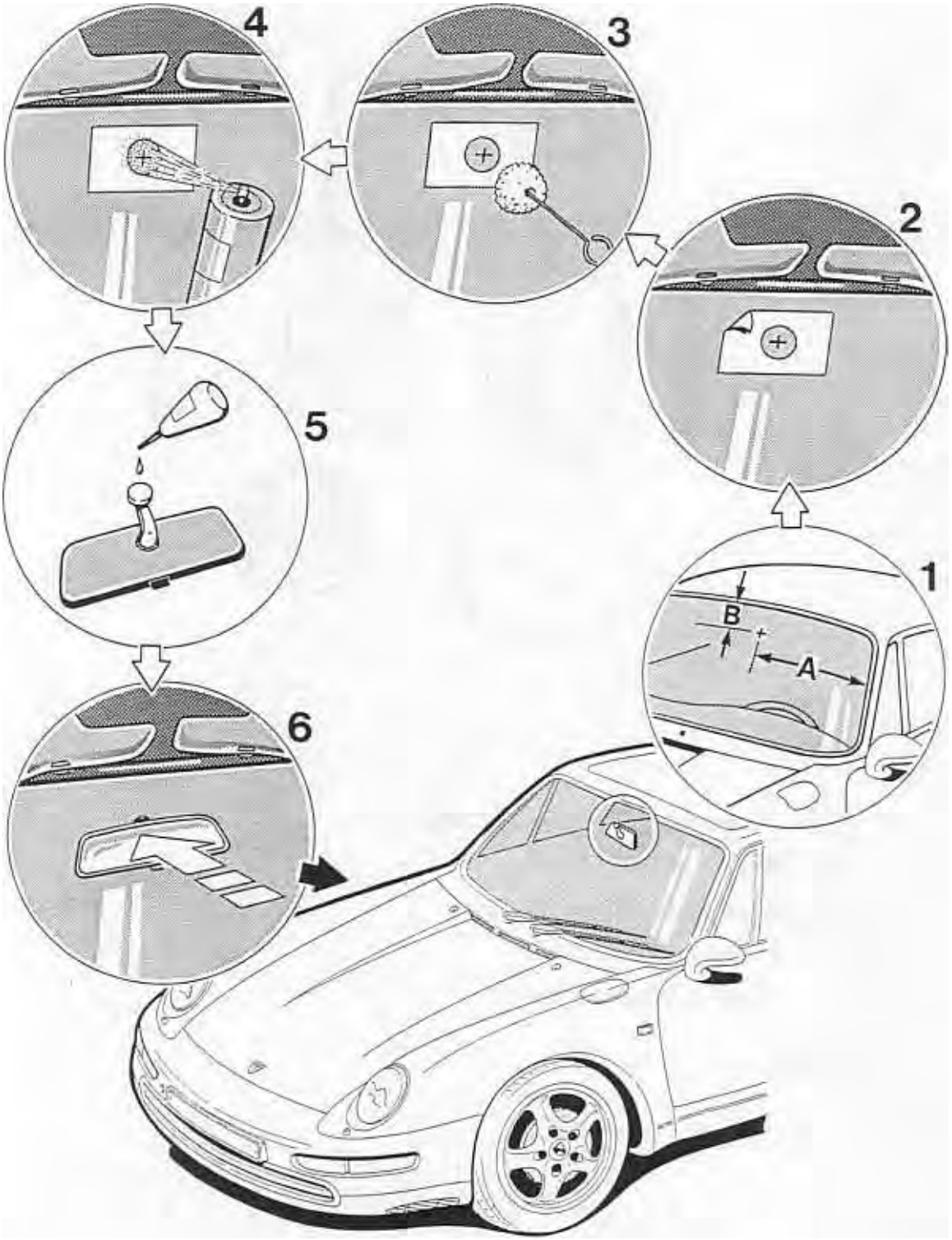

68 27 13 Bonding interior rearview mirror into place

Bonding assembled interior rearview mirror to the windshield

No.	Operation	Instructions
1	Mark position of interior rearview mirror	Mark position of adhesive plate on outside of windshield. **Dimension A = 586 mm** **Dimension B = 120 mm**
	Remove adhesive residues	Remove adhesive residues mechanically from windshield using a scraper. Remove adhesive residues mechanically from adhesive plate of interior mirror using a scraper.
	Roughen adhesive plate of interior rearview mirror	Roughen adhesive plate of interior mirror mechanically using sanding paper.
	Clean adhesive plate of interior rearview mirror	Clean adhesive plate of interior rearview mirror with **cleaning solution** (A).
	Clean bonding area on windshield	Clean bonding area on windshield with cleaning solution (A).
2	Mask off bonding area on windshield	Mask off bonding area on windshield with **primer template** (cover sheet C). The mark for positioning the interior rearview mirror must remain visible in the center of the primer template.
3	Prime bonding area of windshield	Prime masked bonding area of windshield with a thin, even coat of **primer** (B). **Caution: Allow a flashoff time of 15 to 20 minutes!**

No.	Operation	Instructions
4	Activate bonding area on windshield	Spray bonding area on windshield with **activator** (D). **Caution: Allow a flashoff time of 2 minutes!**
	Remove primer template	
5	Apply adhesive to adhesive plate	Apply a drop of **adhesive (E)** to adhesive plate of interior rearview mirror.
6	Bond interior mirror into place	Press interior rearview mirror with adhesive plate onto primered, activated area of windshield. **Note: Press into place for approx. 40 – 50 seconds!**
		Note: **Bonding strength** **60 % after 1 hour** **100 % after 24 hours**

68 75 02 Checking the seat belts

Operational check

When the seat belt is pulled evenly, the belt strap must roll smoothly off the automatic retractor across the guide fitting, and the plug-in latch of the seat belt must engage audibly into the belt lock. The automatic retractor must lock when the sealt belt strap is pulled with a jerk.

Checking condition

A visual inspection must not reveal any damage or wear of the belt strap. The seat belt must be replaced if the belt strap shows any damage in the form of cuts, fraying, torn seams, scuff marks etc.

68 Safety precautions for working on cars with airbag

Airbag units are pyrotechnical items of Danger Class T 1. Handling, transport and storage are subject to the legislation for explosives.

The below legal requirements refer to the Federal Republic of Germany. Be sure to observe the relevant legislation in your country at all times.

The start of work on pyrotechnical items must be reported to the Trade Supervisory Office (legal authorities) 14 days in advance.

Shipping

The shipment of airbag units may only take place in the packaging officially approved for transportation. Airbag units must not be shipped together with other dangerous items.

Within a company, transportation is only permitted in the trunk or cargo room of a vehicle using the above transport packaging. Transportation in the passenger compartment is not permitted.

Storage

Storage of airbag units must conform to the second ordinance of the German legislation for explosives. According to this ordinance, small amounts of substances and items may be stored at certain locations without a special storage permit. For pyrotechnical items of Danger Class T1, the maximum quantities are 20 kgs (gross) in workrooms and 200 kgs (gross) in storage rooms. Airbag units must be stored locked.

When storing airbag units, make sure that the padded side faces up (danger of injury if an airbag unit is ejected in case of accidental ignition).

Airbag units may not be stored together with other products classified as dangerous items (paints etc.).

Disposal of airbag units

Airbag units that have not been ignited constitute a safety and envircnmental hazard. Scrap airbag units that have not been ignited must not be scrapped but must first be ignited electrically to render them harmless.

If the airbag units cannot be ignited, return them to Porsche or to the respective importer in their original spare part transport container and by the same method of transport.

68 68 Disposal of airbag units

Airbag units are pyrotechnical components and may constitute an environmental hazard due to their explosive nature as well as due to the materials they contain.
Airbag units that have not been ignited or complete vehicles with such airbags must therefore never be disposed of via the "standard" scrapping or other disposal procedures.
The airbag units must first be rendered harmless by igniting them electrically observing all safety measures, to ensure that they cannot be used for non-authorized purposes.
If the airbag units cannot be ignited or if no sufficient facilities exist for igniting them in a safe manner, return them to Porsche or to the respective importer in their original spare part transport container and by the same method of transport.

Note

National legislation that extends beyond the scope of the above instructions must be observed and must be given priority over those instructions.

Safety measures

Ignition and preparation for ignition must be performed by qualified personnel and must be supervised by a second person responsible for the ignition process.

Observe all other accident-prevention regulations.

Ignite airbag units only in installed, original condition.

Ignite airbags only in suitable, open locations.

Use only the ignition tools intended for this purpose.

Remove all other loose items from the expansion area of the airbag.

Advise all affected personnel in advance of the noise generation.

- Keep safety distance by using the full wire length of the igniting tool.

  Connect power source only in the final preparatory step.

  Remain in front of the vehicle. This also applies to persons not concerned with this work.

  Ignite airbag with doors closed and rear cover or side windows open.

- If the ignition fails, do not approach the vehicle until a certain waiting time (approx. 3 minutes) has elapsed.

  Keep an eye on the airbags while they cool off after they have been ignited.

- Avoid skin contact with ignited airbag units.

Tools

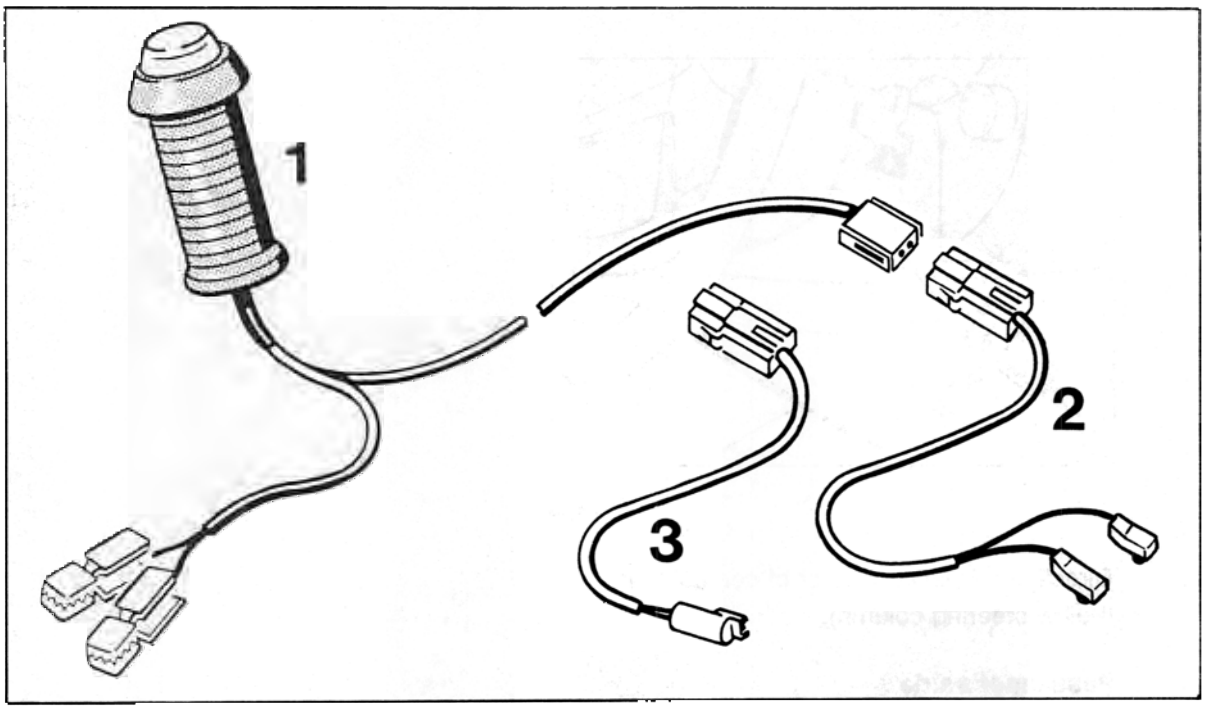

579-68

No.	Operation	Special tools	Order No.	Explanation
1	Ignition device	9257*	000.721.925.70	
2	Ignition lead	9257/1*	000.721.925.71	Consumable part
3	Ignition lead	9567	000.721.956.70	

* Order as required

Connecting ignition tools

Driver's side

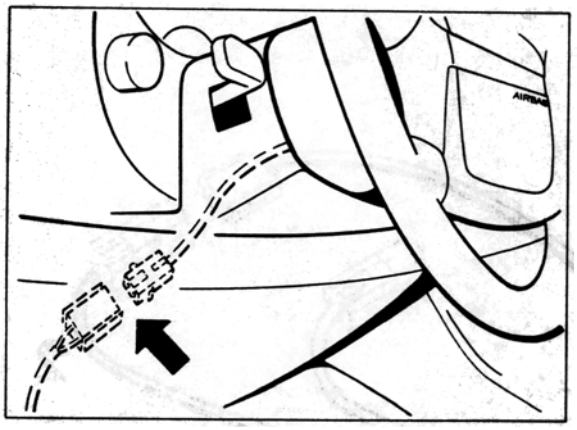

580-68

Directly to 2-pin connector of contact unit (below steering column).

Passenger's side

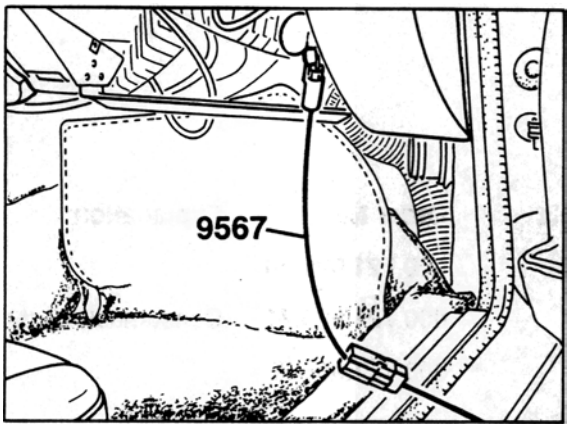

581-68

With ignition cable 9567 to gas generator.

Using the ignition lead, connect to both gas generators.
Route ignition device across door gap and place in front of vehicle.

Ignition

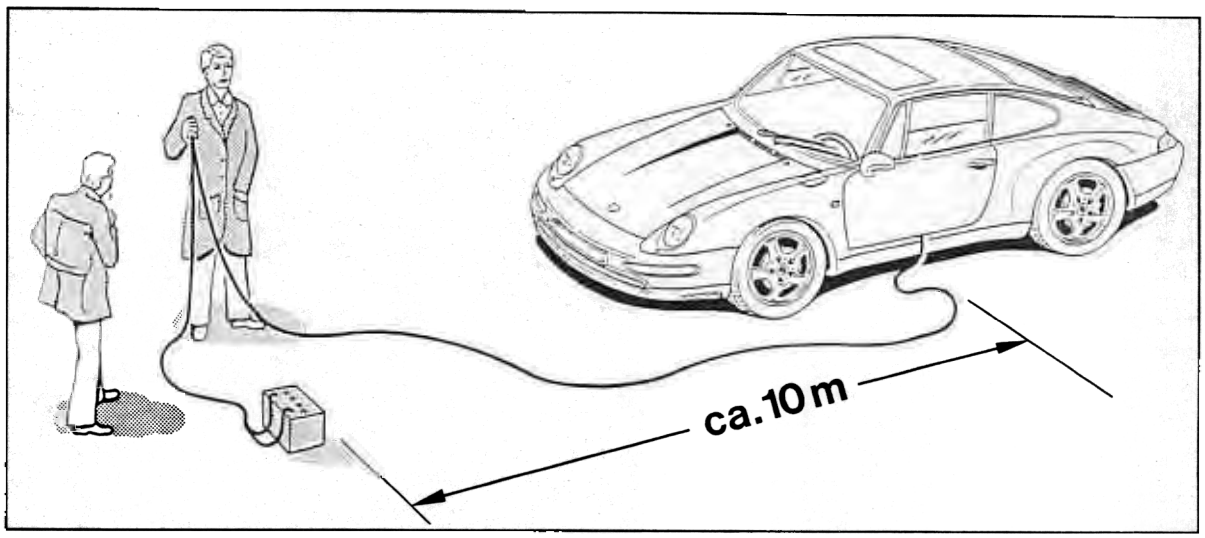

1603 - 68

Connect ignition device to a car battery and actuate button.

Note

Ignite driver's and passenger's airbags separately.

68 64 19 Removing and installing driver airbag unit

1. Disconnect battery and cover battery or battery terminal, respectively.

2. Undo fastening screws (2 ea.) with a Torx T 30 socket screwdriver.

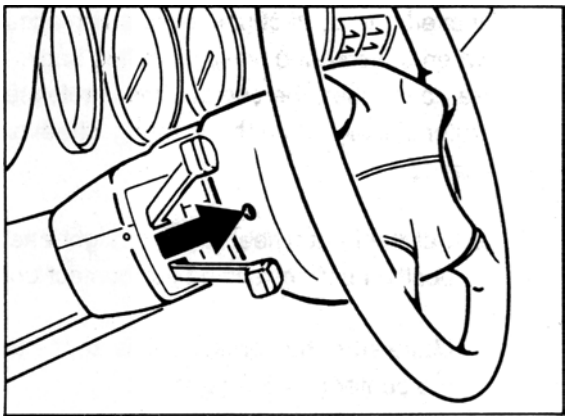

1714-68

Note

Replace the self-locking nuts whenever they have been released, undoing the retaining plate of the airbag unit (4 screws) in the steering wheel.

3. Pull off connector.

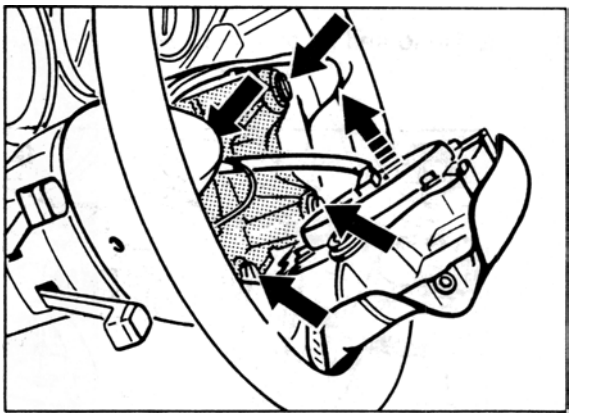

1715-68

Note

When stowing away the airbag unit, make sure the padded side faces up.

The airbag unit must be stored in a safe place when it remains removed for longer periods. Observe safety precautions.

Tightening torque for fastening screws (two M 6x16 screws): **10 Nm** (7 ftlb.)

Tightening torque for retaining plate (four M 5x20 screws): **5 Nm** (3.5 ftlb.)

68 66 19 Removing and installing contact unit

1. Remove airbag steering wheel (refer to page 48 - 5).

2. Undo and lift off trim cover.

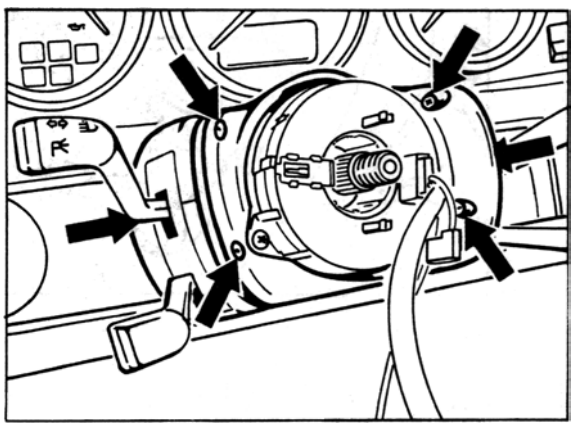

1717-68

3. Release contact unit fastening screws.

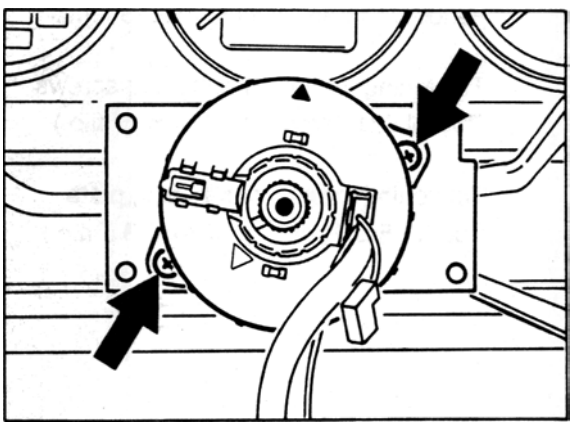

1721-68

4. Take out heating and air conditioning control with Special Tool V160 and release tie-wraps of connectors.

5. Pull out and disconnect connectors. Take off contact unit.

Note

To avoid inadvertent rotation of the contact unit after the steering wheel has been removed, the contact unit locks automatically when the steering wheel is pulled back. In the same manner, the contact unit is released automatically when the steering wheel is installed.

6. Set the front wheel to the straight-ahead position before refitting the contact unit.

7. Make sure the contact unit is kept exactly in the center position (arrows).

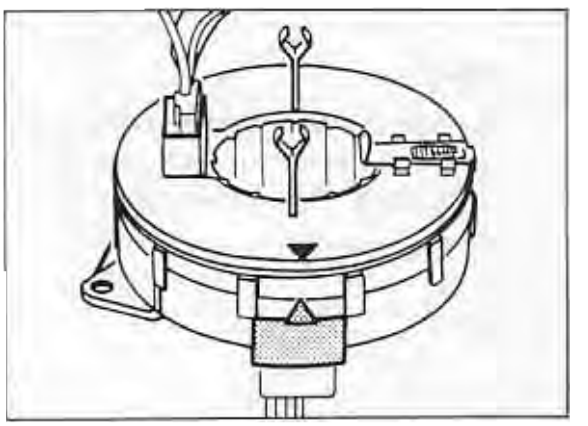

1718-68

68 63 19 Removing and installing airbag triggering unit

Note

The airbag triggering unit **must not be removed with the connector remaining connected**. When working on the airbag system, allow a **waiting time** of at least **one minute** after switching off the ignition (disconnecting the battery) and removing the connector. The triggering unit is located on the transverse wall above the center console.

1. Disconnect battery and cover terminal or battery.

2. Working from the passenger side, flip clamp open. Pull connector off the triggering unit.

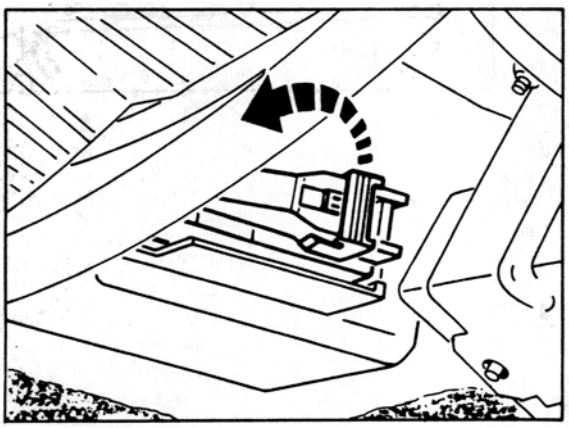

1716-68

3. Undo shear nut with Special Tool 9259.

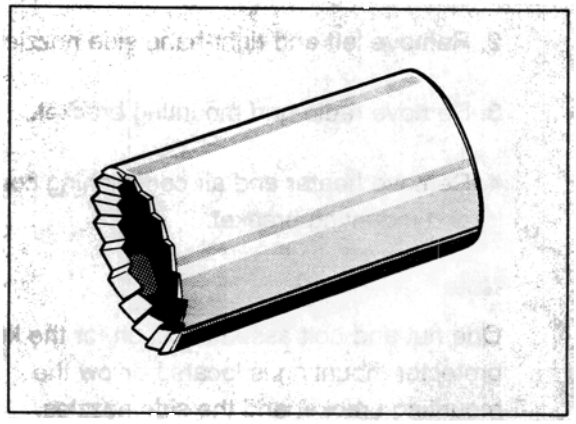

281-68

4. Working from the driver's side, undo both shear nuts with Special Tool 9259 and take out triggering unit.

Note

The mounting locations on the body panel must be cleaned down to bare metal.

Use 1/4 in. hex socket wrench to tighten the shear nuts.

68 68 19 Removing and installing passenger airbag unit

1. Disconnect battery and cover terminal or battery.

2. Remove left and right-hand side nozzles.

3. Remove radio and mounting bracket.

4. Remove heater and air conditioning control and mounting bracket.

Note

One nut and bolt assembly each for the knee protector mounting is located below the mounting bracket and the side nozzles.

5. Remove ashtray.

6. Remove knee protector. Disconnect plug-in connector of airbag unit.

7. Release lower airbag flap (3 screws). Release upper airbag cap (4 screws). After releasing the 4 screws, press flap forward and pull out from below (the flap engages into a stay).

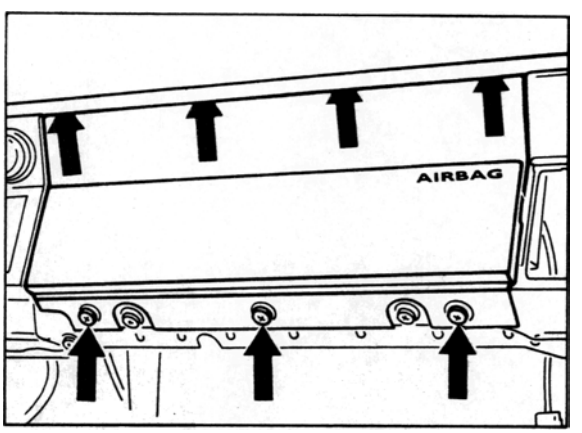

1719-68

Note

The hex socket head bolts are micro-sealed. Use new screws when refitting the assembly. **Tightening torque: 6 Nm** (4 ftlb.)

8. Release airbag unit and pull out from below.

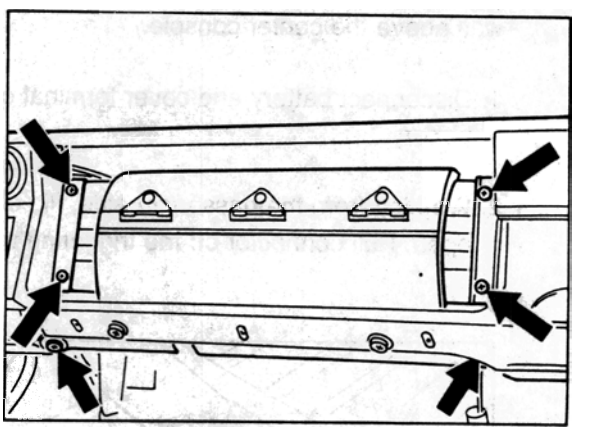

1720-68

When stowing away the airbag unit, make sure the airbag opening faces up.

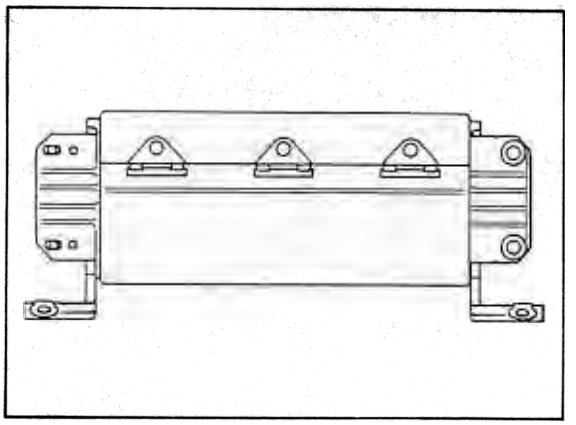

1722-68

The airbag unit must be stored in a safe place when it remains removed for longer periods. Observe safety precautions.

68 Checking operational readiness of airbag system

1. **Functional check of airbag warning lamp**. Switch on ignition. The airbag script must come on for approx. 3 seconds. If the warning lamp does not come on, check bulb and/or voltage supply.

2. **Functional check of fault memory**. Pull off fuse for voltage supply to clock (fuse No. 18) for approx. 30 seconds with the ignition switched on. The airbag warning lamp must now display a fault. Read out fault and check if fault code 19 (Airbag warning light: Open circuit, fault not present) is displayed.

3. Erase fault memory.

4. Check if no trim parts, decals or other items are attached on the steering wheel and in the area of the passenger airbag.

5. Check components visually for damage and any changes.

6. All checks of the system must be recorded in the stamp areas provided for this purpose in the Warranty and Maintenance brochure.

68 47 19 Removing and installing Cabriolet draft stop



1900-68

68 47 19 Removing and installing Cabriolet draft stop

Removing Cabriolet draft stop

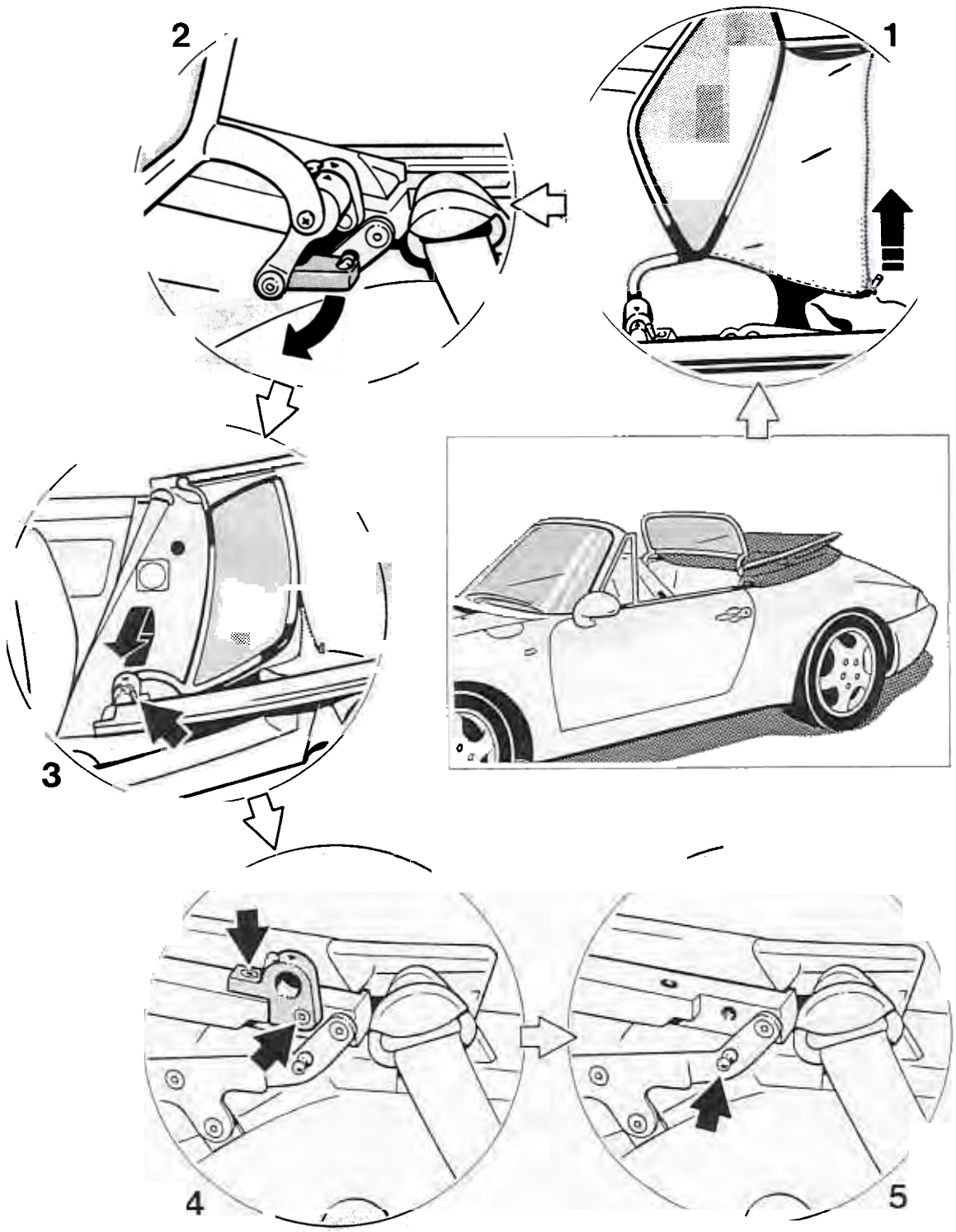

68 47 19 Removing and installing Cabriolet draft stop

Removing Cabriolet draft stop

Open convertible top.

No.	Operation	Instructions
1	Open zip fastener	Open and disconnect zip fastener of draft stop.
2	Unlatch drag lever	Unlatch the drag lever from the ball joint mounted on the link.
3	Remove draft stop	Swing the draft stop until the red marks on the draft stop and the left mount are opposite each other. Press the red button and press the draft stop out of the left mount. Lift the draft stop slightly at the left and pull it out of the right mount.
4	Remove mounts	Remove the fastening screws of the mounts from the roof frame.
5	Remove ball joint	Unscrew the ball from the link.

68 47 19 Removing and installing Cabriolet draft stop

Installing Cabriolet draft stop

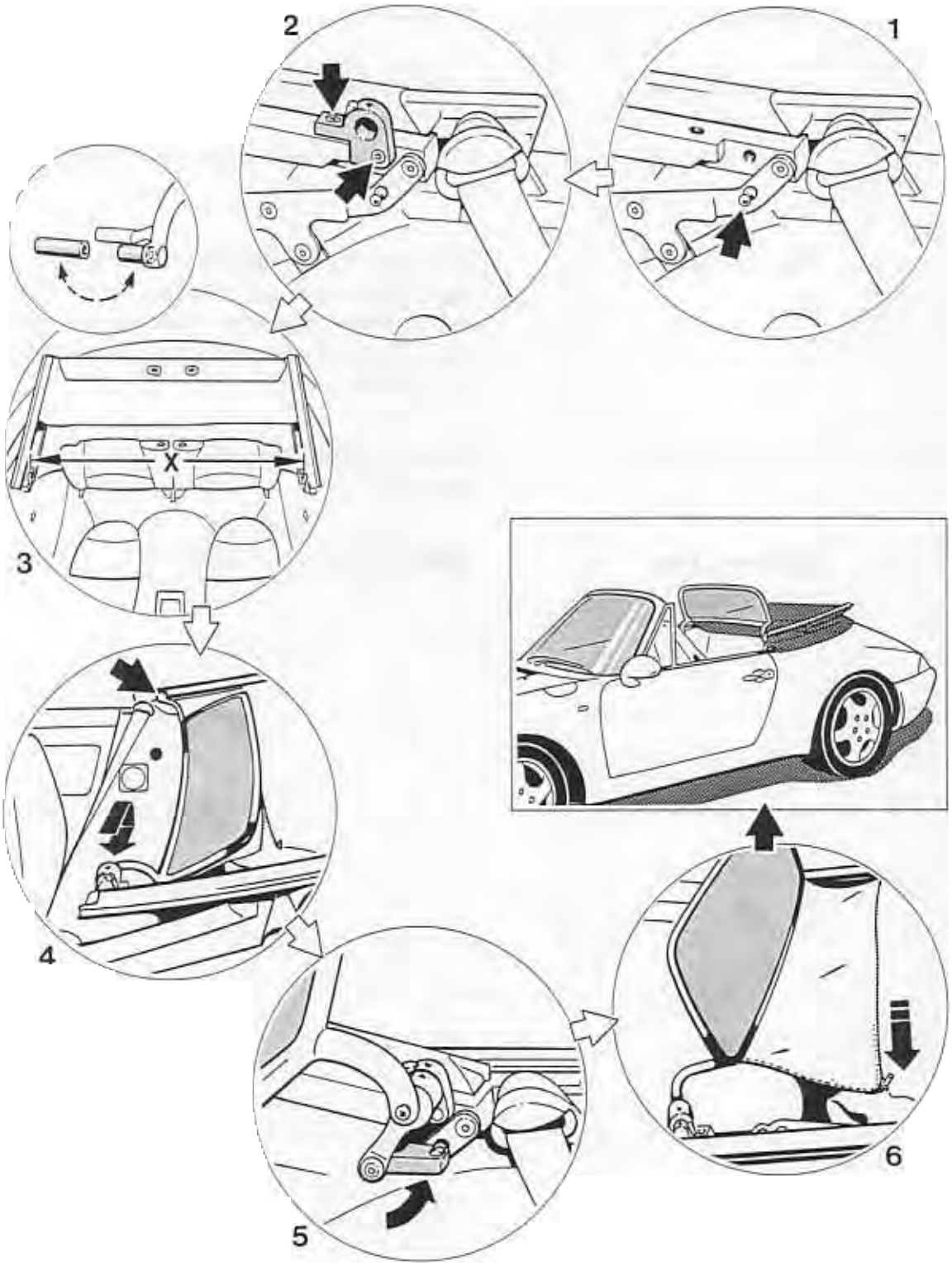

68 47 19 Removing and installing Cabriolet draft stop

Installing Cabriolet draft stop

No.	Operation	Instructions
1	Install ball joint	Screw the ball to the link. Tightening torque: 5.6 Nm (4 ftlb.)
2	Install mounts	Position the mounts on the roof frame and screw them to the roof frame using the M 6 x 16 bolts. Tightening torque: 9.7 Nm (7 ftlb.).
3	Replace bushing	If the dimension X between the installation points of the mounts is up to 1002 mm, the short bushing must be screwed to the right side of the draft stop with a Torx screw. If dimension X is above 1002 mm, the long bushing must be installed. Tightening torque: 15 Nm (11 ftlb.).
4	Position draft stop	Insert draft stop first into the right mount then into the left mount. Swing the draft stop until the red marks on the draft stop and the left mount are opposite each other. Snap the draft stop into the left mount; a click must be heard.
5	Latch in drag lever	Swing the draft stop forwards and latch the drag lever into the ball joint mounted on the link.
6	Close zip fastener	Insert the part of the zip fastener installed on the draft stop into the half of a zip fastener on the roof liner and close the zip fastener.

68 27 13 Bonding interior rearview mirror in place

For vehicles with new mirror generation

The following materials are required to bond the complete interior rearview mirror into place:

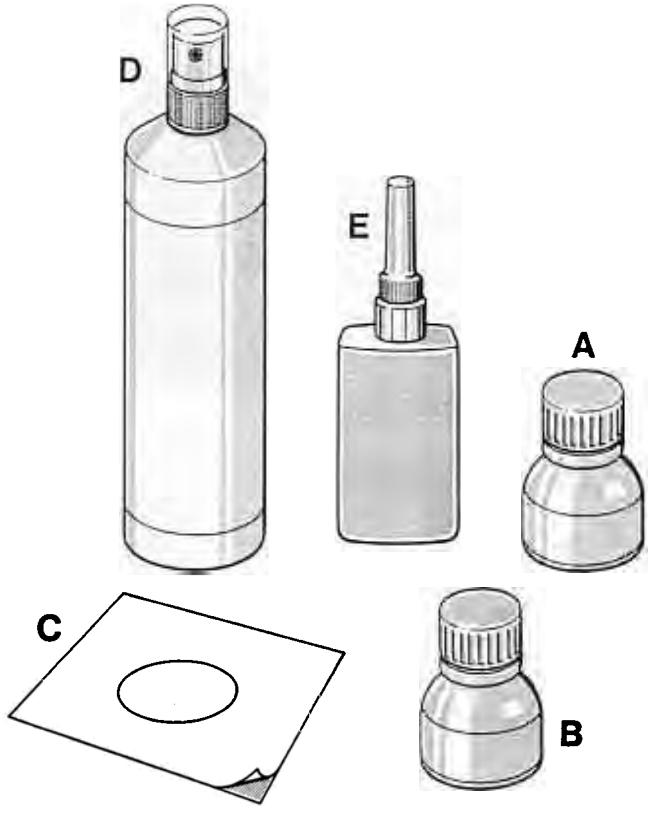

1981-68

A = **Cleaning solution** (000.043.157.00)*

B = **Primer** (000.043.158.00)*

C = **Cover sheet** (000.043.177.01)*

D = **Activator** (000.043.052.00)*

E = **Adhesive** (000.043.051.00)*

* Porsche Part No.

68 27 13 Bonding interior rearview mirror in place

For vehicles with new mirror generation

Bonding the assembled interior rearview mirror to the windshield

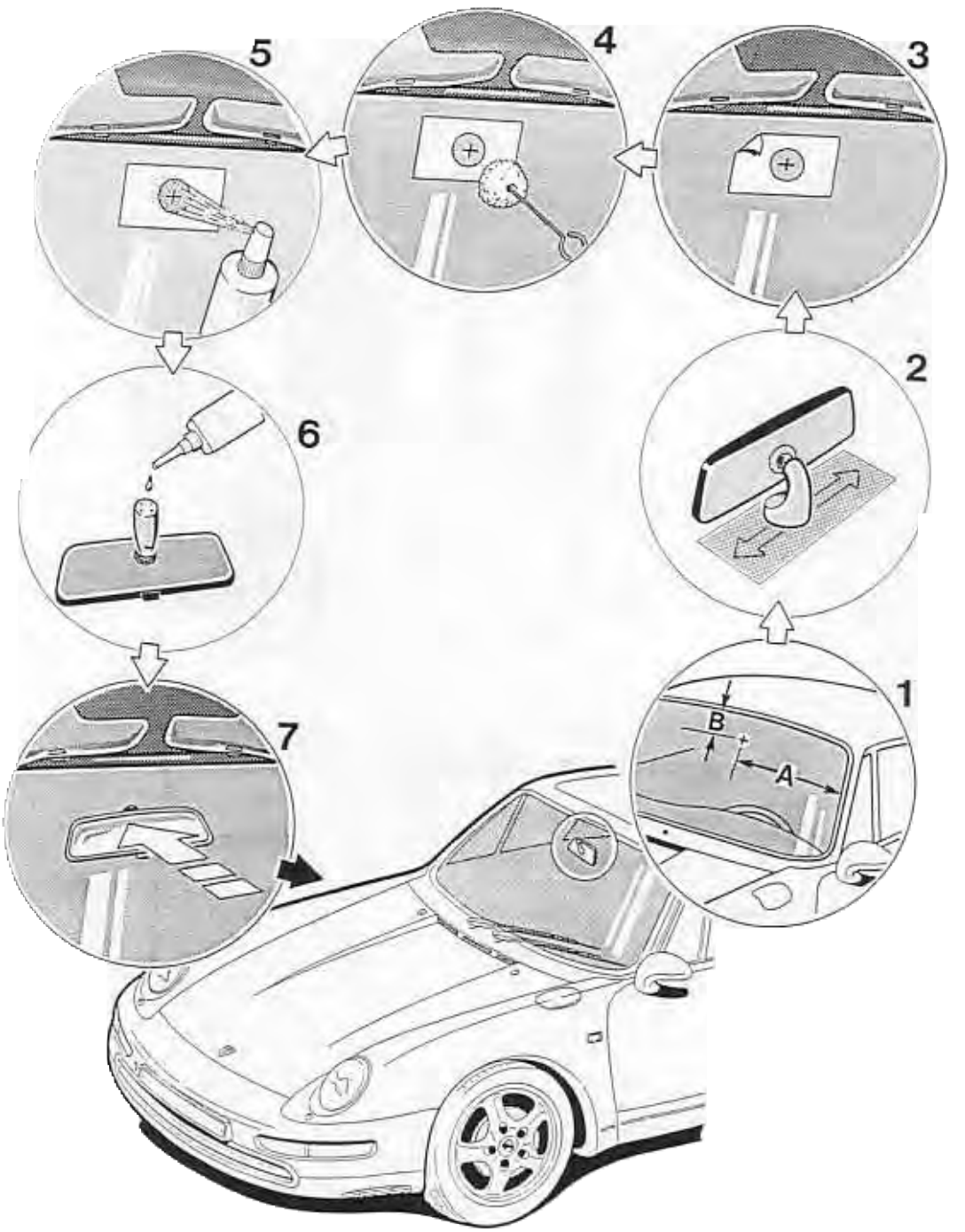

68 27 13 Bonding interior rearview mirror in place

For vehicles with new mirror generation

Bonding the assembled interior rearview mirror to the windshield

No.	Operation	Instructions
1	Mark position of interior rearview mirror.	Mark position of bonding plate on outside of windshield. **Dimension A = 597 mm** **Dimension B = 145 mm**
	Remove adhesive residue.	Using a scraper, mechanically remove adhesive residue from windshield. Using a scraper, mechanically remove adhesive residue from bonding plate of rearview mirror.
2	Sand bonding plate of interior rearview mirror to produce a smooth surface.	Using 100 grit sanding paper, mechanically sand bonding plate of interior rearview mirror.
	Clean bonding plate of interior rearview mirror.	Clean bonding plate of interior rearview mirror using **cleaning solution** (A).
	Clean bonding area of windshield.	Clean bonding area on windshield with **cleaning solution** (A).
3	Mask off bonding area of windshield.	Mask off bonding area of windshield with **primer template** (masking sheet C). The mark indicating the position of the interior rearview mirror must be visible in the center of the primer template.
4	Apply primer to bonding area of windshield.	Apply a thin, even coat of **primer** (B) to masked bonding area of windshield. **Caution: Allow to flash off for 15 to 20 minutes!**

No.	Operation	Instructions
5	Activate bonding area on windshield.	Spray bonding area of windshield with **activator** (D). **Caution: Allow to flash off for 2 minutes!**
	Remove primer template.	
6	Apply adhesive to bonding plate of mirror.	Apply a drop of **adhesive** (E) to bonding plate of interior rearview mirror.
7	Bond interior rearview mirror in place.	Press interior rearview mirror with bonding plate onto primered and activated area on windshield. **Note: Press in place for approx. 40 – 50 seconds!**
		Note: **Bonding strength** **60 % after 1 hour** **100 % after 24 hours**

68 27 19 Removing and installing inside rear view mirror

The following special tool is required for removing and installing the inside rear view mirror:

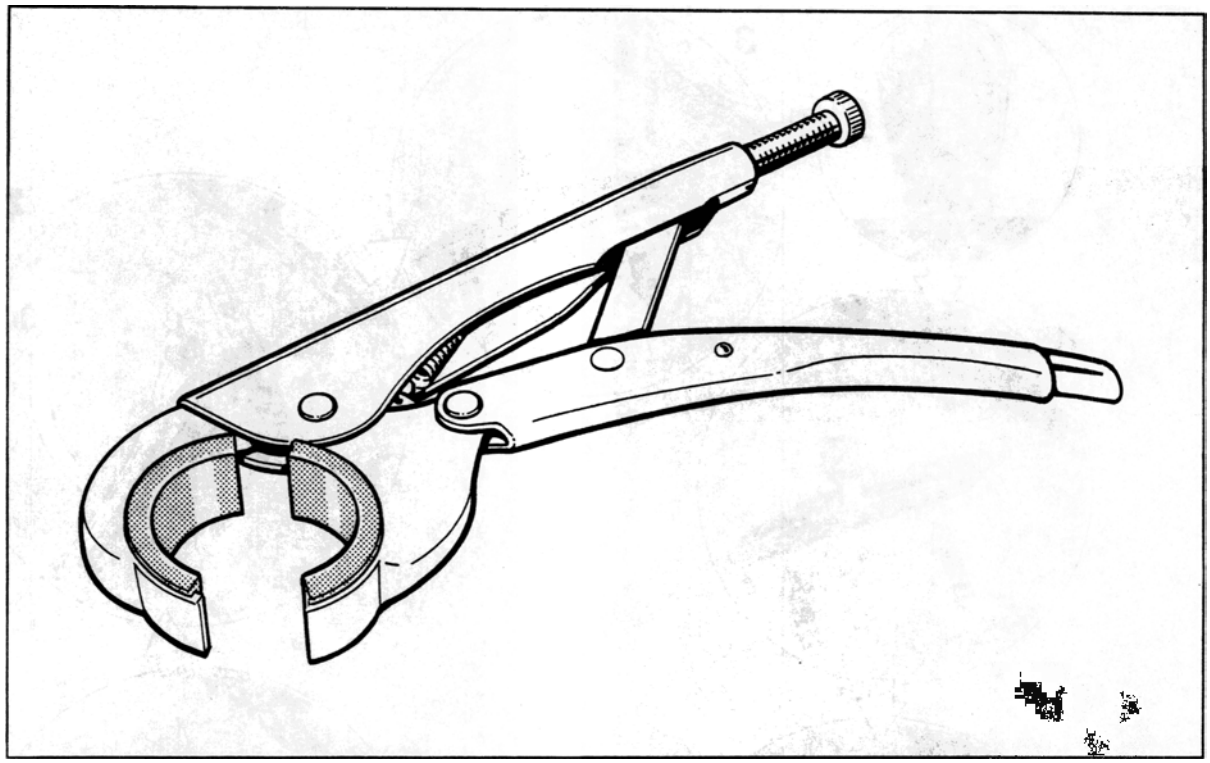

2056 - 68

A = pliers (special tool 9578)

Removing and installing inside rear view mirror

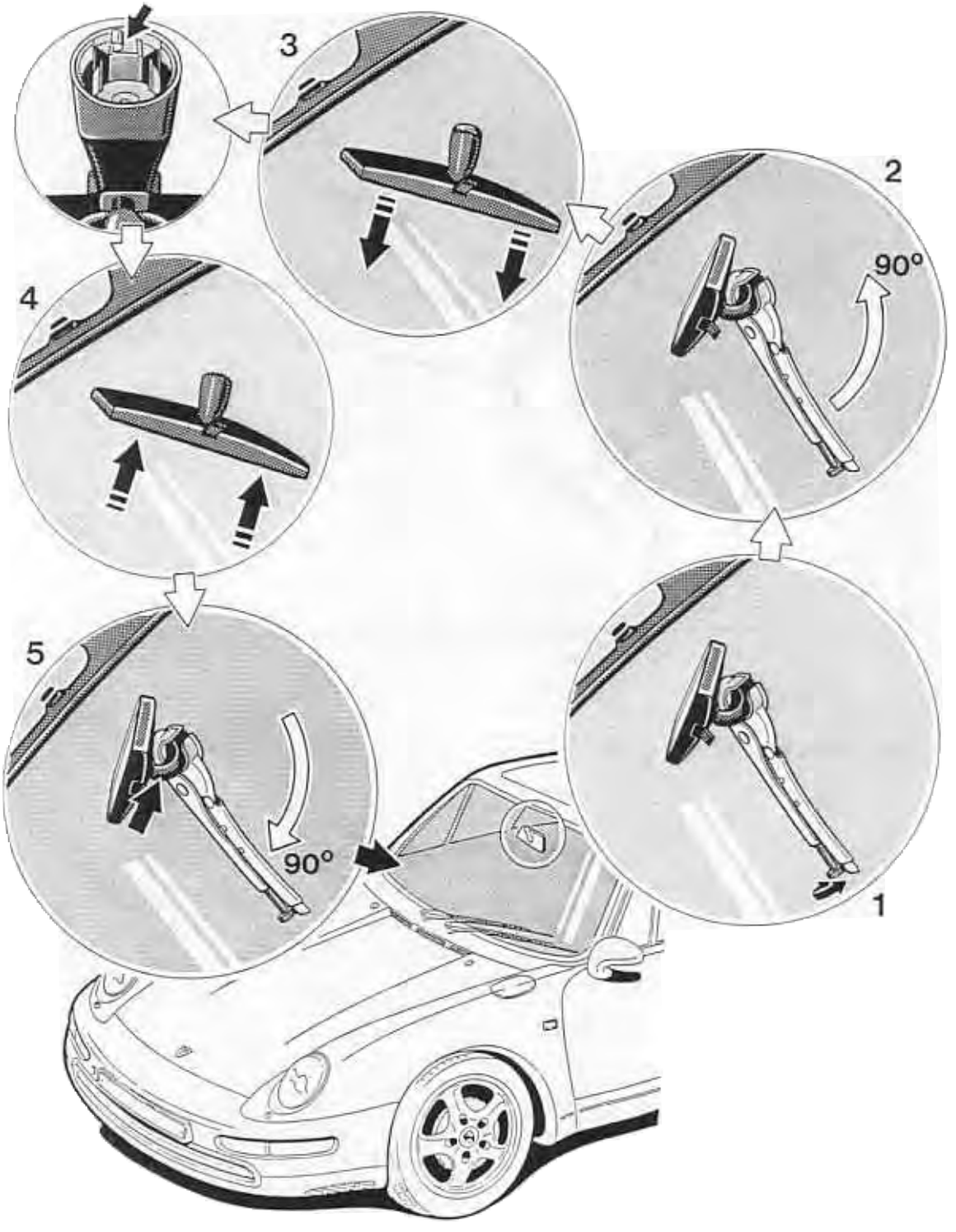

Removing and installing inside rear view mirror

Removing inside rear view mirror

No.	Operation	Instructions
1	Fix pliers in position	Set pliers to diameter of mirror foot and attach pliers to foot of mirror with projecting plastic parts facing windshield.
2	Loosen mirror	Turn foot of inside rear view mirror 90° using pliers (**special tool 9578**). Remove pliers from foot of mirror.
3	Remove mirror	Unclip foot of inside rear view mirror from retaining plate on windshield. **After removal of the inside rear view mirror from its foot, the small aluminium chip in the locking area must be removed as otherwise it might not be possible to seat the mirror securely when it is fitted. If fitting for the second or third time, check the locking area of the mirror foot for wear and replace the mirror if necessary.**

Installing inside rear view mirror

No.	Operation	Instructions
4	Insert mirror	Clip foot of inside rear view mirror, turned 90°, into retaining plate on windshield.
5	Fix mirror in position	Attach pliers **(special tool 9578)** to foot of mirror with projecting plastic parts facing windshield. Turn the foot of the mirror 90° using the pliers. **The mirror must not be turned beyond the locking point.** Remove pliers from foot of mirror.

72 81 19 Removing and installing seat lift units

The following spare parts and special tools are required for removing and installing the seat lift units.

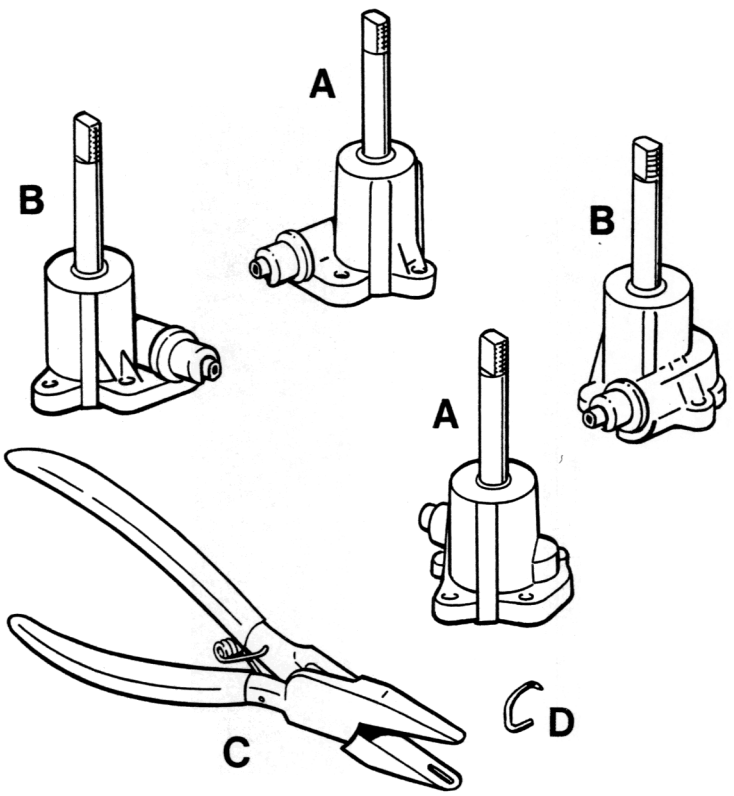

2241 - 72

A = front left and rear right lift unit

B = front right and rear left lift unit

C = upholstery clip pliers

D = upholstery clip

Removing seat and lift units

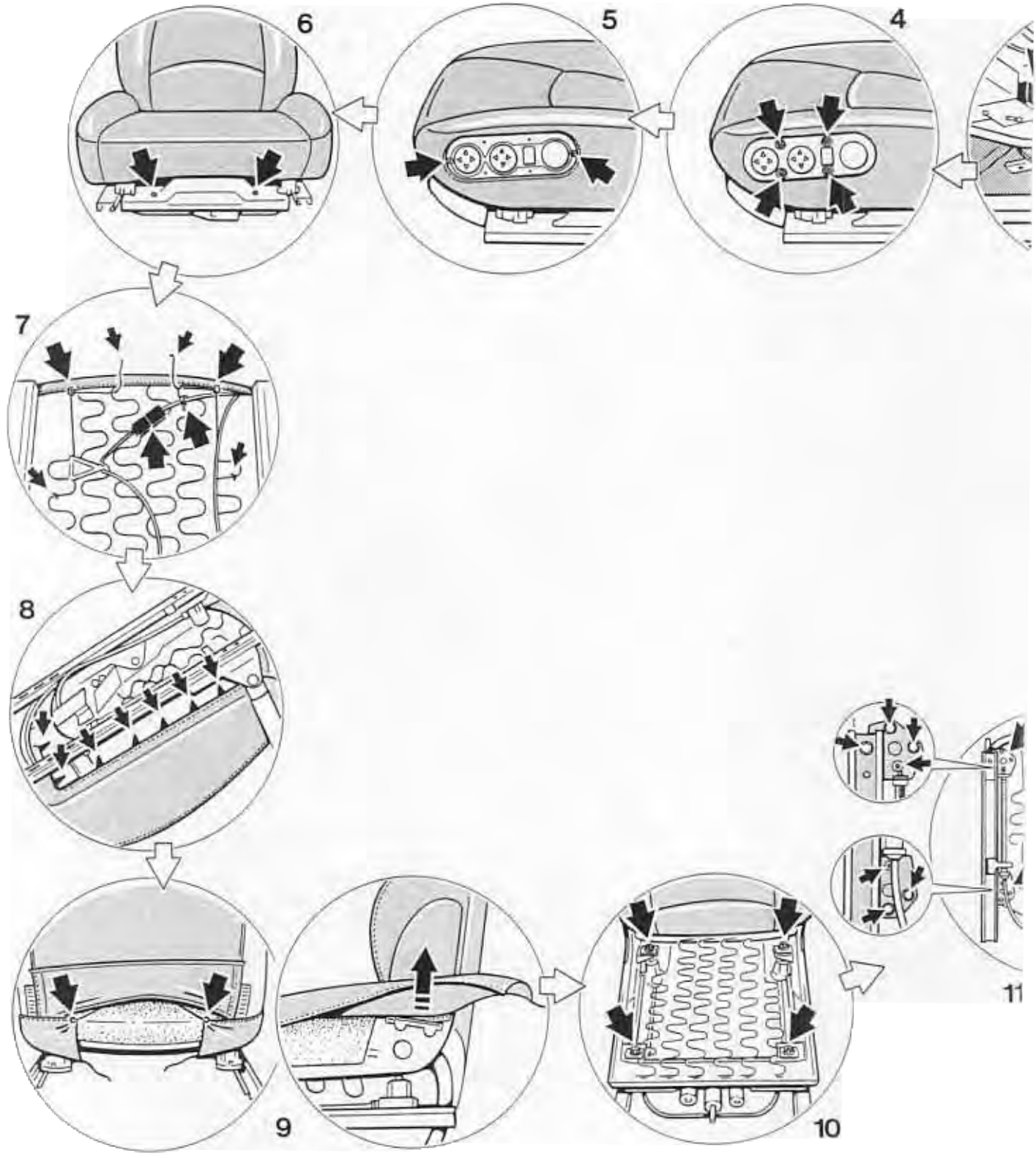

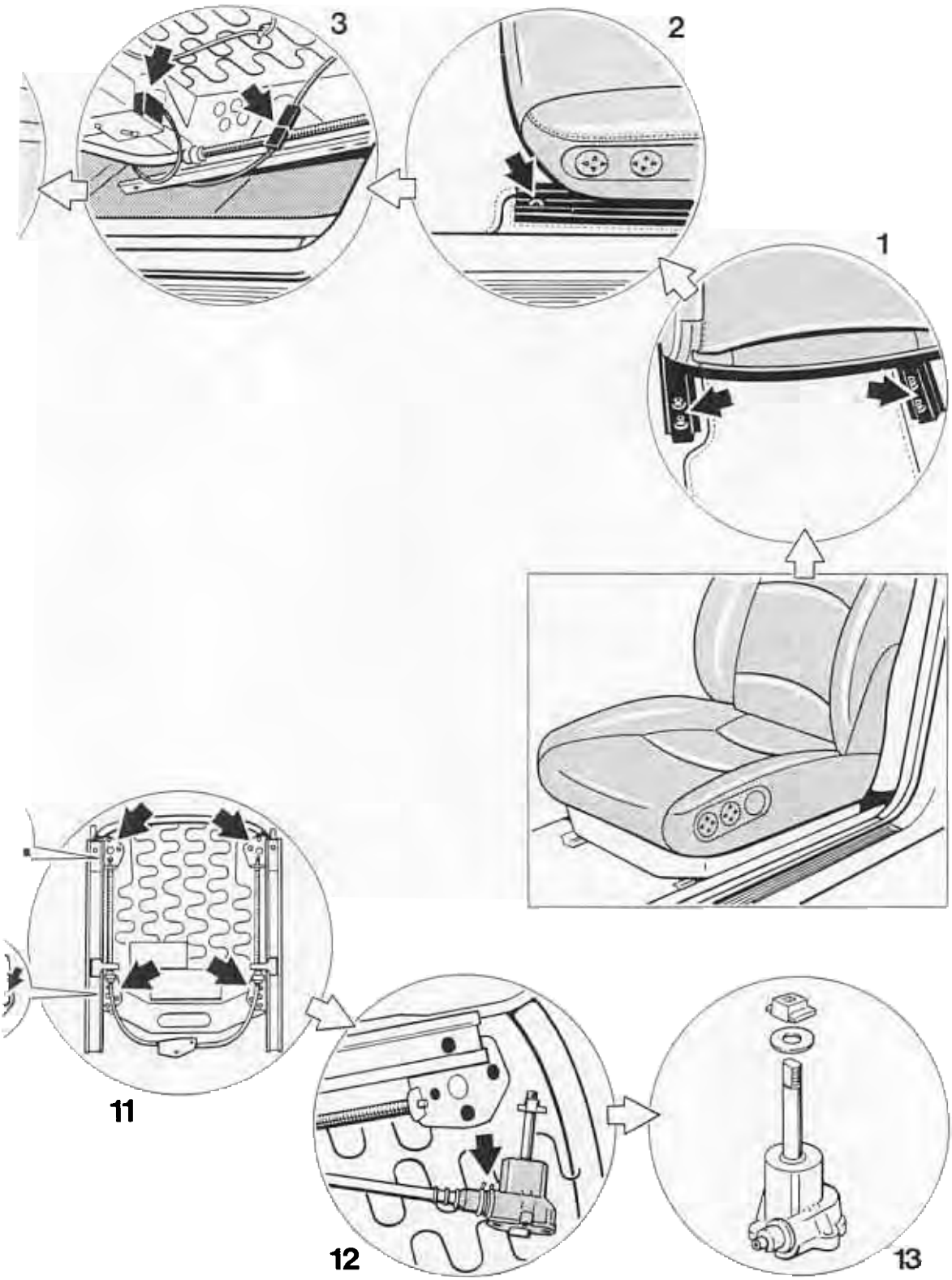
3
2
1
11
12
13

Removing seat and lift units

No.	Operation	Instructions
	Remove rear mounting screws.	Move the seat forward up to the stop and unscrew the rear mounting screws.
2	Remove front mounting screws.	Move the seat back up to the stop and unscrew the front mounting screws.
3	Disconnect wiring.	Lift the seat slightly and unplug the connectors. Remove the seat from the vehicle.
4	Remove switch cover.	Unscrew the mounting screws of the switch cover.
5	Remove switch console.	Unscrew the mounting screws of the switch console.
6	Remove motor cover.	Using a cross-head screwdriver, unscrew the mounting screws of the cover for the motors.
7	Disconnect upholstery clips, tensioner wire, tie wraps and electrical connections.	Cut the upholstery clips and tie wraps open on the underside of the seat using secateurs. Unplug the seat heating connector. Disconnect the tensioner wire from the seat frame.
8	Bend metal lugs open.	Bend open the metal lugs on the seat frame and unhook the seat cover.
9	Disconnect upholstery clips and seat cover.	Cut the upholstery clips between the foam upholstery and the cover open using secateurs. Unclip the cardboard guide on the seat cover from the seat frame and remove the seat cover with the foam part from the seat frame.

No.	Operation	Instructions
10	Disconnect lift units at top.	Unscrew the top mounting nuts of the lift units and take off the guide spring.
11	Disconnect lift units at bottom.	Unscrew the bottom mounting screws of the lift units from the seat rails and remove the lift units between the seat rail and the seat frame.
12	Remove lift unit from drive shafts.	Unclip special spring (retaining spring) between lift unit and drive shaft. Pull lift unit off drive shaft.
13	Remove slides and washers.	Remove the slides and washers from the spindles of the lift units.

Removing seat and lift units

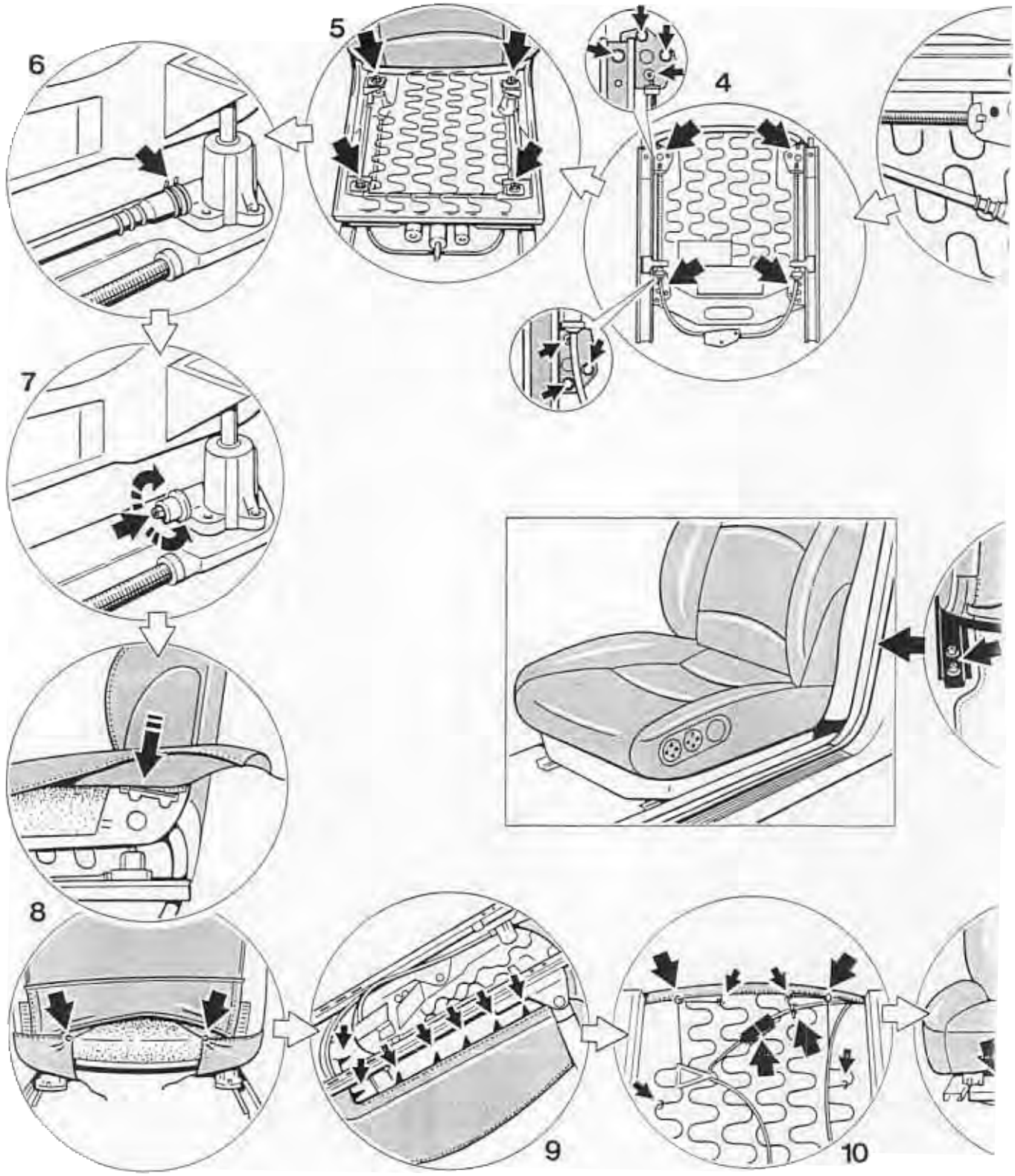

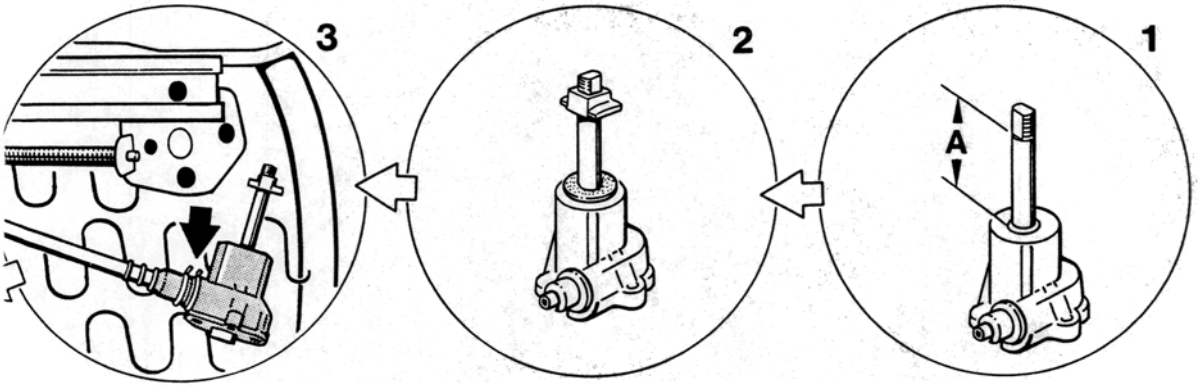
3
2
1
A

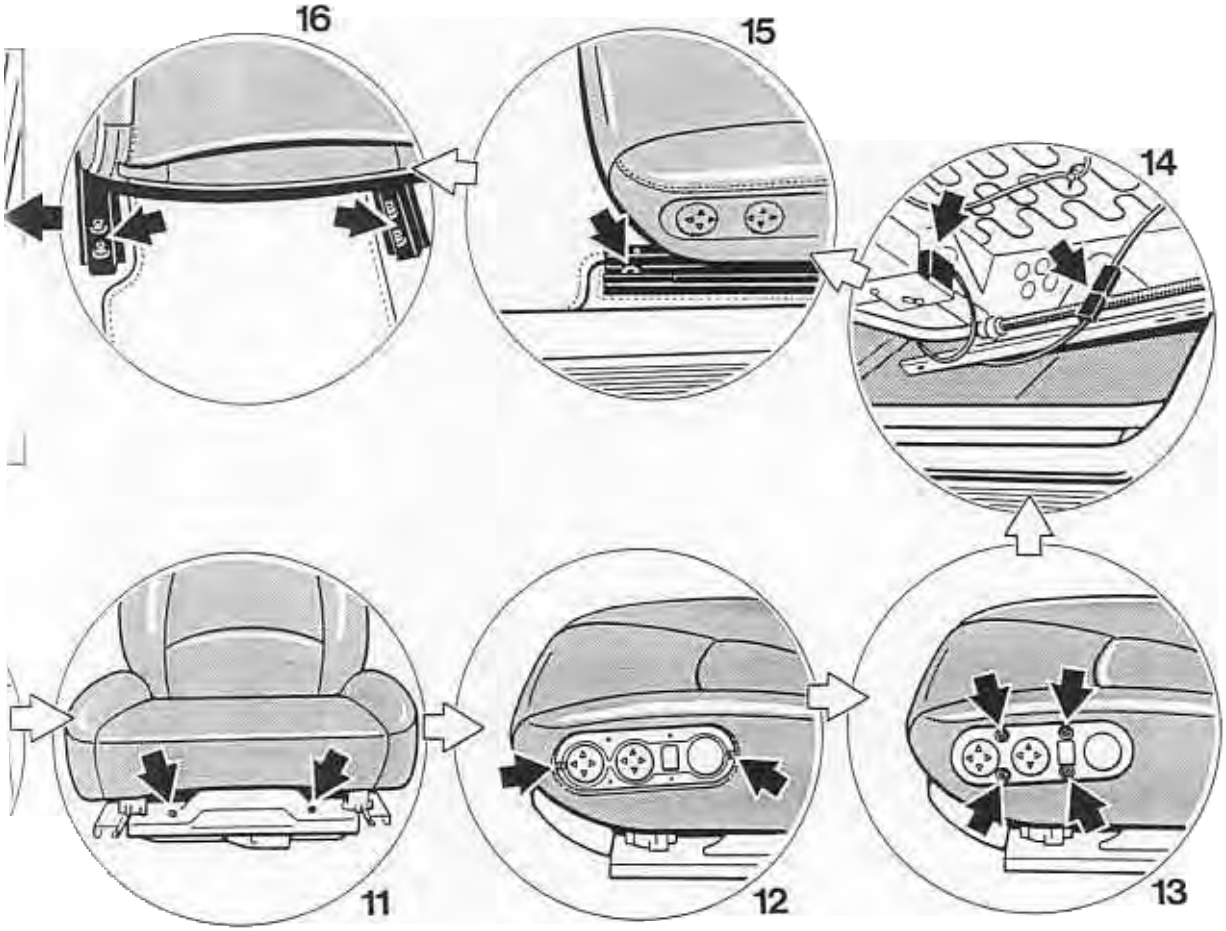
16
15
14
11
12
13

74 28 01 Checking seat heater

1. Remove switch cover (4 screws).

2. Disengage seat heater switch and pull out switch (take care not to damage the wire).

3. Switch on ignition.

4. Connect voltmeter to term. 1 (positive) and term. 2 (negative).

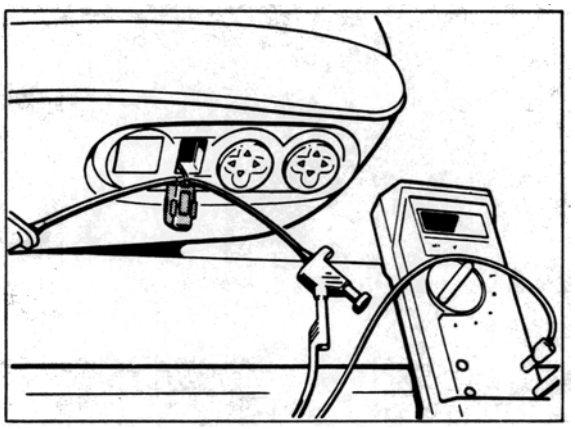

1343 - 72

Display: approx. 5 V

Note

If no voltage is displayed, check power supply according to wiring diagram.

5. Connect voltmeter to term. 2 (negative) and term. 3 (positive).
   Display (depending on potentiometer setting): approx. 2 - 3 V

6. Push button into "on" position and keep it in this position.
   Display: approx. 5 V

7. Push button into "off" position and keep it in this position.
   Display: approx. 0 V

8. Turn knurled wheel of potentiometer all the way up.
   Display: approx. 3 V

9. Turn knurled wheel of potentiometer all the way down. The voltage must then drop to approx. 2 V.

10. Remove seat and connect to Special Tool 9269.

11. Switch on seat heater and set to maximum heating output.

12. Measure voltage at 2-pin connector marked with digit 3.

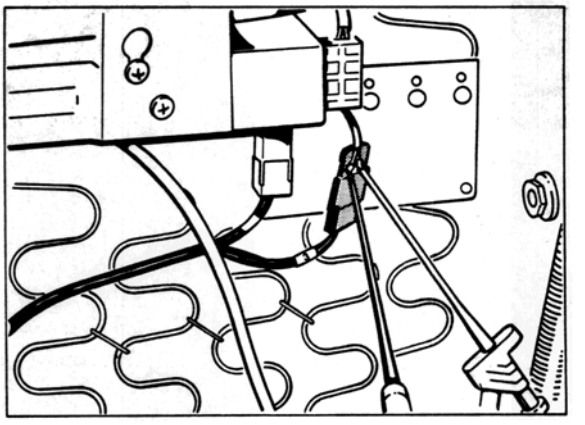

1344 - 72

When the seat heater is switched on, the voltage oscillates between 0 V and approx. 12 V (clocked voltage).

Checking resistance of heater elements

Note

Use a digital ohmmeter for the measurements.

1. Disconnect connector marked with digit 3.

2. Zero out ohmmeter.

3. Connect ohmmeter on pin side.
   Display at 20° C ambient temperature:
   1.5 - 1.8 Ω

74 27 15 Calibrating controllable seat heater

Control unit

Note

The seat heater must be calibrated after the control unit or the heating elements have been replaced.

Installation position

At the bottom of the seat

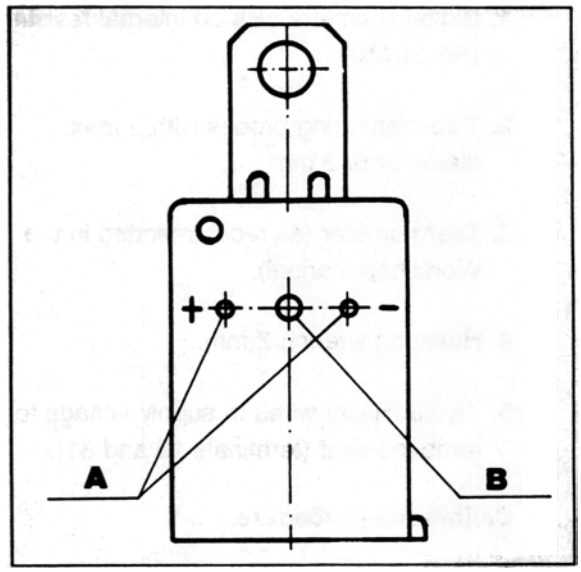

Control unit for seat heater 165 - 72

A - Measuring points (V)
B - Calibration potentiometer

Tools

1. Digital voltmeter with an internal resistance (Ri) ≥1 MΩ.
2. Two measuring probes with a max. diameter of 2 mm.
3. Thermometer (as recommended in the Workshop Manual).
4. Hexagon wrench 2 mm.
5. Two auxiliary wires to supply voltage to the removed seat (terminals 15 and 31).

Calibration procedure

1. Store the seat to be calibrated in the working area until it has assumed the ambient temperature.
2. Provide power supply.

Note

Do not switch on the seat heater. If switched on unintentionally, the seat must cool down until the heating elements have again adopted the ambient tmeperature.

3. Measure ambient temperature and refer to the table for the relevant voltage value.
4. Connect voltmeter to control unit (A).
5. Set the voltage value on the calibration potentiometer (B) so that it corresponds to the value appropriate for the ambient temperature.

Table

Ambient temperature in°C	Voltage in V
0	1.50
2	1.55
4	1.60
6	1.65
8	1.70
10	1.75
12	1.80
14	1.85
16	1.90
18	1.95
20	2.00
22	2.05
24	2.10
26	2.15
28	2.20
30	2.25
32	2.30
34	2.35
36	2.40
38	2.45
40	2.50
42	2.55
44	2.60
46	2.65
48	2.70

Functional check

Switch on seat heater for approx. 10 sec. with maximum heating power. After switching off, measure the voltage at the control unit. The measurement must now be considerably higher.

Installing lift units and seat

No.	Operation	Instructions
1	Adjusting lift units	The spindles of the lift units must be adjusted so that **dimension A** measured from the head of the unit to the grooves in the spindles is **40 mm**.
2	Position washers and slides.	Push the washers and slides onto the spindles of the lift units.
3	Attach lift units to drive shafts.	Push the lift units onto the drive shafts and clip the special springs (retaining springs) into position between the lift units and drive shafts.
4	Attach lift units to bottom mounts.	Push the lift units in between the seat rails and the seat frame. Attach the lift units to the seat rails using the M 6 x 16 hexagonal head self-locking bolts. **Tightening torque: 12 Nm (9 ftlb).** Attach the lift units to the seat rails using the M 6 x 16 pan head screws **– and bond them using Loctite 270 –. Tightening torque: 8 Nm (6 ftlb).** **Caution:** At the front, the motor mount must be screwed into place with the same screws.
5	Attach lift units to top mounts.	Place the guide springs on the slides of the spindles. **Bond the mounting nuts with Loctite 270** and screw them onto the spindles of the lift units. **Tightening torque: 11 Nm (8 ftlb).**
6	Test functions of lifting units.	To test the functions of the lift units, install the seat in the vehicle without upholstery or cover. If the lift units stop at different levels at bottom right and left, unclip the special spring (retaining spring) and remove the drive shaft.

No.	Operation	Instructions
7	Adjust lift units.	Set the lift unit which lags behind to stop at the same position as the other unit using a rectangular wrench or screwdriver. Push the drive shaft back into position and clip the retaining spring on. Remove the seat from the vehicle again.
8	**Install foam upholstery with cover.**	Place the cover with foam section in the seat frame. Hook the cardboard guide back into the seat frame. Fasten the cover to the foam section at the back using upholstery clips.
9	Hook in seat cover.	Hook the seat cover to the metal lugs at the bottom of the seat frame and bend the lugs inwards.
10	Attach cover, upholstery and wiring.	Attach the seat cover and the foam section to the seat frame using upholstery clips. Tension the tension wire and attach it to the seat frame. Plug in the electrical connector and attach the cable to the seat frame using tie wraps.
11	Install motor cover.	Attach the motor cover to the seat frame using sheet metal screws and washers.
12	Install switch console.	Push the seat cover under the switch console and attach the switch console to the seat frame using countersunk sheet metal screws.
13	Install switch cover.	Fit switch cover to switch console and fix it in place with sheet metal screws and washers.
14	Plug in connectors.	Place the seat in the vehicle, lift it slightly and plug in the electrical connector.
15	Position seat on seat rail mount at the front.	Place the seat on the seat rail mount at the front and align the bolt holes at the front correctly. Position the bolts and washers at the front.

No.	Operation	Instructions
16	Position seat on seat rail mount at the rear. Screw seat into place at front and rear.	Move the seat up to the stop at the front and alighn the bolt holes correctly at the rear. Position the rear bolts with washers and tighten them. Move the seat to the back and tighten the mounting screws at the front. **Tightening torque at front and rear: 23 Nm (17 ftlb)**

Repair Manual

911 Carrera
(993)

Volume VI:
Air conditioning
Vehicle electrics

Dr. Ing. h.c. F. Porsche Aktiengesellschaft

Volume I: General Engine	**Overall vehicle – General** Maintenance, diagnosis	**0** 03
	Engine Engine – Crankcase, mounting Engine – Crankshaft, pistons Engine – Cylinder head, valve drive Engine – Lubrication Engine – Cooling	**1** 10 13 15 17 19
	Fuel, exhaust system, engine electrical system Fuel supply, control Exhaust system – Turbocharging Fuel system, electronic injection Fuel system, K-Jetronic Exhaust system Starter, power supply, GRA Ignition system	**2** 20 21 24 25 26 27 28
Volume II: Transmission Manual transmission	**Transmission** Clutch, control Manual transmission – Controls, case Manual transmission – Gears, shafts, inner operation Final drive, differential, differential lock	**3** 30 34 35 39
Volume III: Transmission Automatic transmission	**Transmission** Automatic transmission – Torque converter Automatic transmission – Controls, case Automatic transmission – Gears, control Final drive, differential, differential lock	**3** 32 37 38 39
Volume IV: Chassis	**Chassis** Front wheel suspension, drive shaft Rear wheel suspension, drive shaft Wheels, tires, alignment Anti-Lock System (ABS) Brakes – Mechanical Brakes – Hydraulics, regulator, booster Steering	**4** 40 42 44 45 46 47 48

Volume V:	**Body**	**5**
Body	Body front section	50
	Body center section, roof, frame	51
	Body rear section	53
	Hoods, lids	55
	Front doors, Central Locking System	57
	Exterior body equipment	**6**
	Sunroof	60
	Soft top, hardtop	61
	Bumpers	63
	Glasses, window control	64
	Exterior equipment	66
	Interior equipment, passenger protection	68
	Interior body equipment	**7**
	Trim, insulation	70
	Seat frames	72
	Seat upholstery, covers	74

Volume VI:	**Air conditioning**	**8**
Air conditioning	Heater	80
Vehicle electrics	Ventilation	85
	Air conditioning	87
	Auxiliary air conditioning system	88
	Electrical system	**9**
	Instruments, alarm	90
	Radio, telephone, on-board computer	91
	Windshield wipers and washer	92
	Exterior lights, lamps, switches	94
	Interior lights, lamps, switches	96

Volume VII:	**Electrical system**	**9**
Wiring diagrams	Wiring	97

Volume VIII:	**Diagnosis**	**D**
Diagnosis	Self-diagnosis	03
	DME Diagnosis	24
	Tiptronic Diagnosis	37
	PDAS Diagnosis	39
	ABS Diagnosis	45
	Airbag Diagnosis	68
	Heater Diagnosis	80
	Alarm Diagnosis	90

Preface

Structure

The "Technical Literture" for the "911 Carrera (993)" model is basically structured as before, i.e. the structure follows the familiar repair groups.

A new feature is that the structure includes the main groups **0 to 9** and the main group **D**.

Main groups:	0	Complete vehicle – General
	1	Engine
	2	Fuel, exhaust, engine electrical system
	3	Transmission
	4	Chassis
	5	Body
	6	Body equipment, outside
	7	Body equipment, interior
	8	Air conditioning
	9	Electrical system
	D	Diagnosis

Layout

The layout in the below items remains unchanged throughout the repair manual

1. Table of tightening torques
2. Special tools required
3. Exploded views
4. Legends for the exploded views
5. Assembly notes / use of special tools

As a new feature, however, the former item 6 (Repair group diagnosis) is no longer filed in the volume corresponding to the respective repair group. The **Diagnosis test plans / diagnosis procedures** have been combined in a **separate Diagnosis volume** broken down according to the main groups 0 to 9.

Another new feature is that the contents of the "Service Information Technik" are indicated in the Repair Manual. This brochure concentrates on a description of the design and function of components and of the new features introduced for a particular model year.

Service Number

All major repair procedures and repair descriptions are identified by a two- or four-digit **Service Number** completed by two additional digits to identify the work that corresponds to the first six digits of the working position number in the Working Times and Damage Catalog.

Example: 30 37 37 Dismantling and assembling clutch control shaft

Explanation: 30 37 37 50 (full working position number)

Repair group
here: Clutch, control

Component designation
here: Clutch control shaft

Activity
here: Dismantling and assembling

Index
here: Removed

Presentation in the various documents

30 37 37 50	Working position no. from **Working Times and Damage Catalog**, consisting of repair group, component designation, activity and index
30 37 37	Six-digit number in **Repair Manual**, consisting of repair group, component designation and activity
30 37	Service number in **Service Information**, consisting of repair group and component designation

Goal

The introduction of a service number in the "technical literature" is intended to facilitate standardization and positive identification to allow direct cross-referencing among the various documents. This is of particular importance with regard to the use of electronic media.

VI Air conditioning, Vehicle Electrics

The **Repair Manual of the 911 Carrera (993)** also includes the **911 Carrera 4 manual (993 four-wheel drive).** The 911 Carrera (993) is the basic model covered by the repair operations described in this Manual. "911 Carrera (993)" is also indicated in the header of each page.

Descriptions of repair operations that deviate for the 911 Carrera 4 will be included after the respective 911 Carrera section. The repair descriptions of both models are separated by a cover page. All pages included after the cover page (separation sheet) have the "911 Carrera 4" heading. To facilitate distinction, **the page numbering will start with 100.**

Where different or additional repair procedures apply to the 911 Targa (993), these are given following the repair instructions for the 911 Carrera or 911 Carrera 4. The repair instructions for the 911 Targa (993) are separated by a title page. "**911 Targa (993)**" appears at the top of each page after in the title page (divider). In addition, **the page numbering starts with 200.**

8 Air conditioning

8	Technical data / Air conditioner . .	. 8 - 1
80	**Heater**	
80 59 01	Checking ballast resistor of rear blower . .	. 80 - 1
80 18 19	Removing and installing rear heater blower	. 80 - 3
85	**Ventilation**	
85 16 15	Adjusting the flaps of the heater A/C unit	. 85 - 1
85 51 15	Adjusting the temperature mixing valves	. 85 - 2
85 30 19	Removing and installing heater fresh air blower motors	. 85 - 3
87	**Air Conditioning**	
87	Pressure and temperature specifications	. . 87 - 1
87 01 19	Dismantling and assembling heater A/C unit	. . 87 - 3
87 02 19	Removing and installing heating and air conditioning control . .	. . 87 - 9
87 83 19	Removing and installing A/C system pressure switch	. . 87 - 11
87 03	Safety instructions for handling refrigerant R 134 a	. . 87 - 13
87 03 17	Servicing the A/C system	. . 87 - 14
87 55 19	Removing and installing liquid tank	. . 87 - 25

Printed in Germany - 16, 1996

87 50 19	Removing and installing condenser	87 - 27
87 53 19	Removing and installing condenser fan	87 - 29
87 01 19	Removing and installing heater / air conditioning unit	87 - 31
87 34 19	Removing and installing compressor	87 - 35
87 27 19	Removing and installing magnetic clutch	87 - 37
87 70 19	Removing and installing expansion valve	87 - 39

9 Electrics

90 Instruments, Alarm System

90 73	Tuning model '94 remote control units	90 - 1
90 68	Immobilizer from model '95	90 - 7
90 68 19	Removing and installing immobilizer control unit	90 - 9
90 73 37	Disassembling and assembling hand-held transmitter	90 - 11

91 Radio, Telephone, On-Board Computer

91 55 23	Retrofitting a D-Net telephone system	91 - 1
91 20 01	Check list of possible faults on the Porsche Autoradio CR 10	91 - 7
91 60 23	Retrofitting of a CD changer	91 - 11

92 Windshield Wipers and Washer

92 00 19	Removing and installing windshield wiper system	92 - 1
92 00 19	Removing and installing windshield washer system	92 - 5
92 00 19	Removing and installing headlight washer system	92 - 9
92 00 19	Removing and installing rear window wiper	92 - 13
92 15 19	Removing and installing wiper motor (with A/C system)	92 - 17
92 15 19	Removing and installing wiper motor (without A/C system)	92 - 21

94 Lamps, Lights, Exterior Switches

94 15 19	Removing and installing main headlight mountings	94 - 1
94 23 19	Removing and installing gas discharge lamp (Litronic headlights)	94 - 3
94 15 01	Litronic headlight (dipped beam): troubleshooting	94 - 5

Survey of contents of Service Information Technik '95

The Service Information gives a detailed description of the technical features of the new 911 Carrera.

	Rep. Gr.	Page
Engine		
General		1 - 1
Engine cross-sections	10	1 - 4
Full-load curve		1 - 6
Belt pulley	13	1 - 8
Pistons	13	1 - 10
Hydraulic valve lash adjuster	15	1 - 16
Setting the timing	15	1 - 18
USA - auxiliary air pump		1 - 19
Fuel and ignition systems		
General		2 - 1
DME - Schematic	24	2 - 2
Fuel - air flow	24	2 - 3
Exhaust gas flow	26	2 - 5
DME control unit 2.10.1	24	2 - 9
Mass air flow sensor	24	2 - 12
Throttle potentiometer	24	2 - 18
Ignition system	28	2 - 24
Plausibility test		2 - 28
Diagnosis		2 - 29
Auxiliary air pump	26	2 - 33
Power transmission		
Transmission	30	3 - 1
Clutch	30	3 - 2
Manual transmission	34	3 - 3
Transmission ratios		3 - 6
Gear set	35	3 - 8
Synchromesh	35	3 - 9
Final drive	39	3 - 13
Oil supply		3 - 15
Porsche Tiptronic	37	3 - 16
Modifications for the '95 model year		3 - 17

	Rep. Gr.	Page
Running gear		
General		4 - 1
Front axle	40	4 - 2
Steering	48	4 - 7
Rear axle	42	4 - 8
Elasto-kinematic toe correction	42	4 - 12
Coil springs (layout)	42	4 - 13
Wheels, tires	44	4 - 15
Suspension alignment	44	4 - 17
Brakes	47	4 - 20
Bleeding the brakes	47	4 - 23
ABS 5	45	4 - 24
Operation of the ABD	45	4 - 30
Diagnosis ABS/ABD	45	4 - 34
Body		
General		5 - 1
Constructional dimensions	50	5 - 4
Aerodynamics and air ducting	50	5 - 8
Body equipment		
Body equipment		6 - 1
Color scheme as of 1995 model year	60	6 - 1
Windows	64	6 - 8
Airbag system	68	6 - 14
Body - interior trim		
Body - interior trim	70	7 - 1
Seats	72	7 - 5
Heating, air conditioning, ventilation		
Particle filter	85	8 - 1
Air ducting	80	8 - 3
Heating - air conditioning unit	85	8 - 5
Heating - air conditioning unit	87	8 - 6
Series resistor of rear blower	80	8 - 9

	Rep. Gr.	Page
Electrical system		
Instruments	90	9 - 1
Alarm system/central locking system	90	9 - 3
Heated rear window	64	9 - 6
Central Information System (Z I)	91	9 - 7
Radio "Alpine 7807"	91	9 - 10
Sound package, DSP-System	91	
Windshield wiper and washer system	92	
Headlights	94	
Front end light cluster	94	
Tail lights	94	
Engine compartment baseplate	97	
Wiring diagram		
Summary		
Maintenance		0 - 1
Number ranges		0 - 4
Technical data		0 - 5

8 Technical data of air conditioning system

Compressor model 10 PA 15 C

Refrigerant charge 840 g refrigerant **R 134a**

Refrigerant oil in compressor 140 ± 20 cm^3 ND 8

Tightening torques for refrigerant lines

Thread outer dia.	TPI	Tightening torques in Nm
5/8"	18 UNF	17 ± 3
3/4"	16 UNF	24 ± 4
7/8"	14 UNF	33 ± 4

Hex bolts at	Thread	Tightening torques in Nm
Expansion valve	M 5	6
Expansion valve	M 6	9
Compressor	M 8	28

Note

When fitting the refrigerant lines, apply some refrigerant oil to the bolt unions and the O-rings.

Dispose of the refrigerant oil as **hazardous waste**.

80 59 01 Checking ballast resistor of rear blower

Note

The ballast resistor is fitted with a restart lock-out device. This restart lockout may be by-passed if the 1st stage of the rear blower should fail (2nd stage of rear blower operates continuously).

1. Take out ballast resistor.

2. Press down spring plate with a needle or a similar tool. This causes the contact tongue to snap back into its initial position.

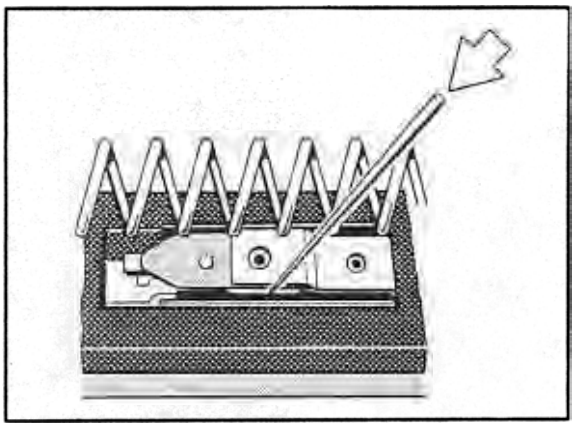

200-80

3. Replace the ballast resistor if the contacts are burnt.

80 18 19 Removing and installing rear heater blower

Removal

1. Remove intercooler. Pull vacuum hose and connector off the switchover valve. Undo fastening screws from fresh air housing and take out fresh air housing.

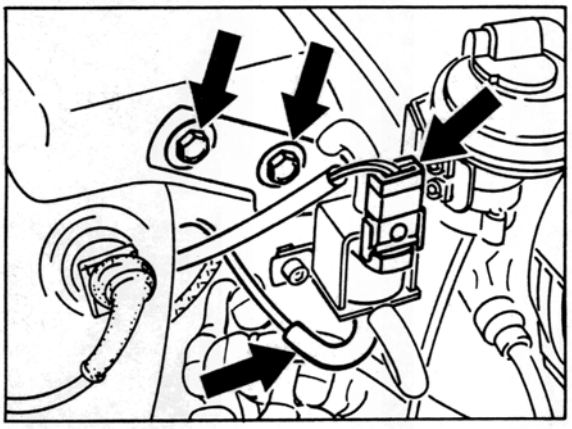

2027-10

2. Remove hose clamps and tie-wraps from heating air elbow and pull off rubber boot. Disconnect connector from rear heater blower and undo fastening screws (2 screws).

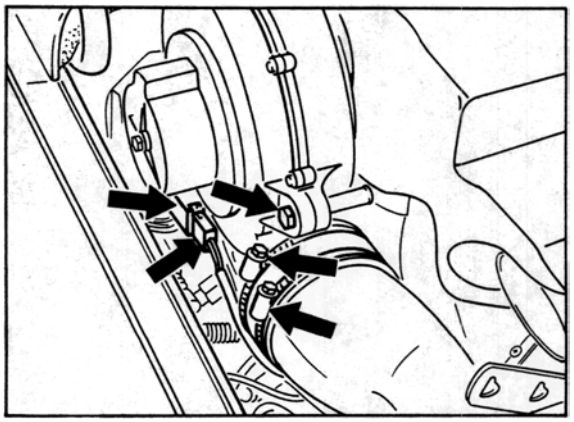

2073-80

3. Pull rear heater blower out of support in rearward direction and take out blower.

Installation

Check for correct seating of hose connections and hose clamps on heater air elbow.

85 16 15 Adjusting the flaps of the heater/ A/C unit

Adjusting the defroster center nozzle flap

1. Set motor to "Defroster closed" end position: Apply a voltage of 12 volts to pin 4 (positive) and pin 5 (negative) using two jumper leads until the motor is positioned in the end position.

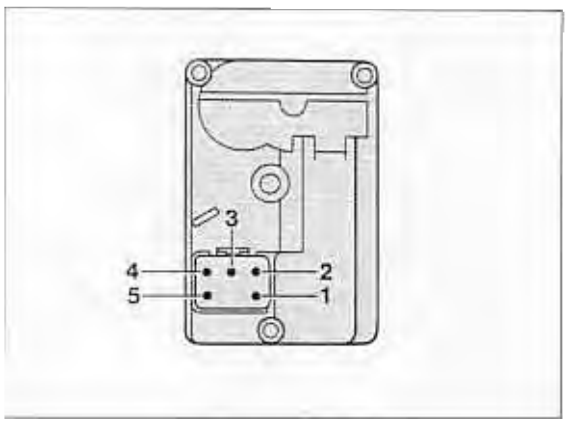

256-87

2. Press defroster center nozzle flap into "Defroster nozzle closed" position (upper outlet closed).

3. Assemble motor drive with flap link and lock assembly.

Adjusting the footwell flaps

1. Set motor to "Footwell flaps closed" end position: apply a voltage of 12 volts to pin 4 (negative) and pin 5 (positive) using two jumper leads until the motor is positioned in the end position. The drive lever now points towards the fresh air inlet.

2. Set both footwell flaps to closed position. Engage linkage with lever and locate with clamp.

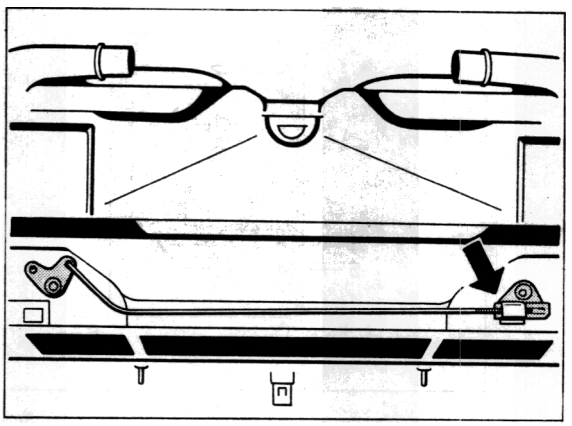

258-87

85 51 15 Adjusting the temperature mixing valves

Note

The temperature mixing vales are located below the instrument panel in the driver and passenger footwells.

1. Set engine to "temperature mixing valves closed" end position: Use two jump leads to apply 12 volts to pin 4 (positive) and pin 5 (negative) until the motor is in the end position.

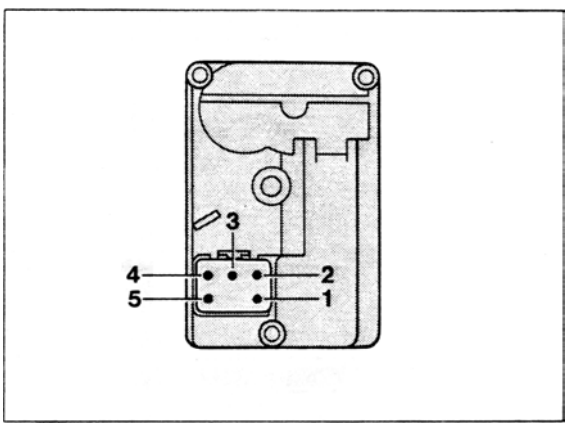

256-87

2. If the temperature mixing valve is not closed, undo the motor mount. Slide the motor in the slots until the temperature mixing valve is set in the closed end position.

85 30 19 Removing and installing heater fresh air blower motors

Tools

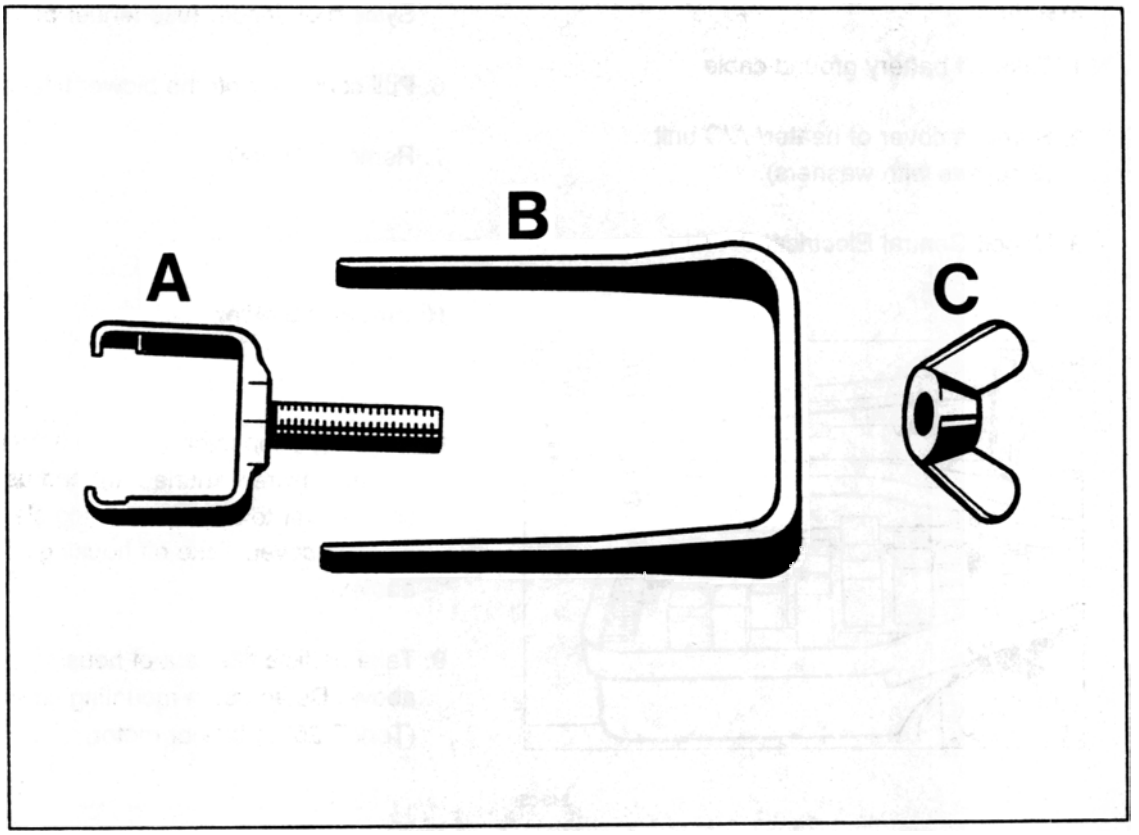

No.	Designation	Special tool	Order number	Explanation
	Puller assembly	9512	000.721.951.20	3 parts

85 30 19 Removing and installing heater fresh air blower motors

Removing and installing heater fresh air blower motors with the heater/ A/C unit installed

1. Take off battery ground cable.

2. Remove cover of heater/ A/C unit (2 screws with washers).

3. Unbolt Central Electrical System.

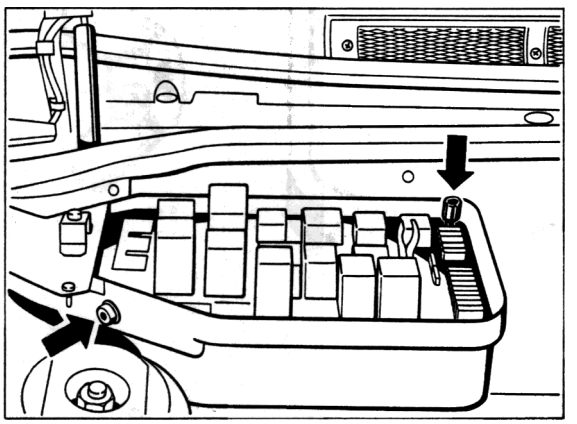

240-85

4. Remove wiring harness cover.



241-85

5. Disconnect electrical connector from blower housing cover and place Central Electrical System on fender (use fender protectors).

6. Pull connector off the blower final stage.

7. Remove firewall.

Right-hand blower

8. Separate connector and wire from housing cover. Unscrew knurled nut and use a screwdriver to detach retaining clamp from housing cover. Take off housing cover from above.

9. Take particle filter out of housing duct from above. Detach both mounting screws (Torx T 20) of blower motor.

10. Place part A of Special Tool 9512 onto shaft and turn right.
    Make sure the cutouts in the blower wheel line up with the cutouts in the blower housing.

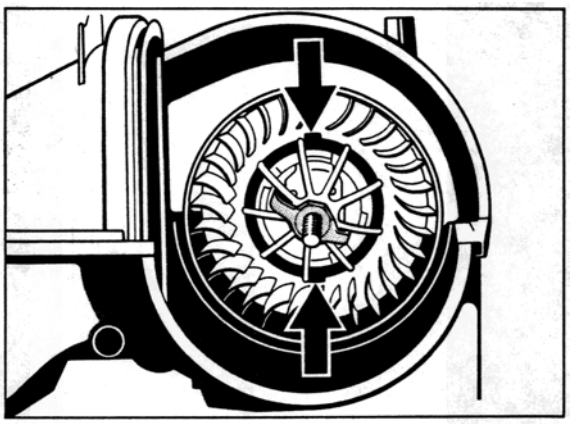

265-85

Note

Note the installation position for part A of special tool 9512. The hole for the fan wheel shaft is out of center (2 mm).

11. Push part B into the cutouts.

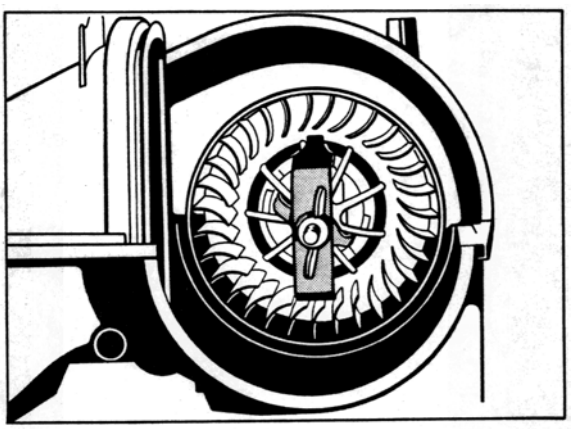

266-85

12. Tighten wing screw (part C) until the blower motor disengages.

13. Pull off connecting wire.

Left-hand blower

14. Detach reservoir from tank.

15. Pull wire off the housing cover. Screw out knurled nut and use a screwdriver to detach retaining clamp from housing cover. Take off housing cover from above.

16. For further steps, proceed as per items 9 to 13 above.

Note

When installing the motor, make sure the blower motor engages correctly and the connection wires are not squeezed.

Check if the blower wheel rotates freely.

Printed in Germany - 12. 19955

87 Pressure and temperature specifications

Refrigerant R 134 a

General test requirements:

- V-belt tensioned correctly.
- Solenoid clutch is energized.
- Condenser is clean.
- Sunroof, doors and windows closed.

1. Switch on air conditioner.
2. Set temperature control to max. cooling.
3. Set fresh-air blower to stage 4.

The pressures and temperatures specified in the below diagrams must be reached after approx. 10 mins. operation time at a speed of 2,000 rpm with the compressor switched on.

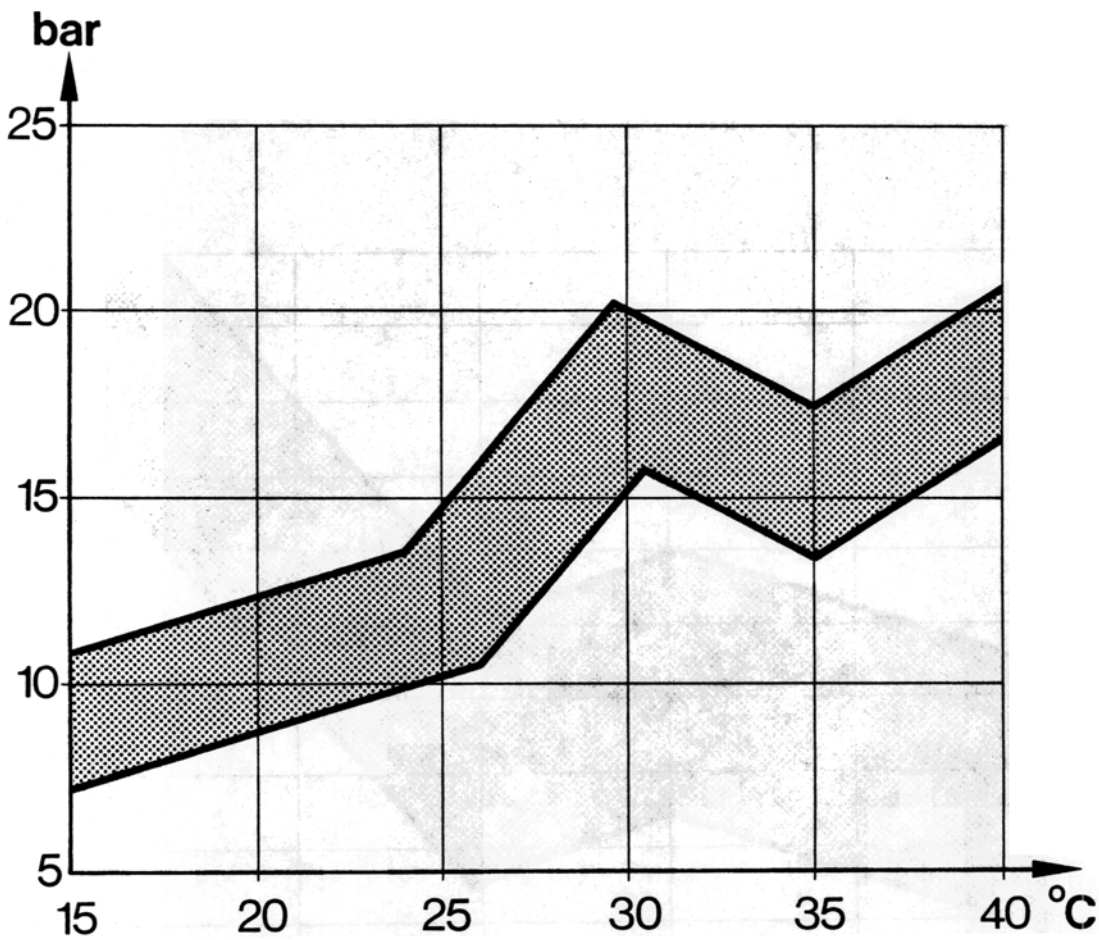

High pressure in refrigerant circuit vs. ambient temperature

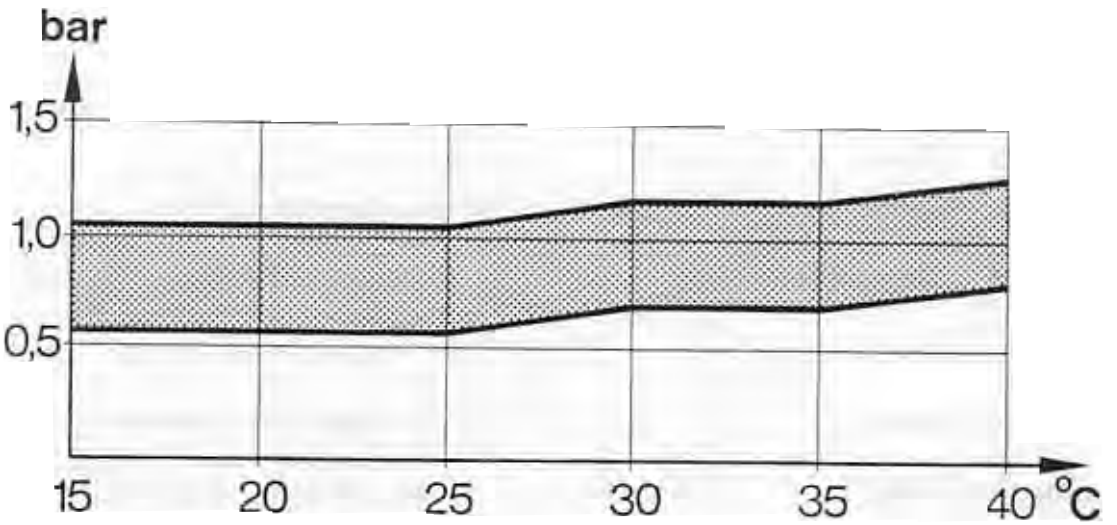

1356-87

Low pressure in refrigerant circuit vs. ambient temperature

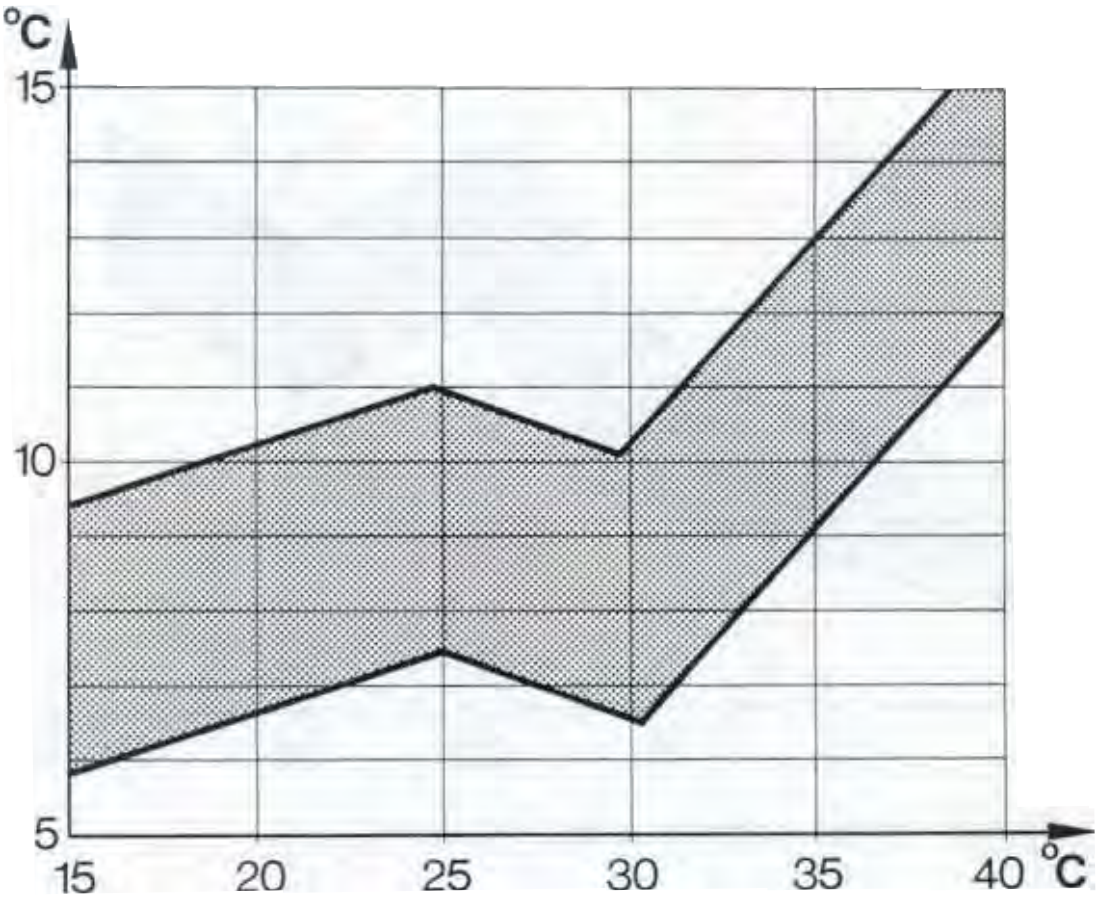

Air temperature at center nozzle vs. ambient temperature

87 01 19 Dismantling and assembling heater/ A/C unit

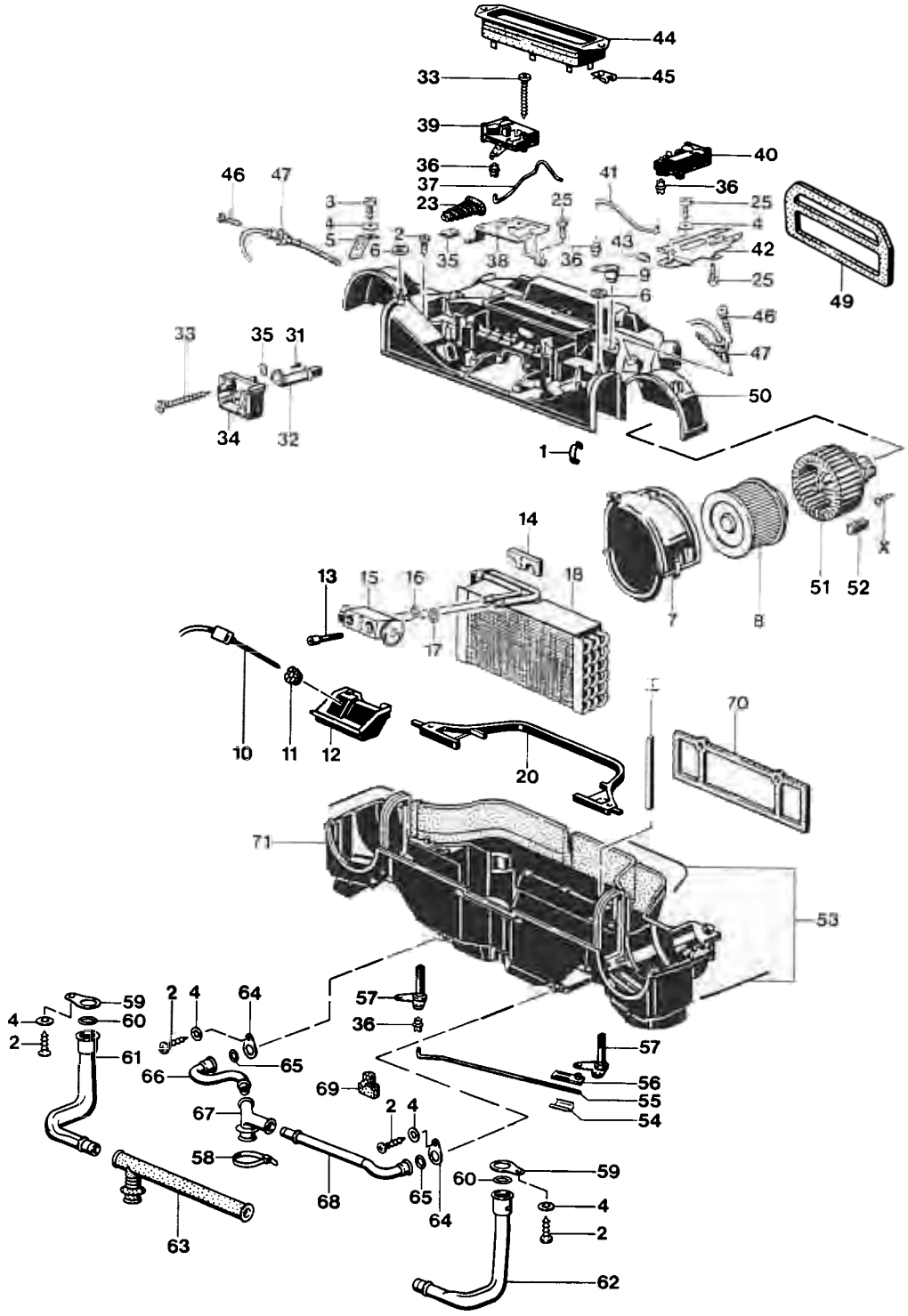

No.	Designation	Qty.	Note: Removal	Installation
1	Tensioning spring	32		
2	Screw	11		
3	Screw	9		
4	Washer	6		
5	Bracket	1		
6	Knurled nut	2		
7	Housing cover LH	1		
	Housing cover RH	1		
8	Particle filter LH	1		
	Particle filter RH	1		
9	Lever	1		
10	Evaporator temperature sensor	1	Built into wiring harness	Built into wiring harness
11	Grommet	1		
12	Cover			
13	Hexagon socket head screw M 5	2		
14	Retaining plate	1		
15	Expansion valve	1		
16	Gasket	1		Replace. Apply a thin coat of refrigerant oil.
17	Gasket	1		Replace. Apply a thin coat of refrigerant oil.
18	Evaporator	1	Do not damage fins	Do not damage fins
19	Link	1		
20	Gasket	1		
21	Deleted			
22	Deleted			

No.	Designation	Qty.	Note: Removal	Note: Installation
23	Bellows	1		
24	Deleted			
25	Screw	5		
26	Deleted			
27	Deleted (Temperature mixing flaps are located below the instrument panel in the driver and passenger footwells)			
28	Deleted			
29	Deleted			
30	Deleted			
31	Screw	1		
32	Joint	1		
33	Screw	4		
34	Motor for defroster or center nozzle	1		For adjustment, refer to page 85-1
35	Sheetmetal nut	4		
36	Linkage clip	5		
37	Linkage	1		
38	Bracket	1		
39	Motor for fresh-air flap	1		
40	Motor for footwell flaps	1		For adjustment, refer to page 85-1
41	Linkage	1		
42	Bracket	1		
43	Retaining clamp	3		
44	Sheetmetal frame with rubber bellows	1		
45	Sheetmetal nut	2		

No.	Designation	Qty.	Note: Removal	Installation
46	Screw	2		
47	Temperature sensor, mixing chamber	2	Built into wiring harness	Built into wiring harness
48	Deleted			
49	Gasket	1		
50	Housing upper section	1		
51	Blower LH			White plastic
	Blower RH	1		Black pastic
X	Screw (Torx T 20)	4		
52	Rubber mount	8		
53	Sealing ring	1		
54	Retaining clamp	1		
55	Linkage	1		
56	Lever	1		
57	Drive	2		
58	Tie-wrap	2		
59	Bracket	2		
60	Sealing ring	2		
61	Water drain tube	1		
62	Water drain tube	1		
63	Spacer	1		
64	Bracket	2		
65	Seal	2		
66	Water drain tube	1		
67	Bracket	1		
68	Water drain tube	1		
69	Rubber mount	1		
70	Gasket	1		
71	Housing lower section	1		

Modifications to heater / A/C unit from model year '95

Electrically controlled bypass air flaps

A solenoid valve controls the vacuum capsule of the bypass air flaps. The solenoid valve is mounted on the right of the heater / A/C unit.

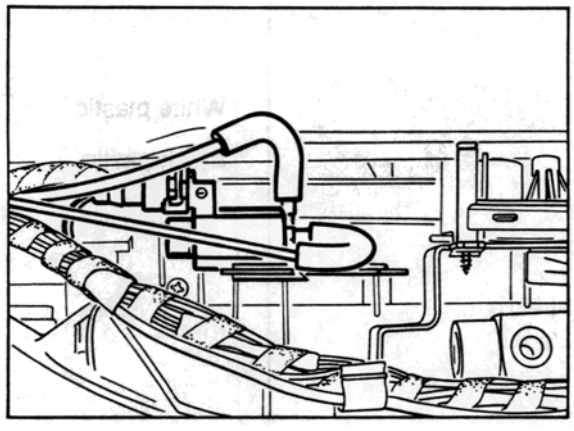

2181-87

As a spare part, the vacuum capsule with bypass air flaps is only available as a complete unit. If you need to remove the vacuum capsule with bypass air flaps, the heater / A/C unit must first be emptied and removed.

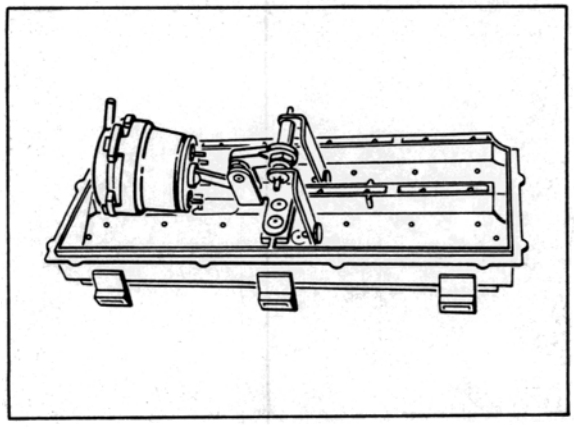

2182-87

87 02 19 Removing and installing heating and air conditioning control

Note

Use Special Tool V 160 (this code also is the Part No.) to remove the heating and air conditioning control.
Supplier: Matra Werke GmbH
Dieselstrasse 30 - 40
D-60314 Frankfurt

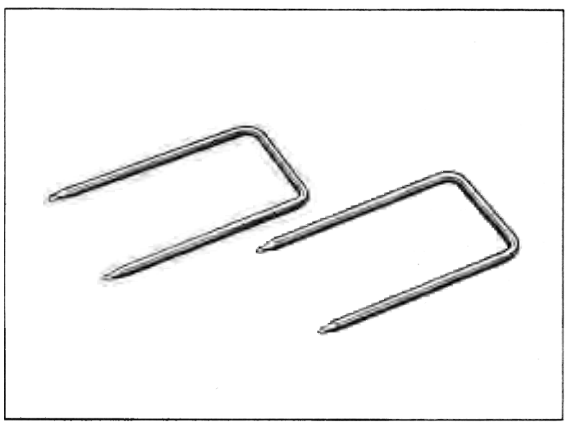

254-87

1. Insert and engage Special Tool in cutout provided in the heating and air conditioning control.

2. Push out heating and air conditioning control manually from below towards the rear.

3. Disengage 25-pin and 35-pin connector.

87 83 19 Removing and installing A/C system pressure switch

Removal

1. Draw off refrigerant charge with service equipment.

2. Remove cover of heater/ A/C unit (2 screws with washers).

3. Pull off connector at pressure switch.

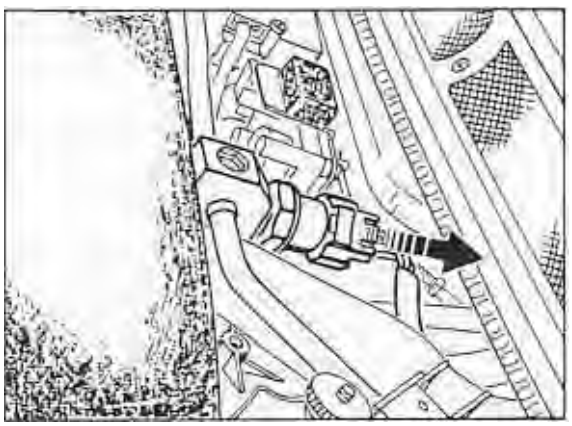

1796-87

4. Loosen and screw out pressure switch.

Installation

5. Replace O-ring at pressure switch and coat lightly with refrigerant oil.
   Tightening torque: 3 Nm (2 ftlb.)

87 03 Safety instructions for handling refrigerant R 134 a

The refrigerant R 134a used in this system is specified as a safety refrigerant. This means that this refrigerant is inflammable, non-explosive, non-toxic, non-irritating, odorless and tasteless. The following precautions should nevertheless be observed.

1. Avoid any contact with liquid or gaseous refrigerant. Treat all skin areas affected as in the case of frostbite; rinse with cold water immediately and consult a doctor. Wear goggles to protect your eyes. Consult a doctor immediately if refrigerant gets into your eyes. Wear protective gloves to protect your hands.

2. When repairing the A/C system, drain the system and clean the refrigerant. Even non-chlorine refrigerants must never be released into the atmosphere and must be disposed of correctly.
   Due to the differing chemical composition, different types of refrigerant must never be mixed with each other (not even in small quantities).

3. Never perform welding operations on parts of the closed A/C system or in their immediate vicinity. Heating generates excessive pressure regardless of whether the system is filled with refrigerant or not and may cause system damage or even explosions. R 134 a is completely non-toxic at normal temperatures but will decompose if it gets into contact with flames or if it is exposed to high temperatures.

4. Do not throw refrigerant bottles and do not expose filled bottles to direct sunlight or other heat sources for longer periods of time. The maximum admissible temperature of a filled refrigerant bottle must not exceed 45 °C.

87 03 17 Servicing the A/C system

Service equipment SECU 134

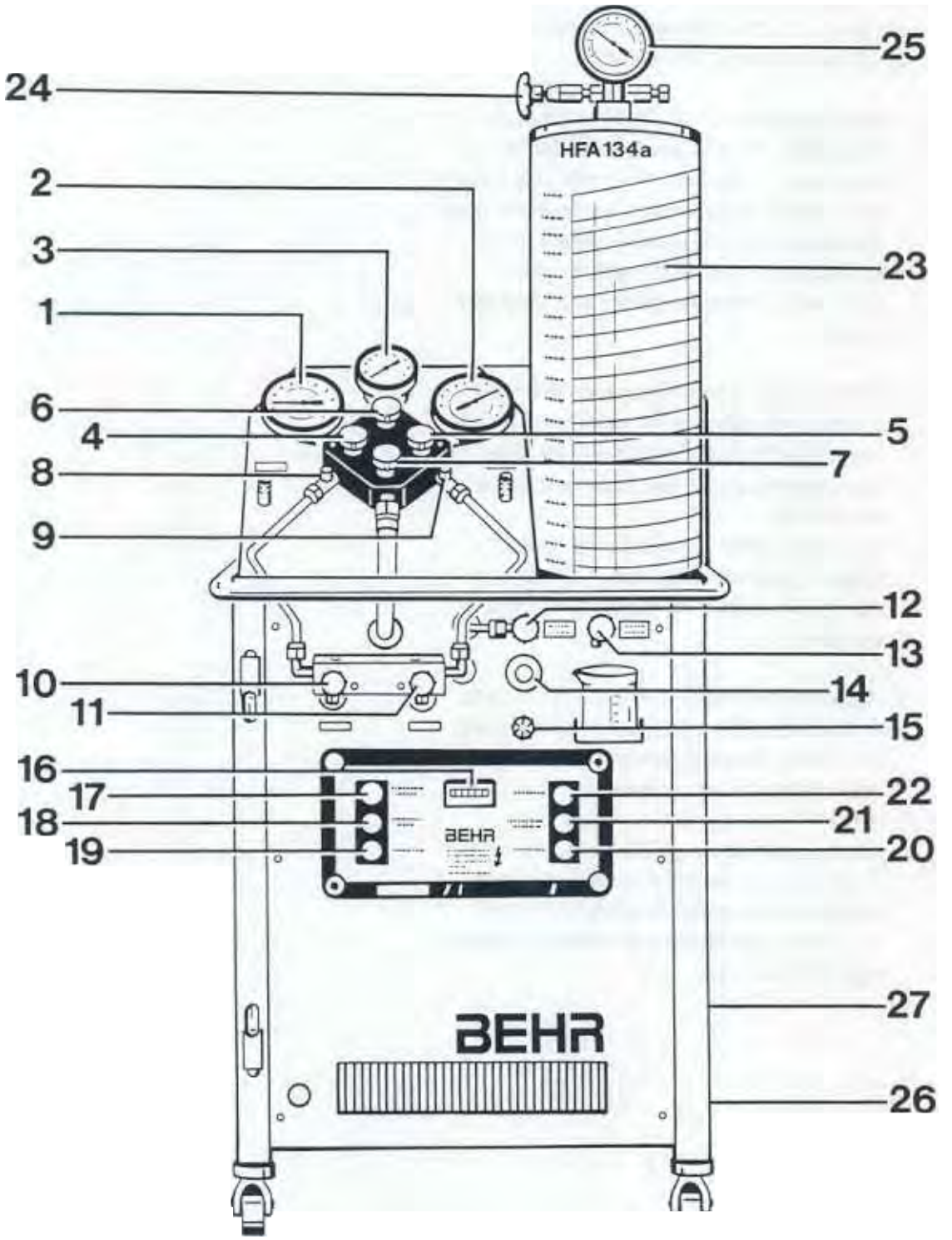

1 - Low-pressure gauge

2 - High-pressure gauge

3 - Torr gauge

4 - Low-pressure shutoff valve (blue)

5 - High-pressure shutoff valve (red)

6 - Torr gauge shutoff valve (black)

7 - Vacuum pump shutoff valve (yellow)

8 - Low-pressure fitting

9 - High-pressure fitting

10 - Shutoff valve for refrigerant inlet

11 - Shutoff valve for refrigerant outlet

12 - Shutoff valve for refrigerant oil inlet

13 - Refrigerant oil drain valve

14 - Humidity indicator

15 - Vacuum oil tank fitting

16 - Operating hours gauge

17 - SUCTION FINISH (ABSAUGEN ENDE) warning lamp

18 - SUCTION/PURGE (ABSAUGEN/ REINIGEN) pressure switch

19 - ON/OFF main switch

20 - HEATING (HEIZUNG) pressure switch

21 FAULT (STÖRUNG) warning lamp

22 - VACUUM PUMP (VAKUUMPUMPE) pressure switch

23 - Filling cylinder with weight scales

24 - Filling cylinder shutoff valve

25 - Filling cylinder high-pressure gauge

26 - Refrigerant oil inlet flange

27 - Refrigerant oil accumulator inspection glass

Note

Observe manufacturer's operating instructions or repair instructions when working on the service equipment.

Assembly operations that require opening the refrigerant system

The system contents must be disposed of properly after all operations on the A/C system that require opening the refrigerant system. Make sure the relevant safety regulations are observed.

To keep dirt and humidity out of the A/C line system, be careful to ensure absolute cleanliness whenever working on the system. Never clean any parts of the system with hot steam. Use only nitrogen for cleaning.

When replacing a component, plug all openings with suitable plugs.

Never use refrigerant R 12 to fill or top up an A/C system designed for R 134 a, not even vice-versa (this is due to the different components and refrigerant oils used).

General sequence of assembly:

1. Draw off refrigerant.
2. Remove failed component.
3. Evacuate.
4. Check system for tightness.
5. Flush with refrigerant.
6. Draw off system contents once more.
7. Evacuate.
8. Fill.

Note

Check seals when disconnecting or reconnecting hose connections.

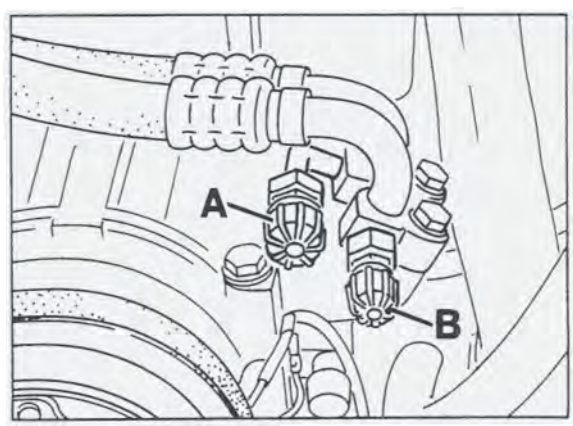

1790-87

A - High pressure
B - Low pressure

Drawing off refrigerant and cleaning system

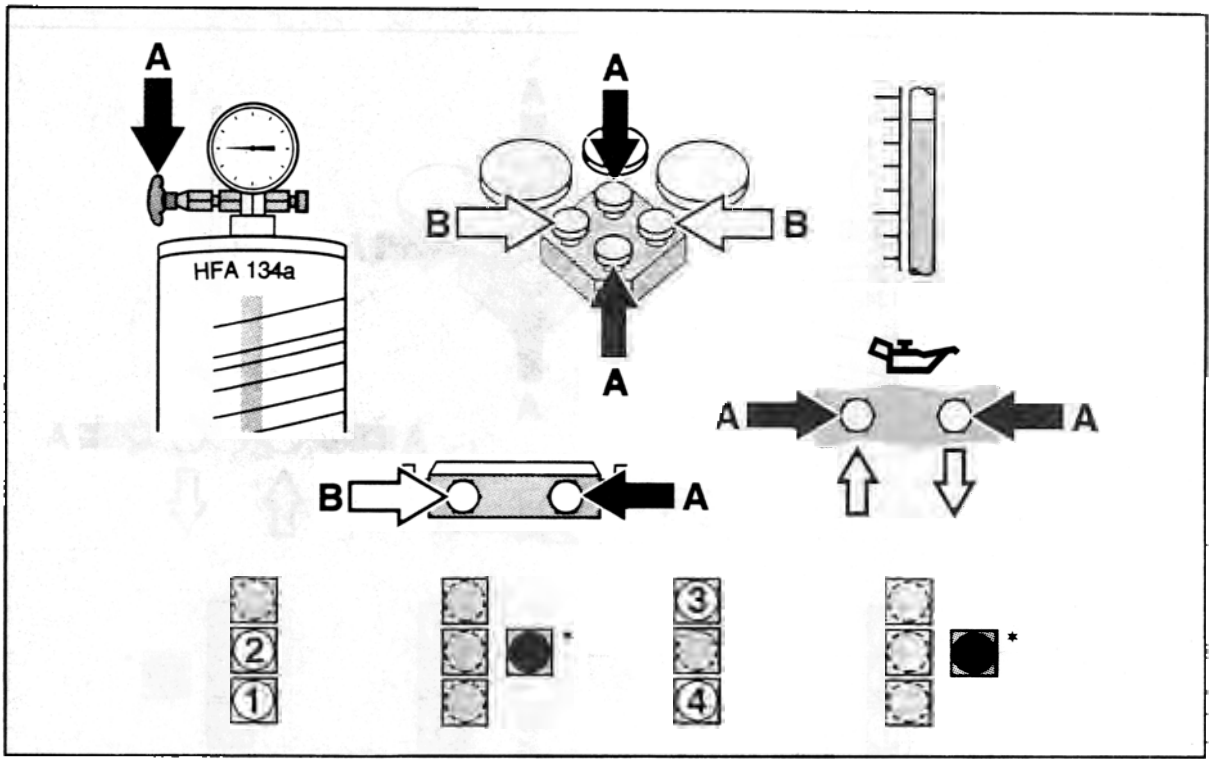

Note

Close all valves before each step.

A - Close B - Open

Drawing off: Start

1 - ON / OFF
2 - SUCTION / PURGE

End

3 - SUCTION / END
4 - ON / OFF

* Pressure too high / filling cylinder full.
Drain refrigerant from filling cylinder into refrigerant bottle (approx. 50 %).

Cleaning refrigerant

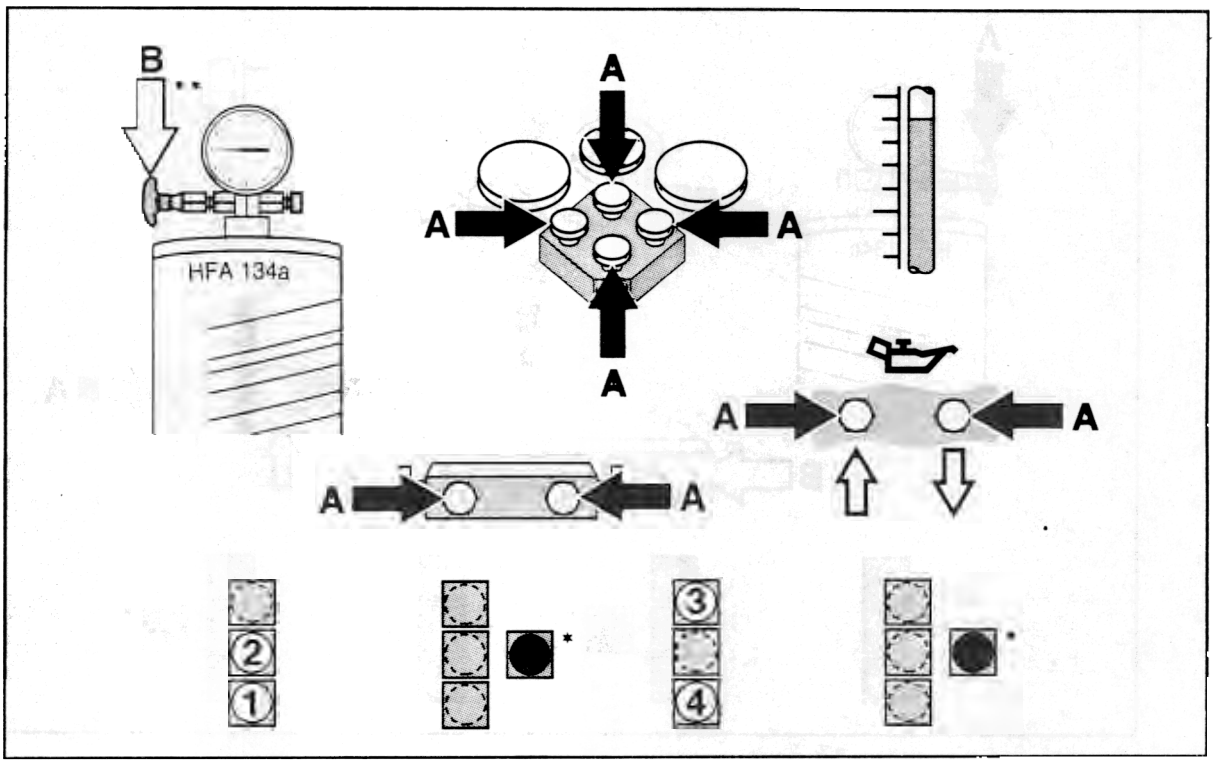

A - Close B - Open

Cleaning: Start End

1 - ON / OFF
2 - SUCTION / PURGE

3 - PURGE / END
4 - ON / OFF

Pressure too high / filling cylinder full.

OPEN one turn. CLOSE after approx. 15 minutes.

Draining old refrigerant oil

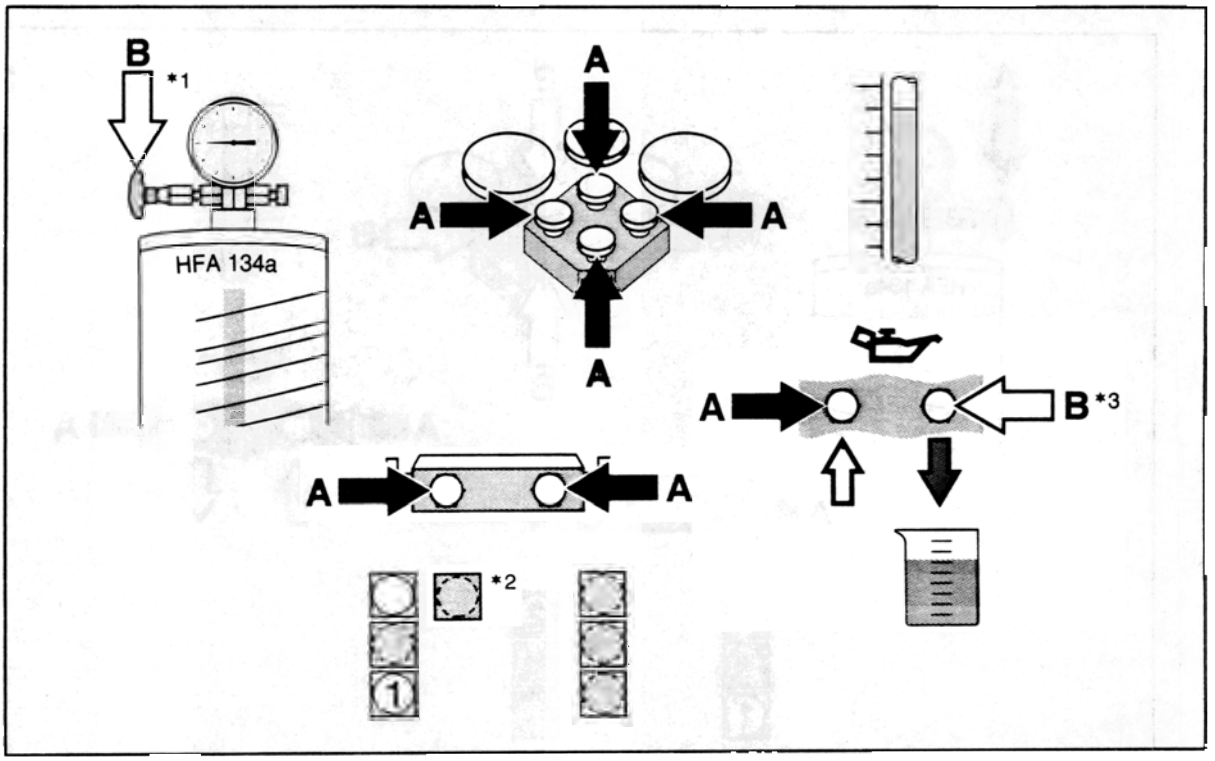

A - Close B - Open

1 - ON / OFF

Instructions

* 1 open until *2 OFF, then *1 CLOSED and 3* OPEN.

Evacuating

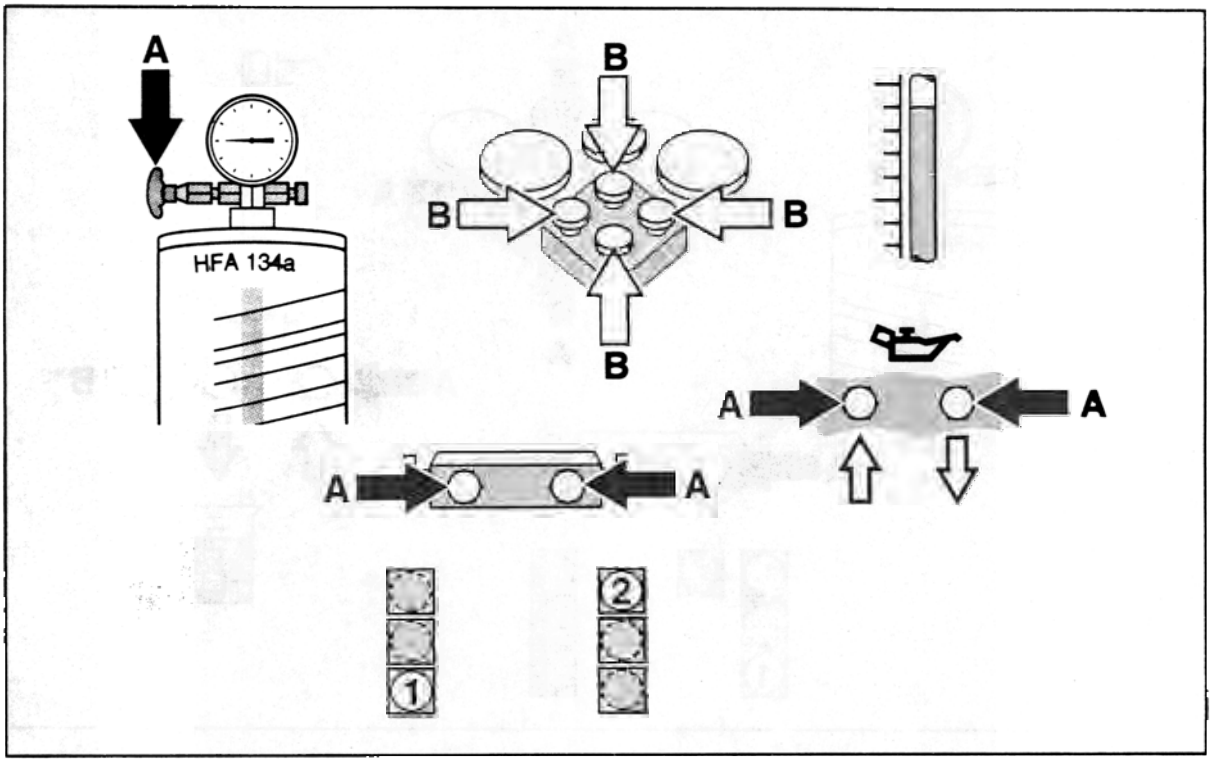

A - Close B - Open

1 - ON / OFF
2 - VACUUM PUMP

Minimum evacuating time: 15 minutes.

Topping up with new refrigerant oil

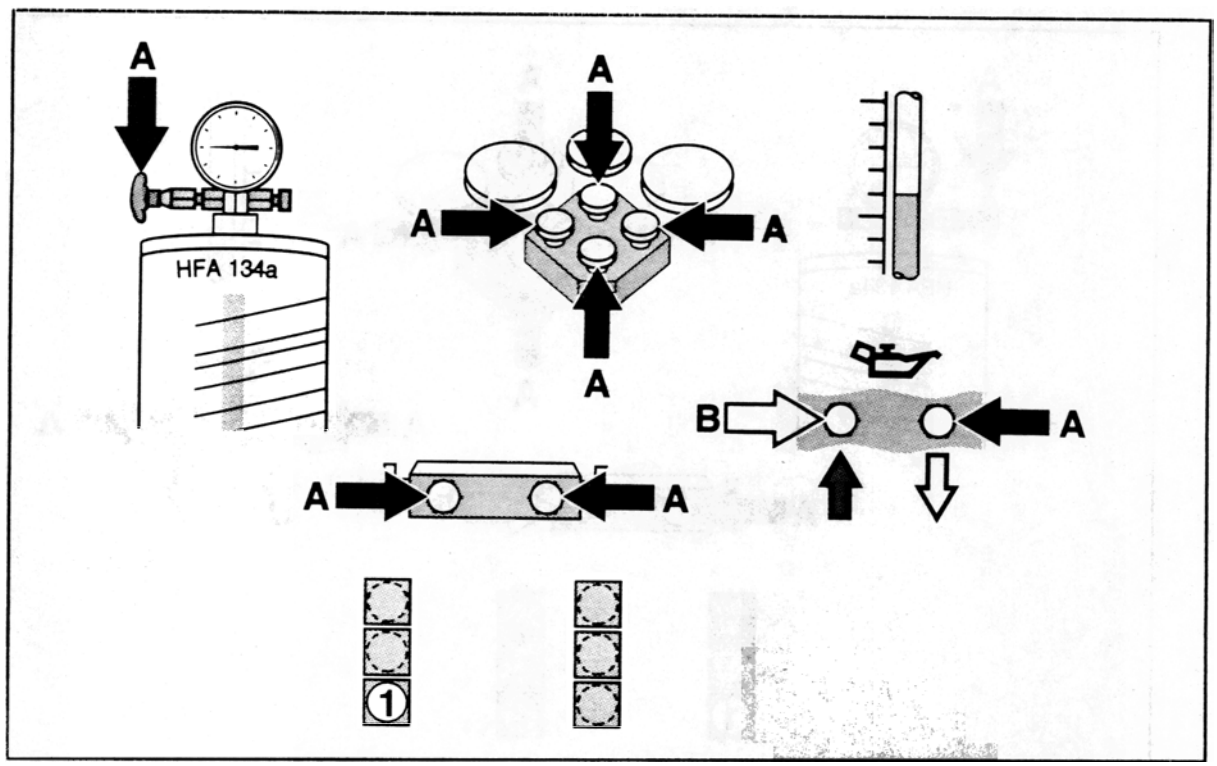

A - Close B - Open

1 - ON / OFF

Filling from high-pressure side

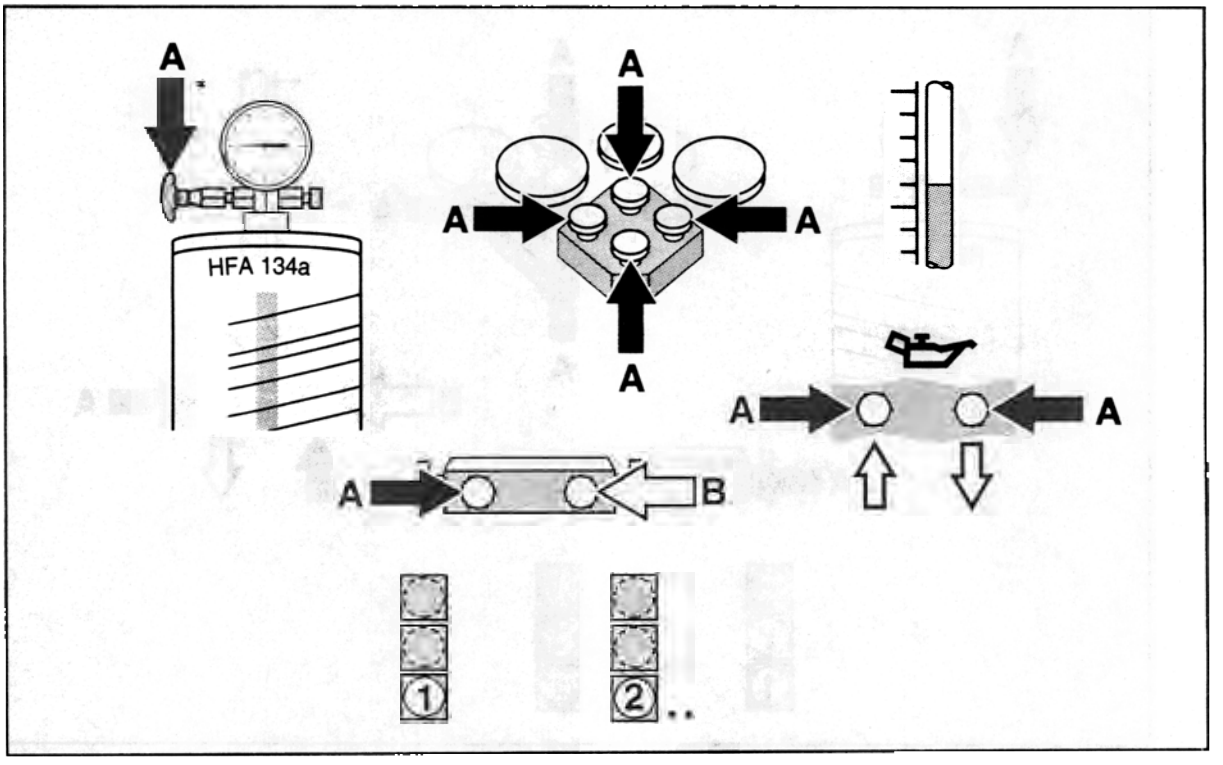

A - Close B - Open

1 - ON/OFF
2 - HEATING

* Pressure: 8 to 10 bar.

** If pressure is below 8 bar.

Draw off internally after using the SECU (page 87-17).
Close manual valves on both hose lines first.

Refilling A/C unit

Note

The A/C unit is no longer fitted with an inspection glass for refrigerant level. If the unit develops insufficient cooling power, the refrigerant must be removed, the specified refrigerant volume filled in and the unit tested for tightness.

1. Remove refrigerant using service unit.

2. Determine refrigerant oil concentration in removed refrigerant.

3. Fill in new refrigerant oil.

4. Evacuate.

5. Fill in specified volume of refrigerant.

6. Check system for tightness.

Distribution of oil quantity in refrigeration circuit

Total oil quantity	**140 ± 20 cc**

After the system contents have been drawn off, the following oil quanitites remain in the system:

Condenser	approx. **20 cc**
Evaporator	approx. **30 cc**
Fluid reservoir including piping	approx. **10 cc**
Compressor	approx. **50 cc**
Oil quantity circulating in refrigeration circuit	approx. **40 cc**

Note

On **new vehicles,** the drawn-off oil quantity is approx. **15...20 cc**.
On **older vehicles,** this oil quantity is higher. The oil quantity drawn off must be added to the system again.

Refrigerant oil drawn off from an A/C unit that has already been operated must **not** be reused. When replacing a component, the oil quantity must be topped up by the amount remaining in the removed component.

When the A/C system is **depressurized,** the refrigerant oil circulating in the circuit (approx. **40 cc**) will be lost and must be added to the A/C system before filling up with refrigerant.

87 55 19 Removing and installing liquid tank

Removal

1. Remove refrigerant using service unit.

2. Remove rear wheel housing liner from front left fender.

3. Loosen hose clamp on liquid tank. Unscrew the two hexagon head screws on the liquid tank and lower the liquid tank out. Insert air-tight plugs in liquid lines immediately.

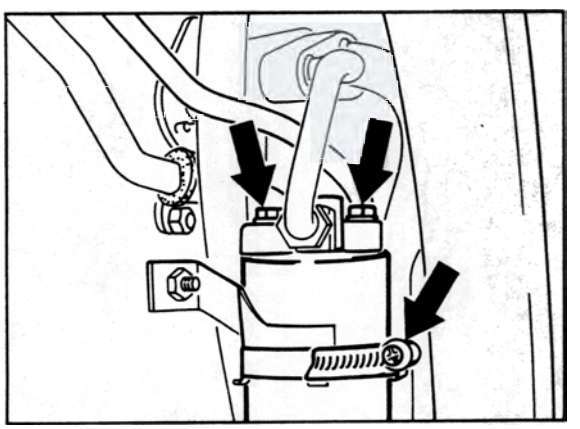

1897-87

Installation

1. Do not remove plugs until just before installation. Replace O-ring on branch piece and refrigerant line and wet O-ring with refrigerant oil.

2. Tighten the two hexagon head screws on the liquid tank to 10 Nm (7 ftlb.).

3. Determine refrigerant volume and top up with refrigerant oil **(volume drawn off + 10 cc).**

Note

The reservoir must be replaced if system malfunctions occur (e.g. due to accident damage or loss of air conditioning system pressure). The refrigerant sight glass has been deleted.

Refrigerant oil drawn off from an A/C system that has already been in operation must not be reused.

87 50 19 Removing and installing condenser

Removal

1. Use service unit to draw off refrigerant.

2. Unbolt and take off left front wheel.

3. Remove wheel housing liner and lower section of front spoiler.

4. Disconnect connector linking the ballast resistor to the condenser fan. Undo refrigerant pipes from condenser, using a suitable tool to lock.

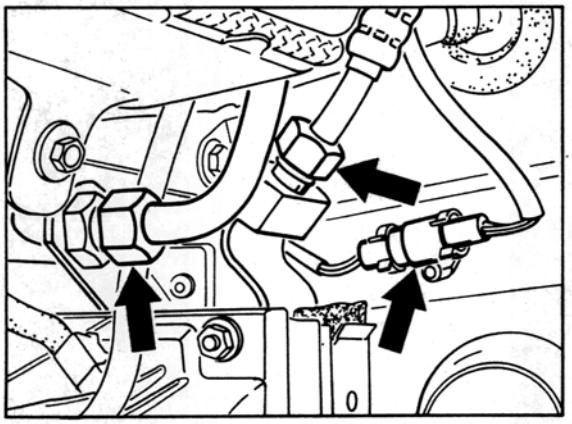

1898-87

5. Plug ports and pipes immediately with a suitable air-tight seal.

6. Pull off electrical connector from fan motor. Unclip headlight wire and vent hose.

7. Disconnect both headlight cleaner hoses from regulator valve. Detach condenser support bracket from lower body end and remove as a unit.

8. Undo self-tapping screws (4 ea.) from support bracket and pull out condenser from above.

Installation

1. Remove plugs inserted in pipes and condenser port only imediately before refitting components.

2. Replace O-rings and coat lightly with refrigerant oil.

3. **Tightening torques** for refrigerant pipes:
   5/8" - 18 UNF **17 ± 3 Nm (12.5 ± 2)**
   3/4" - 16 UNF **24 ± 4 Nm (18 ± 3)**

4. Determine refrigerant oil volume and refill with refrigerant oil (**drawn off volume + 20 cc**).

Note

Refrigerant oil drawn off from an A/C system that has already been operated must not be reused.

87 53 19 Removing and installing condenser fan

Removal

1. Remove lower front spoiler section on the left side.

2. Pull off electrical connector from fan motor. Unclip headlight wire and vent hose.

3. Pull both headlight washer hoses off the regulator valve. Remove fan bracket from condenser retaining bracket and take out from below.

4. Detach fan from retaining bracket and take off fan.

Note

Check after installation if fan is able to rotate freely.

87 01 19 Removing and installing heater / air conditioning unit

Removal

1. Take off battery ground cable.

2. Draw off refrigerant with service equipment.

3. Remove fuel tank.

4. Remove cover of heater/ A/C unit (old version is held in place by 2 bolts with washers, new version is fitted with spring clamp).

5. Remove Central Electrical System.

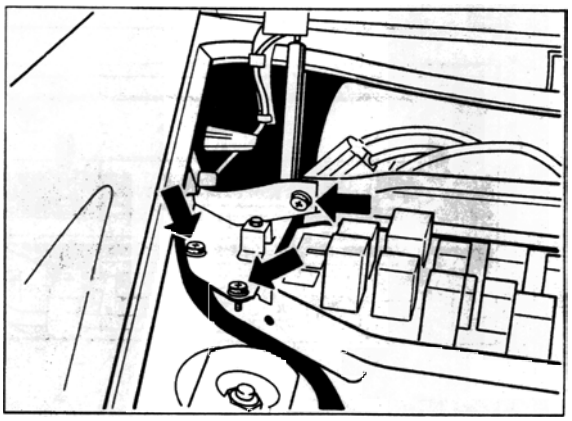

241-87

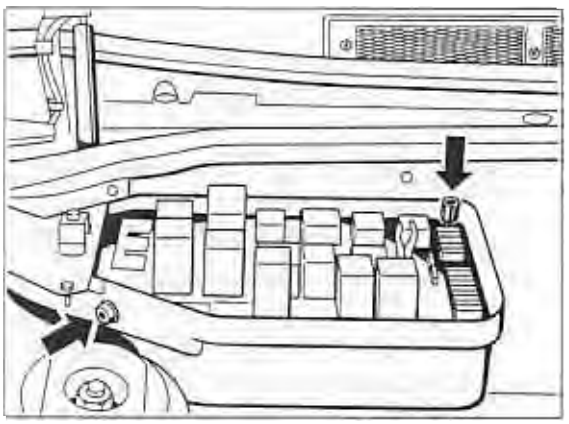

240-87

6. Remove wiring harness cover.

7. Detach electrical connector from fan housing cover and place Central Electrical System on fender (use fender protectors).

8. Detach wire connector from blower final stage.

9. Remove firewall.

10. Remove fresh-air cleaner grille.

11. Undo fastening screws.

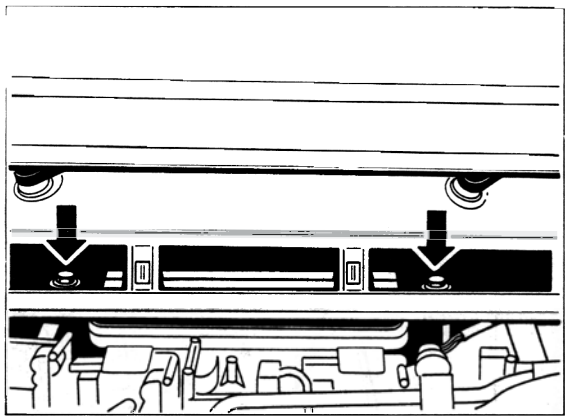

242-87

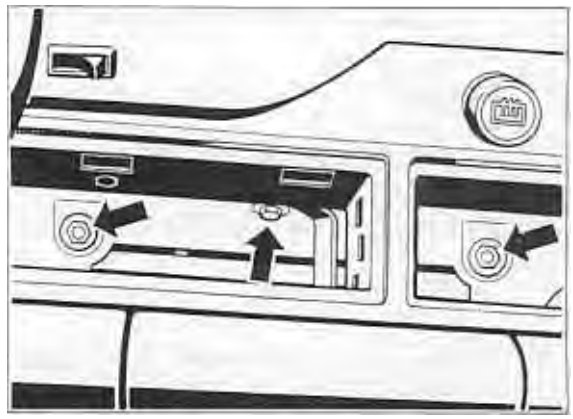

250-87

12. Disconnect air conditioning pipes from expansion valve. Plug ports and piping immediately with air-tight seals.

13. Pull off connector from pressure switch.

14. Detach A/C piping bracket and move A/C piping out of the way.

15. Pull off condensation water and water drain hoses (disconnect tie-wraps) and push rubber grommets forward.

16. Remove radio, heater/ A/C regulator and glove compartment. Pull off connector above glove compartment.

17. Undo fastening bolt and nuts.

18. Remove side panel and pull off right and left hot air induction flanges.

19. Pull off connector from servo motor for temperature mixing valves.

20. Separate wiring harness from heater/ A/C regulator (harness is tied to the passenger compartment wiring harness) and pull through to passenger side.

21. Start by removing heater/ A/C unit on right-hand side. Pull off air ducting to side nozzles and pull wiring harness along.

Installation

1. Detach spring clamp of left and right heater/ A/C unit (new version).

2. When re-installing, fit right-hand air guide before heater/ A/C unit is brought into installation position (for better accessibility). The left-hand air guide can be pushed in place with the heater/ A/C unit fitted after the large instrument cluster has been removed.

3. Replace O-ring for refrigerant pipes at expansion valve and coat lightly with refrigerant oil.

Note

Be sure to top up with refrigerant oil when replacing the heater/ A/C unit or the evaporator. Determine refrigerant oil volume and refill with refrigerant oil (**volume drawn off + 30 cc**). Refrigerant oil drawn off from an A/C system that has already been operated must not be reused.

87 34 19 Removing and installing compressor

Removal

1. Draw off refrigerant with service equipment.

2. Pull off wiring connector.

3. **Only slacken** compressor mounting bolts. Undo tensioning bolt lock nut and screw out tensioning bolt.

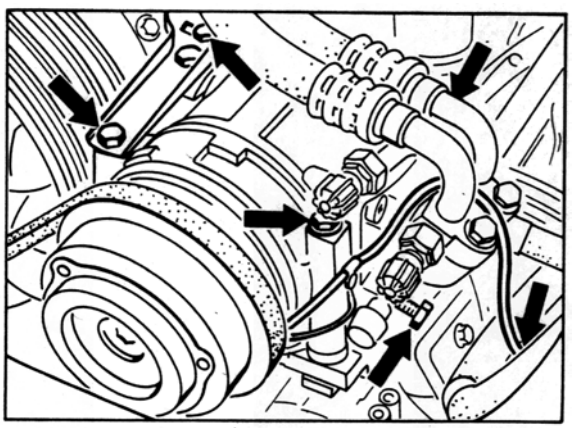

1477-87

4. Detach refrigerant pipes from compressor. Plug ports and piping immediately with air-tight seals.

5. Move compressor to the left and take off V-belt. Take out mounting bolts and take off compressor.

Installation

Note

New compressors are pressurized and are filled with the respective total oil quantity required for the refrigerant circuit. The oil quantity remaining in the individual components must therefore be taken into account.

1. Screw cap off the service valve and release pressure from compressor. Detach service valve from compressor (4 bolts) and take off valve.

2. Pour approx. **50 cc** of refrigerant oil from the compressor into a graduated measuring glass. The remaining oil quantity (approx. **90 cc**) remains in the compressor.

Note

Refrigerant oil drawn off from an A/C system that has already been operated must not be reused.

3. **Tightening torque** of compressor mounting bolts (M 8 x 125 bolts): **28 Nm (20.5)**

4. **Tightening torque** of refrigerant pipe (M 8 x 32 bolts): **23 Nm (17)**
   Replace all mounting bolts during each reassembly (micro-sealed bolts).
   Replace O-rings and coat lightly with refrigerant oil.

5. **Tightening torque** of service valve (4 bolts): **25 Nm**

6. Remove plugs from piping and compressor port only immediately before refitting.

87 27 19 Removing and installing magnetic clutch

Removal

1. Use a standard strap wrench to keep thrust plate from turning and undo mounting bolt.

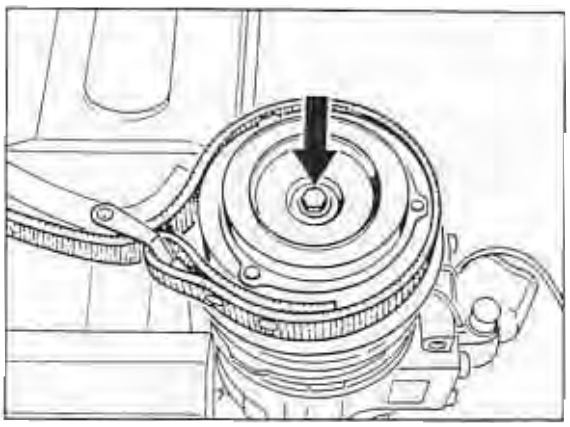

1927-87

2. Screw a M 8 bolt into the thrust plate threads until the thrust plate can be taken off by hand.

3. Take out spacers and remove circlip with a pair of standard circlip pliers. Pull off pulley manually.

4. Unscrew solenoid coil wire from compressor housing. Remove circlip. Take solenoid coil off the compressor housing.

Installation

1. Place solenoid coil into compressor housing. Lock pin must engage into the lock pin hole

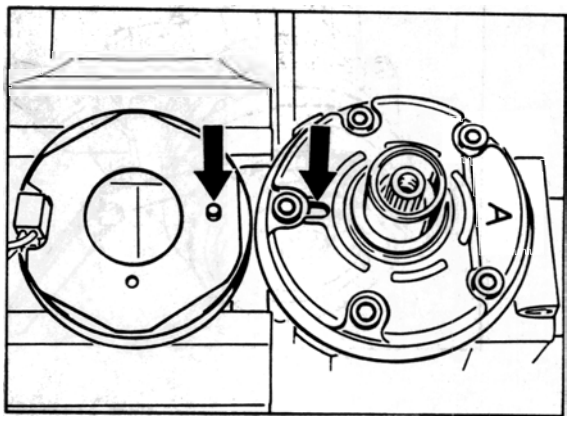

1928-87

2. Fit circlips. The chamfered face of the circlip points upward (towards mounting bolt).

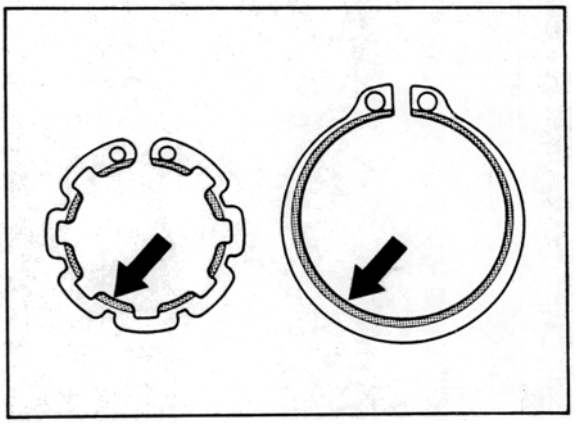

1930-87

3. Tighten thrust plate mounting bolt. **Tightening torque: 14 Nm (10)**

4. Use a feeler gauge set to check air gap between thrust plate and pulley.
   Air gap: 0.5 mm ± 0.15 mm

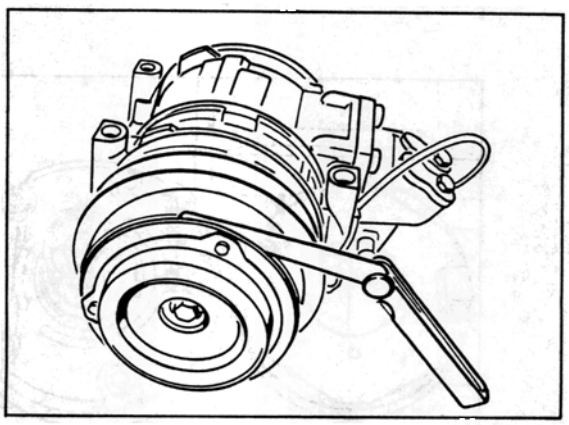

1929-87

If the air gap is outside the limits, adjust air gap by inserting or removing spacers.

87 70 19 Removing and installing expansion valve

Removal

Take off battery ground cable.

2. Draw off refrigerant with service equipment.

3. Remove heater/ A/C unit cover (old version is held in place by 2 bolts with washers, new version is fitted with spring clamp).

4. Remove Central Electrical System.

5. Remove wiring harness cover.

6. Detach electrical connector at fan housing cover and place Central Electrical System on fender (use fender protectors).

7. Detach connector from blower final stage.

8. Remove firewall.

9. Separate A/C piping from expansion valve. Plug ports and piping immediately with air-tight seals.

10. Undo and take out expansion valve. Plug piping to evaporator immediately with air-tight seals.

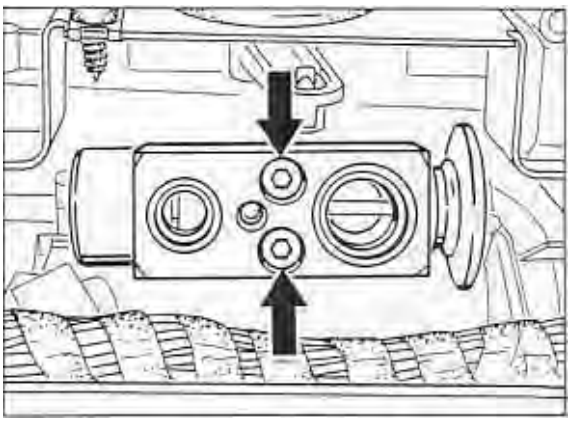

1966-87

Installation

Remove plugs only directly before refitting. Replace O-rings and coat lightly with refrigerant oil.

Refrigerant oil drawn off from an A/C system that has already been operated must not be reused.

Tightening torques:

M 5 bolt **6 Nm (4.5)**
M 6 bolt **9 Nm (6.6)**

90 73 Tuning model '94 remote control units

Vehicles with immobilizer M 530

Note

As a result of tolerances in the ignition lock, it is not possible to define precisely the position at which the buzzer contact is closed by the ignition key.
Depending on the tolerances, the buzzer contact(S) in the ignition lock

may be closed between positions 0 and I (Fig. A)

or

between positions I and II (Fig. B).

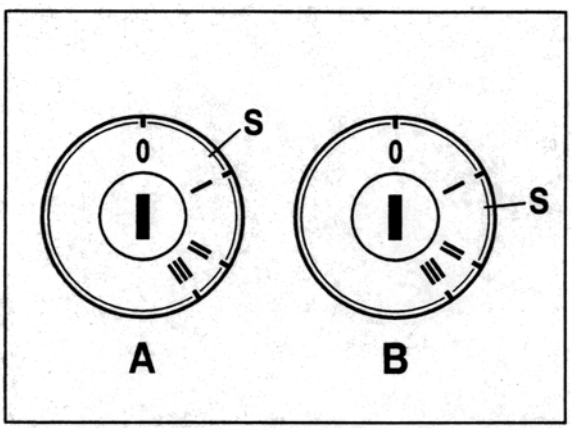

2213-90

I = terminal X (windshield wipers on)
II = terminal 15 (ignition on)
III = terminal 50 (starter)

When the key is removed from the ignition lock, the buzzer contact is opened (switched off). This signal is required for tuning the remote control units.

The position where the buzzer contact is operated can be located as follows.

Manual transmission vehicles.

The buzzer contact signal is transmitted via pin 12 in the 14-pin connector (passenger compartment wire harness, connector X4/1 under the left seat).

1. Remove the left seat. Do not unplug the connector; carefully remove the connector cover and connect a test lamp to pin 12 (red/black) and ground.

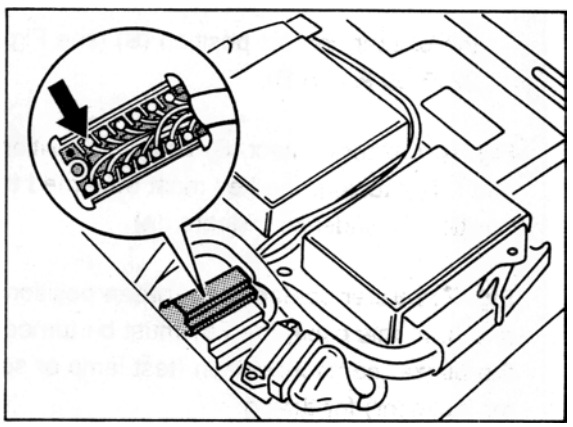

2214-90

2. Turn the key slowly from position 0 to position II in the ignition lock and observe the position at which the test lamp lights up.

Tiptronic vehicles:

The buzzer contact signal can be observed on the
LEDs of the selector indicator (speedorneter instrument cluster).

1. Turn the key slowly from position 0 to position II in the ignition lock.

2. Observe the position at which one of the LEDs of the selector indicator lights up.

Important!

Manual and Tiptronic vehicles:

Depending on the position of the buzzer contact, for tuning (point 6 on page 3), the ignition key must be turned to

- position I (windshield wipers on)

  or

  the buzzer contact position (S) (see Fig. 2213-90 A and B).

Fig. A: buzzer contact (S) between position 0 and I. For tuning, the key must be turned to position I (windshield wipers on).

Fig. B: buzzer contact(S) between positions I and II. In this case, the key must be turned to the buzzer contact position (test lamp or selector indicator) for tuning.

Exception!

If the buzzer contact is reached just before or directly at "ignition on":
...tuning is not possible. In this case contact Porsche, Dept. VKG.

Tuning:

Tiptronic vehicles:

Before tuning the remote control units, check the key position at which the buzzer contact is operated. Then tune the units (see pages 3 and 4).

Manual vehicles:

Try to tune the units first.
Reason: In the majority of cases, the buzzer contact will be operated between ignition key positions 0 and I.
If it is not possible to tune the units on a manual vehicle, a test lamp must be used to locate the buzzer contact position.
Tuning must then be repeated.

Tuning the remote control units

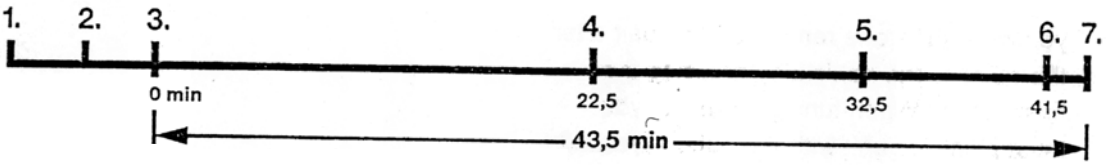

The diagram shows the sequence of events. The time required is at least 43.5 minutes.

1. **Unlock** the vehicle **using the remote control unit** and open the door. Do **not** insert the key into the ignition lock (the door of the vehicle may be open or closed.)

2. Wait **3 minutes.** After this time, the immobilizer will **prime itself.**
   In order to ensure that you comply with the times given below, please use a stopwatch or alarm clock. If necessary, write the times down.

   Note:

   When the instructions below require "switch ignition on and off", it is sufficient to turn the ignition key until the ignition is switched off.

3. Now **start the stopwatch and at the same time switch the ignition on.**
   Leave the ignition key turned to "**ignition on**".
   Switching the ignition on starts a sequence of operations. After 41.5 minutes (± 1 Min.), the system reaches the status "tuning of remote-control units."

4. After **22.5 minutes** (± 2 Min.), the **ignition** must be switched off and on again.

5. After a total time of **32.5 minutes** (± 2 Min.), the **ignition** must again be switched off and on.
   Then lift the **windshield wipers** off the windshield (to detect ignition key position I (see point 6).

6. After a total time of **41.5 minutes** (± 1 Min.), perform the following sequence, starting with the ignition on:
   - set wiper switch to stage 1
   - ignition off
   - ignition on
   - ignition off
   - remove key from ignition lock
   - insert key into ignition lock and turn to pos. I **or** to buzzer contact (not **"ignition on"**).
     If the key is in the correct position, either the wipers must be switched on in pos. I or, in buzzer contact position, the test lamp or selector LED must light up (see examples on page 2).
   - Remove key from ignition lock.

7. After the key has been removed, you have **a total time of 1 minute for tuning** the remote control units. During this 1 minute, you must tune one remote control unit after the other to the vehicle by pressing the pushbutton. When tuning the units, you must point the unit with the button pressed towards the control unit for **at least 5 seconds**.

8. The status "tuning of remote control units" is ended when:
   - 4 remote control units have been tuned
     or
   - a fifth remote control unit is operated within the minute
     or
   - one unit is operated twice
     or
   - the minute has elapsed.

Note

Any remote control units already assigned to a vehicle which are not tuned during a tuning session lose their validity for the vehicle.

Emergency unlocking of the door using the key

Note

The key should only be used for emergency unlocking in the event of a failure of the remote control unit.

1. Hold the key in the unlocking position and open the door at the same time using the door handle. The alarm is triggered immediately.

2. It is not possible to deactuate the immobilizer or the alarm system. The engine cannot be started.

3. The door is locked again as soon as it is closed. The central locking system remains in operation.

90 68 Immobilizer from model '95

Emergency unlocking of the door using the key

The key should only be used for emergency unlocking in the event of a failure of the remote control unit.

De-activation of immobilizer (with vehicle locked)

It is possible to switch off the acoustic alarm for 2 minutes so that the immobilizer may be de-activated by **entering a four-digit code number specific to the vehicle**. The four-digit code number (key card) is entered using the ignition key by a **sequence of ignition on and off operations**. The time available for entering the number is **100 seconds.** Each digit of the code number is determined by the number of **ignition OFF-ON** operations, starting with the left digit. To enter "0", the ignition must be switched from off to on 10 times.

You must **wait for the warning light to go on before entering the next digit**.

1. The door lock must be **unlocked, locked and unlocked again in 5 sec.** The acoustic alarm is then interrupted after 1 second.

2. Open the door within **10 seconds** and switch the **ignition** on. The **warning light** in the clock will then light up and go out again after **15 seconds.**

3. **Switch the ignition off and on again within 5 seconds. The warning light** will light up and start to **flash after 15 seconds.**

4. You must start to **enter the code number** within **5 seconds**.

5. Example: code number 1312

1 = ignition off-on
wait for warning light
3 = ignition off-on, off-on, off-on
wait for warning light
1 = ignition off-on
wait for warning light
2 = ignition off-on, off-on

6. If the number is correct, **the warning light will flash.**
   This is also the point at which tuning of the remote control units can start.

Note

After the warning light has flashed (point 6) and the ignition has been switched on again, the engine can be started.

The immobilizer is deactivated and the alarm system and central locking system are unlocked. If the warning light does not flash after the code number has been entered, steps 1-5 must be repeated.
Emergency deactivation does not deactivate the self-priming function of the immobilizer system.

Printed in Germany - I3, 1995

Tuning remote control units

Note

A maximum of four remote control units may be assigned to a vehicle at the same time. Additional remote control units must **always** be tuned to a vehicle **together** with the two units already assigned to it. Before the code number is entered, the **immobilizer** must be primed but the alarm and central locking systems must not be activated. This status is reached **90 seconds** after the ignition key has been removed or **3 minutes** after the vehicle has been unlocked using the remote control unit if the ignition key is not turned in the lock.

Entry of code number

1. Switch the **ignition** on. The **warning light** in the clock will go on and off again after **15 seconds**.

2. Follow the instructions in points 3 to 6 on page 7.

3. If you have reached the tuning status (point 6 page 7 **warning light is flashing**) the remote control units **must be tuned within one minute.**

4. Press the pushbuttons of the remote control units until the **LEDs** of the alarm system in the doors **flash** (as an acknowledgement). Operate all the remote control units one after the other.

5. If no more remote control units are operated within **1 minute** or the ignition is switched off, tuning is stopped.

911 Carerra RS vehicles

Note

As Carrera RS vehicles are not equipped with a central locking system, both doors must be locked and unlocked using the key.

To deactivate the immobilizer, the remote control unit must be **operated twice** in the following situation.
The immobilizer has self-primed and the ignition has not been switched on.

If the ignition is switched on before operating the remote control unit or the remote control unit is used to activate the immobilizer, the remote control unit must only be operated **once.**

The procedure for tuning remote control units is the same as for the 911 Carrera (993) from model '95.

Printed in Germany - I3, 1995

90 68 19 Removing and installing immobilizer control unit

Removal

1. Remove left seat.

2. Remove shear bolts using a cross cut chisel and remove cover.

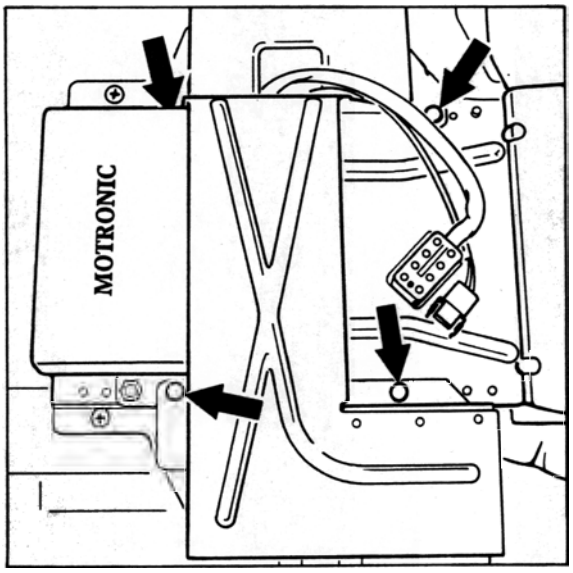

2006-24

3. Loosen control unit and unplug connector.

Installation

Break off new M 6 x 13
shear bolts, part no. 999 074 051 02 using a Torx E6 socket wrench.

Removing and installing control unit of RS vehicles

Removal

Loosen flanged nut using a cross cut chisel.

Installation

Tighten new M5 flanged bolt with stop teeth (part no. 999 507 472 02) using circlip pliers, e.g. Hazet 4843a-12.

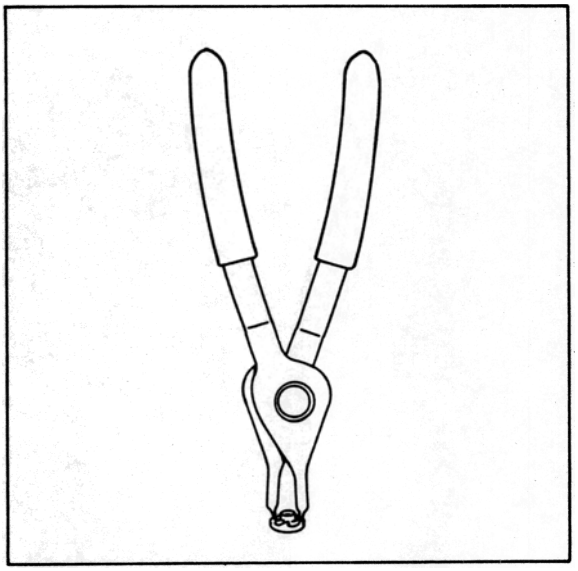

2219-24

Note

Tighten the control unit carefully. The plastic mounting lugs can break off. The serial number must **not be left on the control unit** after installation. The two stickers must be handled confidentially together with the customer. One sticker must be attached to the invoice and the second sticker given to the customer.

90 73 37 Disassembling and assembling hand-held transmitter

Car keys with integrated hand-held transmitter for vehicles with immobilizer

Note

The car key has been designed as a folding key.
Folding out:
Hold housing in your left hand and press "A" button.
Folding in:
Press "A" button and fold key into the housing manually.

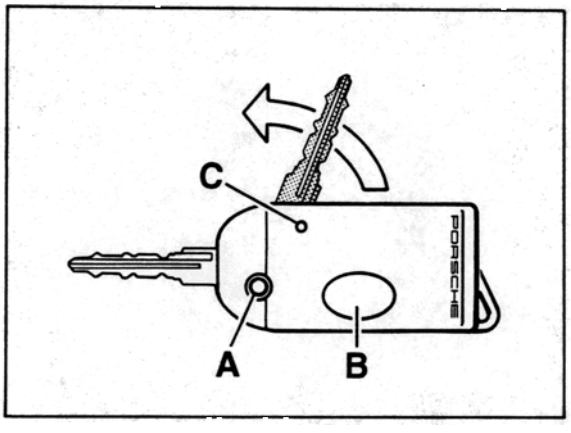

2307-90

A - Button to fold the key in and out

B - Key for remote control

C - LED

Disassembling housing with key

1. Slacken screw in upper part of the housing and remove upper part.

2. Carefully remove battery and printed-circuit board.

3. Fold out car key with "A" button from lower part of the housing.

4. Carefully open and pull out cap using a small, pointed screwdriver and working from the front (arrow). Remove compression spring.

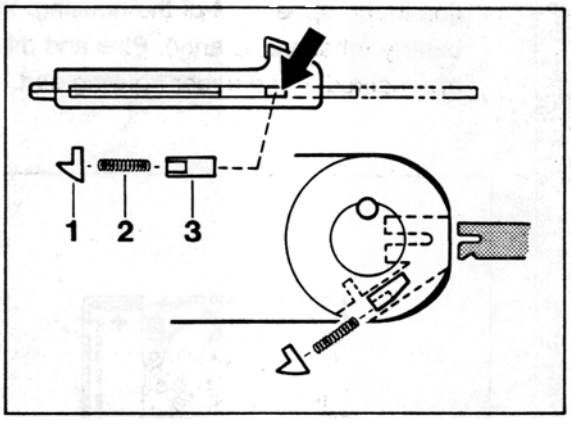

2308-90

1 - Cap
2 - Compression spring
3 - Locking slide

5. Push locking slide in the lower housing part slightly back using a screwdriver and pull out key.

6. Reinstall compression spring and cap. Snap new key into the lower part of the housing.

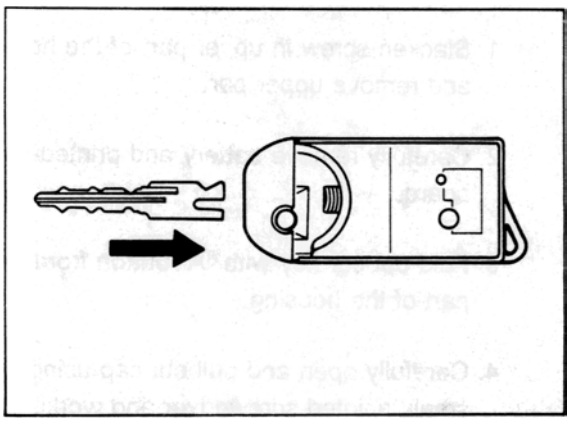

2310-90

7. Install printed-circuit board in correct position in the upper part of the housing. Install battery (observe polarity). Plus and minus are marked in the upper housing part.

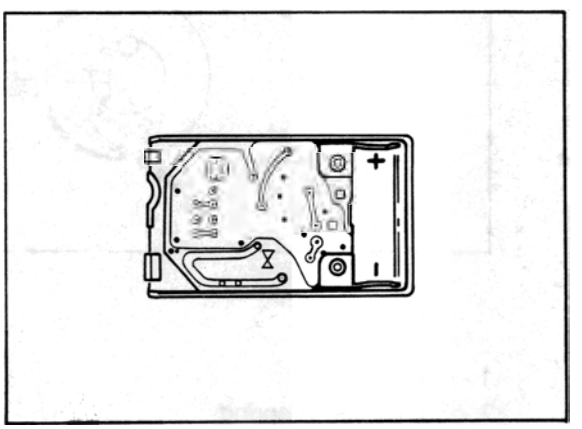

2311-90

8. Fit upper housing part and check operation.

91 55 23 Retrofitting a D-Net telephone system

D-Net telephone wiring harness

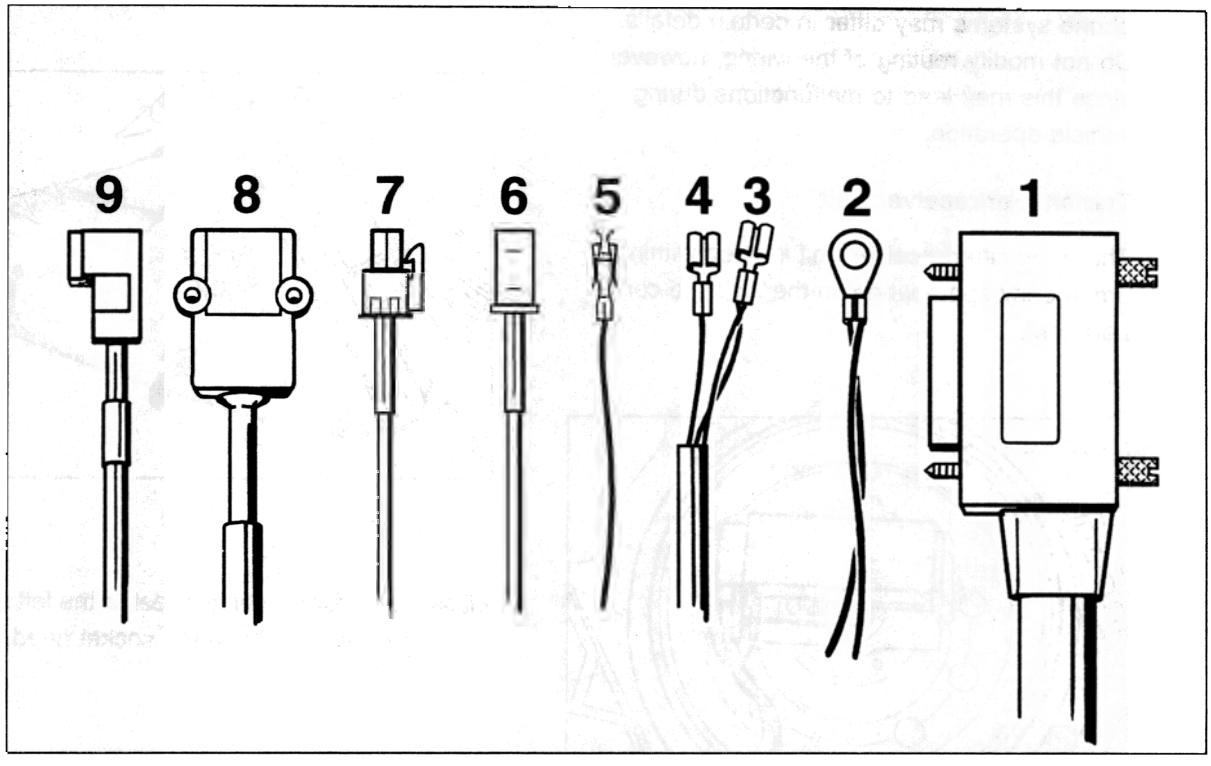

1962-9T

1 - Transmitter/receiver connection

2 - Ground / ground point VI

3 - Term. 30 connection

4 - Term. 15 connection

5 - Radio muting connector III - black
Contact No. 2

6 - Microphone connection

7 - Speaker connection

8 - Separate card reader connection

9 - Operating unit connection

Rubber grommet and terminal are fitted to the wiring harness.

Installation position of components

Note

Retrofitting is described taking the Motorola International 2000 as an example. Other telephone systems may differ in certain details. Do not modify routing of the wiring, however, since this may lead to malfunctions during vehicle operation.

Transmitter/receiver unit

The transmitter/receiver unit is fitted within the emergency spare wheel in the luggage compartment.

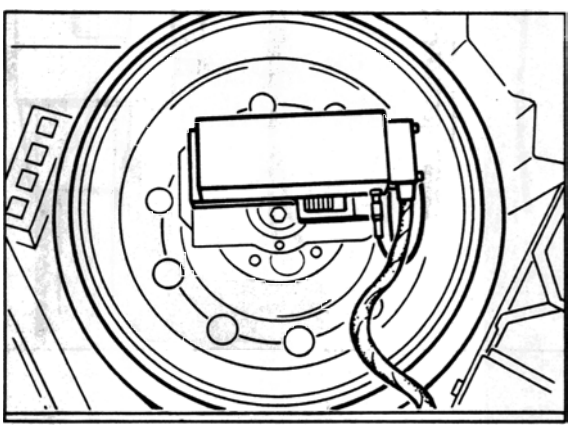

1950-91

The mounting bracket for the transmitter/receiver unit is included with the respective telephone version.

Telephone console

The telephone console is bolted to the right-hand side of the center console in the footwell.

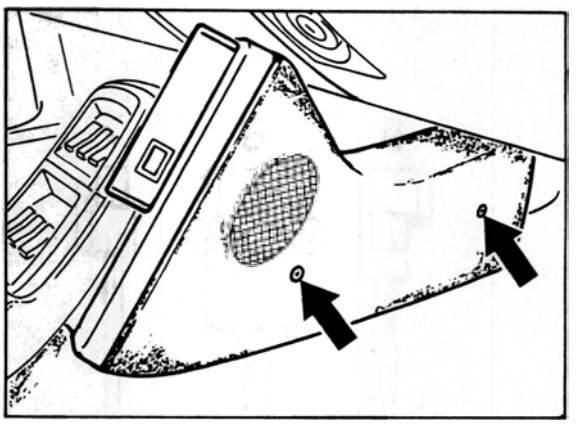

1951-91

Fit seat stop for passenger seat to the left seat rail below the front hexagon socket head bolt.

Operating unit

Assembly instructions and/or drilling template are supplied with the respective telephone model.

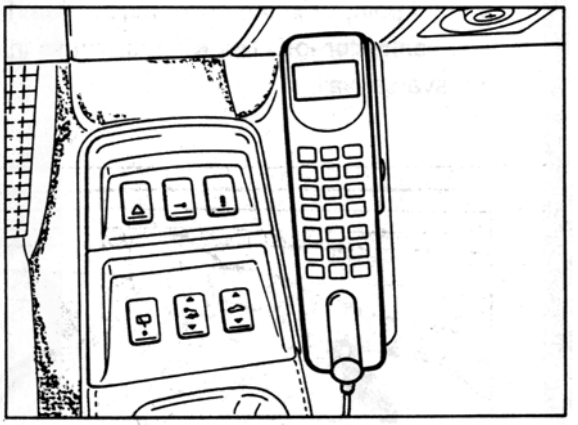

Handsfree microphone

The handsfree microphone is located in the upper section of the steering column panel.

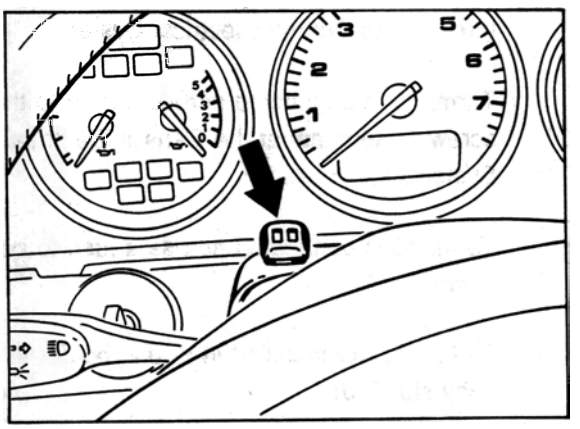

1953-91

Hole pattern for handsfree microphone assembly panel.

The figure below shows the hole pattern from below (upper section of steering column panel).

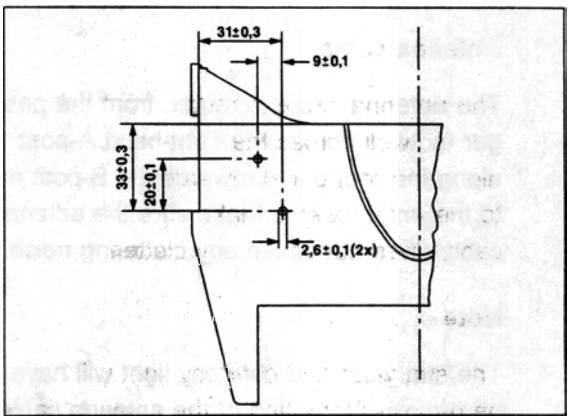

1954-91

Fitting an antenna to the Coupé

Center of vehicle and **100 mm** from rear edge of roof panel.
Drill hole dia. 18 mm

Fitting an antenna to the Cabriolet

Vehicle center and center of windshield outer frame/soft top mounting.
Drill hole dia. 18 mm

Note

The windshield antenna must **only** be used for radio operation.

Routing the wiring

Always insert suitable rubber grommets when routing wires through drill holes in sheetmetal panels.

Antenna cable

The antenna cable is routed from the passenger footwell across the right-hand A-post along the roof panel towards the B-post and to the antenna exit. Make sure the antenna cable does not cause any clattering noise.

The sun visor and courtesy light will have to be removed for fitting of the antenna cable.

D-Net wiring harness

The wiring is routed from the transmitter/receiver unit towards the front wiring harness. It is tied to the front-end wiring harness with standard tie-wraps. In the strut area, a mark to aid assembly is attached to the wiring harness.

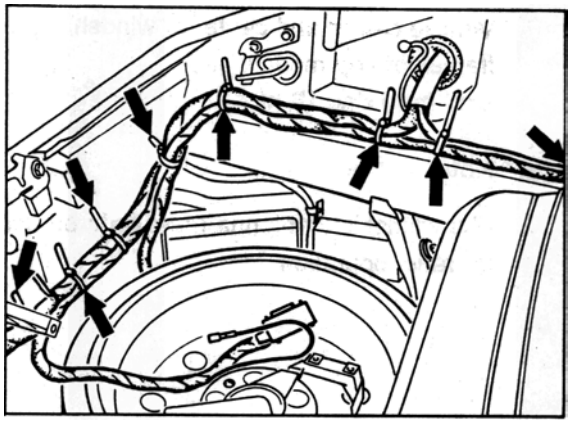

1955-91

Attach white mark to standard tie-wrap location.

Fit edge protector to strut tower area. Attach telephone wiring harness with wire clamp to wiring harness cover. Connect ground to ground point VI in the cover hinge area. Fit end connector to D-Net wiring harness in transverse wall.

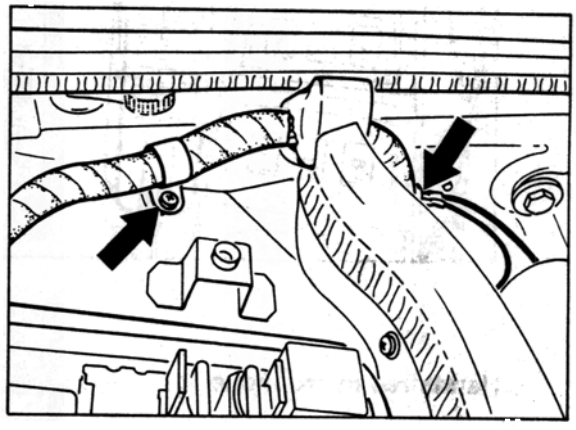

1956-91

Connect power supply wires (term. 15 and term. 30) to Central Electrical System.

Term. 30 is connected across a fuse to the screw-on terminal at the Central Electrical System.

Term. 15 is connected across a fuse to connector K 13.

The fuses are installed in a fuse holder in relay slot R 62.

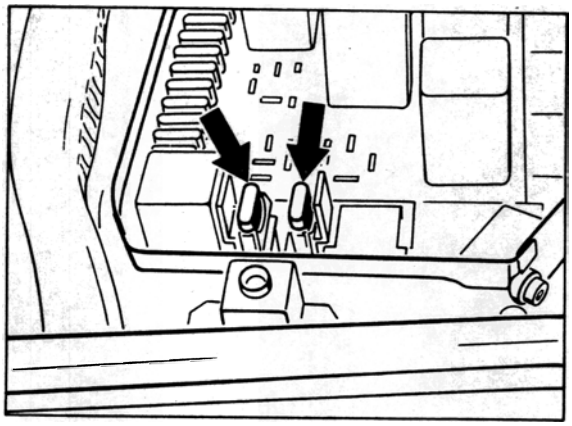

1957-91

Fusing of term. 15: 7.5 A
Fusing of term. 30: 7.5 A

The wiring harness is ruoted across a separate 41 mm dia. drill hole into the passenger compartment. Make drill hole at the indicated centerpunch point in the Transverse wall. The rubber grommet destined for this purpose is fitted to the wiring harness

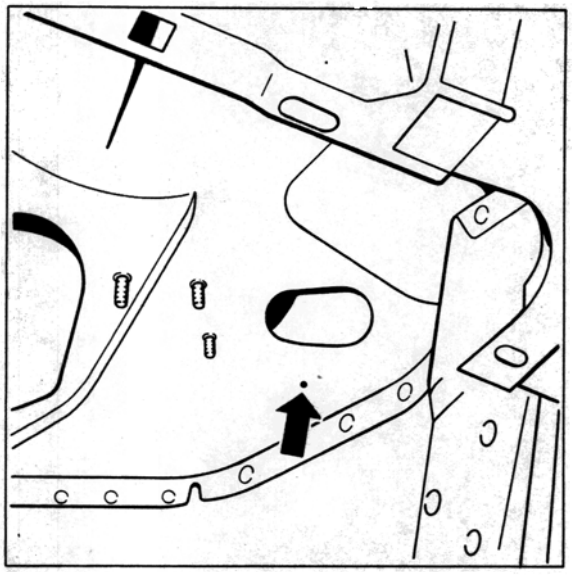

802-91

The power supply leads to the operating unit and handsfree microphone are routed along the passenger compartment wiring harness to the tunnel and along the tunnel upper edge.

Note

On **M 692** (optional radio with **CD changer**), the radio muting wire no. 5 (telephone mute line) is **insulated** and tied to the harness.

Exception:

With the München RD 104 (M 687) radio **with sound package** (M 490), the telephone mute line must be connected to contact 4 of connector I.

If a sound package is **not** installed, the telephone mute line must not be connected and must remain insulated.

With the Düsseldorf RCR 84 (M336) radio, the telephone mute line must not be connected: tie up the **insulated** line.

See also technical information bulletin no 70/94 for 911 serie.

91 20 01 Check list of possible faults on the Porsche Autoradio CR 10

Symptom	Reason	Remedy	Refer to radio Op. Manual page:
• Radio cannot be switched on	• Fuse faulty	• Replace fuse	53
	• Incorrect polarity of wiring harness wires ⇨ Faulty fuse	• Replace fuse, Remove fault in harness	
	• Pin in connector block chamber A is bent	• Realign	53
• Unit switches off by itself	• According to specification; After 1 h, if terminal 75 (ignition) off	• Switch unit on again	
• Code input not possible	• Incorrect or no code card	• Compare series No. on unit and code card ⇨ Inform Becker GmbH company	32 + 33
• "WAIT" on LCD	• Incorrect code was entered 3 times	• **Caution:** Unit must remain on for 10 minutes until new code can be entered	32 + 33
	• Incorrect code was entered 9 times	• **Caution:** Unit must remain switched on for 60 minutes until new code can be entered	32 + 33
• No sound; Low sound; Sound different at front, rear, left or right	• Fader or balance settings not in center position	• Adjust fader or balance	34 + 35
	• " Phone" display on LCD	• Mute via telephone?	46
• Fader, balance cannot be adjusted	• Active traffic program	• Wait for end of traffic program	44 - 46
• Optical theft protection does not flash	• Function is switched off	• Function can be adjusted	33
	• LED faulty	• Inform Becker GmbH company	33

Symptom	Reason	Remedy	Refer to radio Op. Manual page:
• Alarm is triggered constantly	• Insulating plate on chassis missing	• Replace radio	
	• Mounting frame rotated by 180°	• Rotate mounting frame by 180°	
• Alarm inoperative	• Wire not connected	• Connect wire	
	• Contact on mounting frame bent	• Straighten	
• No sound	• Speaker chamber B not connected, Connector not connected properly	• Connect unit correctly	53
	• Sound system chamber C not connected, Connector not connected correctly	• Connect unit correctly	53
	• Pins in connector block of chamber B or chamber C bent	• Straighten	53
	• Speaker faulty	• Check speaker	
	• Wiring harness missing, incorrect or faulty	• Check wiring harness	53
	• Volume adjustment	• Increase volume adjustment	34
	• Sound system faulty	• Check sound system	53
	• Unit is muted	• Deactivate muting	45
• Sound present in spite of muting	• Only during initial 20 seconds after turning on if muting was activated when unit was last turned off	• None, sound is automatically switched off after 20 sec	45
• Cassette winds automatically during CC operation	• According to specifications (in blank sections) ⇨ Skip-blank function	• Deactivate Skip-blank function	48
• "CLEAN" displayed during CC operation and beep of approx. 1 sec,	• After approx. 30 hours of cassette operation ⇨ User display	• Use cleaning cassette	49

Symptom	Reason	Remedy	Refer to radio Op. Manual page:
• No sound in CD operating mode	• Pins in connector block chamber C bent	• Straighten	53
	• Wiring harness for CD changer missing, incorrect or faulty	• Check wiring harness	53
• No radio reception, noise, no station names	• Antenna cable not connected or faulty	• Check antenna cable	53
	• Antenna not raised (mech.)	• Pull out antenna	
	• Antenna not raised (electr.); Control lead not o.k.; Pin 5 of chamber A bent	• Connect control wire; Check control wire; Straighten	53
• No station names are displayed	• According to spec. ⇨ Fix mode	• Switch to RDS mode	38 + 39
	• Poor reception quality, No RDS sensing possible	• Tune in to other station	38 + 39
• Tuned station is no longer on station button	• Caution: 3 levels: FM mode, TP mode, Fix mode	• Adjust to correct level	37 - 39, 42, 44
	• Poor reception quality, no RDS sensing possible, "-- -- -- -- -- -- -- -- --" in display	• Tune in to other station	15
• Sound adjustments have changed	• When radio is reconnected, automatic basic setting is activated	• None	
• Sound adjustments differ	• 2 user sound memories exist	• None	36
	• Different sound adjustments for FM, traffic program, AM, CC and CD modes	• None	34
• Muting no longer turned on	• If no traffic stations can be received, muting is automatically deactivated	• None	19
• Radio shifts automatically between stations	• Only for regional stations: Regional operation is off ("RP OFF")	• Regional operation must be switched on ("RP ON")	43

91 60 23 Retrofitting of a CD changer

The following spare parts are required for retrofitting of a CD changer:

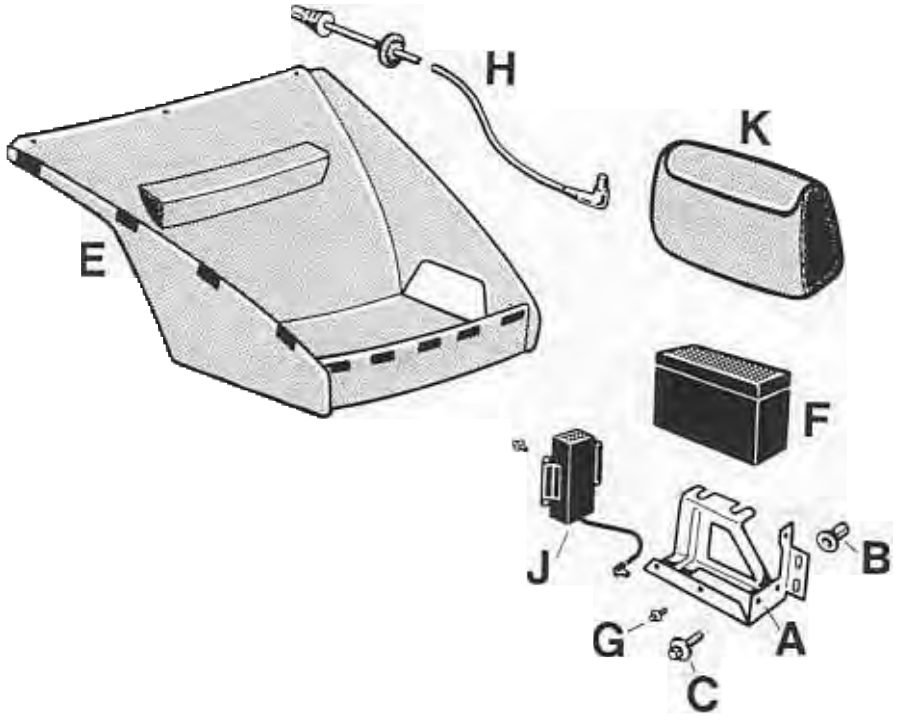

1154 - 91

A = Bracket for CD changer

B = Pop rivet nut M 6/0.9 - 3

C = Combination screw M 6 x 16

E = Front compartment carpet, modified for CD changer

F = CD changer

G = Combination screw M 4 x 8

H = Interface/radio connecting wire

J = Interface

K = Trim for CD changer

Printed in Germany - 12, 1995

Retrofitting of a CD changer

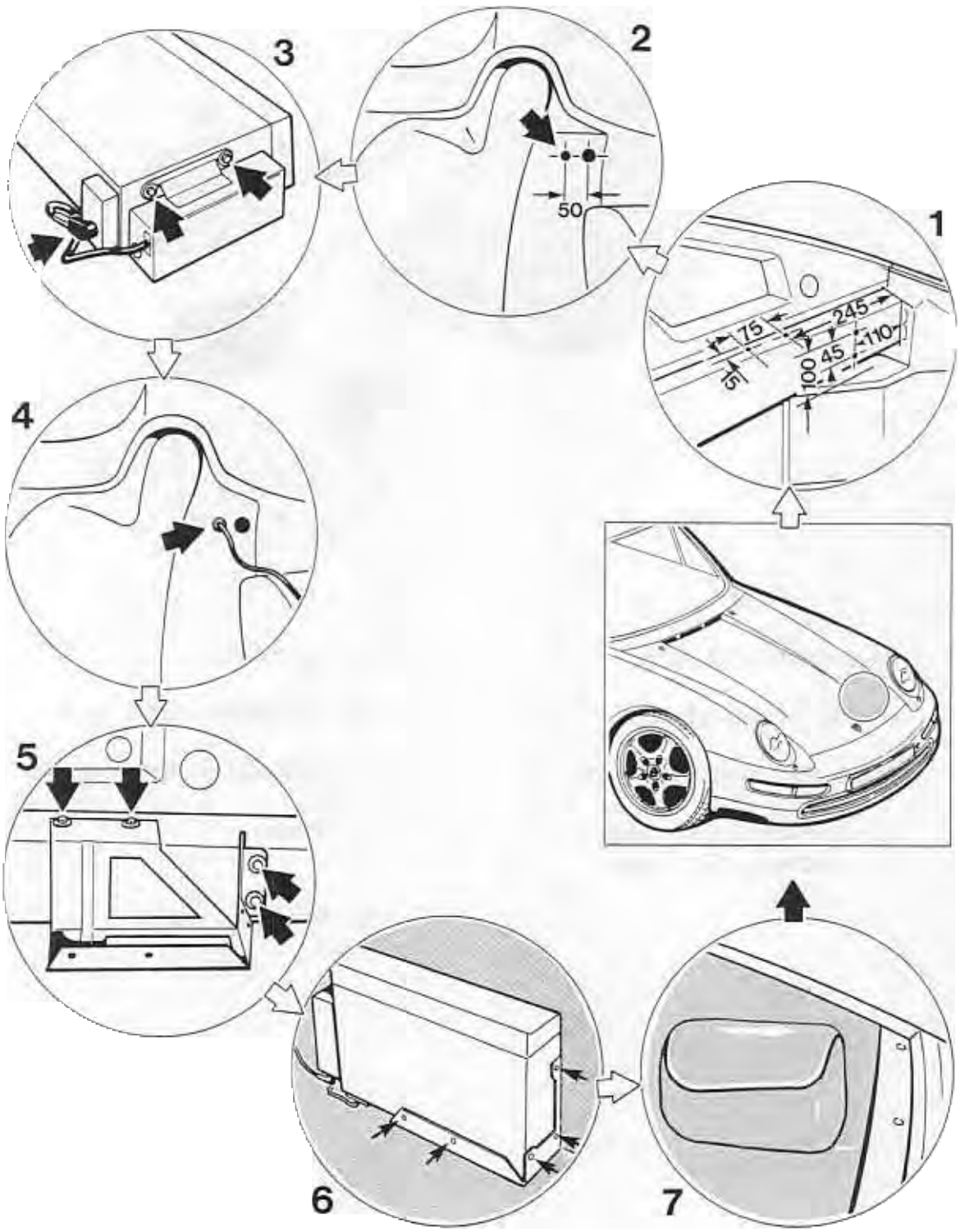

Retrofitting a CD changer

Remove front compartment carpet, spare tire, protective cover, fuel tank and battery!

No.	Operation	Instructions
1	Insert pop rivet nuts for attachment of the CD changer bracket into side member	Scribe attachment points for CD changer bracket on left-hand front end of side member. Using a 9.5 mm dia. drill bit, drill holes into side member according to scribe marks. Insert M 6 pop rivet nuts into side member and rivet in place using a pop rivet nut gun,
2	Drill 20 mm dia. hole for routing of connecting wire	Scribe hole for routing of CD changer/radio connecting wire on bulkhead and drill to 20 mm dia.
3	Finish assembly of CD changer	Remove transport locks from CD changer. Cover open holes on CD changer using the self-adhesive sheets supplied. Fit interface to CD changer using M 4 x 8 combination screws (4 pc.). Connect interface/CD changer wiring.
4	Insert connecting wire	Route connecting wire across hole in bulkhead, put grommet into place and insert connecting wire into radio. Tie connecting wire to wiring harness along side member.
	Install and connect battery	Enter radio code, correct clock setting and carry out system adaptation.
5	Fit bracket for CD changer	Fit CD changer bracket to side member, using M 6 x 16 combination screws (4 pc.).
6	Fit CD changer	Plug connecting wire into interface (CD changer). Fit CD changer to CD changer bracket, using M 4 x 8 combination screws (5 pc.).
	Check CD changer operation	
7	Fit spare tire, modified front compartment carpet and trim for CD changer	

Printed in Germany - 12, 1995

92 00 19 Removing and installing windshield wiper system

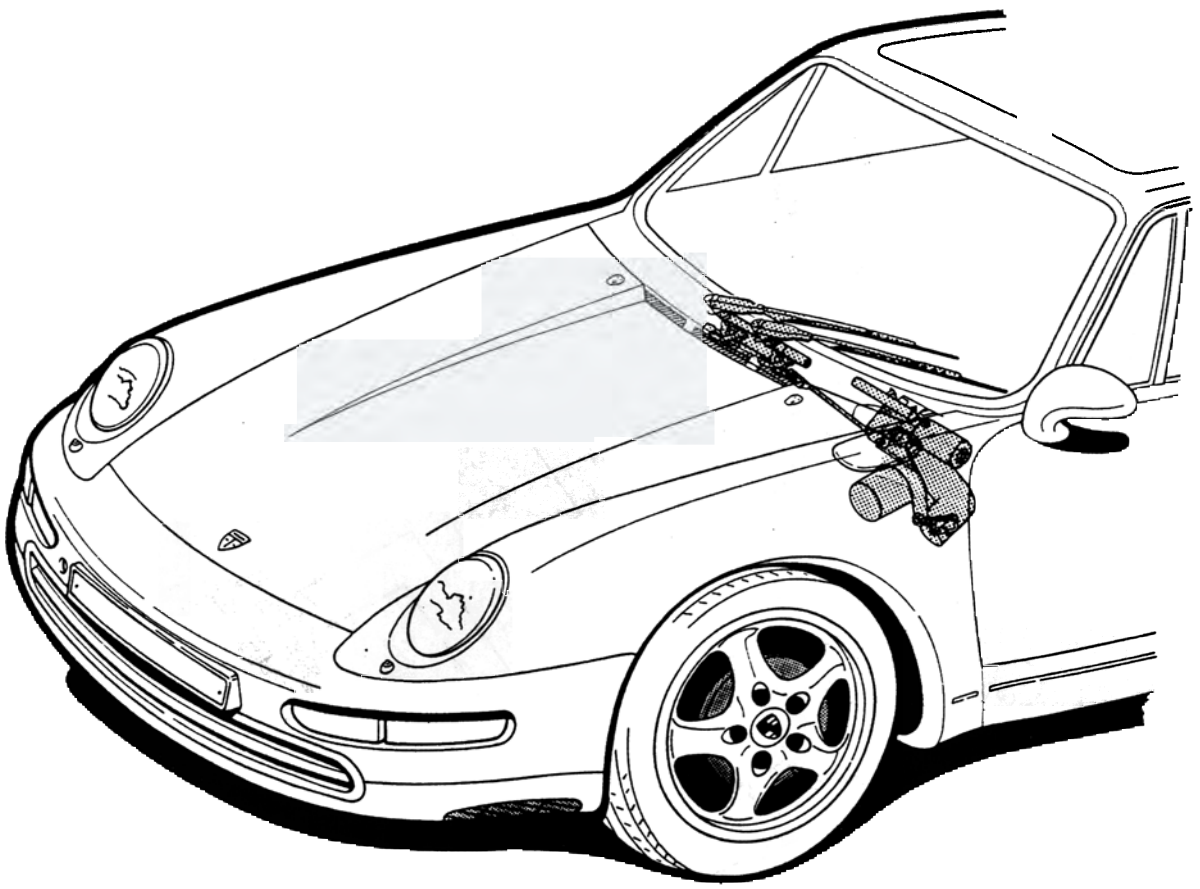

1625 - 92

92 00 19 Removing and installing windshield wiper system

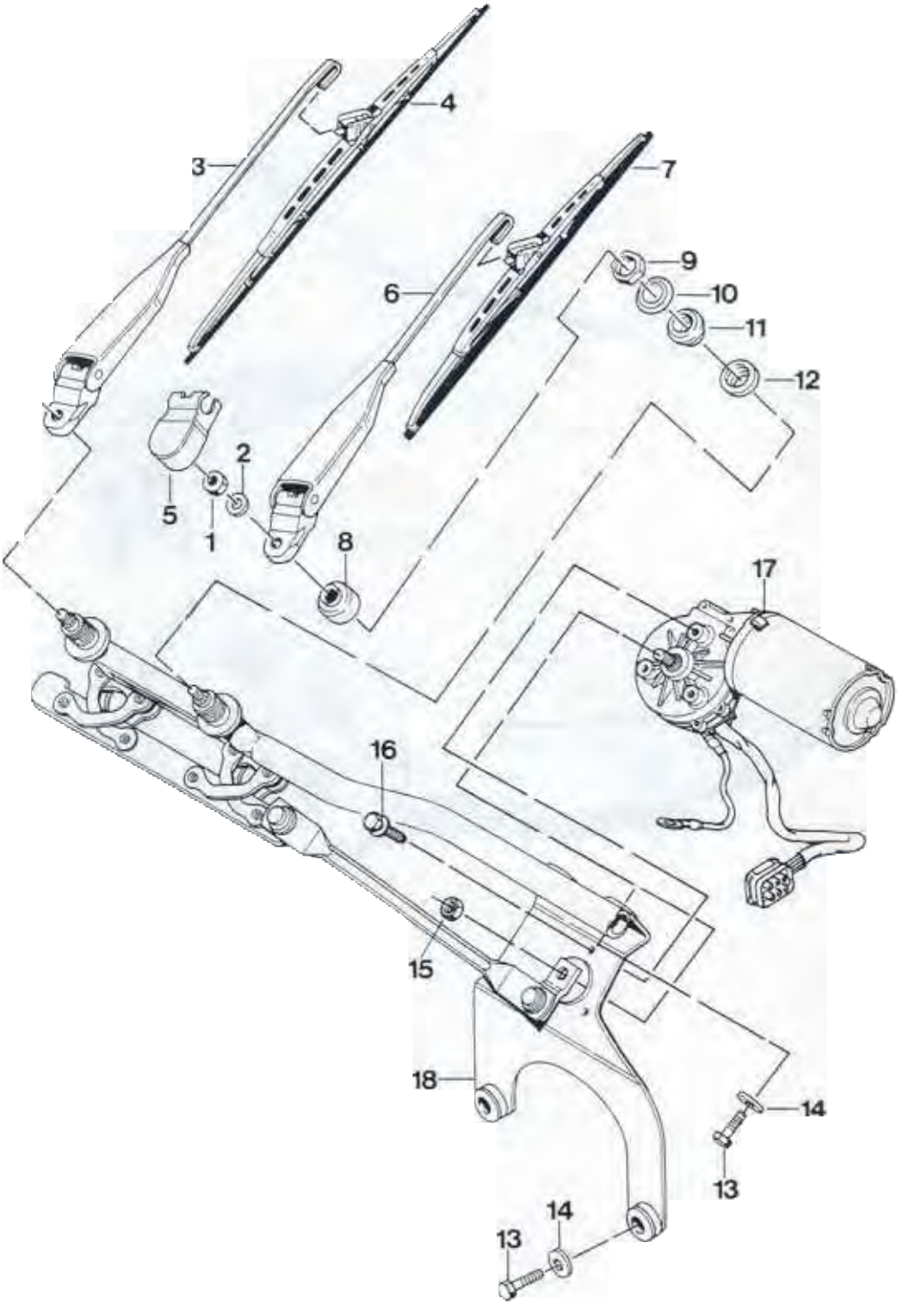

No.	Designation	Qty.	Note: Removal	Installation
1	Hexagon head nut M 8	2		M_A = 14 - 16 Nm (10 - 12 ftlb.)
2	Washer	2		
3	Wiper arm right-hand	1		
4	Wiper blade right-hand	1		
5	Cap	2		
6	Wiper arm left-hand	1		
7	Wiper blade left-hand	1		
8	Cap	2		
9	Hexagon head nut M 18 x 1	2		M_A = 10 +1 Nm (7 + 0.7 ftlb.)
10	Flange washer	2		
11	Rubber bushing	2		
12	Rubber bushing	2		
13	Hexagon head screw M 6 x 22	4		M_A = 10 Nm (7 ftlb..)
14	Washer A 6.4	4		
15	Nut	1		
16	Hexagon head screw	3		M_A = 11 Nm (8 ftlb.)
17	Wiper motor	1		
18	Crank gear	1		

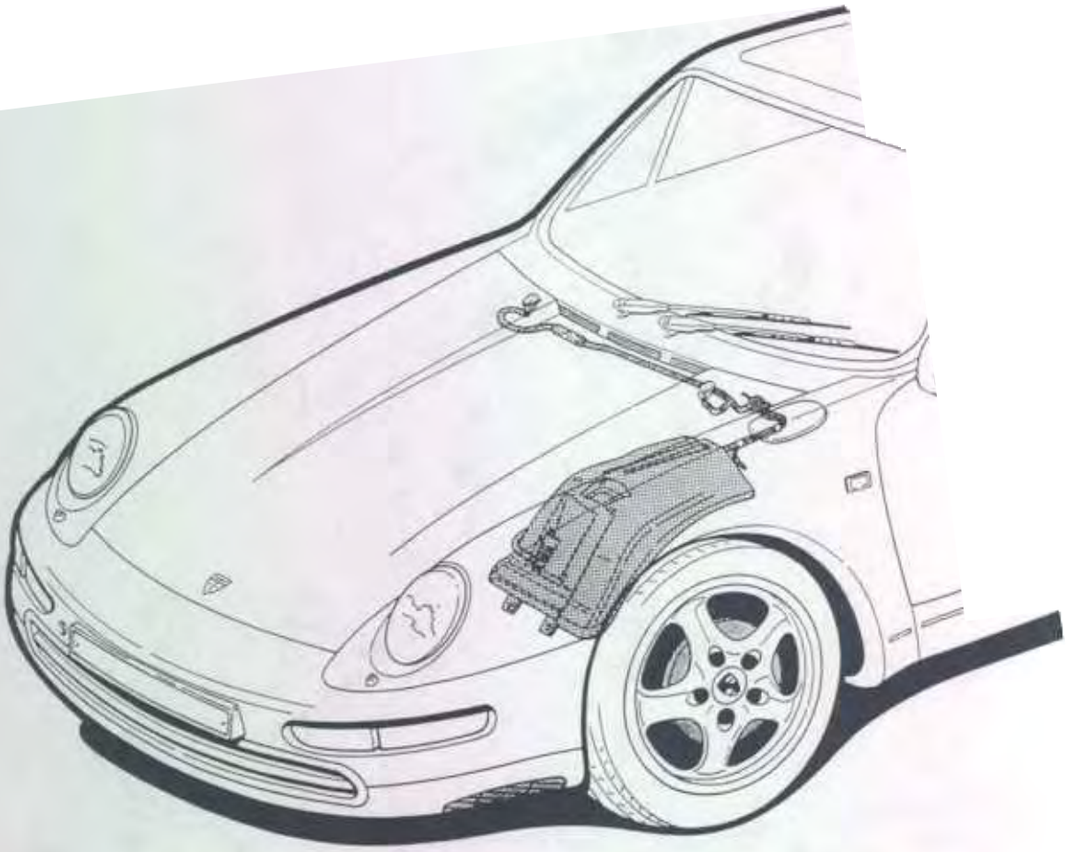

92 00 19 Removing and installing windshield wiper system

92 00 19 Removing and installing windshield washer

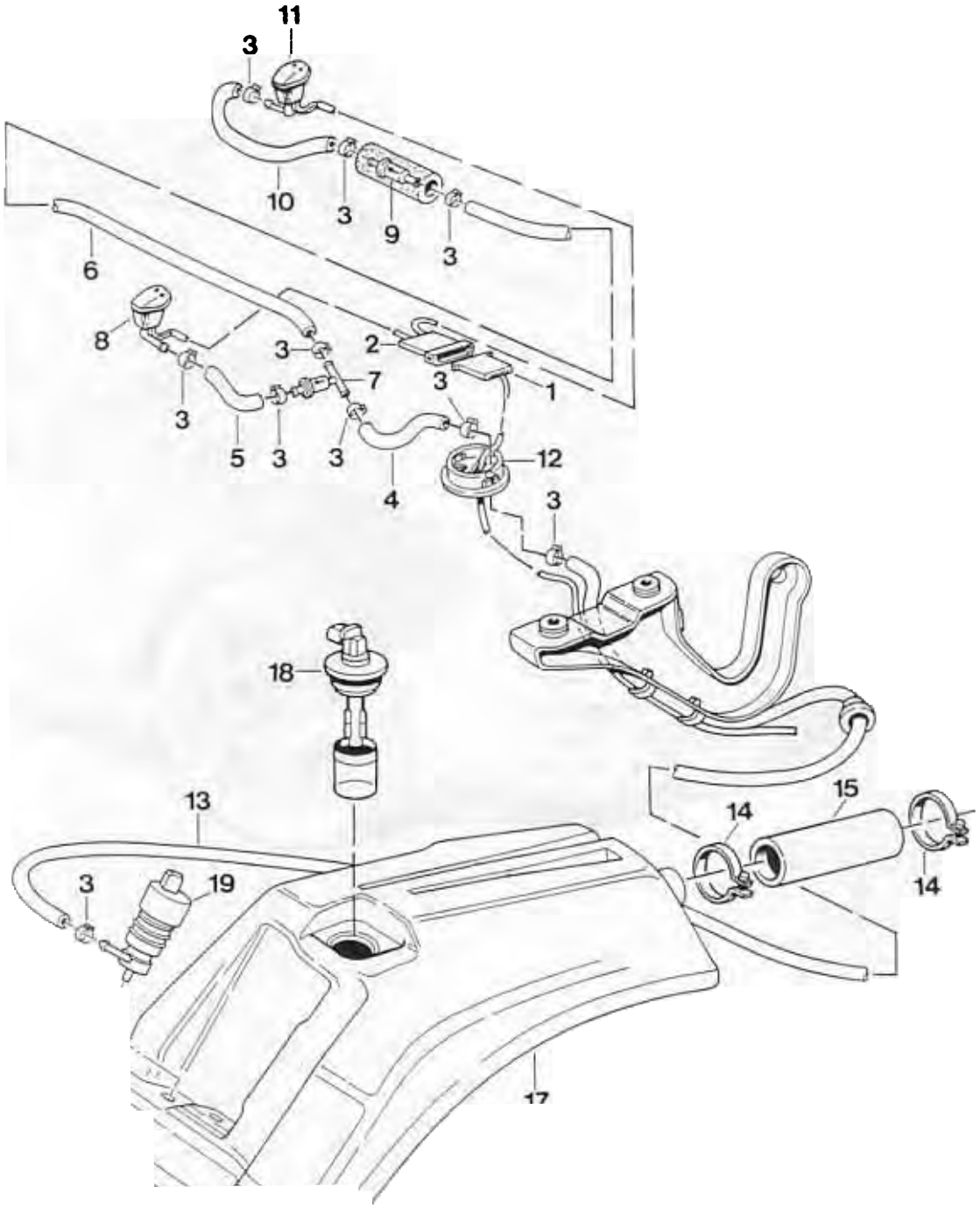

No.	Designation	Qty.	Note: Removal	Installation
1	Passenger wiring harness connector	1		
2	Connector housing for heated spray nozzle	1	Disengage wires with commercially available extracting tool	
3	Ear clamp	10		Replace
4	Hose	1		
5	Hose	1		
6	Hose	1		
7	Valve	1		
8	Spray nozzle left-hand	1	Push back and disengage lug	
9	Valve	1		
10	Hose	1		
11	Nozzle right-hand	1	Refer to No. 8	
12	Hose clamp	1		
13	Hose	1		
14	Hose clamp	2		
15	Hose	1		
16	Screw	2		
17	Water tank	1		
18	Sender for fluid level indicator	1		
19	Pump for windshield washer system	1		
20	Gasket	1		

92 00 19 Removing and installing headlight washer system

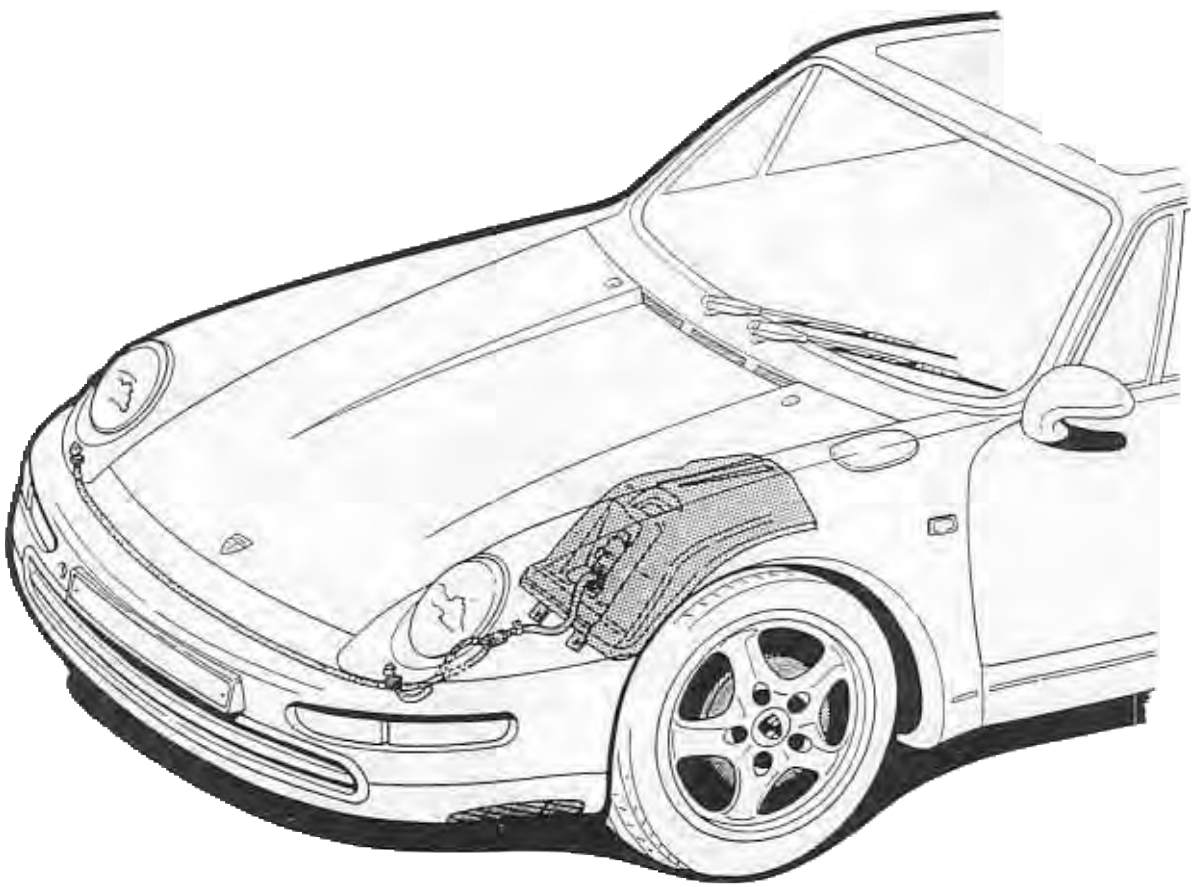

1627 - 92

92 00 Rem and insta ng headlight washer system

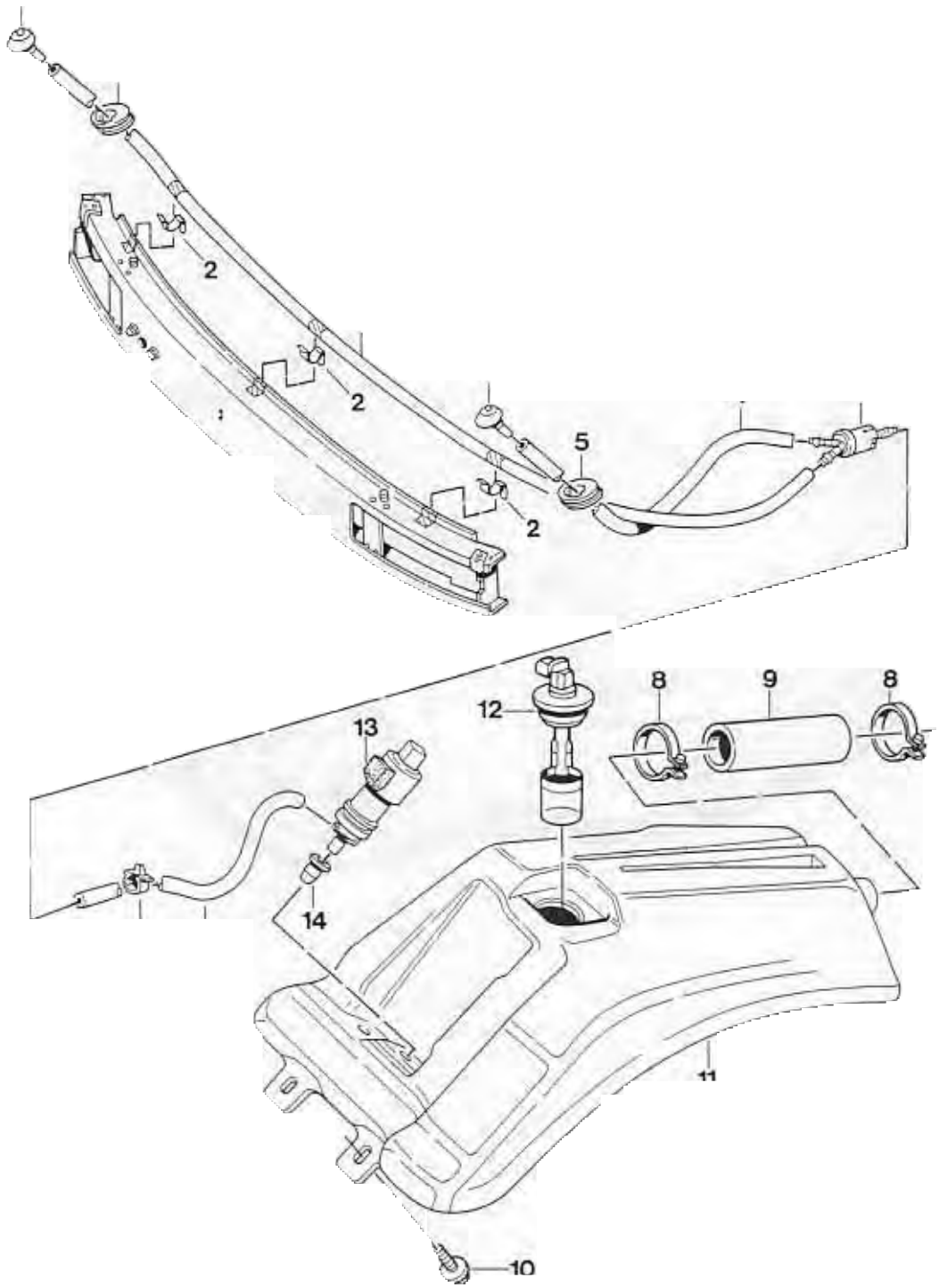

No.	Designation	Qty.	Note: Removal	Installation
1	Spray nozzle	2		
2	Clamp	3		
3	Hose	1		
4	Hose	2		
5	Grommet	2		
6	Bracket	4		
7	Valve	1		
8	Refer to p. 92 - 7 No. 14			
9	Refer to p. 92 - 7 No. 15			
10	Refer to p. 92 - 7 No. 16			
11	Refer to p. 92 - 7 No. 17			
12	Refer to p. 92 - 7 No. 18			
13	Pump for headlight washer system			
14	Gasket			

92 00 19 Removing and installing rear window wiper

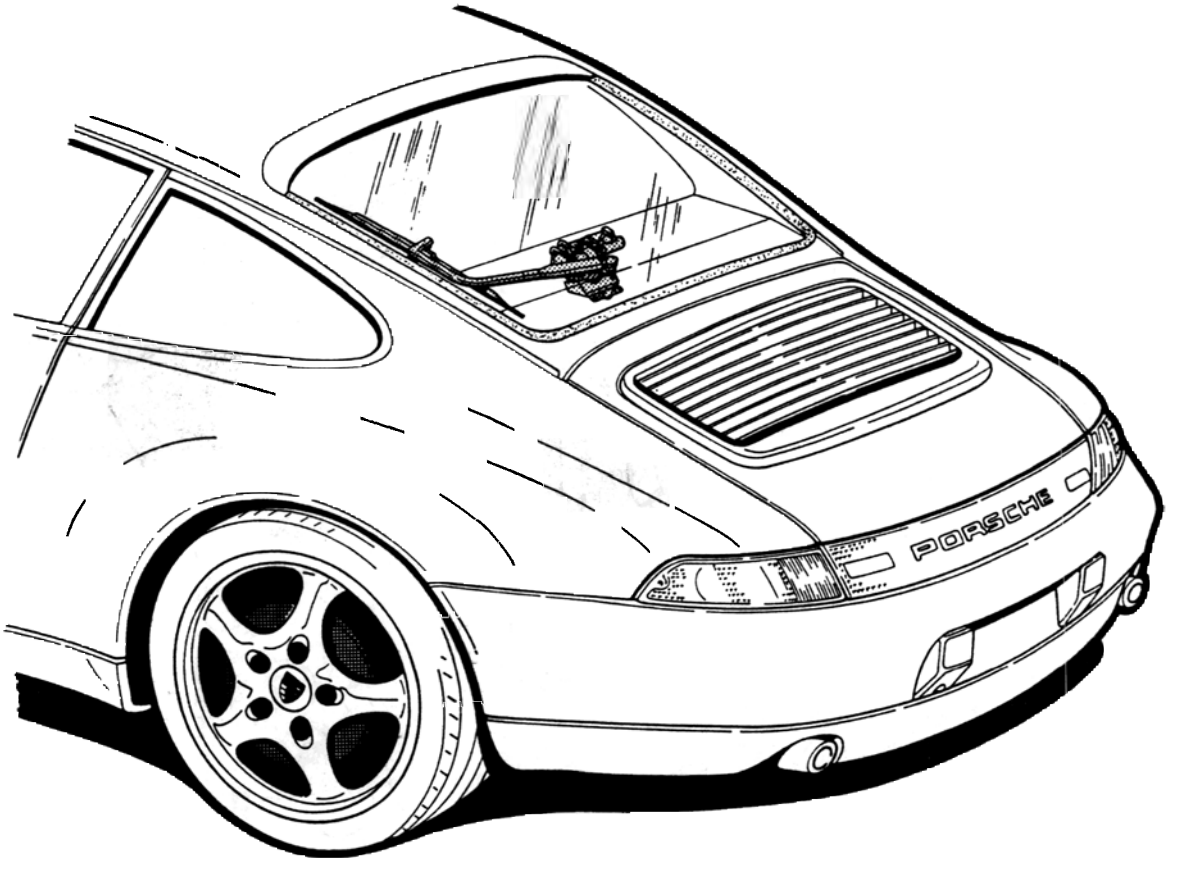

1628 - 92

92 00 19 Removing and installing rear window wiper

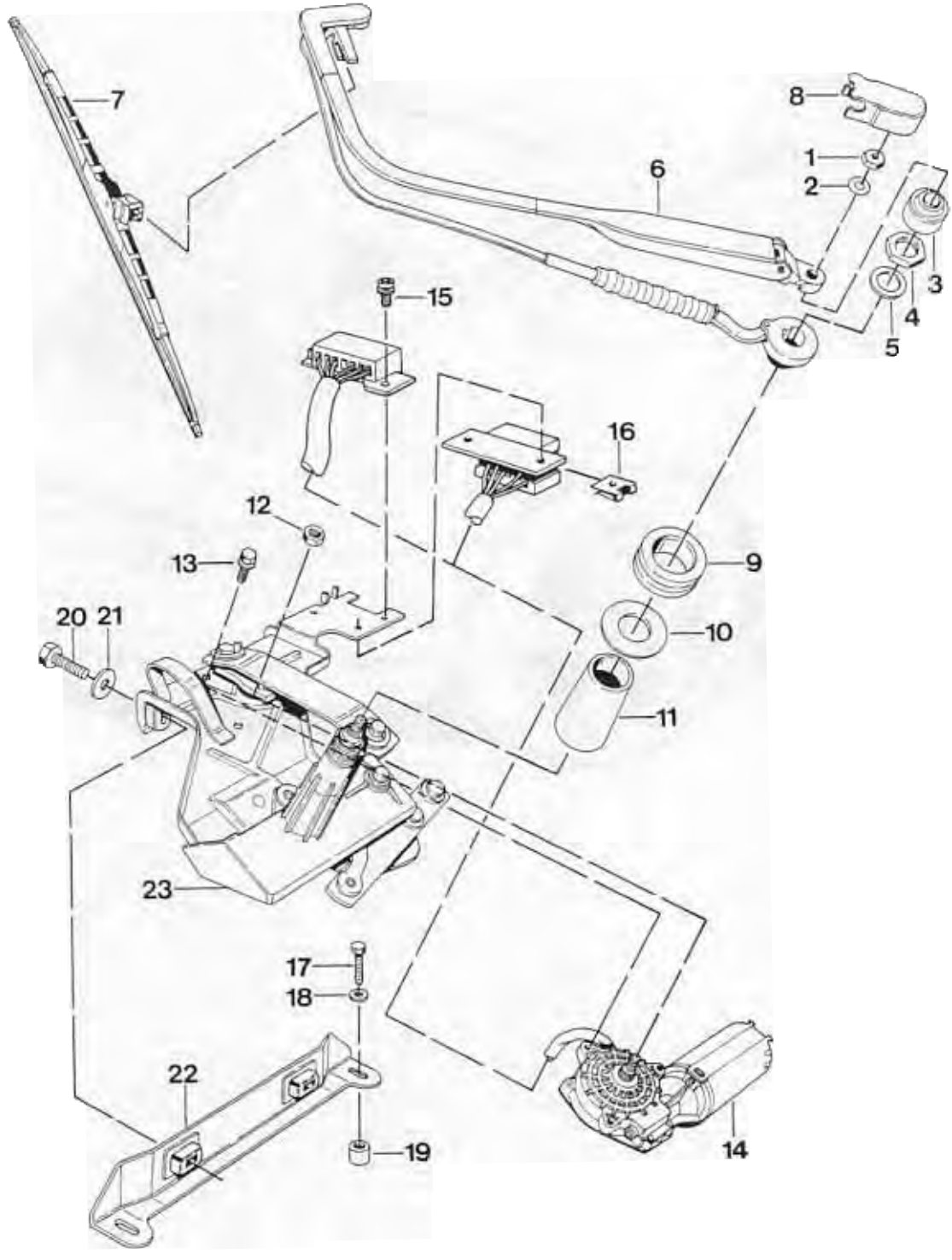

No.	Designation	Qty.	Note: Removal	Installation
1	Nut M 8	1		M_A = 20 - 25 Nm (15 - 18 ftlb.)
2	Washer	1		
3	Cap	1		
4	Nut M 16 x 1	1		M_A = 14 - 16 Nm (10 - 12 ftlb.)
5	Washer	1		
6	Wiper arm	1		
7	Wiper blade	1		
8	Cap	1		
9	Rubber bushing	1		
10	Washer	1		
11	Cover	1		
12	Nut	1		M_A = 10 Nm (7 ftlb.)
13	Screw	3		M_A = 11 - 12 Nm (8 - 9 ftlb.)
14	Wiper motor	1		
15	Self-tapping screw	3		
16	Sheetmetal nut	2		
17	Screw	2		M_A = 5 Nm (4 ftlb.)
18	Washer	2		
19	Bushing	2		
20	Screw	2		M_A = 8 - 10 Nm (6 - 7 ftlb.)
21	Washer	2		
22	Retaining bracket	1		
23	Assembly frame	1		

92 15 19 Removing and installing wiper motor (with A/C system)

Vehicles with air conditioning

Removal

1. Disconnect battery and cover battery or terminals.

Note

Follow safety precautions for work on vehicles with airbags.

2. Remove steering wheel and steering column panel.

3. Remove tachometer and large and small instrument cluster.

4. Remove air guide. Disconnect six-pin connector from wiper motor.

5. Unhook left pneumatic spring of luggage compartment lid and support luggage compartment lid.

6. Extract refrigerant with service equipment.

7. Remove cover of heater / A/C unit (old type with two screws and washers: new type with clamping spring).

8. Disconnect central electrical system.

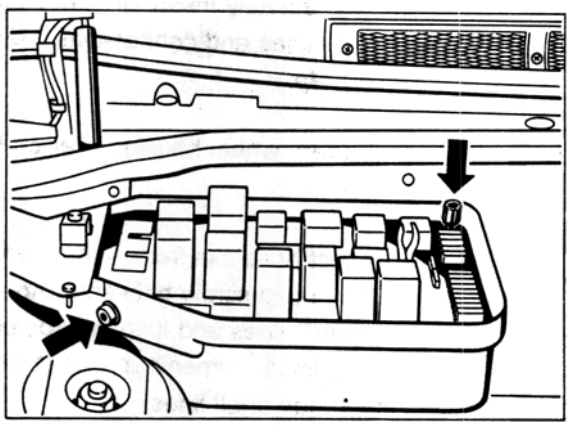

240-87

9. Remove wire harness cover.



241-87

10. Unplug connector from lid of fan housing and lay central electrical system on fender (the fender must be protected by a cover).

11. Unplug cable connector from final stage of fan.

12. Remove firewall.

13. Disconnect A/C lines from expansion valve. Immediately insert air-tight plugs in ends of all lines and connections. Loosen retaining clip.

14. Remove rear wheel housing liner on front left fender.

15. Disconnect hose clip from fluid reservoir. Undo mounting screw between wheel housing A/C lines and luggage compartment A/C lines. Immediately insert air-tight plugs in ends of all lines.

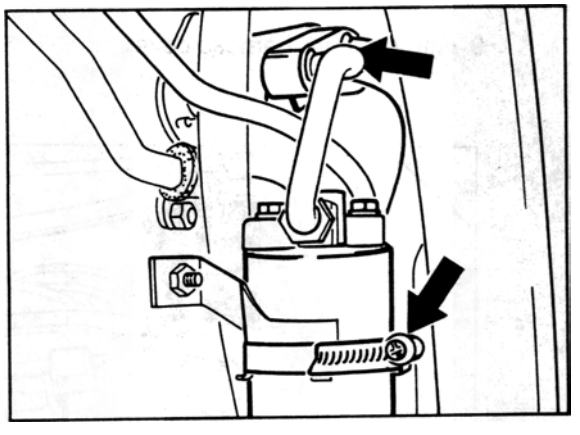

1897-87

16. Move A/C lines to side from wiper mount.

17. Release mounting nut of linkage, holding a 21 mm open-end wrench against linkage.

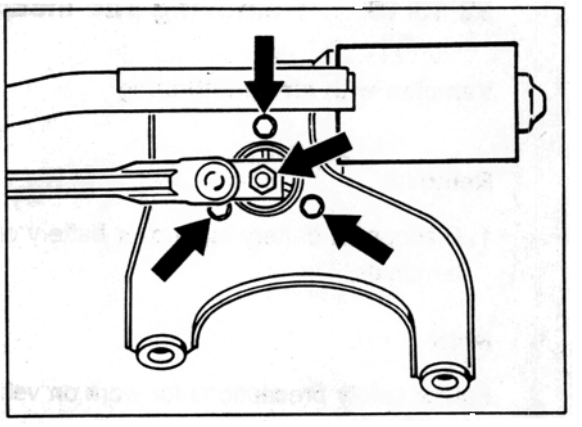

2072-92

Tightening torque: 22 ± 2 Nm (16 ± 1.5 ftlb.

18. Release mounting screws. Tightening torque: 11 Nm (8 ftlb.).

19. Remove wiper motor through installation opening of tachometer.

Installation

Note

Installation of the wiper motor is much easier if the motor is fixed in position with a stud bolt (sawn-off screw) and a nut. After fixing the motor, fasten it in place with 2 screws. Then unscrew the nut and stud bolt and insert the third screw.

1. Connect battery and switch wiper motor on and off (park position).

2. Install linkage. Cable and linkage must form a straight line.

3. Switch on wiper motor and check wiper positions.

4. **Disconnect battery again** and install the parts that you have removed. Use new O-rings and wet them with refrigerant oil.

5. Replace the two self-locking screws of the airbag unit in the steering wheel.

Note

To remove the crank mechanism of the wiper, the heater / A/C unit must be removed.

92 15 19 Removing and installing wiper motor (without A/C system)

Vehicles without air conditioning

Removal

1. Disconnect battery and cover battery or terminals.

Note

Follow safety precautions for work on vehicles with airbags.

2. Remove steering wheel and steering column panel.

3. Remove tachometer and large and small instrument cluster.

4. Remove air guide. Disconnect six-pin connector from wiper motor.

5. Unhook left pneumatic spring of luggage compartment lid and support luggage compartment lid.

6. Remove cover of heater / A/C unit (old type with two screws and washers; new type with clamping spring).

7. Undo mounting nut of linkage, holding a 21 mm open-end wrench against linkage.

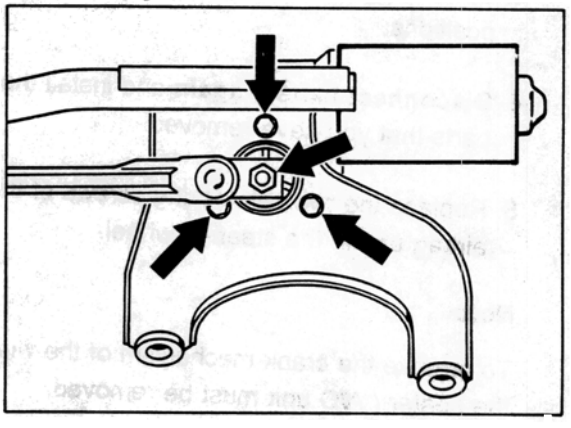

2072-92

Tightening torque: 22 ± 2 Nm (16 ± 1.5 ftlb.)

8. Release mounting screws. Tightening torque: 11 Nm (8 ftlb.).

9. Remove wiper motor through installation opening of tachometer.

Installation

Note

Installation of the wiper motor is much easier if the motor is fixed in position with a stud bolt (sawn-off screw) and a nut. After fixing the motor, fasten it in place with 2 screws. Then unscrew the nut and stud bolt and insert the third screw.

1. Connect battery and switch wiper motor on and off (park position).

2. Install linkage. Cable and linkage must form a straight line.

3. Switch on wiper motor and check wiper positions.

4. **Disconnect battery again** and install the parts that you have removed.

5. Replace the two self-locking screws of the airbag unit in the steering wheel.

Note

To remove the crank mechanism of the wiper, the heater / A/C unit must be removed.

94 15 19 Removing and installing main headlight mountings

Removal

1. Unlock the main headlight in the luggage compartment and remove main headlight. Unclip safely clip in mounting using a screwdriver and remove lock lever with rubber sleeve.

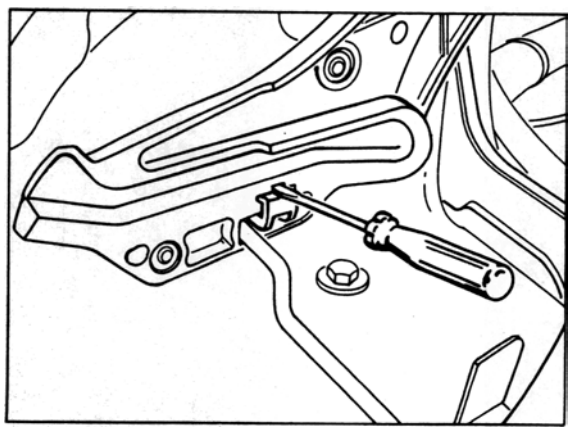

1885-94

2. **Only loosen** headlight mounting through openings in inside of luggage compartment using a 5 mm Allen socket wrench. Pull mounting up slightly and remove it.

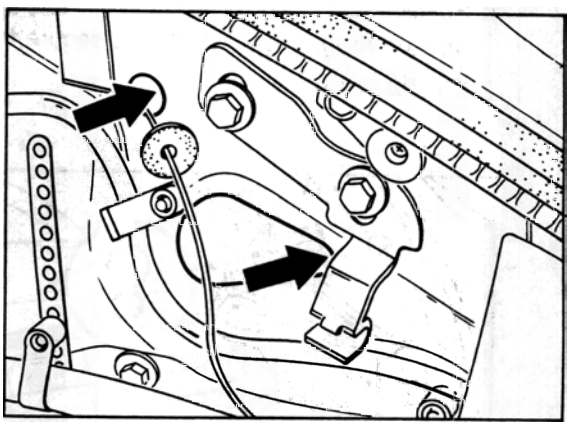

1886-94

3. Remove lower part of front spoiler. **Only loosen** the M 6 hexagon head screws from below and take out the mounting. Unhook the electric connector. Loosen headlight rail from below and remove it.

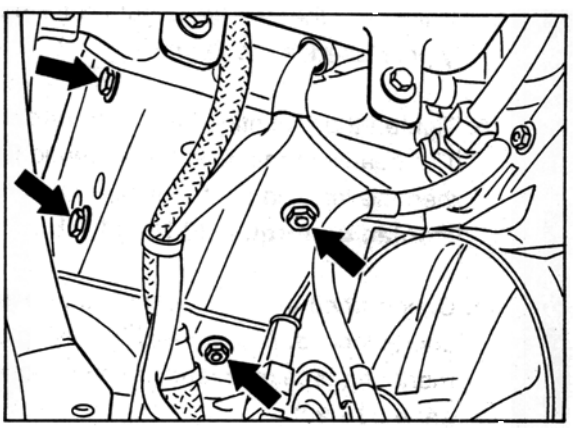

1887-94

Installation

1. Position, but do not tighten, the headlight rail and mountings. Install and secure the locking lever.

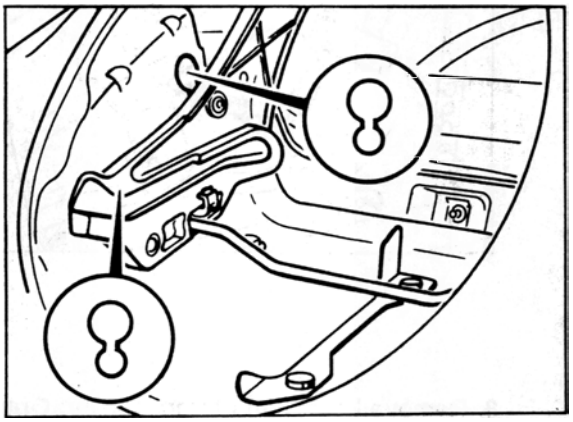

1888-94

2. Install headlight and lock it in position with the locking lever. A second person must press the headlight firmly into the fender. Make sure that the headlight seal is correctly positioned in the fender.

3. Tighten the mountings in the correct order! The headlight rail must be tightened first, then the left and right mountings.
Tightening torque: 10 Nm (7 ftlb.)

4. Check whether the headlight can be locked and unlocked. Adjust headlight using adjustment unit (see maintenance operations, page 03 - 20).

2. Flip over locking clamp on headlight hou: ing and take off cover with fitted igniter. Screw out electrical connector from D2S lamp (quarter-turn socket fastener).

3. Carefully bend tab washers (2 ea.) open at retaining ring. Press retaining ring down and turn left (quarter-turn socket fastener). Take out retaining ring and D2S lamp.

2. Place headlight housing into fender a lock housing in place. Engage lockin

3. Check operation and adjustment of h lights (refer to maintenance operatior

Troubleshooting

Note

If the dipped beam (Litronic headlight) is defective, only the individual components can be replaced. The wires and control units are connected to **high voltage**. Do not use **any measuring device** to measure the voltage of wires or control units.

Removing and installing gas dischar lamp (D2S)

See page 94 - 3

Removing and installing control unit

1. Loosen fastening screw on control u bracket and remove control unit.

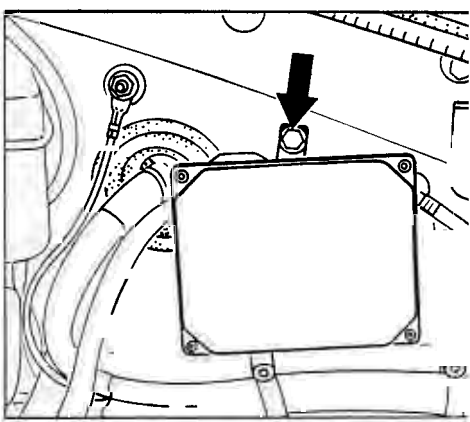

2. Disconnect electric plug connection and detach bracket from control unit.

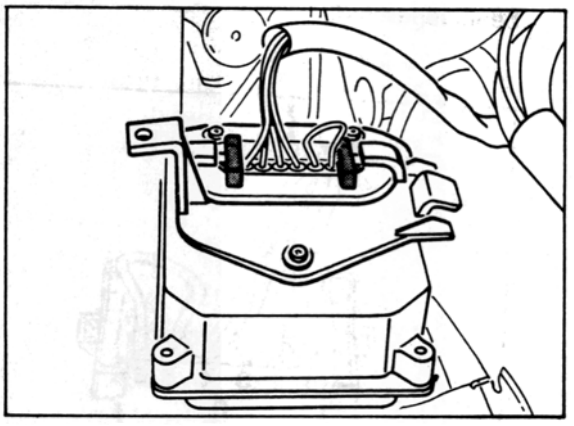

2232-94

3. Install new control unit and check operation.

Removing and installing trigger device

Note

To check operation, the trigger unit of the second headlight can be installed.

1. Remove headlight housing. Fold back retaining bracket on headlight housing and remove lid with integrated trigger device.

2. Unscrew electric plug connection on D2S lamp (bajonet catch) and separate plug connection on trigger device.

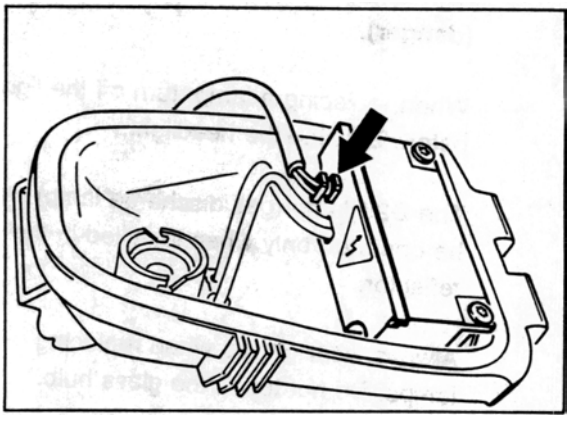

2230-94

3. Install lid with integrated trigger device of second headlight and check operation.

92 00 19 Removing and installing rear window wiper system

Removal

1. Disconnect and remove rear wiper arm. Take off cap and unscrew M 16 x 1 fastening nut. Remove plastic bushing. The rubber seal must remain in the rear window. **Do not** remove it.

2. Remove rear wall trim panel (4 screws) and cover for rear wiper motor (2 screws). Remove the sun blind motor in front of the wiper motor and place it on one side.

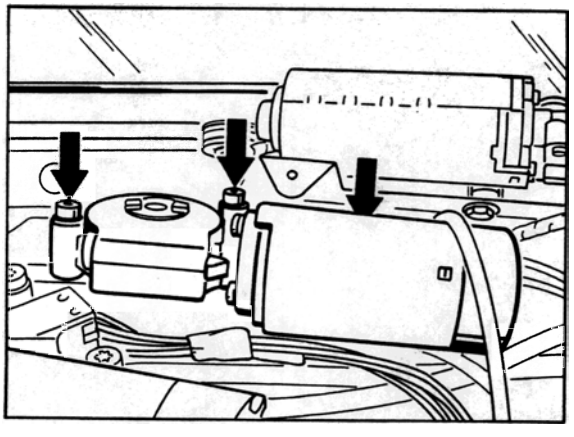

2251 - 92

3. Disconnect electrical connector from wiper motor. Unscrew and remove fastening screws (2 screws) of wiper system.

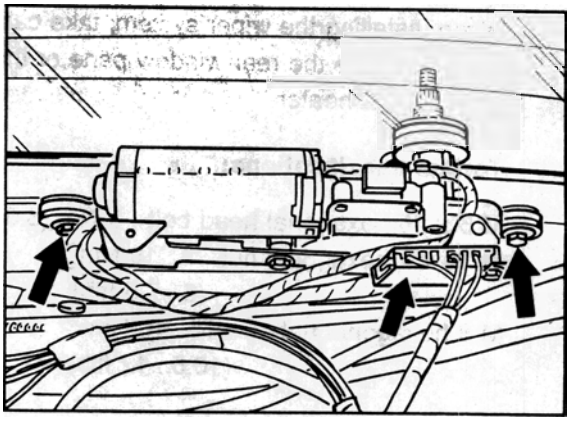

2252-92

4. Swing the wiper system up about 90 ° (the wiper motor points upwards) and carefully take it down out of the rear window (twisting it out).

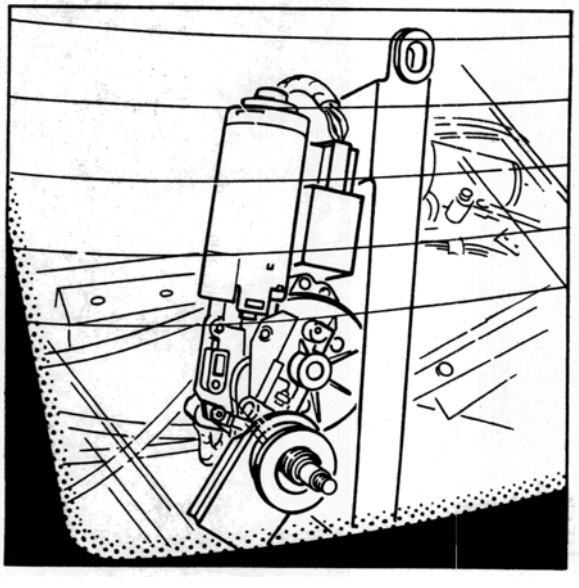

2253-92

Installation

When installing the wiper system, take care not to damage the rear window pane or the rear window heater.

Torque specifications:

M 6 x 25 hexagonal head bolt	9 Nm (6.6 ftlb)
M 16 x 1 hexagonal nut	8...10 Nm (6...7.5 ftlb)
M 8 hexagonal nut	14...16 Nm (10.5...12 ftlb)

Repair Manual

911 Carrera
(993)

Volume VII:
Wiring diagrams

Dr. Ing. h.c. F. Porsche Aktiengesellschaft

Volume I:	**Overall vehicle – General**	**0**
General	Maintenance, diagnosis	03
Engine		
	Engine	**1**
	Engine – Crankcase, mounting	10
	Engine – Crankshaft, pistons	13
	Engine – Cylinder head, valve drive	15
	Engine – Lubrication	17
	Engine – Cooling	19
	Fuel, exhaust system, engine electrical system	**2**
	Fuel supply, control	20
	Exhaust system – Turbocharging	21
	Fuel system, electronic injection	24
	Fuel system, K-Jetronic	25
	Exhaust system	26
	Starter, power supply, GRA	27
	Ignition system	28
Volume II:	**Transmission**	**3**
Transmission	Clutch, control	30
Manual transmission	Manual transmission – Controls, case	34
	Manual transmission – Gears, shafts, inner operation	35
	Final drive, differential, differential lock	39
Volume III:	**Transmission**	**3**
Transmission	Automatic transmission – Torque converter	32
Automatic	Automatic transmission – Controls, case	37
transmission	Automatic transmission – Gears, control	38
	Final drive, differential, differential lock	39
Volume IV:	**Chassis**	**4**
Chassis	Front wheel suspension, drive shaft	40
	Rear wheel suspension, drive shaft	42
	Wheels, tires, alignment	44
	Anti-Lock System (ABS)	45
	Brakes – Mechanical	46
	Brakes – Hydraulics, regulator, booster	47
	Steering	48

Volume V:	**Body**	**5**
Body	Body front section	50
	Body center section, roof, frame	51
	Body rear section	53
	Hoods, lids	55
	Front doors, Central Locking System	57
	Exterior body equipment	**6**
	Sunroof	60
	Soft top, hardtop	61
	Bumpers	63
	Glasses, window control	64
	Exterior equipment	66
	Interior equipment, passenger protection	68
	Interior body equipment	**7**
	Trim, insulation	70
	Seat frames	72
	Seat upholstery, covers	74
Volume VI:	**Air conditioning**	**8**
Air conditioning	Heater	80
Vehicle electrics	Ventilation	85
	Air conditioning	87
	Auxiliary air conditioning system	88
	Electrical system	**9**
	Instruments, alarm	90
	Radio, telephone, on-board computer	91
	Windshield wipers and washer	92
	Exterior lights, lamps, switches	94
	Interior lights, lamps, switches	96
Volume VII:	**Electrical system**	**9**
Wiring diagrams	Wiring	97
Volume VIII:	**Diagnosis**	**D**
Diagnosis	Self-diagnosis	03
	DME Diagnosis	24
	Tiptronic Diagnosis	37
	PDAS Diagnosis	39
	ABS Diagnosis	45
	Airbag Diagnosis	68
	Heater Diagnosis	80
	Alarm Diagnosis	90

Preface

Structure

The "Technical Literture" for the "911 Carrera (993)" model is basically structured as before, i.e. the structure follows the familiar repair groups.

A new feature is that the structure includes the main groups **0 to 9** and the main group **D**.

Main groups:	0	Complete vehicle – General
	1	Engine
	2	Fuel, exhaust, engine electrical system
	3	Transmission
	4	Chassis
	5	Body
	6	Body equipment, outside
	7	Body equipment, interior
	8	Air conditioning
	9	Electrical system
	D	Diagnosis

Layout

The layout in the below items remains unchanged throughout the repair manual

1. Table of tightening torques
2. Special tools required
3. Exploded views
4. Legends for the exploded views
5. Assembly notes / use of special tools

As a new feature, however, the former item 6 (Repair group diagnosis) is no longer filed in the volume corresponding to the respective repair group. The **Diagnosis test plans / diagnosis procedures** have been combined in a **separate Diagnosis volume** broken down according to the main groups 0 to 9.

Another new feature is that the contents of the "Service Information Technik" are indicated in the Repair Manual. This brochure concentrates on a description of the design and function of components and of the new features introduced for a particular model year.

Service Number

All major repair procedures and repair descriptions are identified by a two- or four-digit **Service Number** completed by two additional digits to identify the work that corresponds to the first six digits of the working position number in the Working Times and Damage Catalog.

Example: 30 37 37 Dismantling and assembling clutch control shaft

Explanation: **30** **37** **37** 50 (full working position number)

Repair group
here: Clutch, control

Component designation
here: Clutch control shaft

Activity
here: Dismantling and assembling

Index
here: Removed

Presentation in the various documents

30 37 37 50	Working position no. from **Working Times and Damage Catalog**, consisting of repair group, component designation, activity and index
30 37 37	Six-digit number in **Repair Manual**, consisting of repair group, component designation and activity
30 37	Service number in **Service Information**, consisting of repair group and component designation

Goal

The introduction of a service number in the "technical literature" is intended to facilitate standardization and positive identification to allow direct cross-referencing among the various documents. This is of particular importance with regard to the use of electronic media.

VII Wiring Diagrams

The Repair Manual of the 911 Carrera (993) also includes the 911 Carrera 4 manual (993 four-wheel drive). The 911 Carrera (993) is the basic model covered by the repair operations described in this Manual. "911 Carrera (993)" is also indicated in the header of each page.

Descriptions of repair operations that deviate for the 911 Carrera 4 will be included after the respective 911 Carrera section. The repair descriptions of both models are separated by a cover page. All pages included after the cover page (separation sheet) have the "911 Carrera 4" heading. To facilitate distinction, the page numbering will start with 100.

9 Electrical System

97 Wiring

97 90	Support, left-hand engine compartment side	97 - 01
97 97	Support, right-hand engine compartment side	97 - 02
97 09	Passenger compartment wiring harness	97 - 03
97 09 41	Repairing the passenger compartment wiring harness	97 - 05
97 16 41	Repairing the front-end wiring harness	97 - 07
97 09	Spare part - passenger compartment wire harness for Model '95	97 - 011
97 50 41	Repairing wire harness no. 173 (DME)	97 - 013
97 52	Engine wire harness	97 - 014
97 52	Spare part - passenger compartment wire harness for Model '96	97 - 015
97 09	Spare part - passenger compartment wire harness Model '96	97 - 017
97 09	Spare part - passenger compartment wire harness for Model '97	97 - 019
97	Wiring diagram 911 Carrera (993) model '94	97 - 1
97	Wiring diagram 911 Carrera (993) model '95	97 - 37
97	Wiring diagram 911 Carrera (993) model '96	97 - 77
97	Wiring diagram 911 Carrera (993) model '97/98	97 - 117

Printed in Germany - 22, 1997

Survey of contents of Service Information Technik '95

The Service Information gives a detailed description of the technical features of the new 911 Carrera.

	Rep. Gr.	Page
Engine		
General		1 - 1
Engine cross-sections	10	1 - 4
Full-load curve		1 - 6
Belt pulley	13	1 - 8
Pistons	13	1 - 10
Hydraulic valve lash adjuster	15	1 - 16
Setting the timing	15	1 - 18
USA - auxiliary air pump		1 - 19
Fuel and ignition systems		
General		2 - 1
DME - Schematic	24	2 - 2
Fuel - air flow	24	2 - 3
Exhaust gas flow	26	2 - 5
DME control unit 2.10.1	24	2 - 9
Mass air flow sensor	24	2 - 12
Throttle potentiometer	24	2 - 18
Ignition system	28	2 - 24
Plausibility test		2 - 28
Diagnosis		2 - 29
Auxiliary air pump	26	2 - 33
Power transmission		
Transmission	30	3 - 1
Clutch	30	3 - 2
Manual transmission	34	3 - 3
Transmission ratios		3 - 6
Gear set	35	3 - 8
Synchromesh	35	3 - 9
Final drive	39	3 - 13
Oil supply		3 - 15
Porsche Tiptronic	37	3 - 16
Modifications for the '95 model year		3 - 17

	Rep. Gr.	Page
Running gear		
General		4 - 1
Front axle	40	4 - 2
Steering	48	4 - 7
Rear axle	42	4 - 8
Elasto-kinematic toe correction	42	4 - 12
Coil springs (layout)	42	4 - 13
Wheels, tires	44	4 - 15
Suspension alignment	44	4 - 17
Brakes	47	4 - 20
Bleeding the brakes	47	4 - 23
ABS 5	45	4 - 24
Operation of the ABD	45	4 - 30
Diagnosis ABS/ABD	45	4 - 34
Body		
General		5 - 1
Constructional dimensions	50	5 - 4
Aerodynamics and air ducting	50	5 - 8
Body equipment		
Body equipment		6 - 1
Color scheme as of 1995 model year	60	6 - 1
Windows	64	6 - 8
Airbag system	68	6 - 14
Body - interior trim		
Body - interior trim	70	7 - 1
Seats	72	7 - 5
Heating, air conditioning, ventilation		
Particle filter	85	8 - 1
Air ducting	80	8 - 3
Heating - air conditioning unit	85	8 - 5
Heating - air conditioning unit	87	8 - 6
Series resistor of rear blower	80	8 - 9

Electrical system

	Rep. Gr.	Page
Instruments	90	9 - 1
Alarm system/central locking system	90	9 - 3
Heated rear window	64	9 - 6
Central Information System (Z I)	91	9 - 7
Radio "Alpine 7807"	91	9 - 10
Sound package, DSP-System	91	
Windshield wiper and washer system	92	
Headlights	94	
Front end light cluster	94	
Tail lights	94	
Engine compartment baseplate	97	
Wiring diagram		

Summary

Maintenance	0 - 1
Number ranges	0 - 4
Technical data	0 - 5

97 90 Support, left-hand engine compartment side

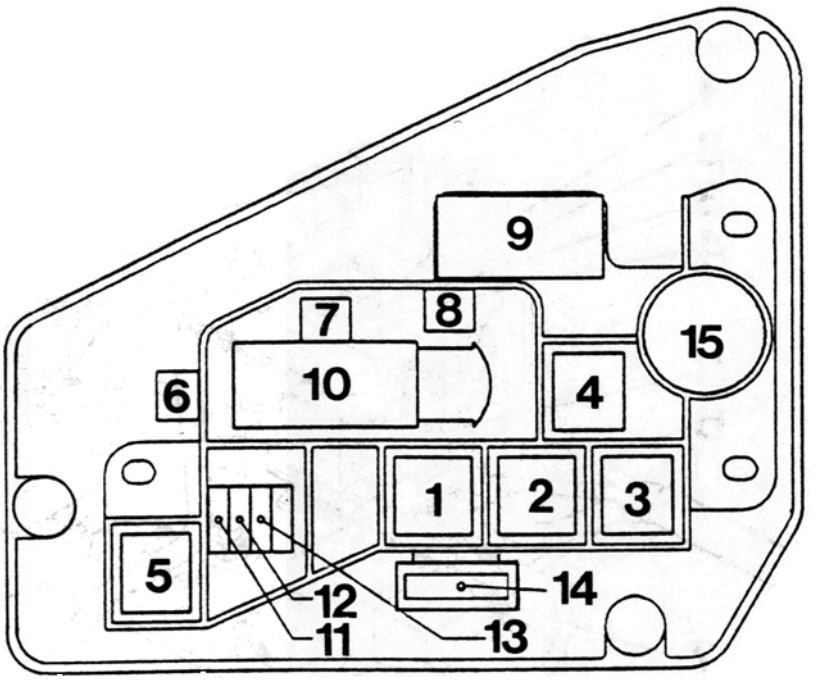

210

1 - Not used

2 - Relay, auxiliary air pump (USA/Canada only)

3 - Relay, AC compressor

4 - Relay, heated rear window

5 - Relay, heater blower

6 - Not used

7 - Connector, suppression capacitor

8 - Not used

9 - Connector, DME X 4/2, engine X3

10 - Connector, DME X 60

11 - Fuse, heater blower 30 A

12 - Fuse, rear window 25 A

13 - Fuse, AC compressor 7,5 A

14 - Fuse, auxiliary air pump 40 A

15 - Suppression capacitor

97 97 Support, ri ht-hand en ne ompartment side

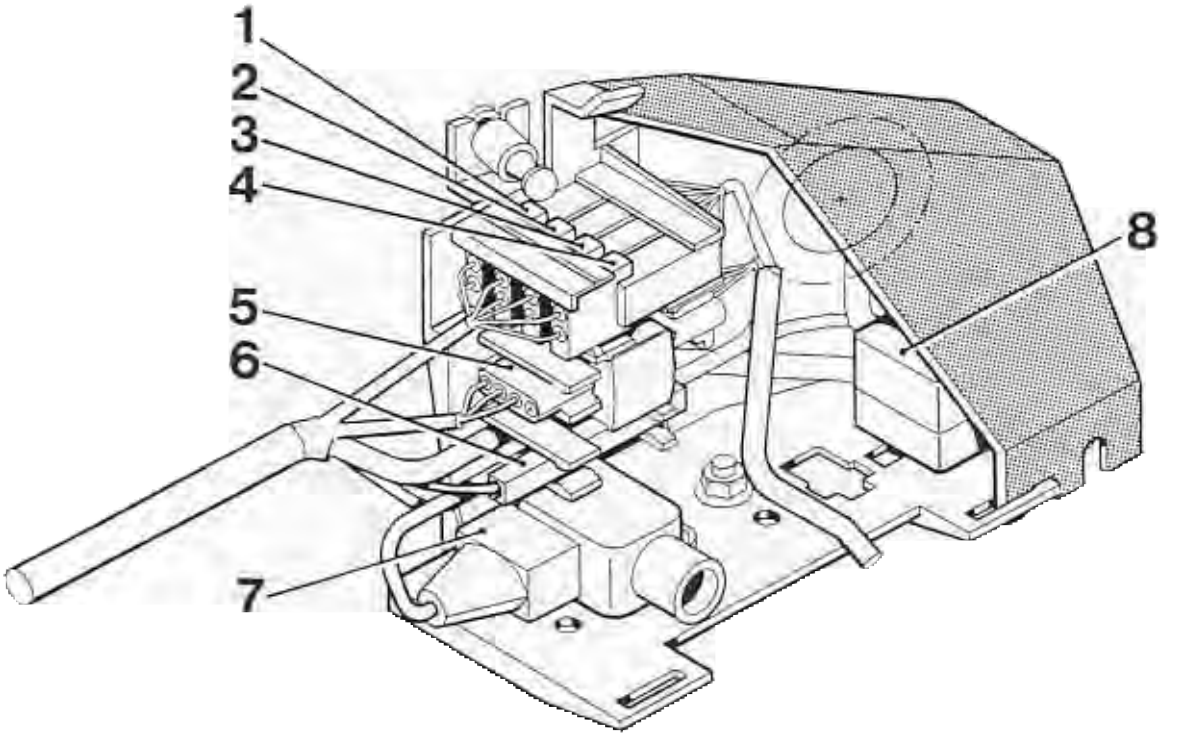

Oi level sender

Micro switc lock

T mperature sensor catalytic converte

Not

Oxyge senso CO potentiometer
vehicles fitted with catalytic converter)

AC compressor

CO potentiometer, for hicle not fitted
with catalytic rte

Rea hts

97 09 Passenger compartment wiring harness

Only one wiring harness is supplied world-wide for service. The following modifications are therefore required when replacing the wiring harness:

LHD vehicles

1. Connect jumper adapter 928. 615. 125. 00 to relay base R 34 on the Central Electrical System (not for Japan and USA/Canada vehicles).
   The foglight relay is retained on Japan and USA/Canada vehicles.

2. Disconnect coding jumper (in front of speedometer) on vehicles with 72-liter tank (wire color orange).

3. On vehicles fitted with anti-drive-off feature (M 530), the wires (0.5 sq.mm br/gn) for the driver door (X 11/1, pin 12) and passenger door (X 12/1, pin 11) connections must be unlatched, cut off and insulated.

4. On Tiptronic vehicles **without anti-drive-off feature,** the yellow-black wire (0.75 sq.mm) for the DME connection (X 4/1, pin 13) must be unlatched and soldered to pin 2 along with the black wire (2.5 sq.mm) (i.e. both wires soldered to pin 2).

5. On manual transmission vehicles **without anti-drive-off feature,** the jumper adapter 964. 610. 184. 00 must be connected on the relay base R 61 of the Central Electrical System.

6. On vehicles **without four-wheel drive**, the brown wire (0.5 sq.mm) must be unlatched from connector II (white) of the Central Information System (pin 24) and insulated.

7. On vehicles **without sound package,** radio connector II (speaker wires) must be separated from the booster adapter (8-pin connector ahead of radio) and connected to the radio.

8. Instead of the buzzer (443. 951. 307 B) of the light reminder, the gong relay (928. 618. 102. 03) must be fitted (already fitted on USA / Canada and Saudi-Arabia vehicles)

RHD vehicles

1. Connect jumper adapter 928. 615. 125. 00 to relay base R 34 on the Central Electrical System (not for Japan and USA/Canada vehicles).
   The foglight relay is retained on Japan and USA/Canada vehicles.

2. On vehicles **without four-wheel drive,** the brown wire (0.5 sq.mm) must be unlatched from connector II (white) of the Central Information System (pin 24) and insulated.

3. On vehicles **without sound package,** radio connector II (speaker wires) must be separated from the booster adapter (8-pin connector ahead of radio) and connected to the radio.

97 09 41 Repairing the passenger compartment wiring harness

Note

The ABS and brake pad wear indicator combination wires are integral parts of the wiring harness. When repairing damaged sections, the integral wires can be cut off and replaced with repair wires.

The passenger compartment wiring harness includes the rear left and right wires.

Run the following operational checks after completing the repair:

ABS: Check with system tester 9288.

Brake pad wear indicator: The lamp must go dim when the engine is running, provided that the pads are in good condition.

Joints

The joints for disconnecting the wiring are located inside the emergency seat pan on the left and right-hand sides ahead of the wire exit towards the outside.

1. Disconnect battery.
2. Fold emergency seat backrests forward.
3. Remove rear panel trim.
4. Tie damping mat out of the way with a strip of self-adhesive tape.

Note

Undo soft top motors on cabriolet vehicles (4 bolts).

5. Starting at the rubber grommets, cut insulating hose open along a length of approx. 20 mm towards the right.
6. Remove PVC insulating tape.
7. Remove shrink-fit caps from joints.
8. Cut off connectors.
9. Remove combination wires.
10. Fit repair wires from wheel carriers towards seat pan.
11. Strip wires along a length of 10 mm.
12. Connect wires according to table with crimp connectors and standard crimping tool (A).

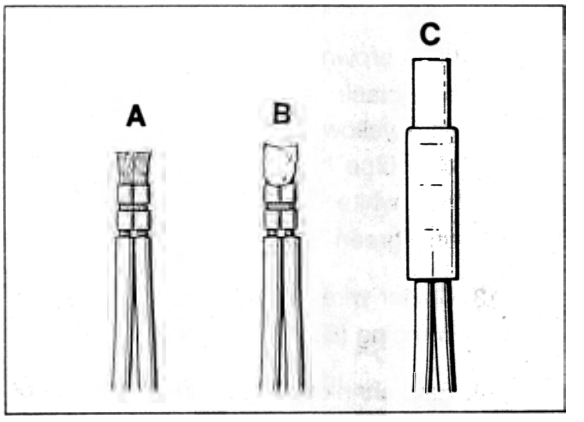

1316 - 97

Combination wire		Wiring harness
Color	Length	Color
		Rear left
br/sw	30 mm	br/sw
br/gn	60 mm	br/gn
br/ws	90 mm	ws*
br/bl	120 mm	shield
br	150 mm	br

* shielded wires

Combination wire		Wiring harness
Color	Length	Color
		Rear right
br/sw	30 mm	br/sw
br/gn	60 mm	br/gn
br/ws	90 mm	ge*
br/bl	120 mm	shield
br	150 mm	br

* shielded wires

br - brown
sw - black
ge - yellow
bl - blue
ws - white
gn - green

13. Solder wire tips after crimping (B).

14. Refit shrink-fit caps and shrink into place with hot air gun (C).

15. Wrap entire joint area with standard PVC tape.

Printed in Germany – VI,1994

97 16 41 Repairing the front-end wiring harness

Note

1916 - 97

The ABS and brake pad wear indicator combination wires are integral parts of the wiring harness. When repairing damaged sections, the integral wires can be cut off and replaced with repair wires.

The front-end wiring harness includes the front left and right wires.

Run the following operational checks after completing the repair:

ABS: Check with ABS tester.

Brake pad wear indicator: The lamp must go dim when the engine is running, provided that the pads are in good condition.

Joints

The joints for disconnecting the wiring are located on the right and left sides inside the luggage compartment above the side member near the strut towers.

Front right

1. Disconnect battery.
2. Remove right-hand front wheel
3. Remove rear wheel housing liner.
4. Undo tie-wrap in wheel housing area.
5. Undo tie-wrap in luggage compartment.

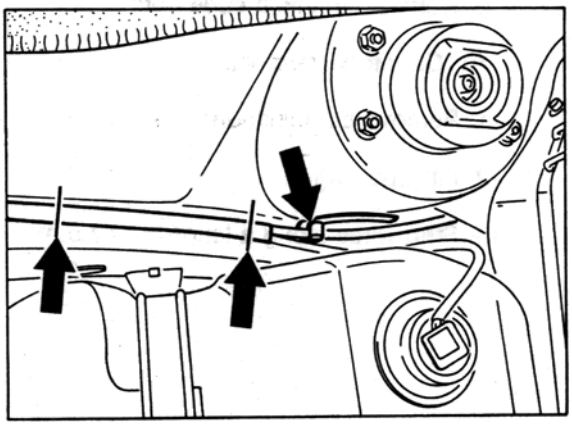

6. Cut insulating hose open at the wiring harness.
7. Remove PVC insulating tape.
8. Remove shrink-fit caps from joints.
9. Cut off connectors.
10. Remove combination wire.
11. Fit repair wire.
12. Strip wire along a length of 10 mm.
13. Connect wires according to table with crimp connectors and standard crimping tool (A).

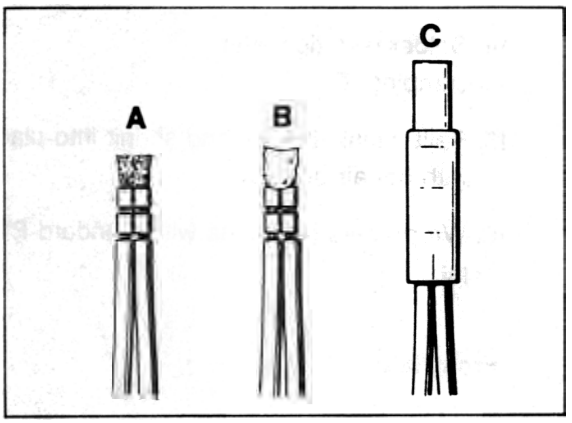

Combination wire		Wiring harness
Color	Length	Color
		Front right
br/sw	30 mm	br/sw
br/gn	60 mm	br/gn
br/ws	90 mm	gn*
br/bl	120 mm	shield
br	150 mm	br

* shielded wire

br - brown
sw - black
bl - blue
ws - white
gn - green

14. Solder wire tips after crimping (B).
15. Refit shrink-fit caps and shrink into place with hot air gun (C).
16. Wrap entire joint area with standard PVC tape.

Front left

1. Disconnect battery.
2. Remove left-hand front wheel
3. Remove rear wheel housing liner.
4. Undo tie-wrap in wheel housing area.
5. Remove bracket for brake fluid reservoir.

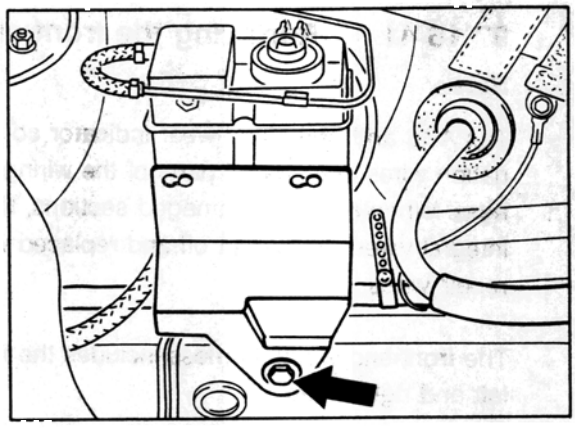

1917 - 97

6. Undo tie-wrap in luggage compartment.

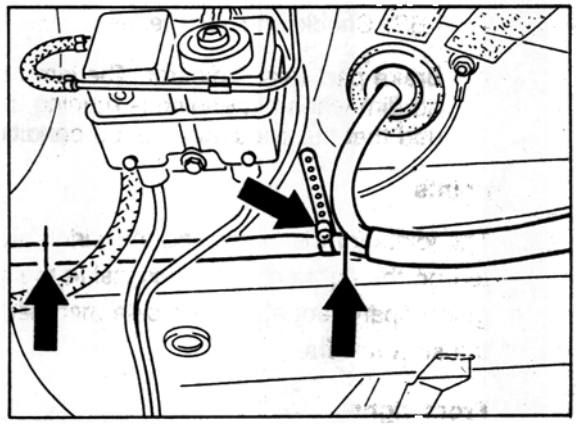

7. Cut insulating hose open at the wiring harness.
8. Remove PVC insulating tape.
9. Remove shrink-fit caps from joints.
10. Cut off connectors.
11. Remove combination wire.
12. Fit repair wire.
13. Strip wires along a length of 10 mm.

14. Connect wires according to table with crimp connectors and standard crimping tool (A).

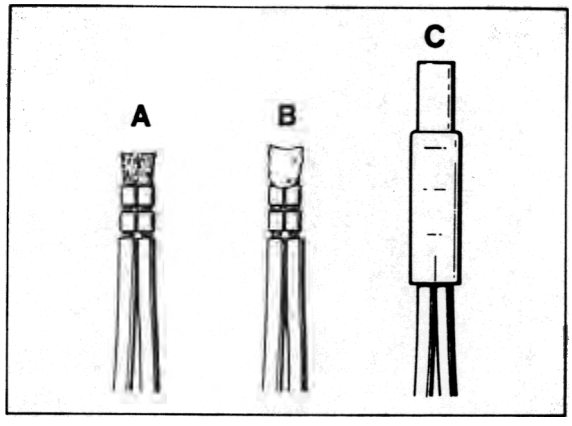

Combination wire		Wiring harness
Color	Length	Color
		Front left
br/sw	30 mm	br/sw
br/gn	60 mm	br/gn
br/ws	90 mm	rt*
br/bl	120 mm	shield
br	150 mm	br

* shielded wire

br - brown
sw - black
rt - red
bl - blue
ws - white
gn - green

15. Solder wire tips after crimping (B).

16. Refit shrink-fit caps and shrink into place with hot air gun (C).

17. Wrap entire joint area with standard PVC tape.

97 09 Spare part - passenger compartment wire harness for Model '95

World-wide, 8 wire harnesses are available as spare parts. When using this wire harness, the following modifications must therefore be made:

Left-hand drive vehicles, model '95

1. Insert jumper adapter 964.610.184.00 in relay socket R 34 on the central electrical system (not for Japan and USA/Canada vehicles).
   On Japan and USA/Canada vehicles, the foglight relay remains in position.

2. On Tiptronic vehicles **without immobilizer,** the wire (0.75 mm^2 yellow/black) on the immobilizer relay (R 61), pin 7, must be cut off about 80 mm ahead of the relay socket.
   The lead from relay pin 7 must then be crimped to the lead (4 mm^2, yellow) from pin 3 (double connection).
   See wiring diagram - section N 49 line (0.75 mm^2 yellow) "M 249 not M 530"

3. On manual vehicles **without immobilizer**, jumper adapter 964.610.184.00 must be inserted in relay socket R 61 on the central electrical system.

4. On vehicles **with immobilizer**, the lead (0.5 mm^2 orange/black) at connector X 4/2 pin 12 (double connection), must be cut off at the contact, insulated and tied up.

5. On vehicles **without four-wheel drive**, the lead (0.5 mm^2 brown) from connector II (white) on the central informer (Pin 24) must be unclipped and insulated.

6. On vehicles with small fuel tanks (approx. 71 l) the lead (0.5 mm^2 orange/black) from connector II (white) on the central informer (pin 26) must be unclipped and insulated.

7. On vehicles without **sound package**, radio connector II (loudspeaker lines) must be disconnected from the booster adapter (8-pin connector ahead of radio) and connected to the radio.

8. Instead of the buzzer (443.951.307 B) for the light warning, the gong relay (928.618.102.03) must be installed (already installed on vehicles for USA/Canada and Saudi Arabia).

97 09 Spare part - passenger compartment wire harness for Model '95

World-wide, 8 wire harnesses are available as spare parts. When using this wire harness, the following modifications must therefore be made:

Right-hand drive vehicles, model '95

1. Insert jumper adapter 964.610.184.00 in relay socket R 34 on the central electrical system.
   (not for Japan and USA/Canada vehicles).
   On Japan and USA/Canada vehicles, the foglight relay remains in position.

2. On Tiptronic vehicles **without immobilizer,** the wire (0.75 mm^2 yellow/black) on the immobilizer relay (R 61), pin 7, must be cut off about 80 mm ahead of the relay socket.
   The lead from relay pin 7 must then be crimped to the lead (4 mm^2, yellow) from pin 3 (double connection).
   See wiring diagram - section N 49 line (0.75 mm^2 yellow) "M 249 not M 530"

3. On manual vehicles **without immobilizer**, jumper adapter 964.610.184.00 must be inserted in relay socket R 61 on the central electrical system.

4. On vehicles **with immobilizer**, the lead (0.5 mm^2 orange/black) at connector X 4/2 pin 12 (double connection), must be cut off at the contact, insulated and tied up.

5. On vehicles **without four-wheel drive**, the lead (0.5 mm^2 brown) from connector II (white) on the central informer (Pin 24) must be unclipped and insulated.

6. On vehicles without **sound package**, radio connector II (loudspeaker lines) must be disconnected from the booster adapter (8-pin connector ahead of radio) and connected to the radio.

7. On vehicles **with sound package**, channels VR and VL and channels HR and HL must be interchanged at radio connector II (socket contact).
   1.5 mm^2 brown/black (Pin 6) must be interchanged with
   1.5 mm^2 brown/white (Pin 4)

   1.5 mm^2 black (Pin 5) must be interchanged with
   1.5 mm^2 white (Pin 3)

   1.5 mm^2 brown/red (Pin 2) must be interchanged with
   1.5 mm^2 brown/yellow (Pin 8)

   1.5 mm^2 red (Pin 1) must be interchanged with
   1.5 mm^2 yellow (Pin 7)

97 50 41 Repairing wire harness no. 173 (DME)

Note

As of model year 1996, knock sensors, speed senders and temperature sensors with optimized plug connections will be installed. In this case, the connector housing of older wire harnesses must be modified.

1. Cut wires right next to the old connector housing.

2. Push new sheaths onto each individual wire and insulate wires on a length of approx. 5 mm.

3. Use a crimping tool to crimp the connector contact and the sheath.

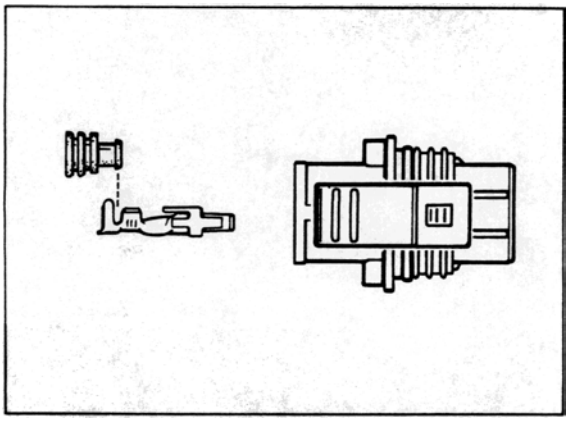

2309-97

4. As for the terminal assignment in the connector housing, the wiring diagram and the following table must be observed.

Knock sensors 1 and 2

Term. 1 - WS (white)
Term. 2 - BR (brown)
Term. 3 - Sheath

Speed sender

Term. 1 - WS (white)
Term. 2 - BR (brown)
Term. 3 - Sheath

Engine temperature sensor (NTC II)

Term. 1 - SW/RT (black/red)
Term. 2 - Dummy plug
Term. 3 - BR (brown)

5. Terminal 2 on the temperature sensor is not used and has to be fitted with a dummy plug.

Note

These optimized parts can also be installed in the 911 Carrera (964) as of model year 1989. The old connector housings of the DME wire harness must be replaced.

97 52 Engine wire harness

Note

The injection valves for cylinders 1 to 6 are no longer marked on the wire harness. Assignment is now based on the different colors of the connector housings.

Cylinder	Color of connector housing
1 and 4	white
2 and 5	brown
3 and 6	blue

97 09 Spare part - passenger compartment wire harness for Model '96

Remark

On Cabriolet and Targa vehicles, removing or installing the cable for the interior light and the passenger compartment monitoring sensor **below the A-pillar is impossible with the windshield installed**. In this case, cut off the passenger compartment wire harness (marked with yellow adhesive tape) before the instruments and as close to the main wire harness as possible.

When installing a new passenger compartment wire harness, cut off the wires behind the yellow adhesive tape and connect them to the vehicle's wires of the same color by soldering or crimping. Then insulate the wires thoroughly. New passenger compartment wire harness delivered by After-Sales always include lines for the passenger compartment monitoring system. Insulate these wires thoroughly if they are not used.

If the windshield has been removed or if the wire harness is installed in the A-pillar on vehicles without passenger compartment monitoring, cut off the 6-pin plug connection in the cutout for the light in the windshield frame. Then fit a flat receptacle N 17 480.5 and an insulating bushing 111.971.921 B to the brown, the brown/white and the red wire and connect these wires to the interior light. Insulate the yellow/red wire and the yellow/black wire thoroughly and tie them to the wire harness using tie-wraps.

Left-hand drive vehicles, model '96

1. Insert jumper adapter 964.610.184.00 in relay socket R 34 on the central electrical system (not for Japan and USA/Canada vehicles).
   On Japan and USA/Canada vehicles, the foglight relay remains in position.
2. On Tiptronic vehicles **without immobilizer,** the wire (0.75 mm^2 yellow/black) on the immobilizer relay (R 61), pin 7, must be cut off about 80 mm ahead of the relay socket. The lead from relay pin 7 must then be crimped to the lead (4 mm^2, yellow) from pin 3 (double connection).
   See wiring diagram - section N 49 line (0.75 mm^2 yellow) "M 249 not M 530"
3. On manual vehicles **without immobilizer**, jumper adapter 964.610.184.00 must be inserted in relay socket R 61 on the central electrical system.
4. On vehicles **with immobilizer**, the lead (0.5 mm^2 orange/black) at connector X 4/2 pin 12 (double connection), must be cut off at the contact, insulated and tied up.
5. On vehicles **without four-wheel drive**, the lead (0.5 mm^2 brown) from connector II (white) on the central informer (Pin 24) must be unclipped and insulated.
6. On vehicles with small fuel tanks (approx. 71 l) the lead (0.5 mm^2 orange/black) from connector II (white) on the central informer (pin 26) must be unclipped and insulated.
7. On vehicles without **sound package**, radio connector II (loudspeaker lines) must be disconnected from the booster adapter (8-pin connector ahead of radio) and connected to the radio.
8. Instead of the buzzer (443.951.307 B) for the light warning, the gong relay (928.618.102.03) must be installed (already installed on vehicles for USA/Canada and Saudi Arabia).

Printed in Germany - 16, 1996

97 09 Spare part - passenger compartment wire harness for Model '96

Right-hand drive vehicles, model '96

1. Insert jumper adapter 964.610.184.00 in relay socket R 34 on the central electrical system.
   (not for Japan and USA/Canada vehicles).
   On Japan and USA/Canada vehicles, the foglight relay remains in position.

2. On Tiptronic vehicles **without immobilizer,** the wire (0.75 mm^2 yellow/black) on the immobilizer relay (R 61), pin 7, must be cut off about 80 mm ahead of the relay socket.
   The lead from relay pin 7 must then be crimped to the lead (4 mm^2, yellow) from pin 3 (double connection).
   See wiring diagram - section N 49 line (0.75 mm^2 yellow) "M 249 not M 530"

3. On manual vehicles **without immobilizer**, jumper adapter 964.610.184.00 must be inserted in relay socket R 61 on the central electrical system.

4. On vehicles **with immobilizer**, the lead (0.5 mm^2 orange/black) at connector X 4/2 pin 12 (double connection), must be cut off at the contact, insulated and tied up.

5. On vehicles **without four-wheel drive**, the lead (0.5 mm^2 brown) from connector II (white) on the central informer (Pin 24) must be unclipped and insulated.

6. On vehicles without **sound package**, radio connector II (loudspeaker lines) must be disconnected from the booster adapter (8-pin connector ahead of radio) and connected to the radio.

7. On vehicles **with sound package**, channels VR and VL and channels HR and HL must be interchanged at radio connector II (socket contact).
   1.5 mm^2 brown/black (Pin 6) must be interchanged with
   1.5 mm^2 brown/white (Pin 4)

   1.5 mm^2 black (Pin 5) must be interchanged with
   1.5 mm^2 white (Pin 3)

   1.5 mm^2 brown/red (Pin 2) must be interchanged with
   1.5 mm^2 brown/yellow (Pin 8)

   1.5 mm^2 red (Pin 1) must be interchanged with
   1.5 mm^2 yellow (Pin 7)

Printed in Germany - 16, 1996

97 09 Spare part - passenger compartment wire harness for Model '96

Note

Supplement to Spare part-passenger compartment wire harness for Model '96, on Page 97 - 015 for left-hand drive vehicles or Page 97 - 016 for right-hand drive vehicles.

Left-hand drive vehicles, '96 model

1. In general, all unneeded tie-outs and connectors must be carefully tied in and secured against rattling when replacement harnesses are used.

2. On **Targa vehicles with telephone** (M615), the telephone antenna must be subsequently pulled through the central electrical system flange (toward luggage compartment). Excess length is accommodated in front of right-hand A-pillar.

3. On **Coupe vehicles with naturally aspirated engine**, the tie-out for the interior light and passenger compartment monitoring (left-hand A-pillar for Targa) must be tied back or cut off and insulated.

4. On **Targa vehicles**, the sliding-roof switch plug (2.5 sq. mm wire) – or the two plugs for glass roof and roller sun blind (each 3 x 0.5 sq. mm wire) on Coupe vehicles – must be tied back and secured against rattling.

5. Tie back excess length at rear spoiler switch (required on Targa with rear window wiper) if not used.

6. On **Coupe vehicles**, the excess length must be carefully tied back at the rear-wiper motor.

7. On **UST vehicles**, the rear-spoiler tie-out must be tied back at the right in the engine compartment.

8. On **Targa vehicles with manual transmission for the USA**, the two tied-in wires 0.5 YE/BK and 0.5 YE/RD on plug II of the alarm system control module must be swapped with the two wires of the same colour in ports II 24 and II 8.

9. On **Coupe and Targa vehicles with naturally aspirated engines for the USA**, the combination wire (ABS - BVA) must be routed through the heel plate at the rear left instead of through the seat well (like Turbo). Close off seat well bore with the old wiring harness grommet and sealant.

10. On **RS vehicles** (M003) with battery disconnection switch, the tied-in red 2.0 sq. mm wire must be swapped with the wire of the same colour at terminal 30 in the plug of the hazard warning light switch. Cut off contact at former wire and carefully insulate and tie in the wire.

11. On **UST vehicles** with large tank (90 l = M 545), the wire (0.5 BN) must be disconnected from pin 26 of plug II (white) in the central information system and insulated.

Right-hand drive vehicles, '96 model

1. In general, all unneeded tie-outs and connectors must be carefully tied in and secured against rattling when replacement harnesses are used.

2. On **Coupe vehicles with naturally aspirated engine**, the tie-out for the interior light and passenger compartment monitoring (left-hand A-pillar for Targa) must be tied back or cut off and insulated.

3. On **Targa vehicles**, the sliding-roof switch plug (2.5 sq. mm wire) – or the two plugs for glass roof and roller sun blind (each 3 x 0.5 sq. mm wire) on Coupe vehicles – must be tied back and secured against rattling.

4. Tie back excess length at rear spoiler switch (required on Targa with rear-window wiper) if not used.

5. On **Coupe vehicles**, the excess length must be carefully tied back at the rear-wiper motor.

6. On **UST vehicles**, the rear-spoiler tie-out must be tied back at the right in the engine compartment.

7. On **Targa vehicles with manual transmission for the USA**, the two tied-in wires 0.5 YE/BK and 0.5 YE/RD on plug II of the alarm system control module must be swapped with the two wires of the same colour in ports II 24 and II 8.

8. On **Coupe and Targa vehicles with naturally aspirated engine for the USA**, the combination wire (ABS - BVA) must be routed through the heel plate at the rear left instead of through the seat well (like Turbo). Close off seat well bore with the old wiring harness grommet and sealant.

9. On **RS vehicles** (M003) with battery disconnection switch, the tied-in red 2.0 sq. mm wire must be swapped with the wire of the same colour at terminal 30 in the plug of the hazard warning light switch. Cut off contact at former wire and carefully insulate and tie in the wire.

97 09 Spare part - passenger compartment wire harness for Model '97

Note

All conversion work described on Pages 97 - 015 to 97 - 018 for the spare part - passenger compartment wire harness for Model '96 also must be performed on the spare part - passenger compartment wire harness for Model '97. Four further conversion work steps are necessary for the model year '97.

Left-hand drive vehicles, '97 model

1. On **vehicles with DSP** (M680), the wire 0.5 WT/RD must be removed from port 1 of radio plug A (black) and insulated.

2. On **vehicles with telephone** (M615 or M618) in combination with sound package, the 2-pole connection wire BU and BU/BN in the centre console is connected to the amplifier instead of the loudspeaker.

3. On **LHD UST vehicles** (not 553), the plug interlock must be cut off and the two wires BN and BN/WT crimped or soldered together. Then insulate them carefully and tie in (starter function!!).

Right-hand drive vehicles, '97 model

1. On **vehicles with DSP** (M680), the wire 0.5 WT/RD must be removed from port 1 of radio plug A (black) and insulated.

Wiring Diagram Type 911 Carrera (993) Model 95

	Coordinates	
Sheet 1	1 - 10	Lights
Sheet 2	11 - 20	Alarm System, Central Locks, Mirror, Power Window Regulator, Inside Lights
Sheet 3	21 - 30	Heater, AC, Coolant Fan, Rear Window Defogger
Sheet 4	31 - 40	ABS, ABD
Sheet 5	41 - 50	Motor, Ignition, Cruise Control
Sheet 6	51 - 60	Instruments, Sensor, Central Informer, On-board computer
Sheet 7	61 - 70	Seats
Sheet 8	71 - 80	Rear Spoiler, Two-Tone Horns, Wipe- and Wash Cleaners, Sun Roof, Convertible Top
Sheet 9	81 - 90	Radio, Telephone
Sheet 10	91 - 100	Fog Light, Rear Fog Light
Sheet 11		Central Electric
Sheet 12	111 - 120	Airbag
Sheet 13	121 - 130	Tiptronic
Sheet 14	131 - 140	Ground Points
Sheet 15		Construction Components
Sheet 16		Plug Connections, M-Numbers, Abbreviations
Sheet 17	141 - 150	Code Lock

Wiring Diagram Type 911 Carrera (993) Model 95

The wiring diagram consists of 14 *individual wiring diagrams*, 1 sheet *construction components*, 1 sheet *plug connections* and 1 sheet *ground points*. These are divided into coordinate fields.

Each individual wiring diagram contains a part of the central-electrics box in a dashdotted frame.

This part of the central-electrics box shows all the lines and relays necessary for the individual wiring diagram.

The earth/ground points are identified by "GP" and their location is shown in a vehicle diagram.

The 10-pin connectors on the central-electrics box are clipped together out of 3 parts, the 20-pin connectors are clipped together out of 5 parts.

Part 1, with the moduled-on fastening lug, is the "starting element".

Parts 2,3 and 4 are "module elements".

The 10-pin connectors only contents one "module element".

Start- and module elements are identified by the numbers 1.....5.

Part 5 ist a "coding element".

The designations of the plug connections in the wiring diagram refer to the "starting element" from, for example, A 11.....15, and to the first module element from A 21.....25.

The connectors are identified by an X and a number.

Wherever wires branch to another page, the coordinates and, in certain cases, the terminal markings are indicated.

The input and output signals of control units are indicated by arrows.

The feed wire of wire joints is indicated by an arrow.

Printed in Germany – II, 1993

Wiring Diagram 911 Carrera (993) Model 95/2

	Coordinates	
Sheet 1	1 - 10	
Sheet 2	11 - 20	Alarm System, Central Locks, Mirror, Power Window Regulator, Inside Lights
Sheet 3	21 - 30	Heater, AC, Coolant Fan, Rear Window Defogger
Sheet 4 A	31 - 40	
Sheet 4 B	31 - 40	ABS (RS)
Sheet 5 A	41 - 50	Motor, Ignition, Cruise Control
Sheet 6	51 - 60	Instruments, Sensor, Central Informer, On-board computer
Sheet 7	61 - 70	
Sheet 8	71 - 80	Rear Spoiler, Two-Tone Horns, Wipe- and Wash Cleaners, Sun Roof, Convertible Top
Sheet 9	81 - 90	Radio, Telephone
Sheet 10	91 - 100	Fog Light, Rear Fog Light
Sheet 11	101 - 110	Code Lock
Sheet 12	111 - 120	Airbag
Sheet 13	121 - 130	Tiptronic
Sheet 14	131 - 140	Ground Points
Sheet 15		Construction Components
Sheet 16		Plug Connections, M-Numbers, Abbreviations
Sheet 17		Central Electric

For vehicles with V.I.N.s from WP0 AA2 99 1SS3 21454 and from WP0 CA2 99 8SS3 41225

Wiring Diagram 911 Carrera (993) Model 95/2

The wiring diagram consists of 15 *individual wiring diagrams*, 1 sheet *construction components*, 1 sheet *plug connections* and 1 sheet *ground points*. These are divided into coordinate fields.

Each individual wiring diagram contains a part of the central-electrics box in a dashdotted frame.

This part of the central-electrics box shows all the lines and relays necessary for the individual wiring diagram.

The earth/ground points are identified by "GP" and their location is shown in a vehicle diagram.

The 10-pin connectors on the central-electrics box are clipped together out of 3 parts, the 20-pin connectors are clipped together out of 5 parts.

Part 1, with the moduled-on fastening lug, is the "starting element".

Parts 2,3 and 4 are "module elements".

The 10-pin connectors only contents one "module element".

Start- and module elements are identified by the numbers 1 .5.

Part 5 ist a "coding element".

The designations of the plug connections in the wiring diagram refer to the "starting element" from, for example, A 11.....15, and to the first module element from A 21.....25.

The connectors are identified by an X and a number.

Wherever wires branch to another page, the coordinates and, in certain cases, the terminal markings are indicated.

The input and output signals of control units are indicated by arrows.

The feed wire of wire joints is indicated by an arrow.

911 Carerra (993) MODEL 95/2 SHEET 1

LIGHTS

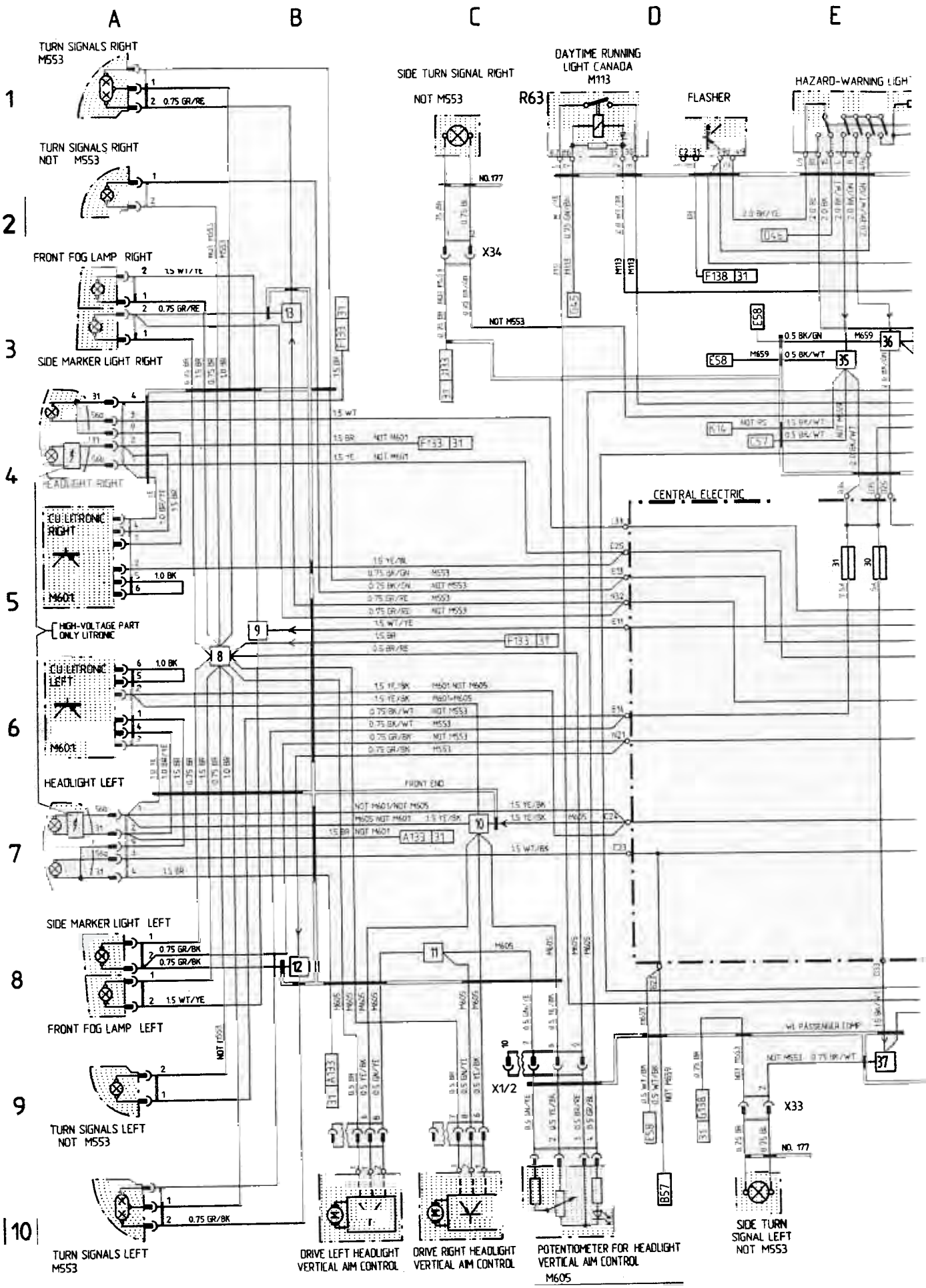

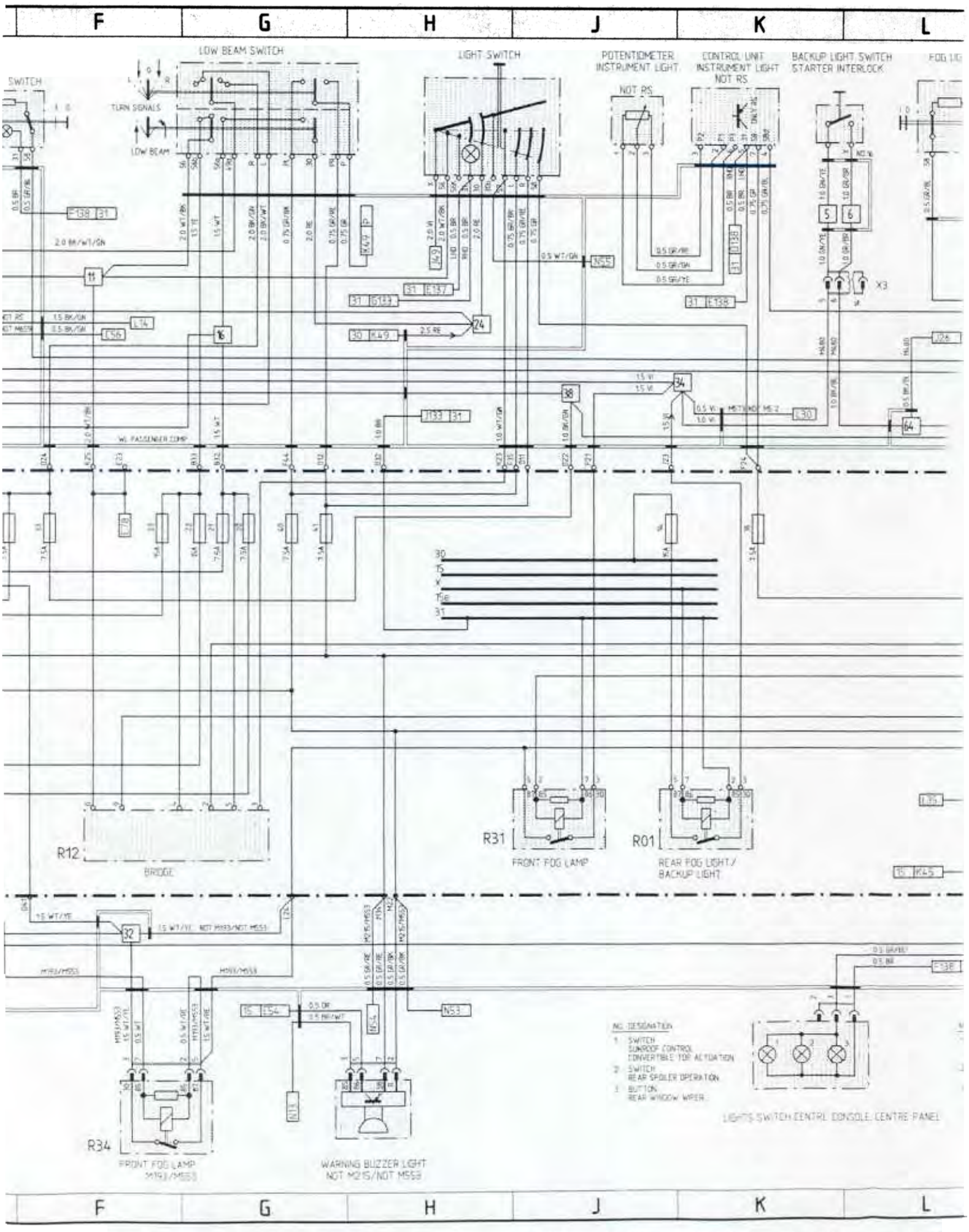
F
G
H
J
K
L
LOW BEAM SWITCH
LIGHT SWITCH
POTENTIOMETER INSTRUMENT LIGHT
CONTROL UNIT INSTRUMENT LIGHT
BACKUP LIGHT SWITCH STARTER INTERLOCK
TURN SIGNALS
LOW BEAM
NOT RS
NOT RS
W. PASSENGER COMP.
R12
BRIDGE
R31
FRONT FOG LAMP
R01
REAR FOG LIGHT / BACKUP LIGHT
R34
FRONT FOG LAMP M193/M553
WARNING BUZZER LIGHT NOT M215/NOT M559
NO. DESIGNATION
1 SWITCH SUNROOF CONTROL CONVERTIBLE TOP ACTUATION
2 SWITCH REAR SPOILER OPERATION
3 BUTTON REAR WINDOW WIPER
LIGHTS SWITCH CENTRL CONSOLE, CENTRE PANEL
BK = BLACK
WT = WHITE
RE = RED
GN = GREEN
YE = YELLOW
GR = GREY
BR = BROWN
BL = BLUE
VI = VIOLET

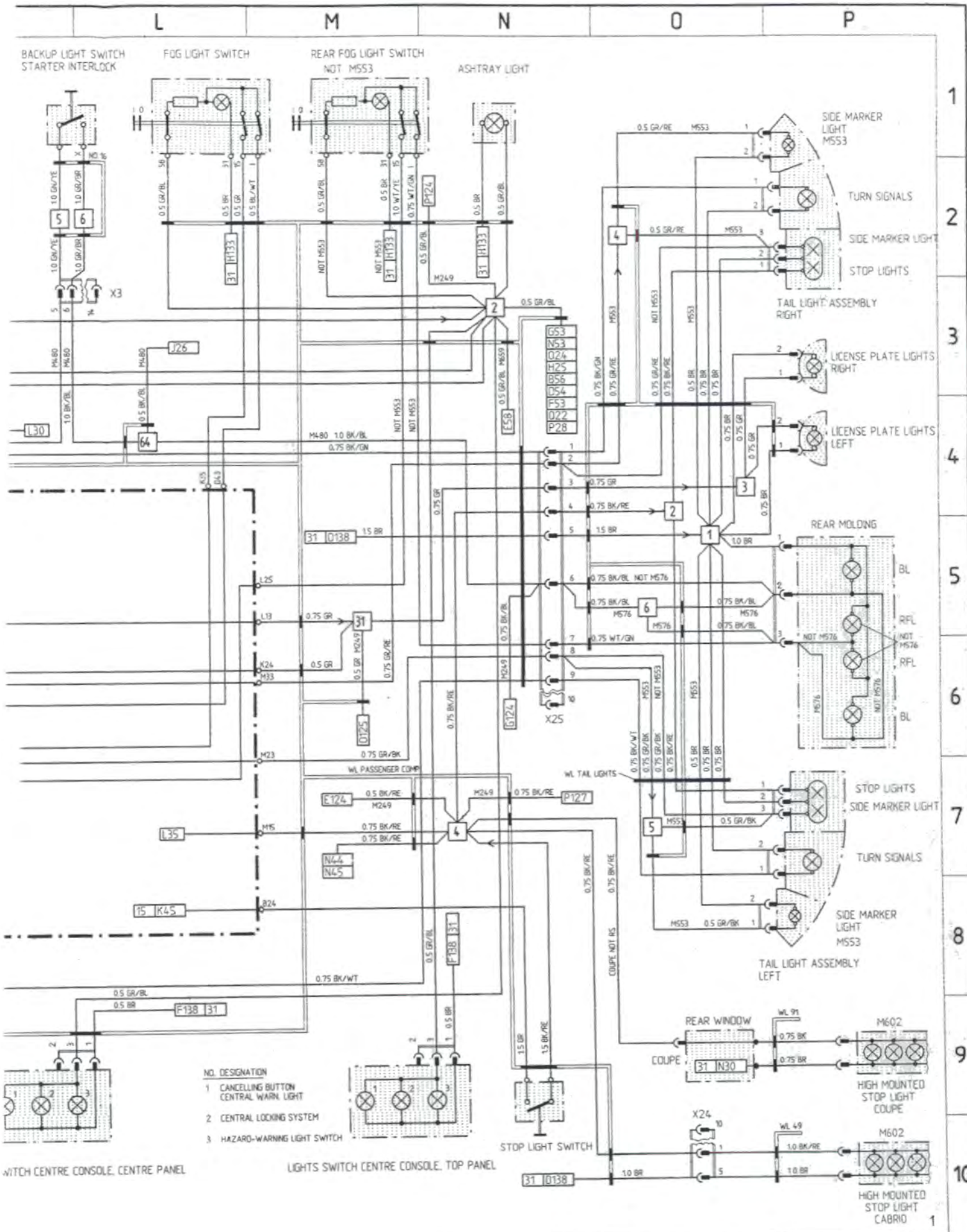
L
M
N
O
P
1
2
3
4
5
6
7
8
9
10
BACKUP LIGHT SWITCH
STARTER INTERLOCK
FOG LIGHT SWITCH
REAR FOG LIGHT SWITCH
NOT M553
ASHTRAY LIGHT
SIDE MARKER LIGHT
M553
TURN SIGNALS
SIDE MARKER LIGHT
STOP LIGHTS
TAIL LIGHT ASSEMBLY RIGHT
LICENSE PLATE LIGHTS RIGHT
LICENSE PLATE LIGHTS LEFT
REAR MOLDING
BL
RFL
NOT M576
STOP LIGHTS
SIDE MARKER LIGHT
TURN SIGNALS
SIDE MARKER LIGHT
M553
TAIL LIGHT ASSEMBLY LEFT
REAR WINDOW
COUPE
M602
HIGH MOUNTED STOP LIGHT COUPE
HIGH MOUNTED STOP LIGHT CABRIO
STOP LIGHT SWITCH
X3
X25
X24
J26
L30
L35
K45
E124
P127
N44
N45
F138
G124
E58
P124
G53
N53
O24
H25
B56
D54
F53
O22
P28
WL PASSENGER COMP
WL TAIL LIGHTS
COUPE NOT RS
NO. DESIGNATION
1 CANCELLING BUTTON CENTRAL WARN. LIGHT
2 CENTRAL LOCKING SYSTEM
3 HAZARD-WARNING LIGHT SWITCH
WITCH CENTRE CONSOLE, CENTRE PANEL
LIGHTS SWITCH CENTRE CONSOLE, TOP PANEL

911 Carrera (993) MODEL 95/2 SHEET 2

SEATS, ALARM SYSTEM, CENTRAL LOCKS, MIRROR, POWER WINDOW REGULATOR, INSIDE LIGHTS

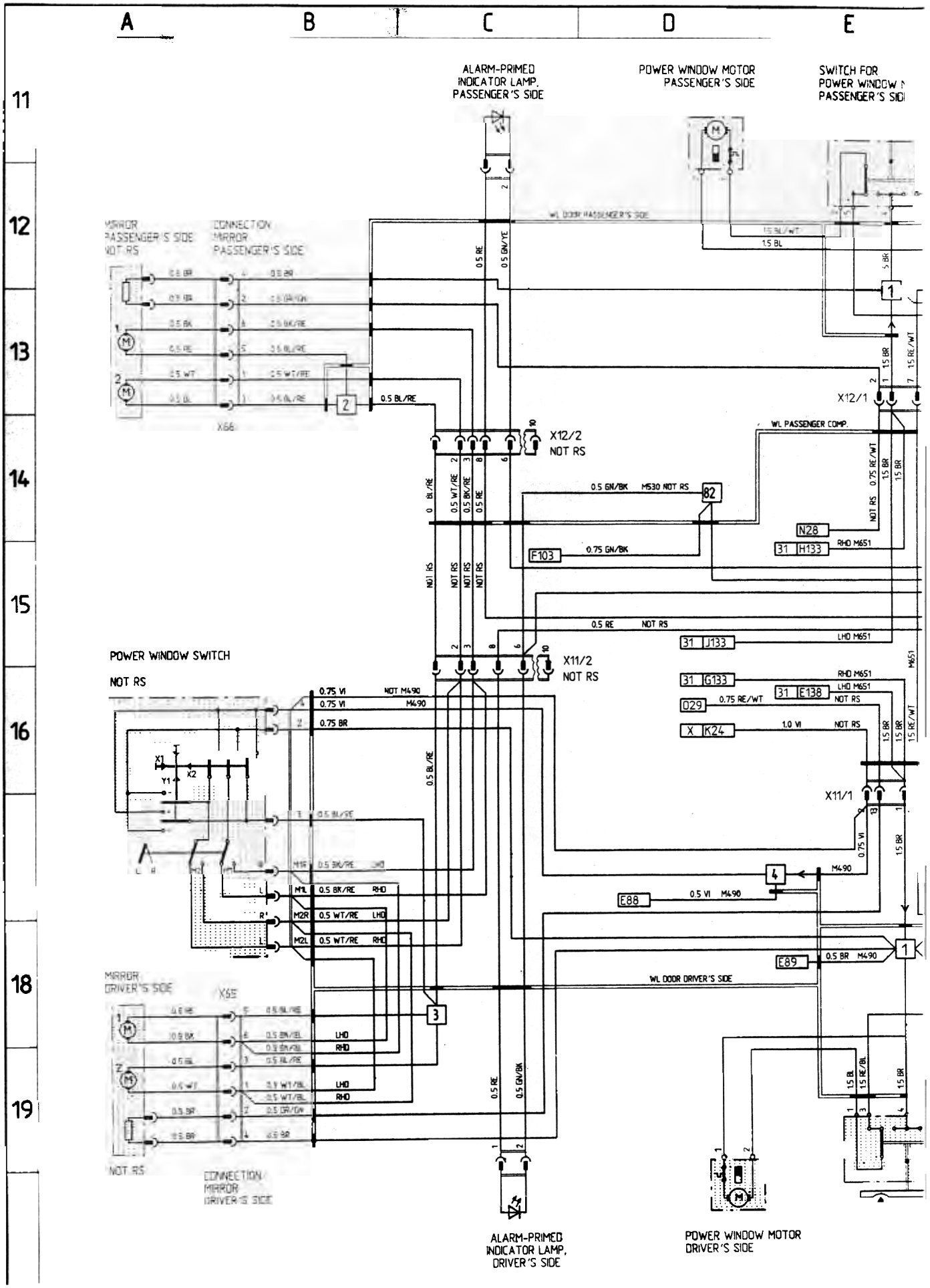

CONTROL UNIT ALARM SYSTEM/CENTRAL LOCKING S'

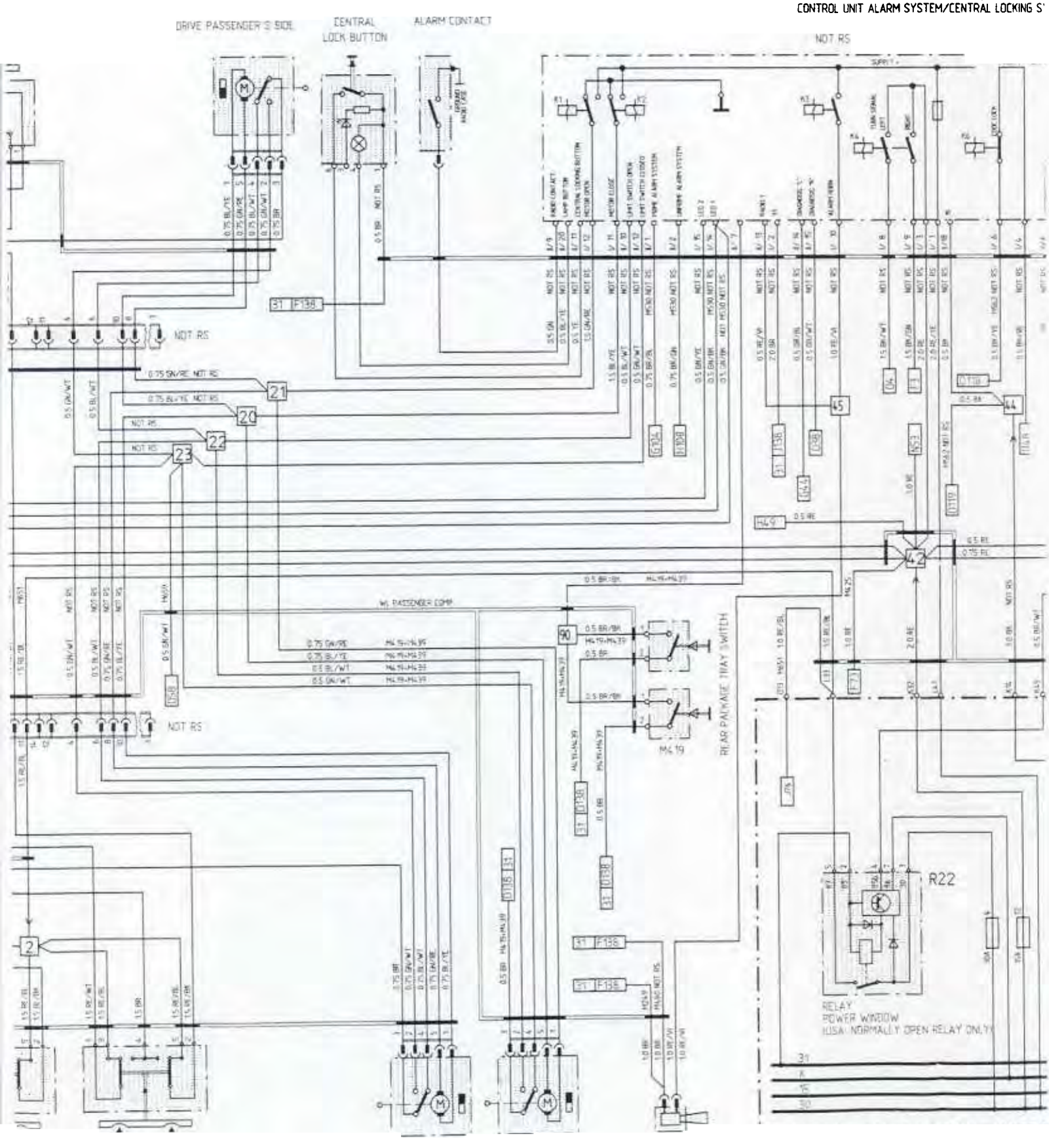

MOTOR

SWITCH FOR
POWER WINDOW MOTOR
PASSENGER'S SIDE

DRIVE DRIVER'S SIDE

DRIVE REAR
PACKAGE TRAY

BK = BLACK WT WHITE RE = RED GN = GREEN YE = YELLOW GR = GREY BR = BROWN BL = BLUE VI = VIOLE

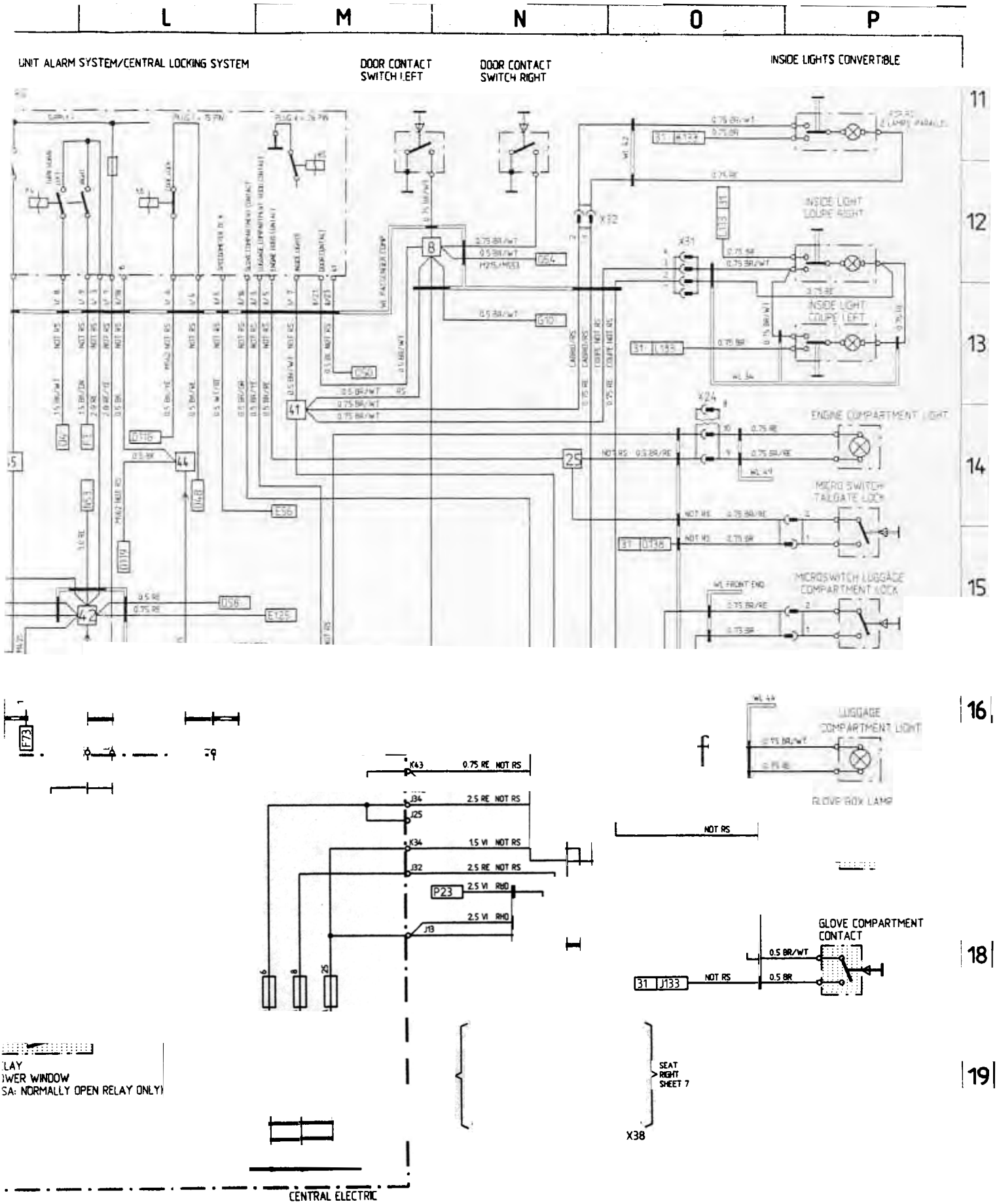
L
M
N
O
P
UNIT ALARM SYSTEM/CENTRAL LOCKING SYSTEM
DOOR CONTACT SWITCH LEFT
DOOR CONTACT SWITCH RIGHT
INSIDE LIGHTS CONVERTIBLE
11
12
13
14
15
16
18
19
INSIDE LIGHT COUPE RIGHT
INSIDE LIGHT COUPE LEFT
ENGINE COMPARTMENT LIGHT
MICRO SWITCH TAILGATE LOCK
MICROSWITCH LUGGAGE COMPARTMENT LOCK
LUGGAGE COMPARTMENT LIGHT
GLOVE BOX LAMP
GLOVE COMPARTMENT CONTACT
SEAT RIGHT SHEET 7
X38
CENTRAL ELECTRIC
LAY
WER WINDOW
SA: NORMALLY OPEN RELAY ONLY)

911 Carrera (993) MODEL 95/2 SHEET 3

HEATER / AC

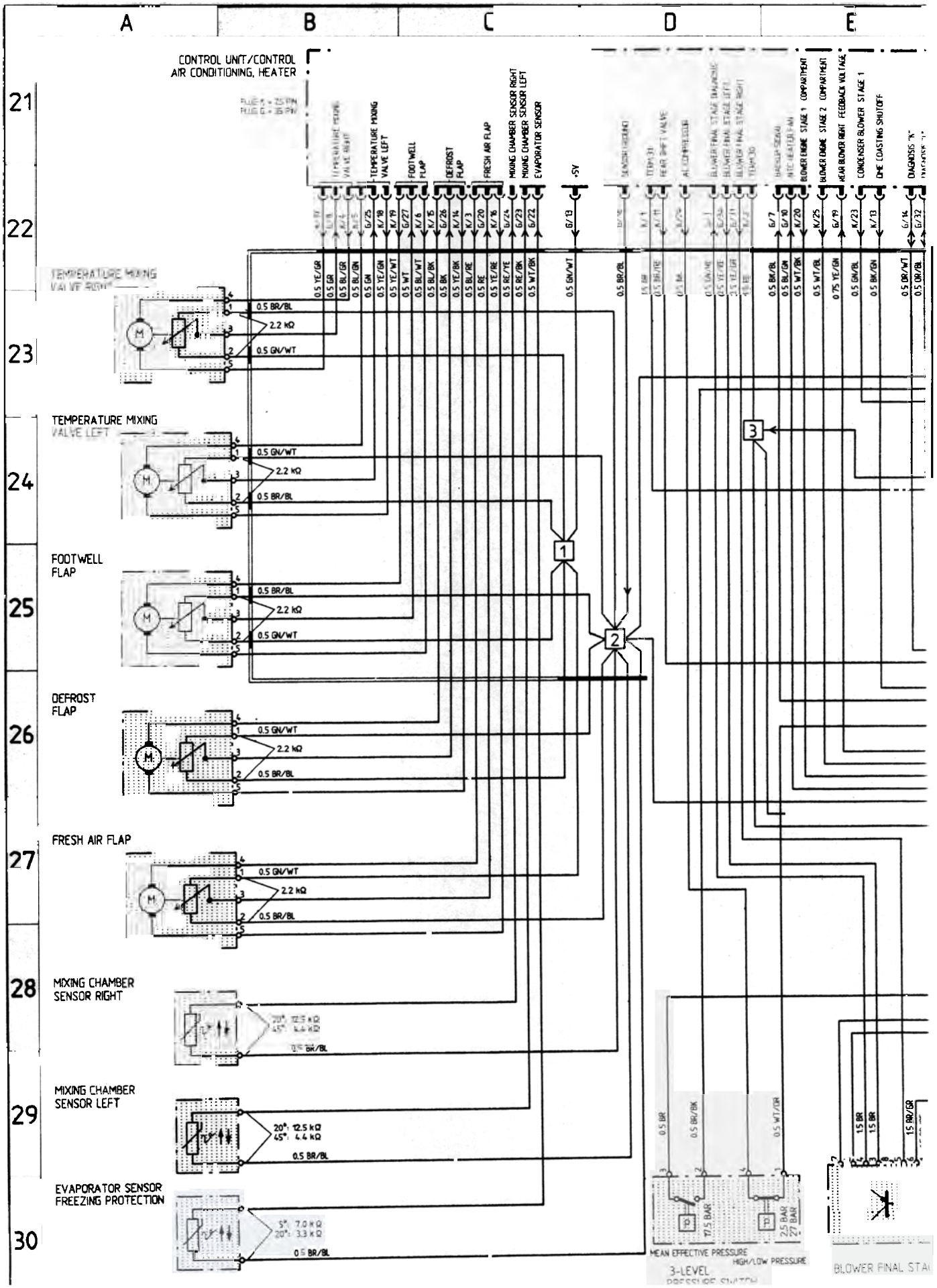

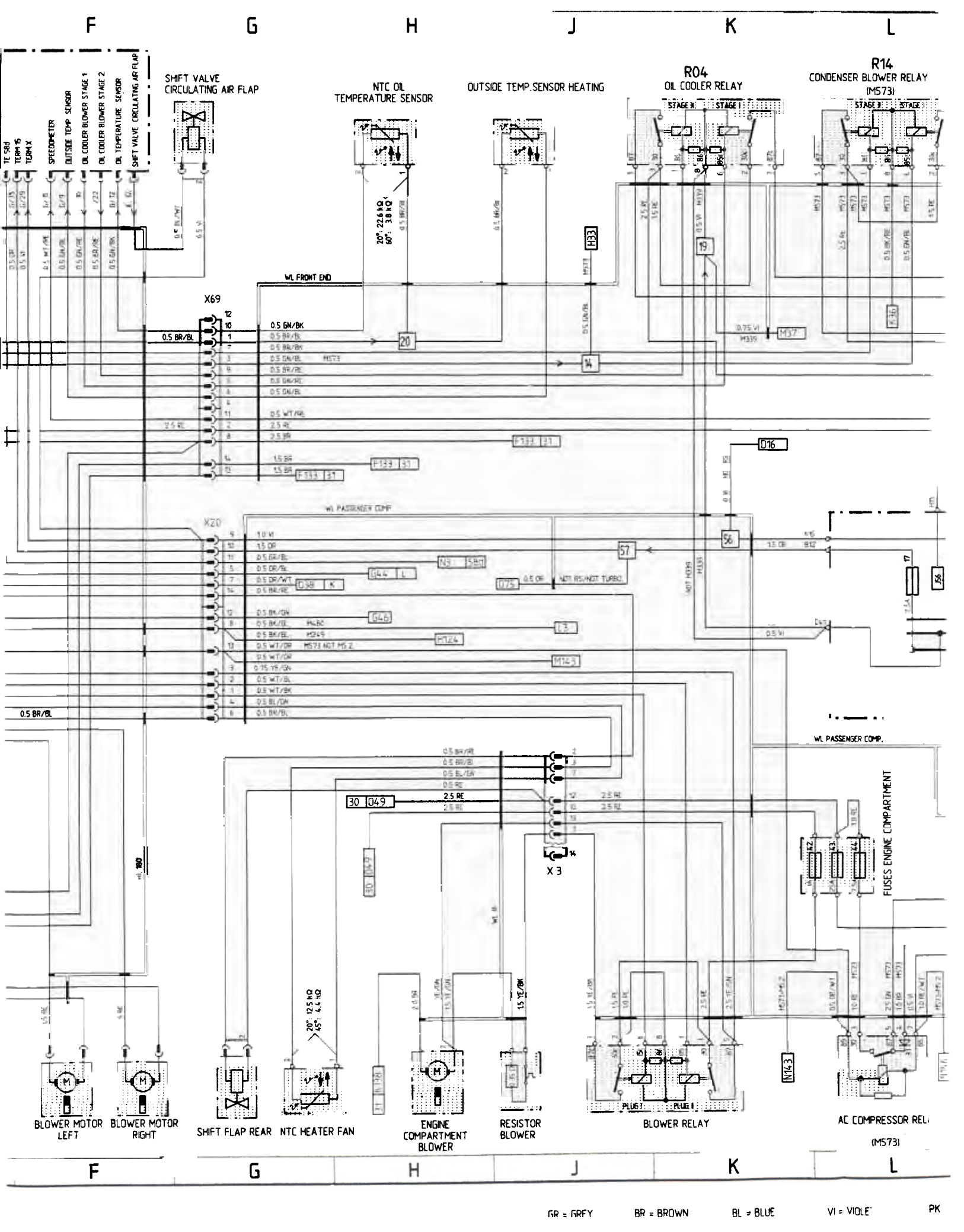
F
G
H
J
K
L
SHIFT VALVE CIRCULATING AIR FLAP
NTC OIL TEMPERATURE SENSOR
OUTSIDE TEMP.SENSOR HEATING
R04
OIL COOLER RELAY
R14
CONDENSER BLOWER RELAY
(M573)
STAGE 3
STAGE 1
STAGE 2
TE 58d
TERM 15
TERM X
SPEEDOMETER
OUTSIDE TEMP. SENSOR
OIL COOLER BLOWER STAGE 1
OIL COOLER BLOWER STAGE 2
OIL TEMPERATURE SENSOR
SHIFT VALVE CIRCULATING AIR FLAP
20°: 22.6 kΩ
60°: 3.8 kΩ
WL FRONT END
X69
0.5 BR/BL
0.5 GN/BK
0.5 BR/BK
0.5 GN/BL
0.5 BR/RE
0.5 GN/RE
0.5 GN/WT
0.5 WT/RE
2.5 RE
1.5 BR
WL PASSENGER COMP.
X20
1.0 VI
1.5 OR
0.5 GR/BL
0.5 OR/BL
0.5 OR/WT
0.5 BR/RE
0.5 BK/GN
0.5 BK/YE
0.5 BK/BL
0.5 WT/OR
0.75 YE/GN
0.5 WT/BL
0.5 WT/BK
0.5 BL/GN
0.5 BK/BL
0.5 BR/BL
NOT RS/NOT TURBO
NOT M54
M54
M73
M73.2
WL PASSENGER COMP.
30 049
2.5 RE
X 3
FUSES ENGINE COMPARTMENT
BLOWER MOTOR LEFT
BLOWER MOTOR RIGHT
SHIFT FLAP REAR
NTC HEATER FAN
20°: 12.5 kΩ
45°: 4.4 kΩ
ENGINE COMPARTMENT BLOWER
RESISTOR BLOWER
BLOWER RELAY
PLUG I
PLUG II
AC COMPRESSOR REL
(M573)
GR = GREY
BR = BROWN
BL = BLUE
VI = VIOLE
PK

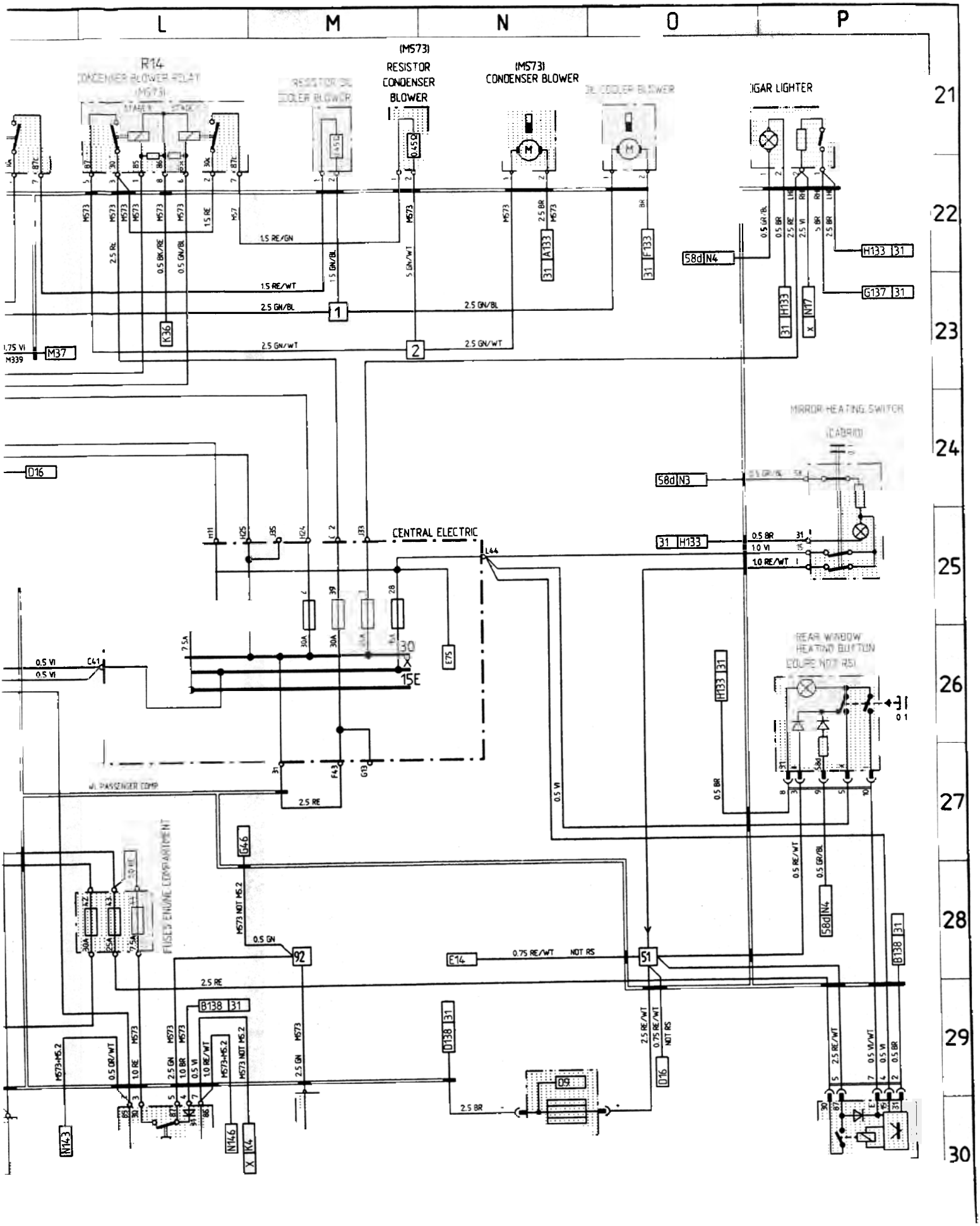
L
M
N
O
P
21
22
23
24
25
26
27
28
29
30
R14
CONDENSER BLOWER RELAY
(M573)
STAGE 1
STAGE 2
RESISTOR OIL COOLER BLOWER
(M573)
RESISTOR
CONDENSER
BLOWER
(M573)
CONDENSER BLOWER
OIL COOLER BLOWER
CIGAR LIGHTER
MIRROR HEATING SWITCH
(CABRIO)
CENTRAL ELECTRIC
REAR WINDOW
HEATING BUTTON
COUPE NOT RS)
FUSES ENGINE COMPARTMENT
WL PASSENGER COMP
1.5 RE/GN
1.5 RE/WT
2.5 GN/BL
2.5 GN/WT
1.5 GN/BL
5 GN/WT
2.5 BR
0.5 BR
1.0 VI
1.0 RE/WT
0.5 VI
2.5 RE
0.5 GN
0.75 RE/WT
NOT RS
M573 NOT M5.2
M573+M5.2
0.5 GR/WT
1.0 RE
2.5 GN
1.0 BR
0.5 VI
1.0 RE/WT
2.5 RE/WT
0.75 RE/WT
NOT RS
0.5 GR/BL
0.5 RE/WT
0.5 VI/WT
0.5 VI
0.5 BR
58d N4
58d N3
H133 31
G137 31
A133
F133
K36
M37
M339
D16
C41
E75
G46
92
51
E14
B138 31
D138 31
D9
N143
N146
K4
N17
30
15E

911 Carrera 993 MODEL 95/2 SHEET 4 A

ABS

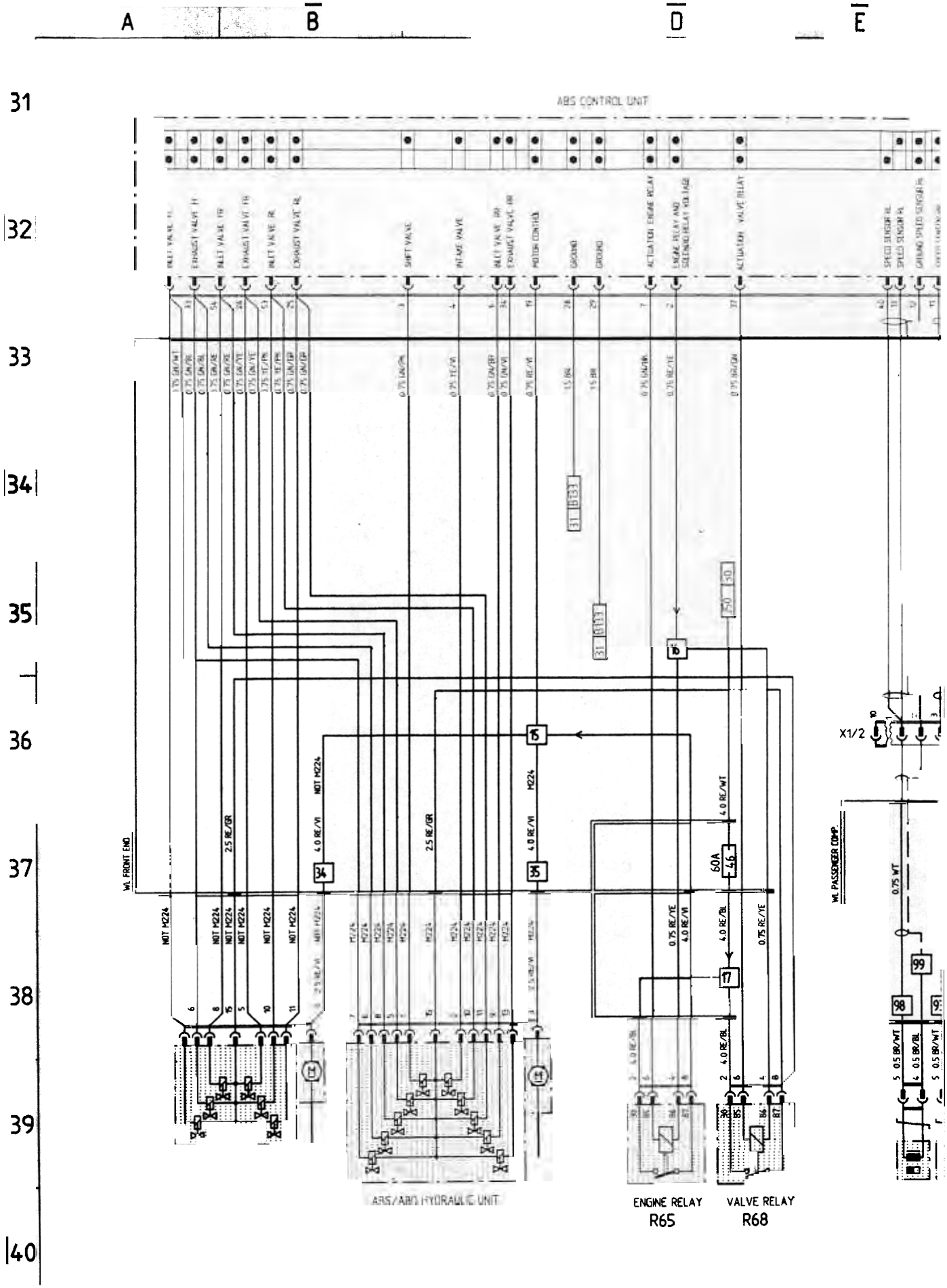

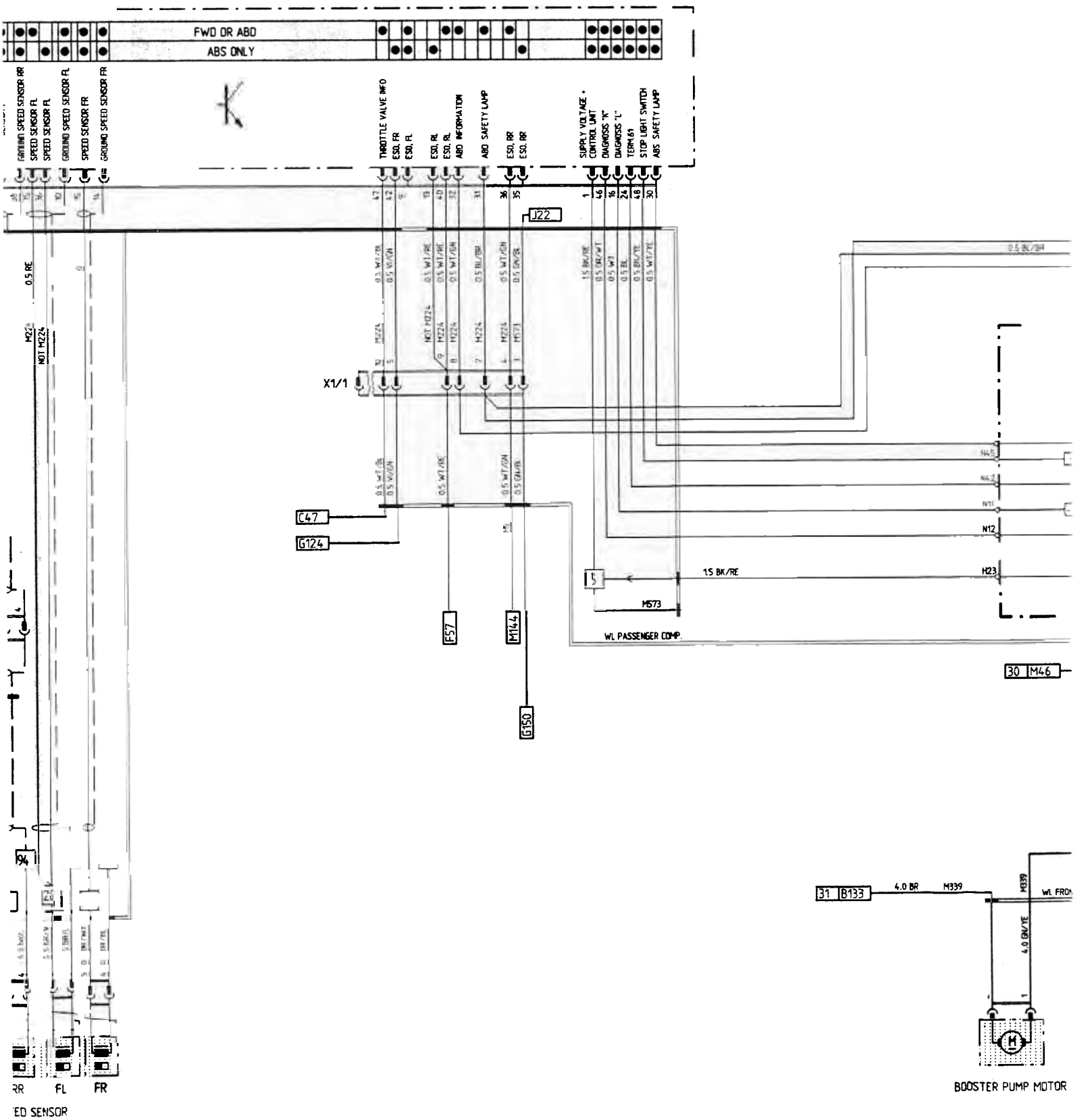

WT = WHITE RE = RED GN = GREEN YE = YELLOW GR = GREY BR = BROWN BL = BLUE VI = VIOLET

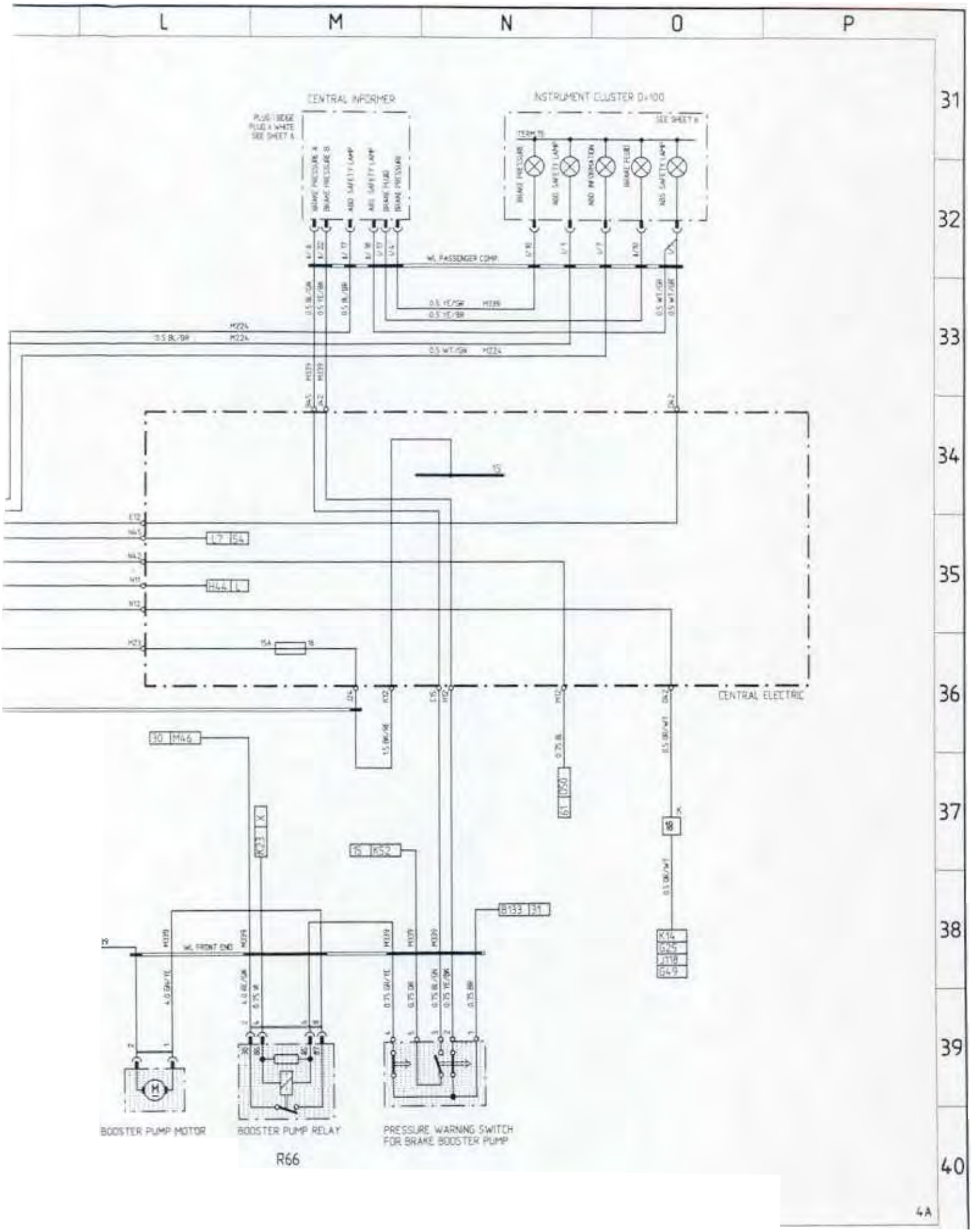
L
M
N
O
P
31
32
33
34
35
36
37
38
39
40
CENTRAL INFORMER
INSTRUMENT CLUSTER D+100
W1 PASSENGER COMP.
CENTRAL ELECTRIC
W1 FRONT END
BOOSTER PUMP MOTOR
BOOSTER PUMP RELAY
PRESSURE WARNING SWITCH FOR BRAKE BOOSTER PUMP
R66
4A

911 Carrera (993) MODEL 95/2 SHEET 4B

ABS (RS)

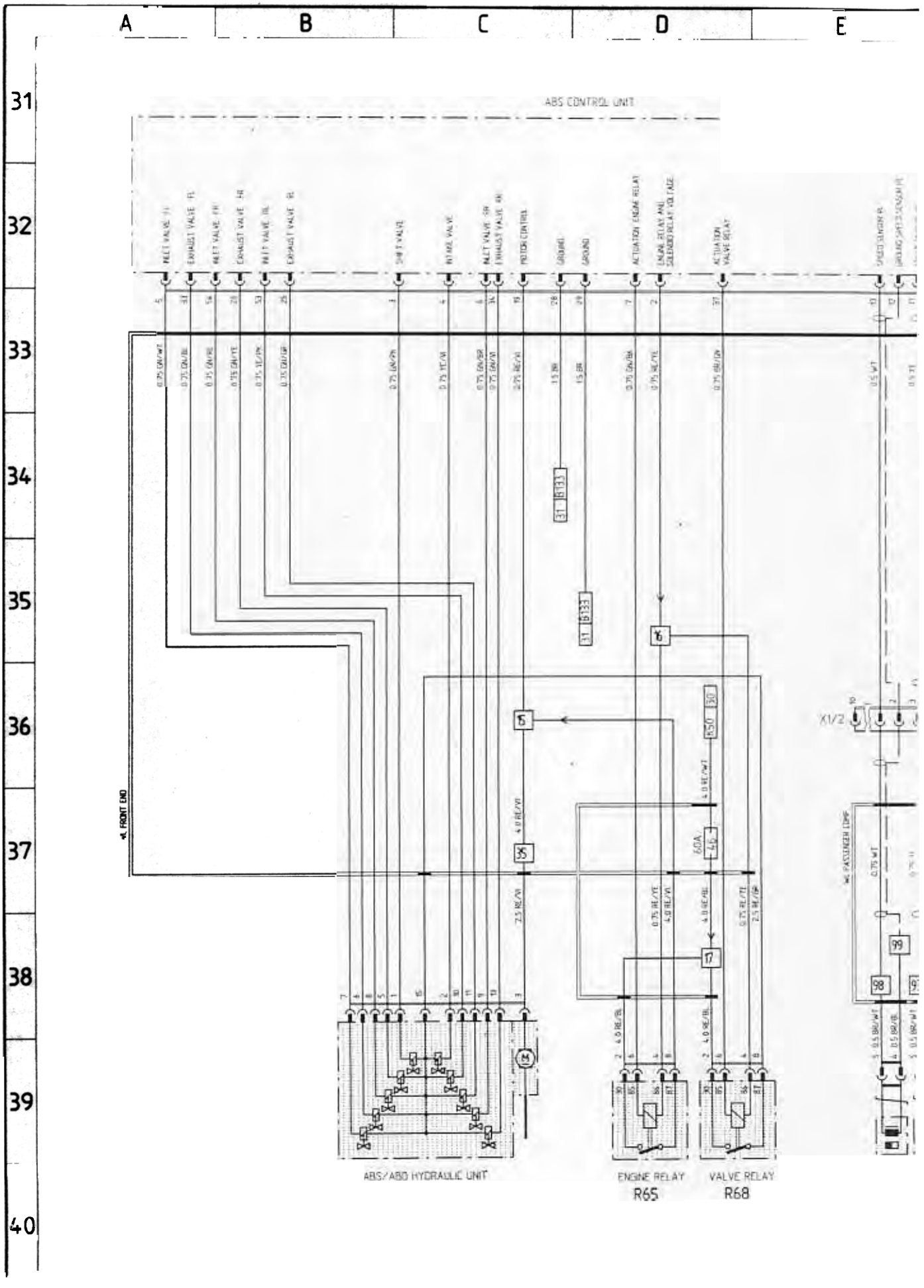

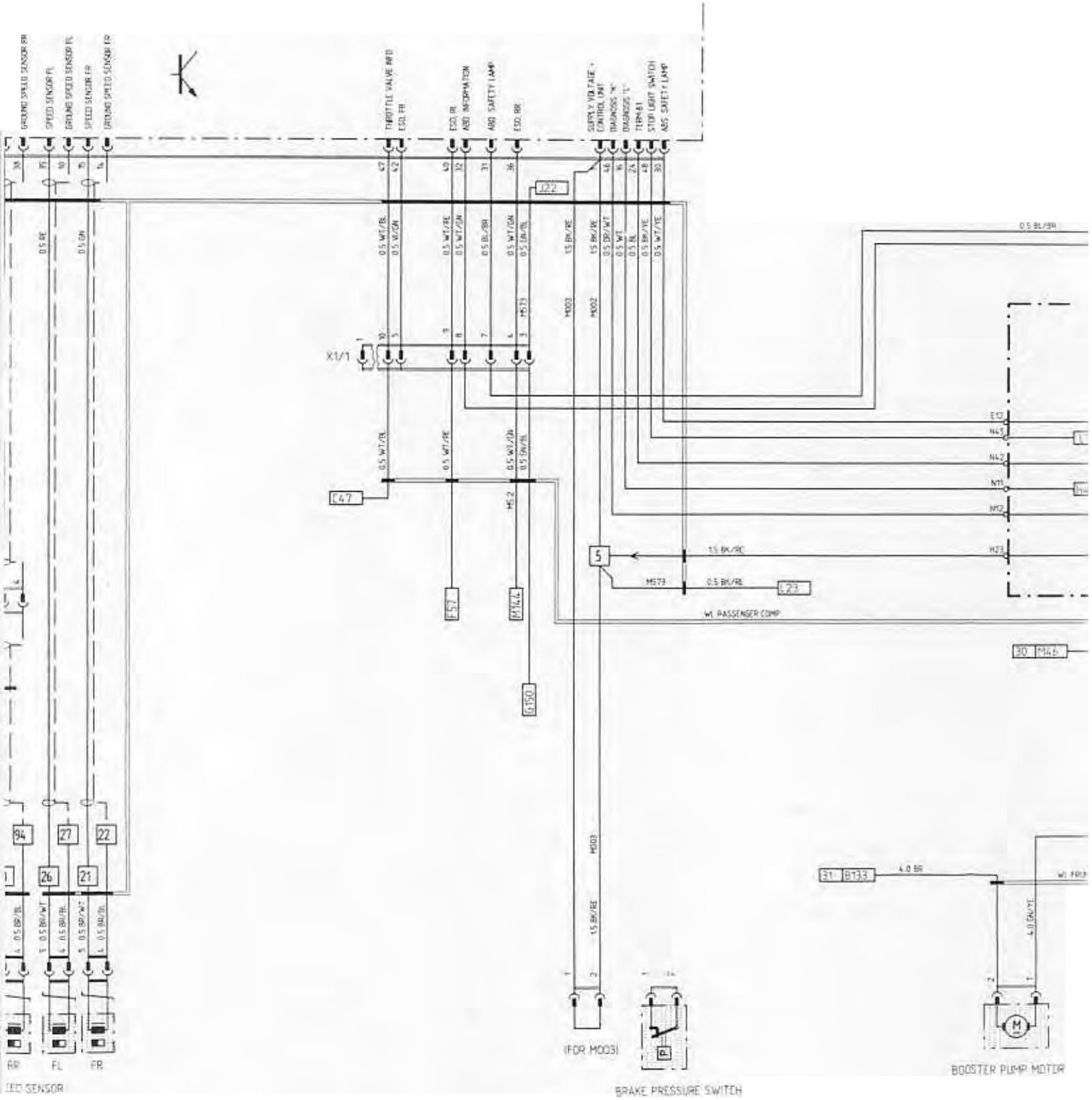

F	G	H	J	K	L

BK = BLACK WT = WHITE RE = RED GN = GREEN YE = YELLOW GR = GREY BR = BROWN BL = BLUE VI = VIOLET

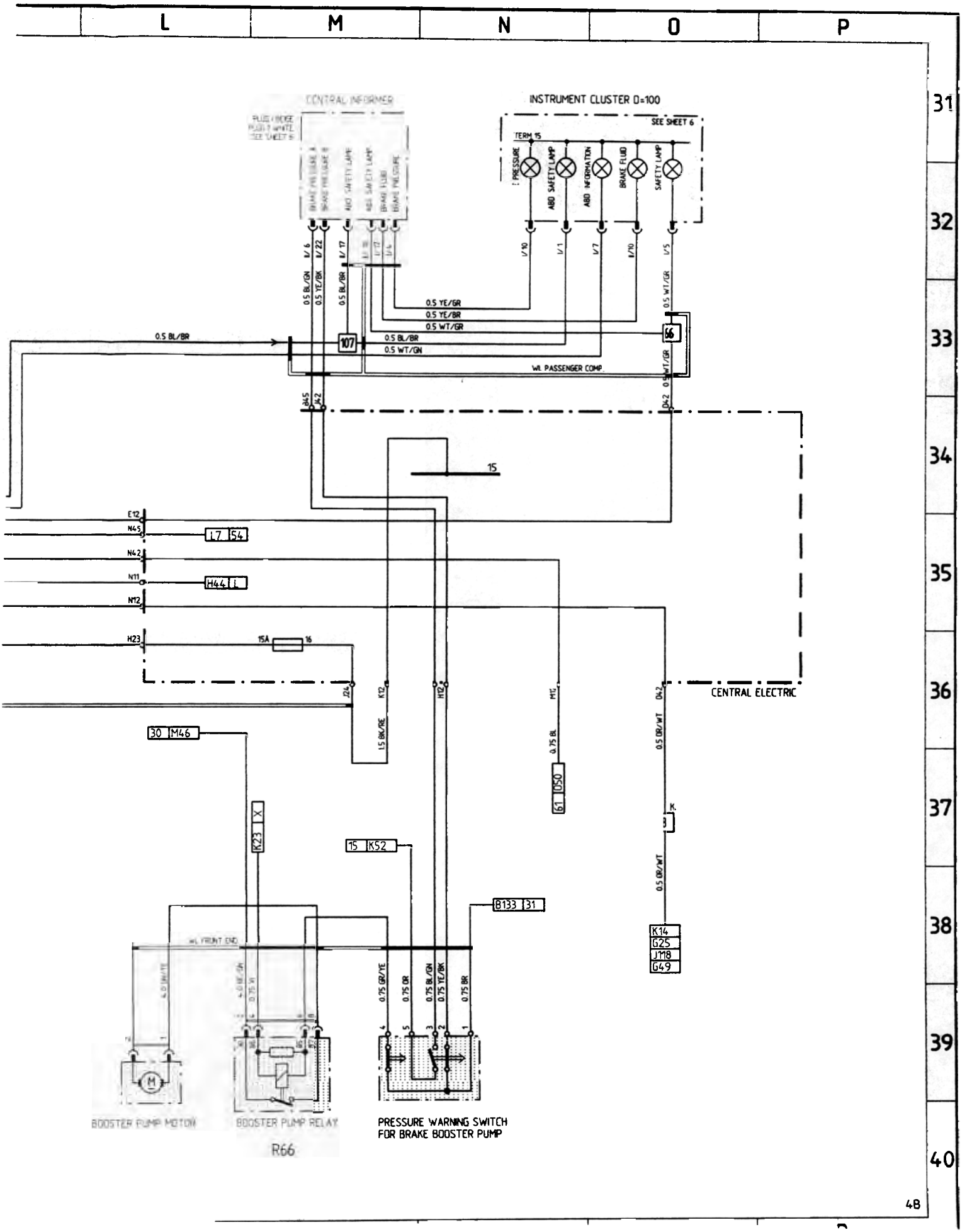
L
M
N
O
P
31
32
33
34
35
36
37
38
39
40
CENTRAL INFORMER
INSTRUMENT CLUSTER D=100
SEE SHEET 6
TERM 15
PRESSURE
ABD SAFETY LAMP
ABD INFORMATION
BRAKE FLUID
SAFETY LAMP
0.5 BL/GN
0.5 YE/BK
0.5 BL/BR
0.5 YE/GR
0.5 YE/BR
0.5 WT/GR
0.5 WT/GN
107
56
W1 PASSENGER COMP.
15
E12
N45
N42
N11
N12
H23
15A
16
L7 S4
H44 1
CENTRAL ELECTRIC
30 M46
K23 X
15 K52
B133 31
W1 FRONT END
0.75 GR/YE
0.75 OR
0.75 BL/GN
0.75 YE/BK
0.75 BR
0.75 BL
G1 D50
0.5 OR/WT
K14
G25
J118
G49
BOOSTER PUMP MOTOR
BOOSTER PUMP RELAY
R66
PRESSURE WARNING SWITCH
FOR BRAKE BOOSTER PUMP

911 Carrera (993) MODEL 95/2 SHEET 5 A

ENGINE ELECTRICS M2.10, FUEL, IGNITION SYSTEM, CRUISE CONTROL

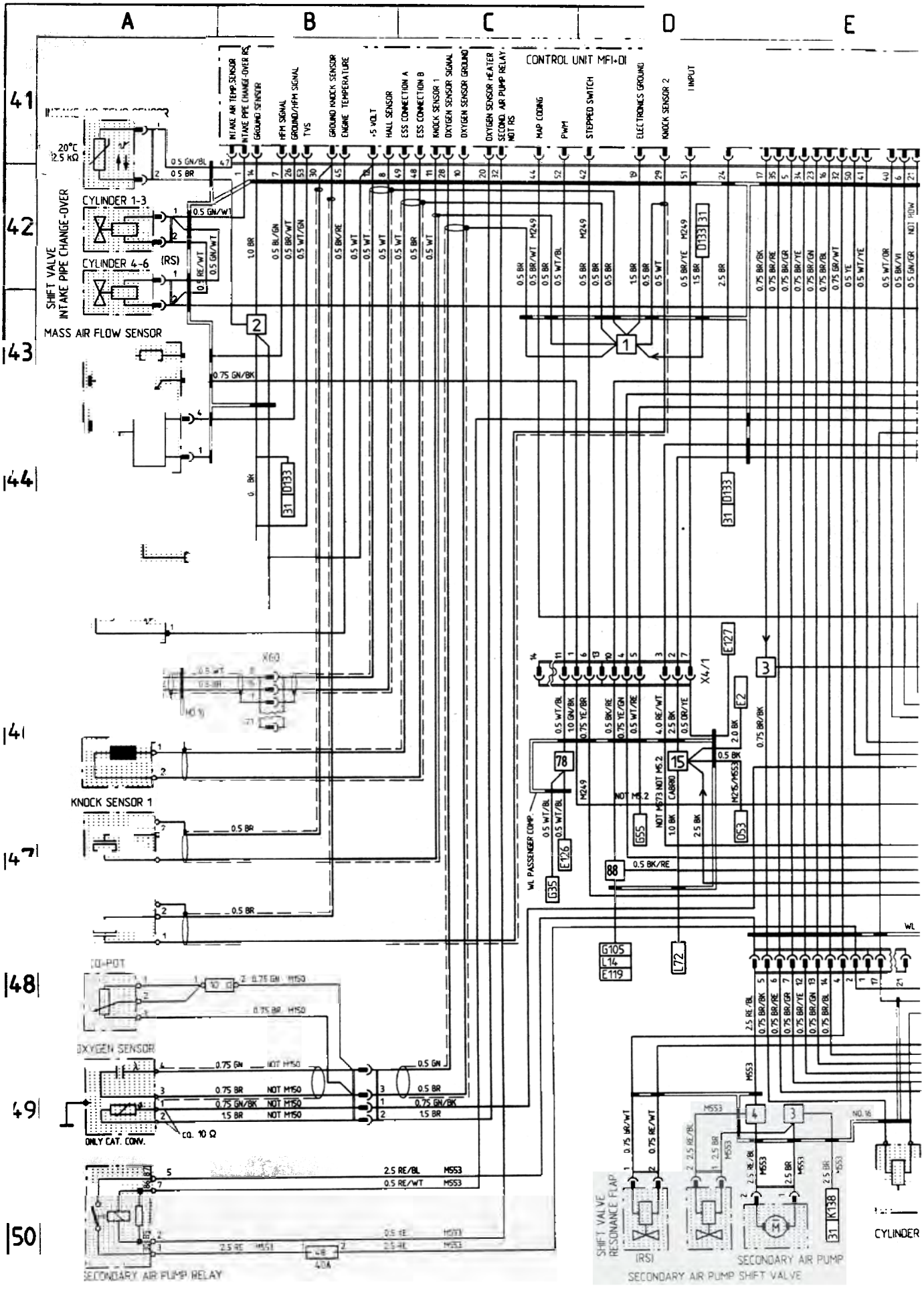
A
B
C
D
E
41
42
43
44
45
47
48
49
50
CONTROL UNIT MFI-DI
INTAKE AIR TEMP SENSOR
INTAKE PIPE CHANGE-OVER RS
GROUND SENSOR
HFM SIGNAL
GROUND/HFM SIGNAL
TVS
GROUND KNOCK SENSOR
ENGINE TEMPERATURE
+5 VOLT
HALL SENSOR
ESS CONNECTION A
ESS CONNECTION B
KNOCK SENSOR 1
OXYGEN SENSOR SIGNAL
OXYGEN SENSOR GROUND
OXYGEN SENSOR HEATER
SECOND. AIR PUMP RELAY
NOT RS
MAP COOING
PWM
STEPPED SWITCH
ELECTRONICS GROUND
KNOCK SENSOR 2
INPUT
20°C
2.5 kΩ
SHIFT VALVE
INTAKE PIPE CHANGE-OVER
CYLINDER 1-3
CYLINDER 4-6
(RS)
MASS AIR FLOW SENSOR
KNOCK SENSOR 1
X60
X4/1
E127
E2
G105
L14
E119
L72
G35
E126
G55
053
WL PASSENGER COMP.
CO-POT
OXYGEN SENSOR
ONLY CAT. CONV.
ca. 10 Ω
SECONDARY AIR PUMP RELAY
SHIFT VALVE RESONANCE FLAP
(RS)
SECONDARY AIR PUMP
SECONDARY AIR PUMP SHIFT VALVE
CYLINDER
WL
M553
M249
NOT M150
NOT M2.2
NOT M5.2
NOT M5.2 NOT M5.2
NOT M73 NOT M5.2
CA800
M26/M553
0.5 GN/BL
0.5 BR
0.5 GN/WT
0.5 RE/WT
1.0 BR
0.5 BL/GN
0.5 BR/WT
0.5 WT/GN
0.5 BK/RE
0.5 WT
0.75 GN/BK
0 BK
0.5 WT/BL
10 GN/BK
0.75 YE/BR
0.75 YE/GN
0.5 WT/RE
4.0 RE/WT
2.5 BK
0.5 GR/YE
2.0 BK
1.0 BK
0.75 GN
0.75 BR
0.75 GN/BK
1.5 BR
2.5 RE/BL
0.5 RE/WT
2.5 RE
40A
0.75 BK/BK
0.75 BK/RE
0.75 BK/GR
0.75 BR/YE
0.75 BR/GN
0.75 BR/BL
0.75 GR/WT
0.5 YE
0.5 WT/YE
0.5 WT/OR
0.5 BK/VI
0.5 GN/GR
0.75 BK/WT
0.75 RE/WT
2.5 BR
1.5 BK
1.5 BR
2.5 BK
2.5 BR
0.5 BR/WT
0.5 WT/BL
0.5 BR/YE
0.5 BR/GN
0.5 BR/BL
0.5 BR/VI
0.5 BR/GR
0.5 BR/OR
0.5 BR/RS
0.5 BR/BK
0.5 BR/RE
0.5 BR/YE
0.5 BR/WT
0.5 BR/BL
0.5 BR/GR
0.5 BR/OR
0.5 BR/VI
0.5 BR/GN

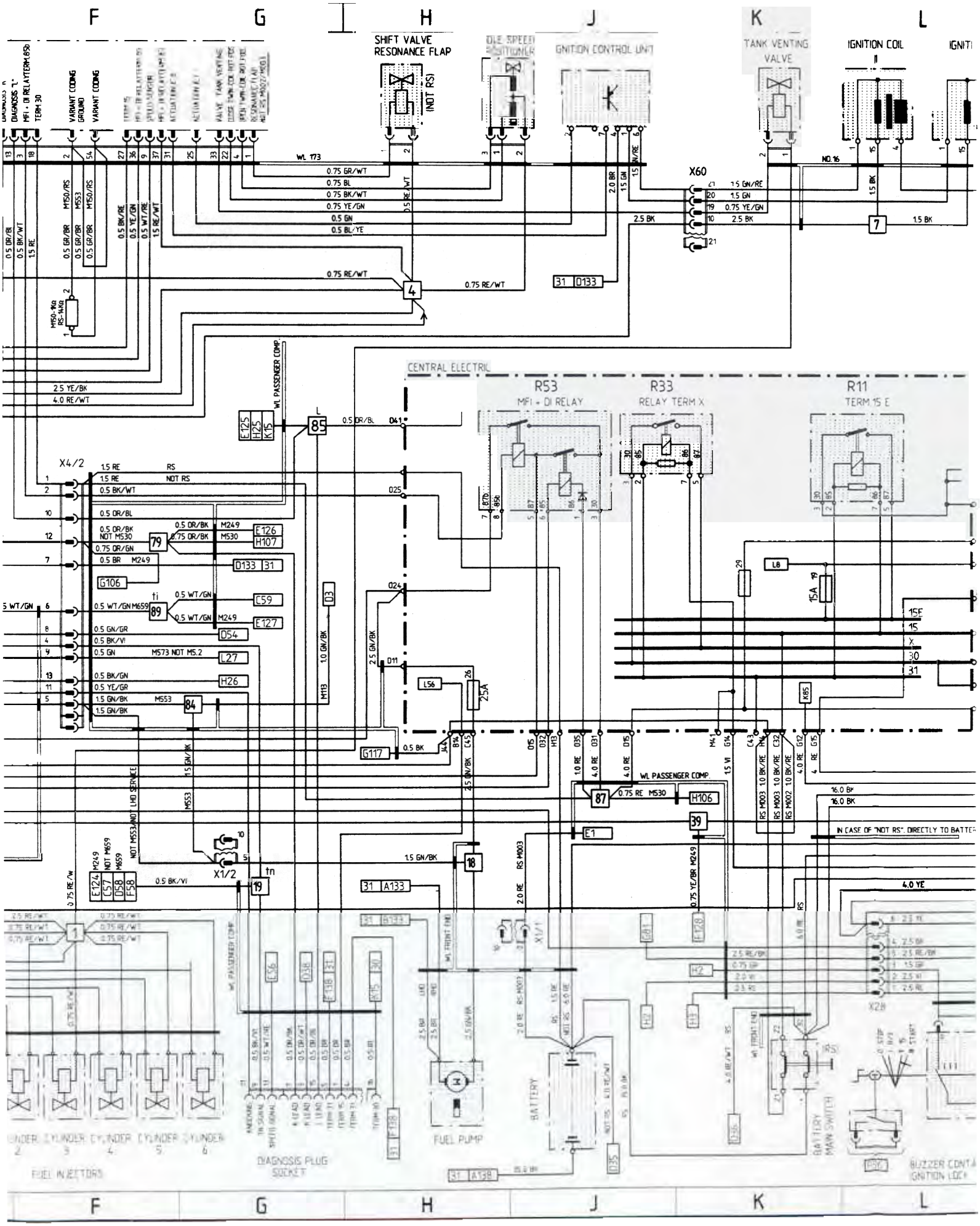

WHITE RE = RED GN = GREEN YELLOW GR = GREY BR = BROWN VIOLET

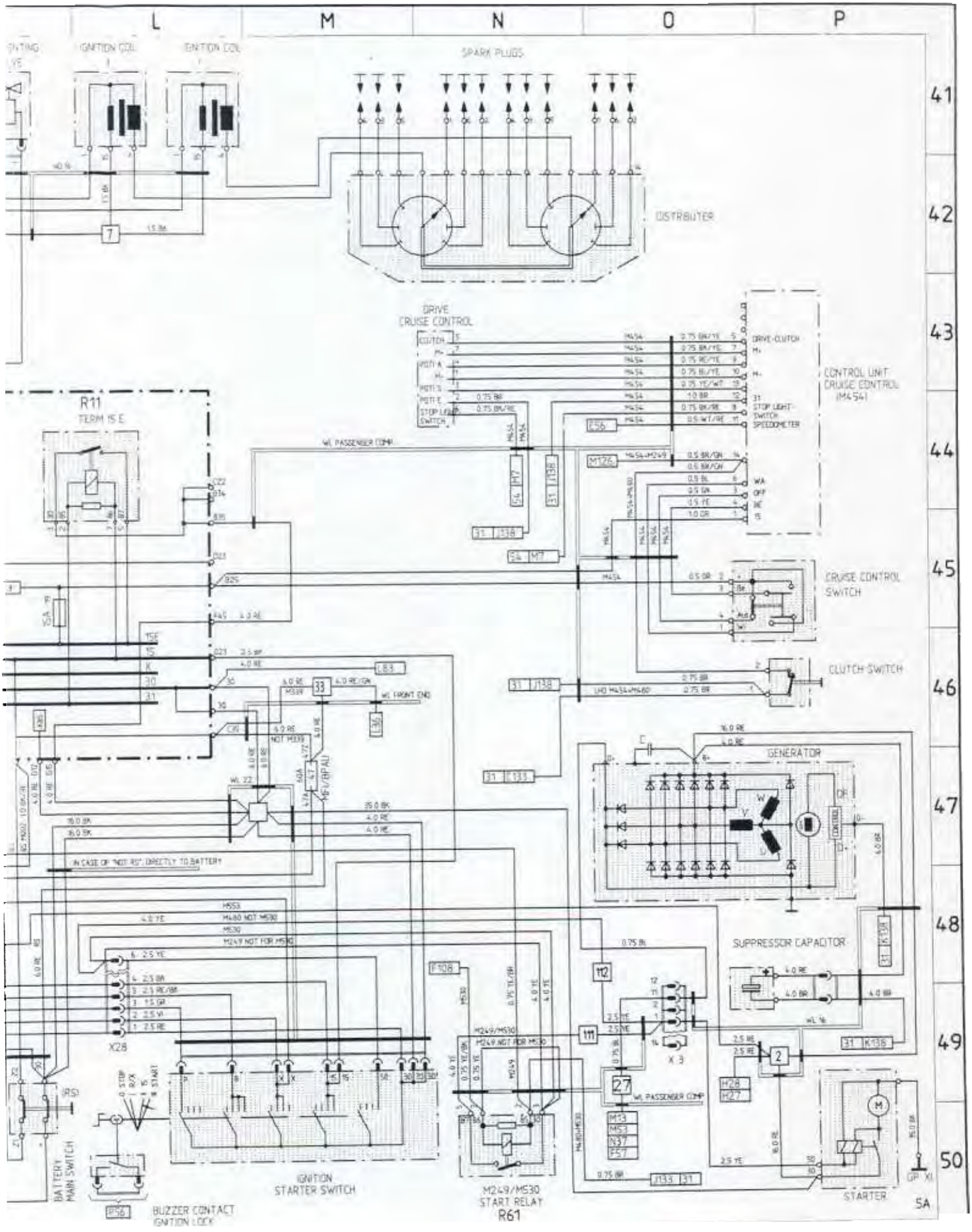
L
M
N
O
P
41
42
43
44
45
46
47
48
49
50
SPARK PLUGS
DISTRIBUTER
DRIVE CRUISE CONTROL
CONTROL UNIT CRUISE CONTROL (M454)
DRIVE-CLUTCH
STOP LIGHT SWITCH SPEEDOMETER
CRUISE CONTROL SWITCH
CLUTCH SWITCH
GENERATOR
SUPPRESSOR CAPACITOR
STARTER
R11
TERM 15 E
W. PASSENGER COMP.
W. FRONT END
IN CASE OF "NOT 15", DIRECTLY TO BATTERY
X28
X 3
BATTERY MAIN SWITCH
IGNITION STARTER SWITCH
BUZZER CONTACT IGNITION LOCK
M249/M530 START RELAY R61
5A

911 Carrera (993) MODEL 95/2 SHEET 6

INSTRUMENTS AND SENSOR

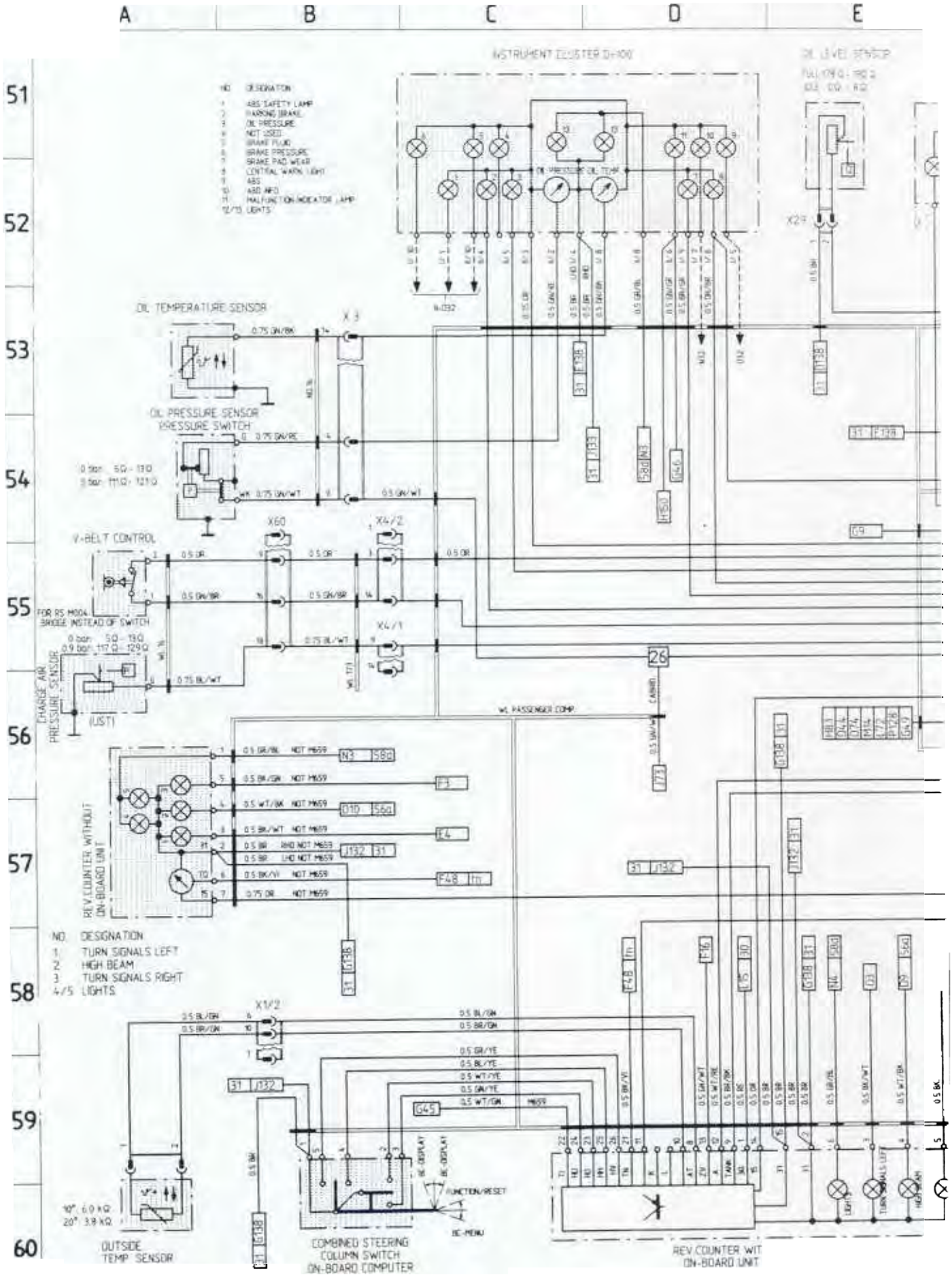

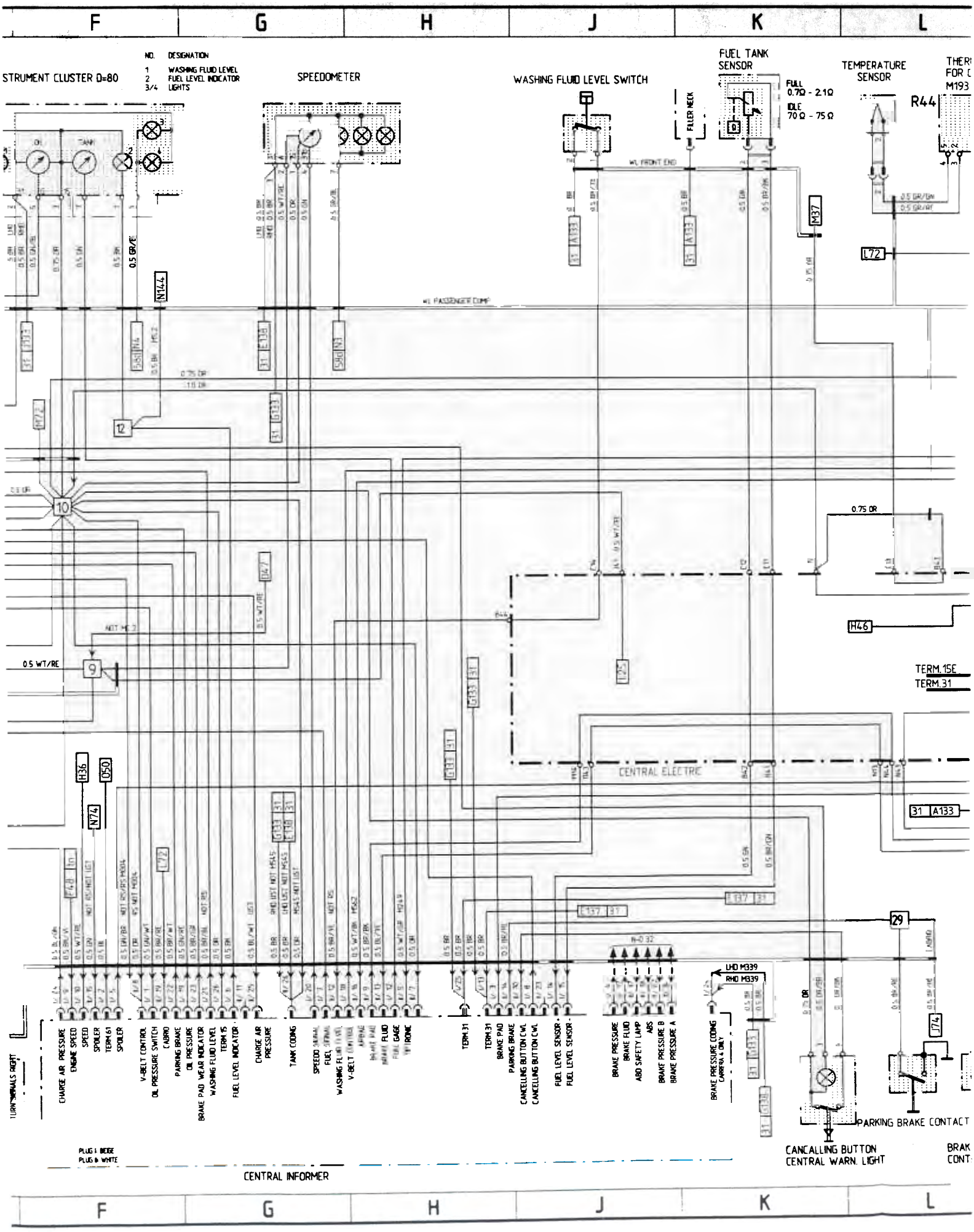

F
G
H
J
K
L
NO. DESIGNATION
1 WASHING FLUID LEVEL
2 FUEL LEVEL INDICATOR
3/4 LIGHTS
STRUMENT CLUSTER D=80
SPEEDOMETER
WASHING FLUID LEVEL SWITCH
FUEL TANK SENSOR
FULL 0.7Ω - 2.1Ω
IDLE 70 Ω - 75 Ω
FILLER NECK
TEMPERATURE SENSOR
R44
M193
WL FRONT END
WL PASSENGER COMP
M37
L72
N144
0.75 DR
0.5 WT/RE
H46
TERM.15E
TERM.31
CENTRAL ELECTRIC
H36
D50
N74
A133
LHD M339
RHD M339
CHARGE AIR PRESSURE
ENGINE SPEED
SPEED
SPOILER
TERM.61
SPOILER
V-BELT CONTROL
OIL PRESSURE SWITCH
CABRO
PARKING BRAKE
OIL PRESSURE
BRAKE PAD WEAR INDICATOR
WASHING FLUID LEVEL
TERM 15
FUEL LEVEL INDICATOR
CHARGE AIR PRESSURE
TANK CODING
SPEED
FUEL
WASHING FLUID LEVEL
V-BELT
BRAKE PAD
BRAKE FLUID
FUEL GAGE
TERM.31
TERM.31
BRAKE PAD
PARKING BRAKE
CANCELLING BUTTON CWL
CANCELLING BUTTON CWL
FUEL LEVEL SENSOR
FUEL LEVEL SENSOR
BRAKE PRESSURE
BRAKE FLUID
ABD SAFETY LAMP
ABS
BRAKE PRESSURE B
BRAKE PRESSURE A
BRAKE PRESSURE CODING
CARRFOR 4 ONLY
J74
PARKING BRAKE CONTACT
CANCALLING BUTTON
CENTRAL WARN. LIGHT
BRAK
CONT
PLUG I BEIGE
PLUG II WHITE
CENTRAL INFORMER

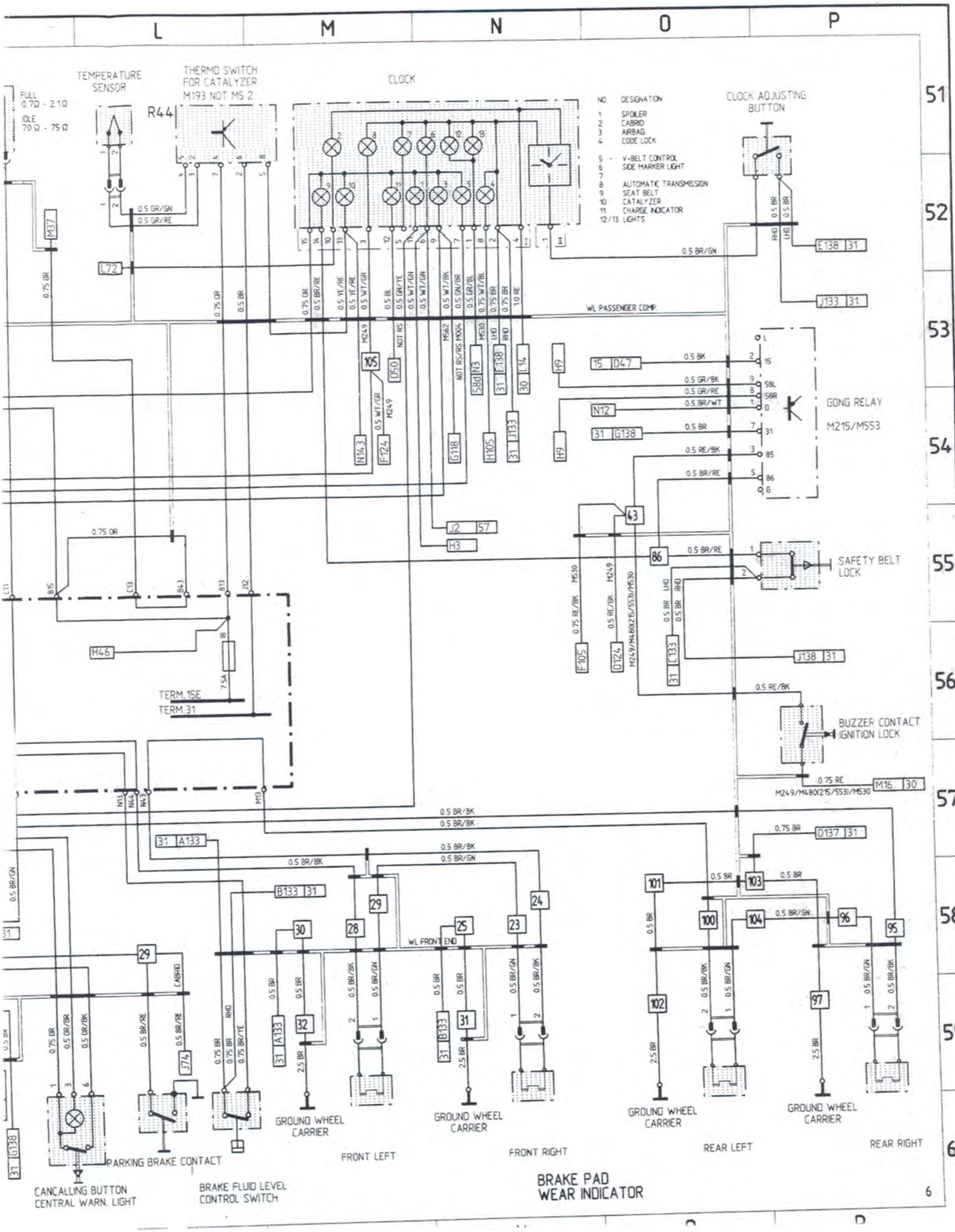
L
M
N
O
P
51
52
53
54
55
56
57
58
59
60
TEMPERATURE SENSOR
FULL 0.7Ω - 2.1Ω
IDLE 70Ω - 75Ω
THERMO SWITCH FOR CATALYZER M193 NOT M5.2
R44
CLOCK
NO. DESIGNATION
1 SPOILER
2 CABRIO
3 AIRBAG
4 CODE LOCK
5 V-BELT CONTROL
6 SIDE MARKER LIGHT
7
8 AUTOMATIC TRANSMISSION
9 SEAT BELT
10 CATALYZER
11 CHARGE INDICATOR
12/13 LIGHTS
CLOCK ADJUSTING BUTTON
WL PASSENGER COMP.
GONG RELAY M215/M553
SAFETY BELT LOCK
BUZZER CONTACT IGNITION LOCK
TERM.15E
TERM.31
WL FRONT END
PARKING BRAKE CONTACT
CANCALLING BUTTON CENTRAL WARN. LIGHT
BRAKE FLUID LEVEL CONTROL SWITCH
GROUND WHEEL CARRIER
FRONT LEFT
FRONT RIGHT
REAR LEFT
REAR RIGHT
BRAKE PAD WEAR INDICATOR
6

911 Carrera (993) MODEL 95/2 SHEET 7

SEATS

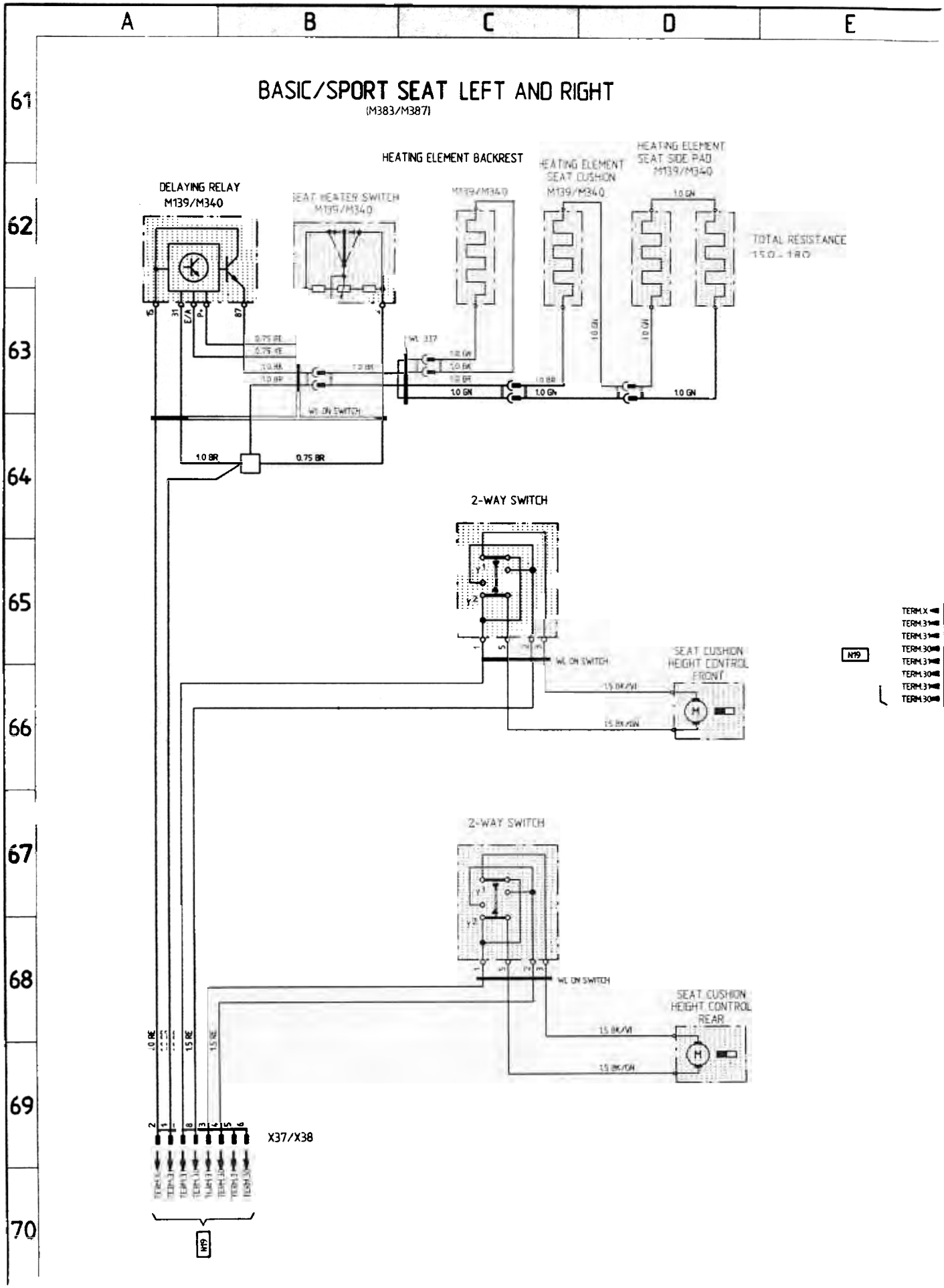

F G H J K

61 62 63 64 65 66 67 68 69 70

COMFORT SEAT LEFT AND RIGHT

(M437,M438)

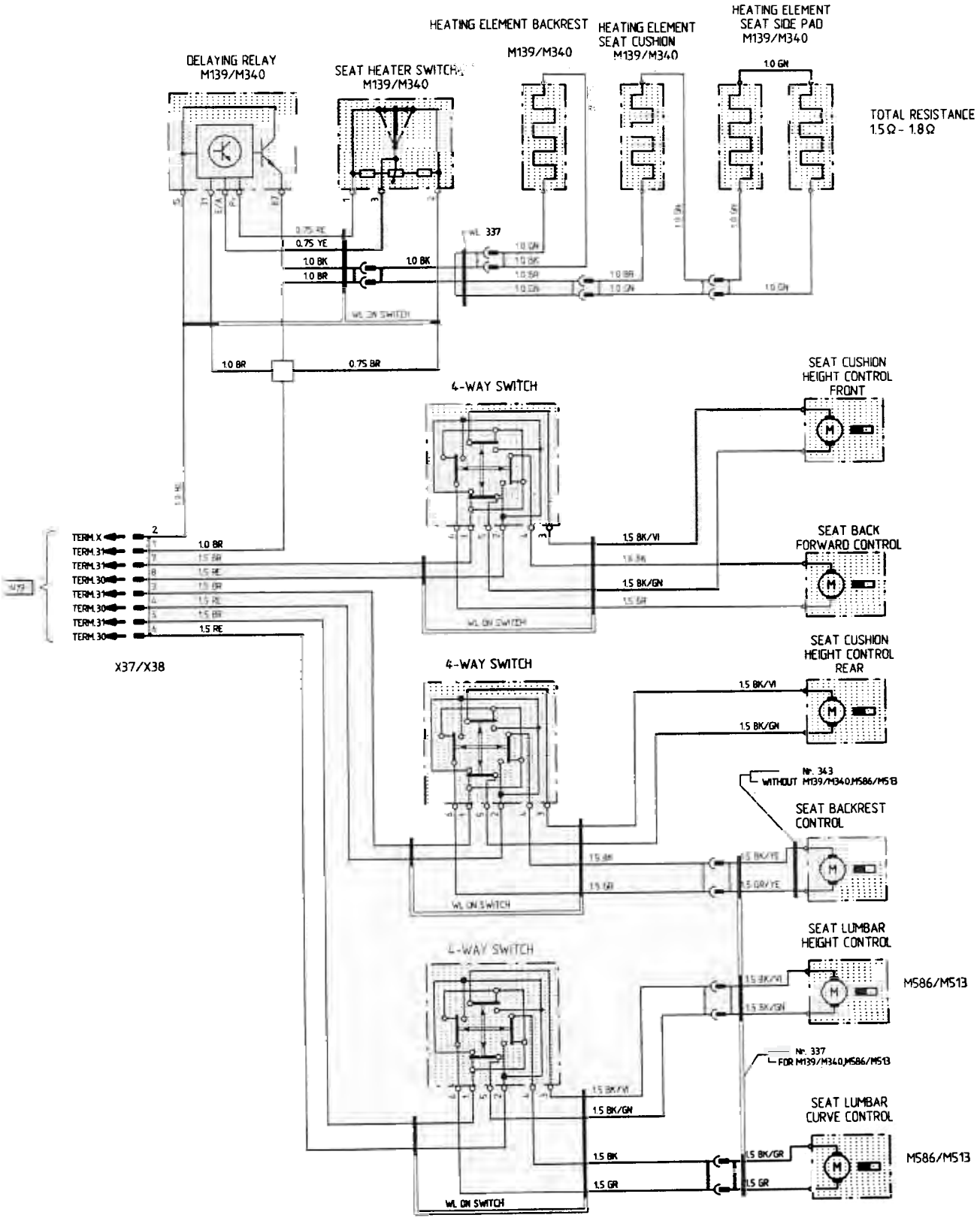

911 Carrera (993) MODEL 95/2 SHEET 8

REAR SPOILER, TWO-TONE HORNS, WIPE- AND WASH CLEANERS, SUN ROOF, CONVERTIBLE TOP

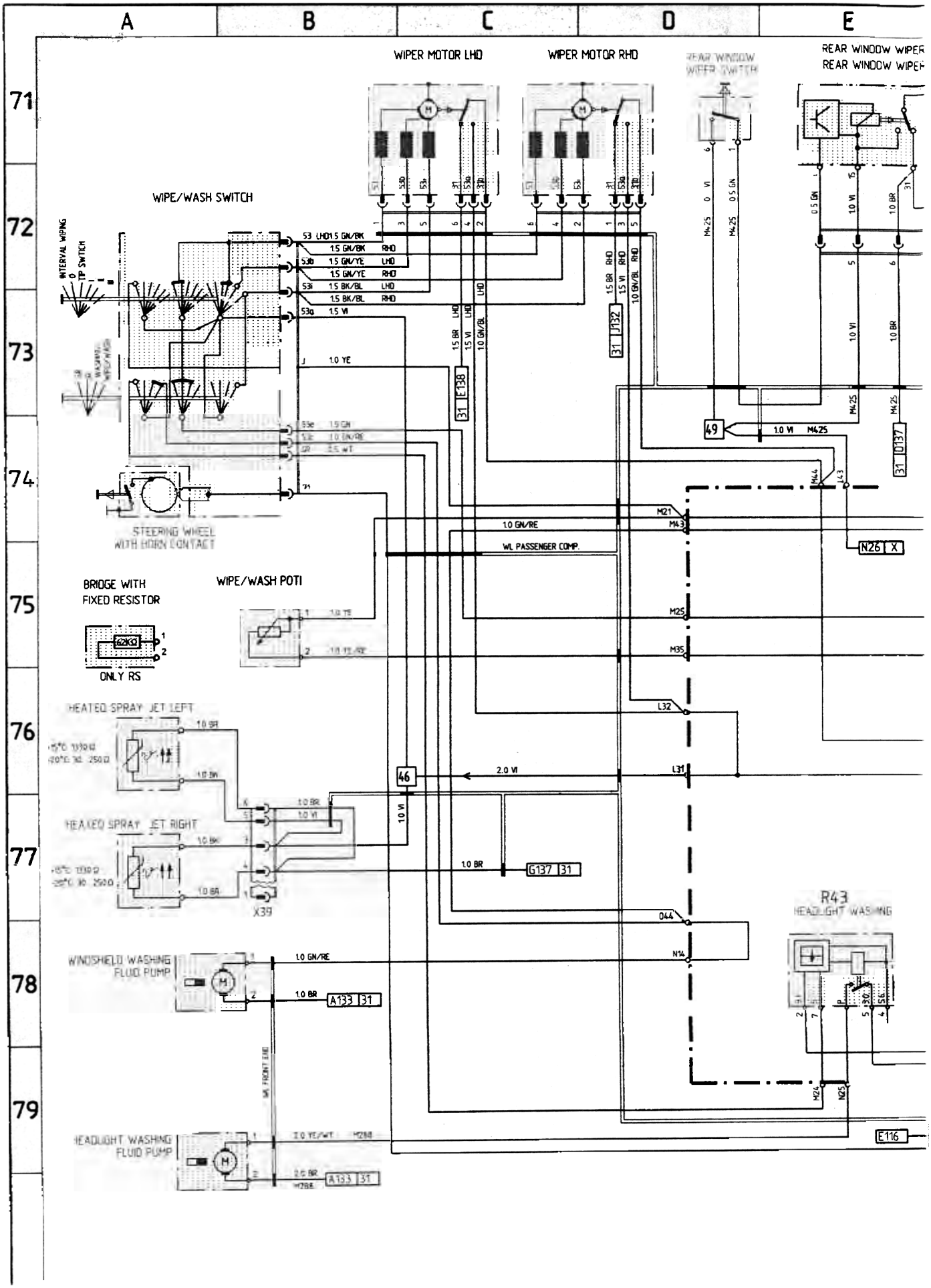

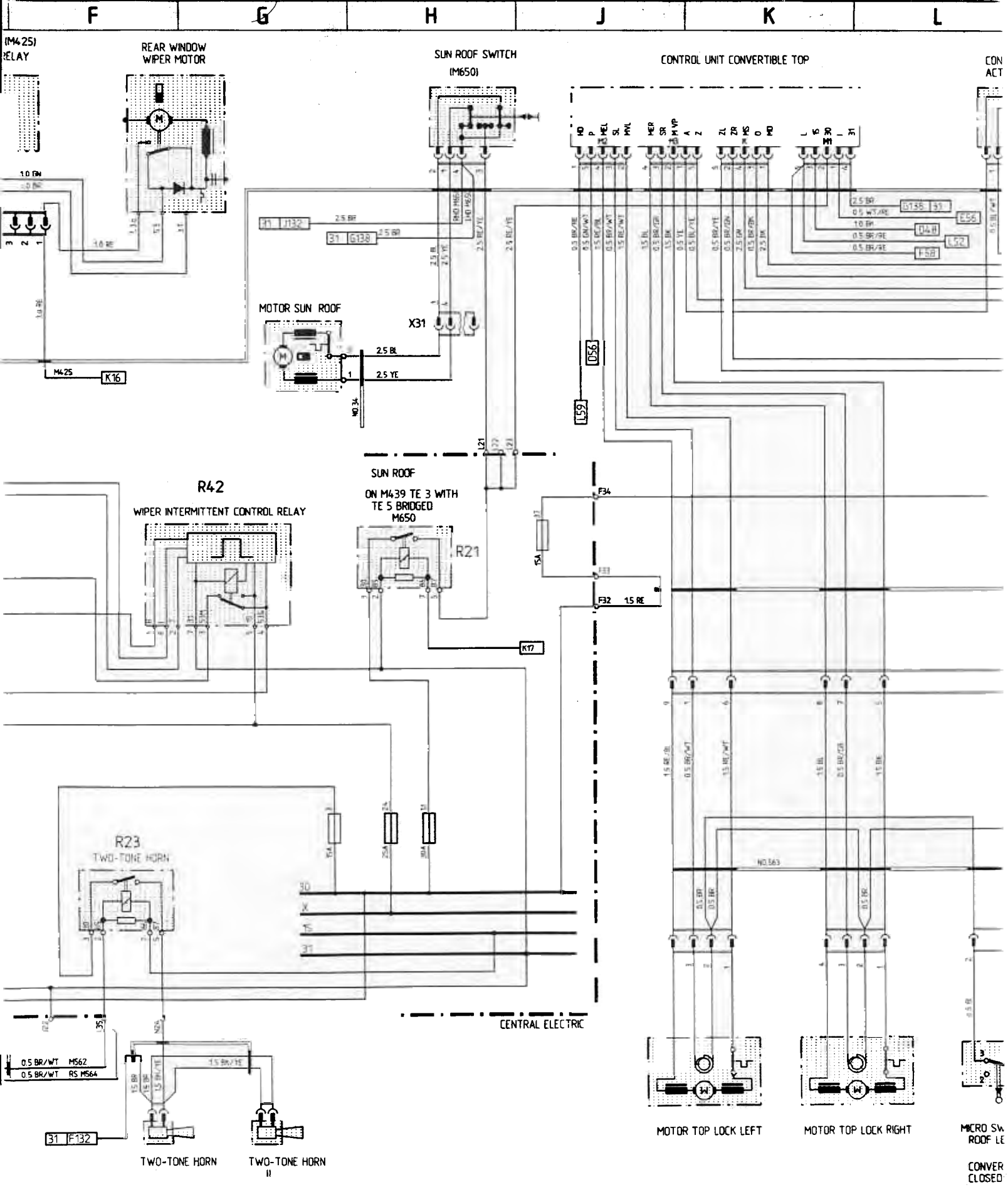
F
G
H
J
K
L
(M425)
RELAY
REAR WINDOW
WIPER MOTOR
SUN ROOF SWITCH
(M650)
CONTROL UNIT CONVERTIBLE TOP
MOTOR SUN ROOF
X31
M425
K16
D56
L59
SUN ROOF
ON M439 TE 3 WITH
TE 5 BRIDGED
M650
R21
K17
R42
WIPER INTERMITTENT CONTROL RELAY
F34
15A
F33
F32 1.5 RE
R23
TWO-TONE HORN
CENTRAL ELECTRIC
0.5 BR/WT M562
0.5 BR/WT RS M564
31 F132
TWO-TONE HORN
TWO-TONE HORN
II
MOTOR TOP LOCK LEFT
MOTOR TOP LOCK RIGHT
MICRO SW
ROOF LE
CONVER
CLOSED
BK = BLACK
WT = WHITE
RE = RED
GN = GREEN
YE = YELLOW
GR = GREY
BR = BROWN
BL = BLUE
VI = VIOLET
PK = PINK

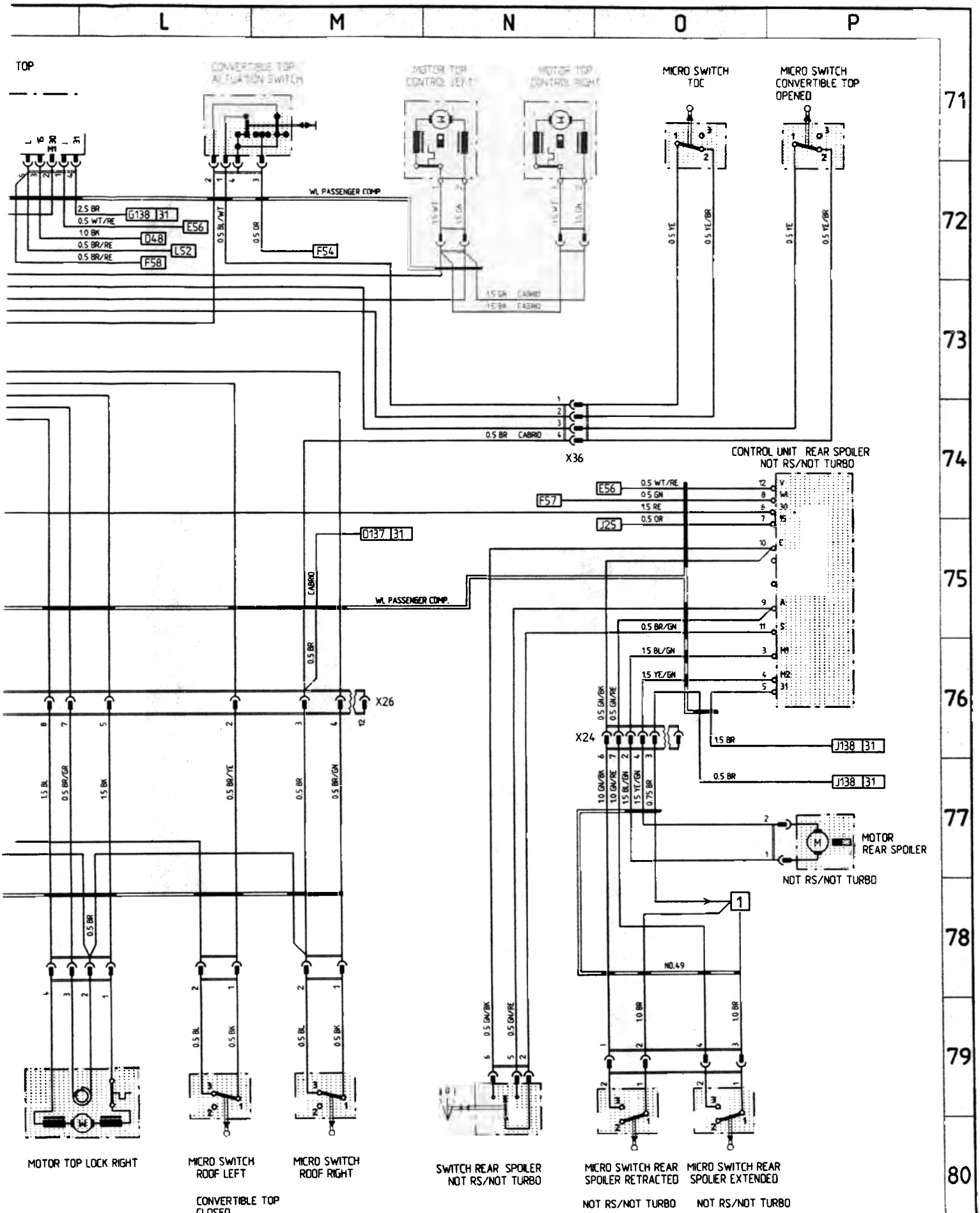
L
M
N
O
P
71
72
73
74
75
76
77
78
79
80
TOP
CONVERTIBLE TOP ACTUATION SWITCH
MOTOR TOP CONTROL LEFT
MOTOR TOP CONTROL RIGHT
MICRO SWITCH TOP
MICRO SWITCH CONVERTIBLE TOP OPENED
WL PASSENGER COMP
2.5 BR
0.5 WT/RE
1.0 BK
0.5 BR/RE
0.5 BR/RE
G138 31
E56
D48
L52
F58
0.5 BL/WT
0.5 OR
F54
0.5 YE
0.5 YE/BR
0.5 BR CABRIO
X36
CONTROL UNIT REAR SPOILER NOT RS/NOT TURBO
E56 0.5 WT/RE
F57 0.5 GN
1.5 RE
J25 0.5 OR
D137 31
WL PASSENGER COMP.
CABRIO
0.5 BR
0.5 BR/GN
1.5 BL/GN
1.5 YE/GN
X26
X24
0.5 GN/BK
0.5 GN/RE
1.5 BR
J138 31
0.5 BR
J138 31
1.0 GN/BK
1.0 GN/RE
1.5 BL/GN
1.5 YE/GN
0.75 BR
MOTOR REAR SPOILER
NOT RS/NOT TURBO
1
NO.49
1.0 BR
1.0 BR
1.5 BL
0.5 BR/GR
1.5 BK
0.5 BR/YE
0.5 BR
0.5 BR/GN
0.5 BR
0.5 BL
0.5 BK
0.5 BL
0.5 BK
0.5 GN/BK
0.5 GN/RE
MOTOR TOP LOCK RIGHT
MICRO SWITCH ROOF LEFT
CONVERTIBLE TOP CLOSED
MICRO SWITCH ROOF RIGHT
SWITCH REAR SPOILER NOT RS/NOT TURBO
MICRO SWITCH REAR SPOILER RETRACTED
NOT RS/NOT TURBO
MICRO SWITCH REAR SPOILER EXTENDED
NOT RS/NOT TURBO

911 Carrera (993) MODEL 95/2 SHEET 9

RADIO, TELEPHONE

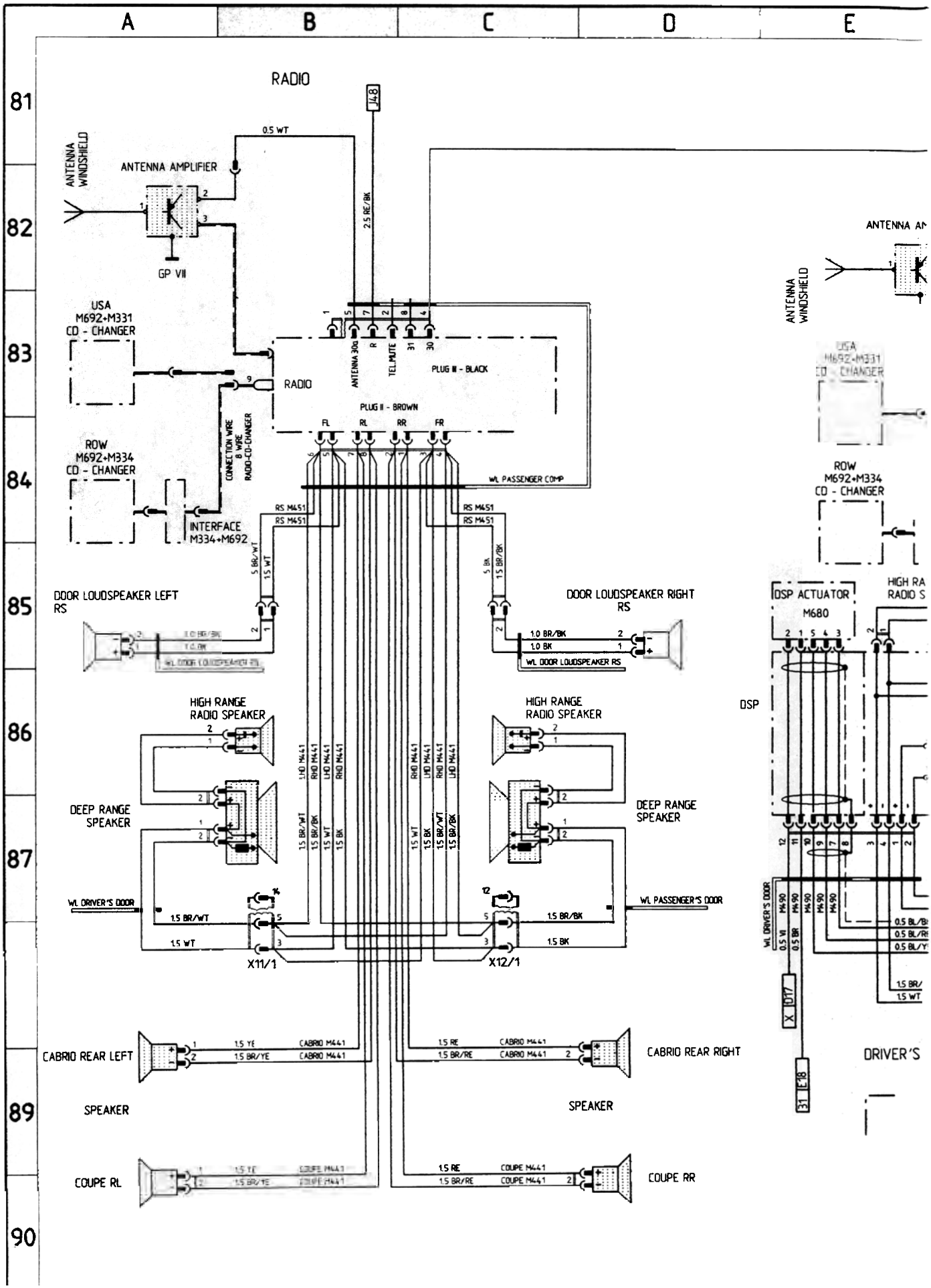

RADIO AND AUDIO OPTION PACK

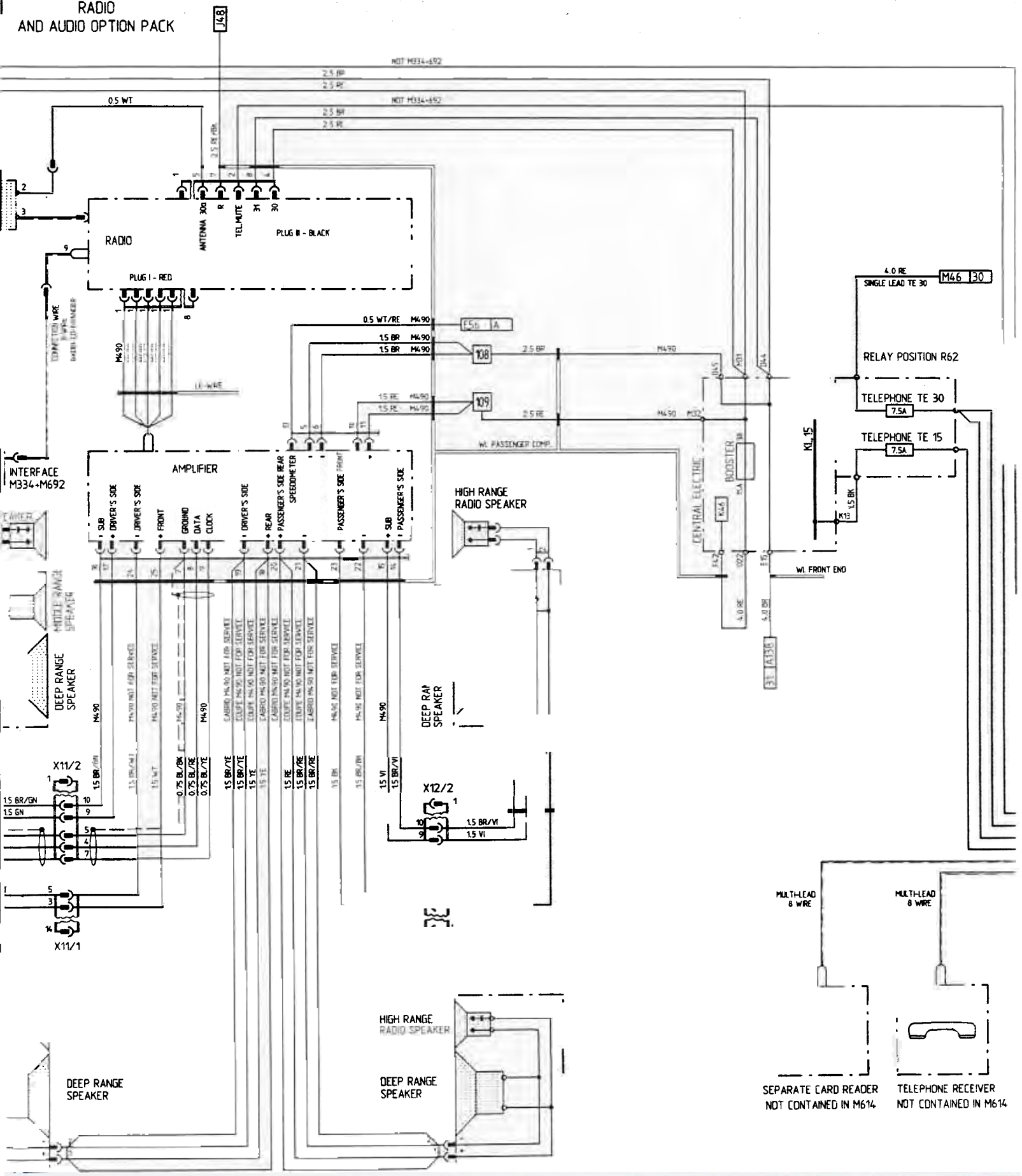

BK = BLACK WT = WHITE RE = RED GN = GREEN YE = YELLOW GR = GREY BR = BROWN BL = BLUE VI = VIOLET PK = PINK

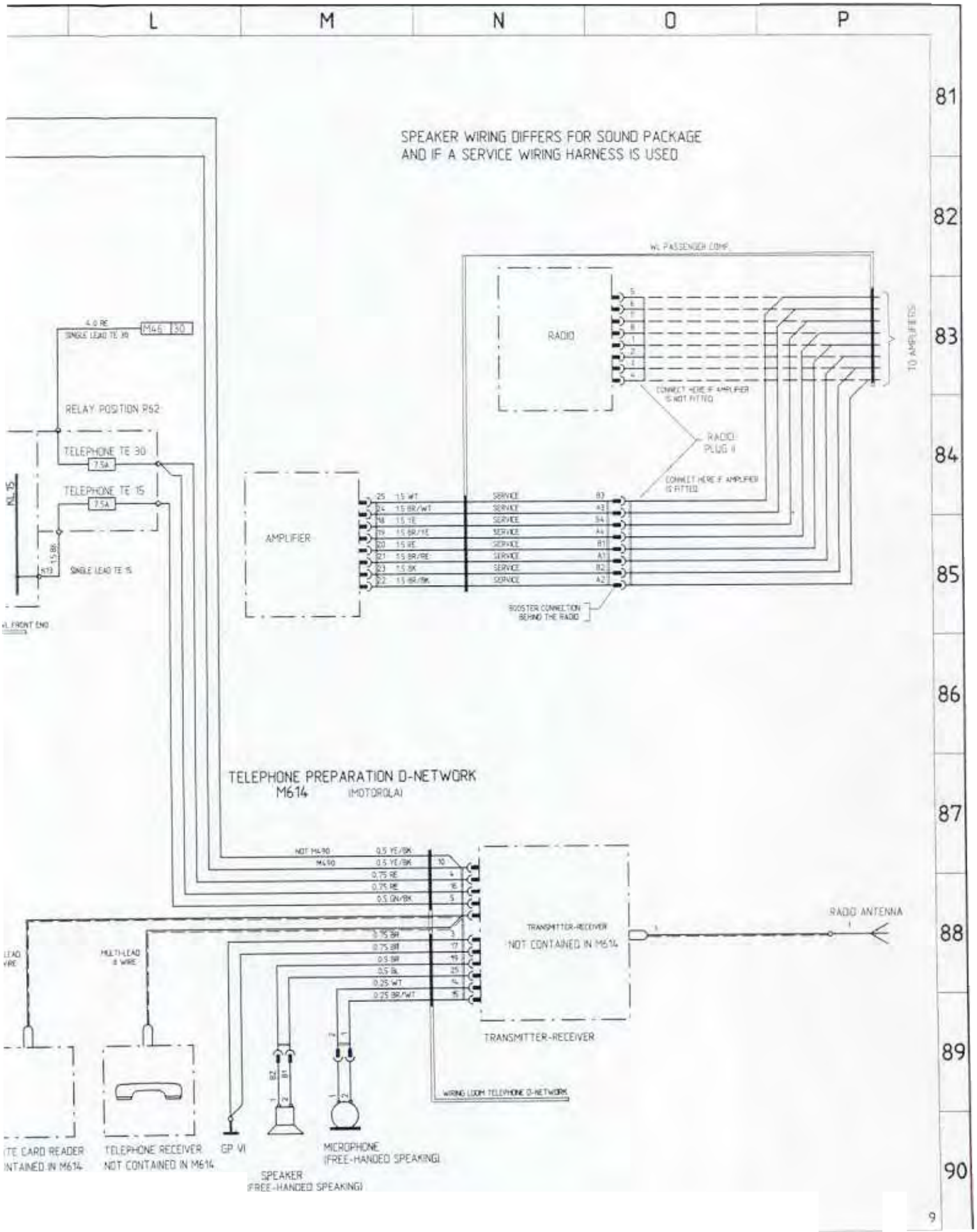
L
M
N
O
P
81
82
83
84
85
86
87
88
89
90
SPEAKER WIRING DIFFERS FOR SOUND PACKAGE
AND IF A SERVICE WIRING HARNESS IS USED
W. PASSENGER COMP.
RADIO
TO AMPLIFIERS
CONNECT HERE IF AMPLIFIER IS NOT FITTED
RADIO PLUG II
CONNECT HERE IF AMPLIFIER IS FITTED
AMPLIFIER
SERVICE
BOOSTER CONNECTION BEHIND THE RADIO
RELAY POSITION R52
TELEPHONE TE 30
7.5A
TELEPHONE TE 15
7.5A
KL 15
SINGLE LEAD TE 15
TELEPHONE PREPARATION D-NETWORK
M614 (MOTOROLA)
NOT M490
M490
TRANSMITTER-RECEIVER
NOT CONTAINED IN M614
RADIO ANTENNA
MULTI-LEAD 8 WIRE
TRANSMITTER-RECEIVER
WIRING LOOM TELEPHONE D-NETWORK
TE CARD READER
NTAINED IN M614
TELEPHONE RECEIVER
NOT CONTAINED IN M614
GP VI
SPEAKER
(FREE-HANDED SPEAKING)
MICROPHONE
(FREE-HANDED SPEAKING)

FOG LIGHT REAR OG LIGHT

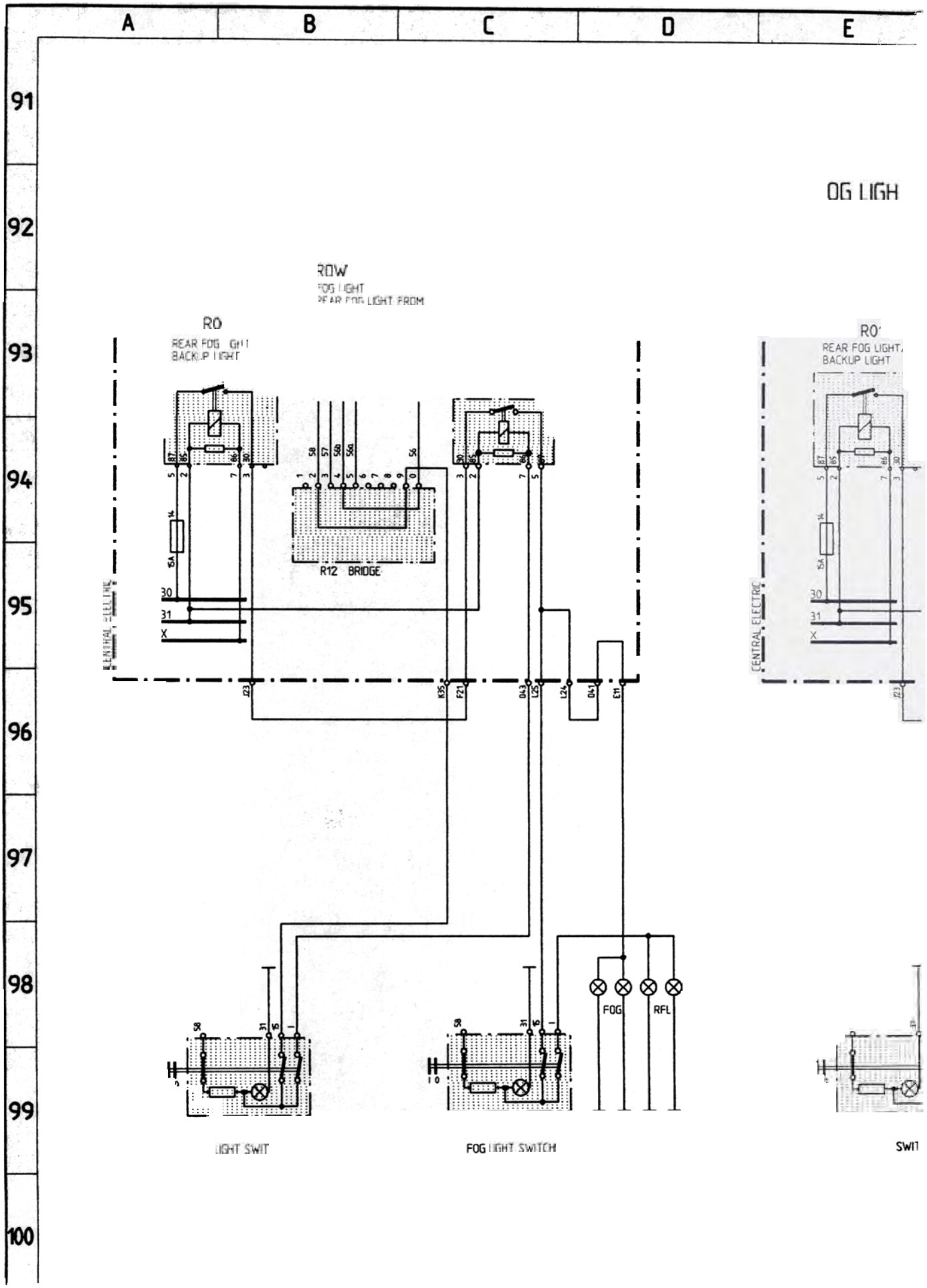

AND REAR FOG LIGHT-WIRINGS

M487-NORWAY
FOG LIGHT + REAR FOG LIGHT
ONLY WITH 57

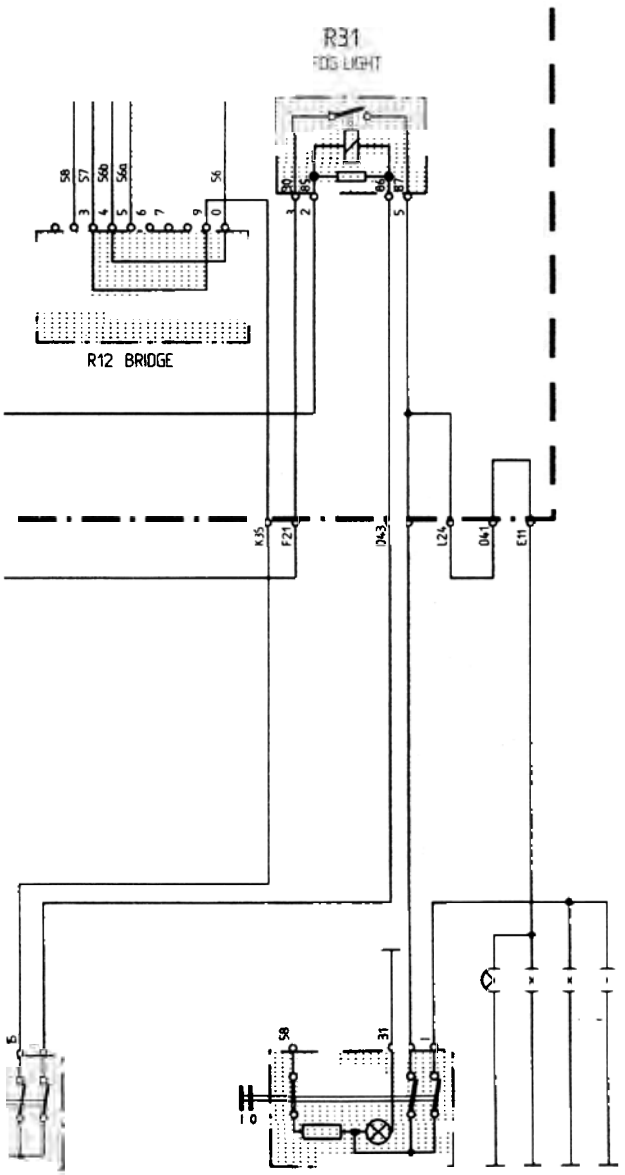

REAR FOG LIGHT SWITCH

M553-USA
FOG LIGHT WITH 56b

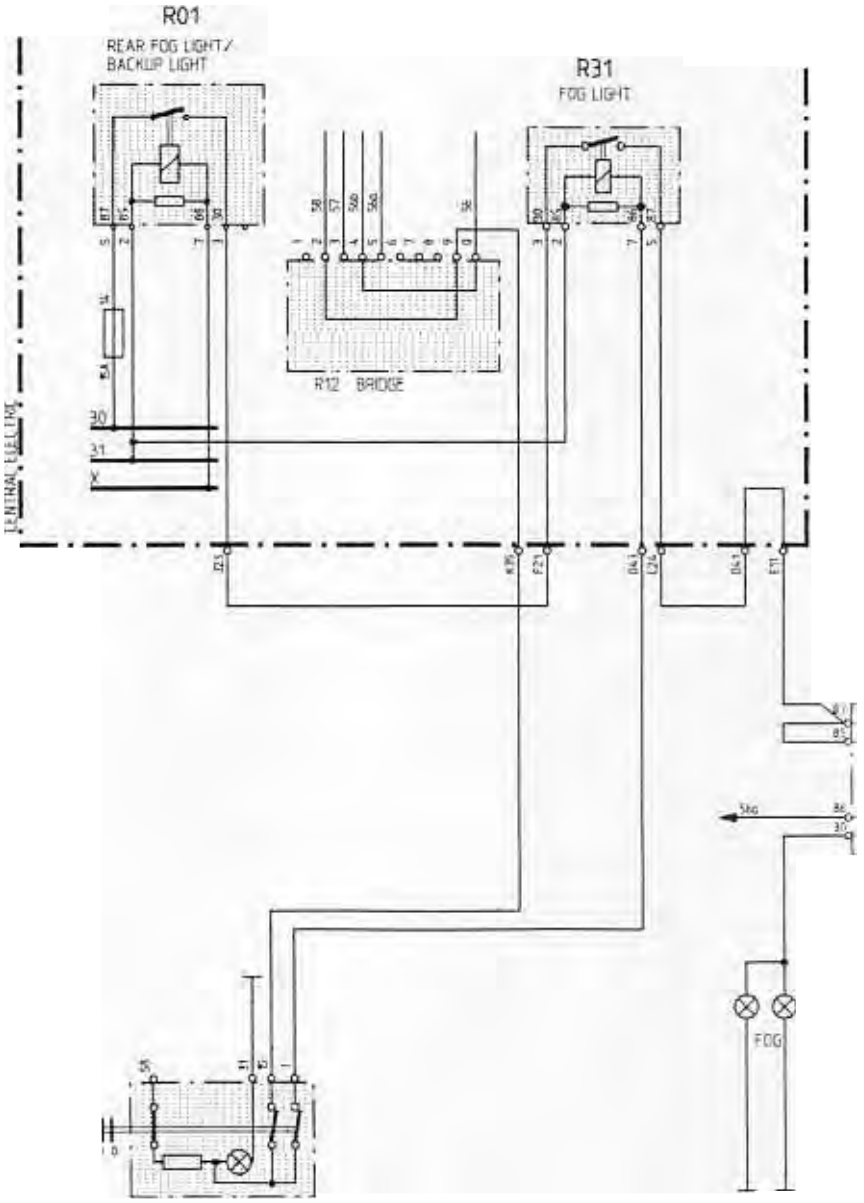

FOG LIGHT SWITCH

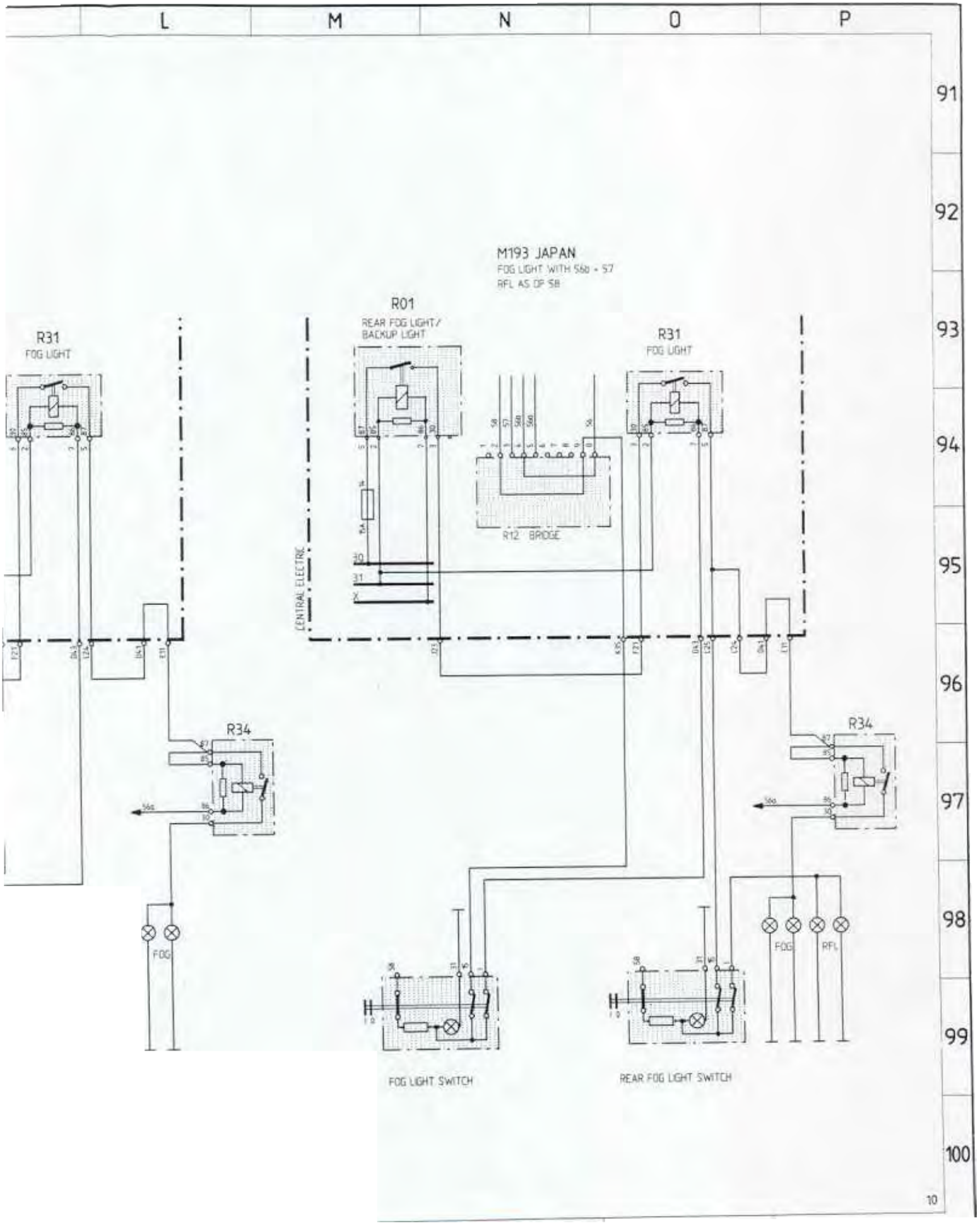
L
M
N
O
P
91
92
93
94
95
96
97
98
99
100
M193 JAPAN
FOG LIGHT WITH S60 + S7
RFL AS OP S8
R01
REAR FOG LIGHT/
BACKUP LIGHT
R31
FOG LIGHT
R31
FOG LIGHT
R12 BRIDGE
CENTRAL ELECTRIC
R34
R34
FOG
FOG
RFL
FOG LIGHT SWITCH
REAR FOG LIGHT SWITCH

911 Carrera (993) MODEL 95/2 SHEET 11

ANTI-DRIVE-OFF DEVICE (M530)

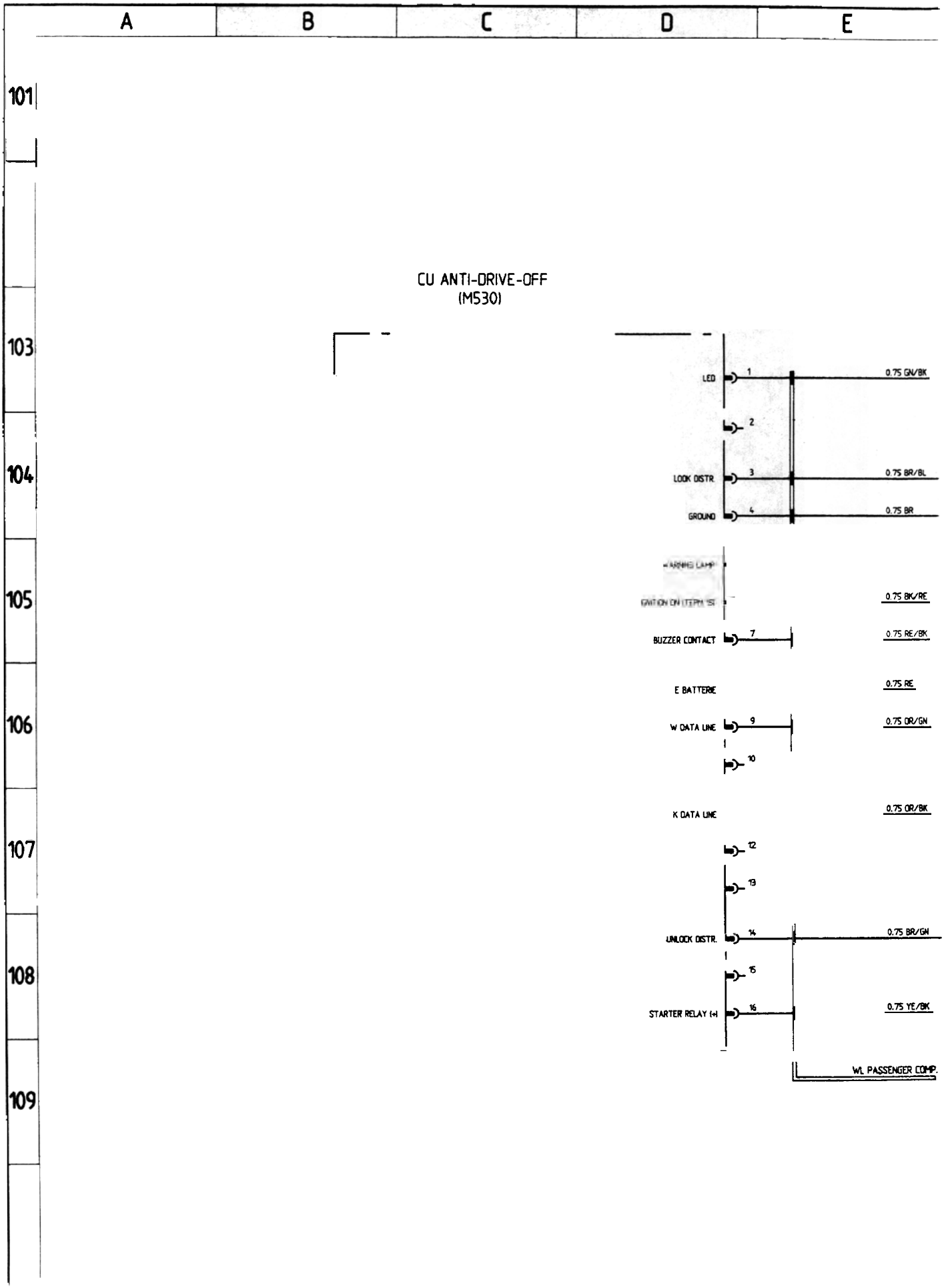

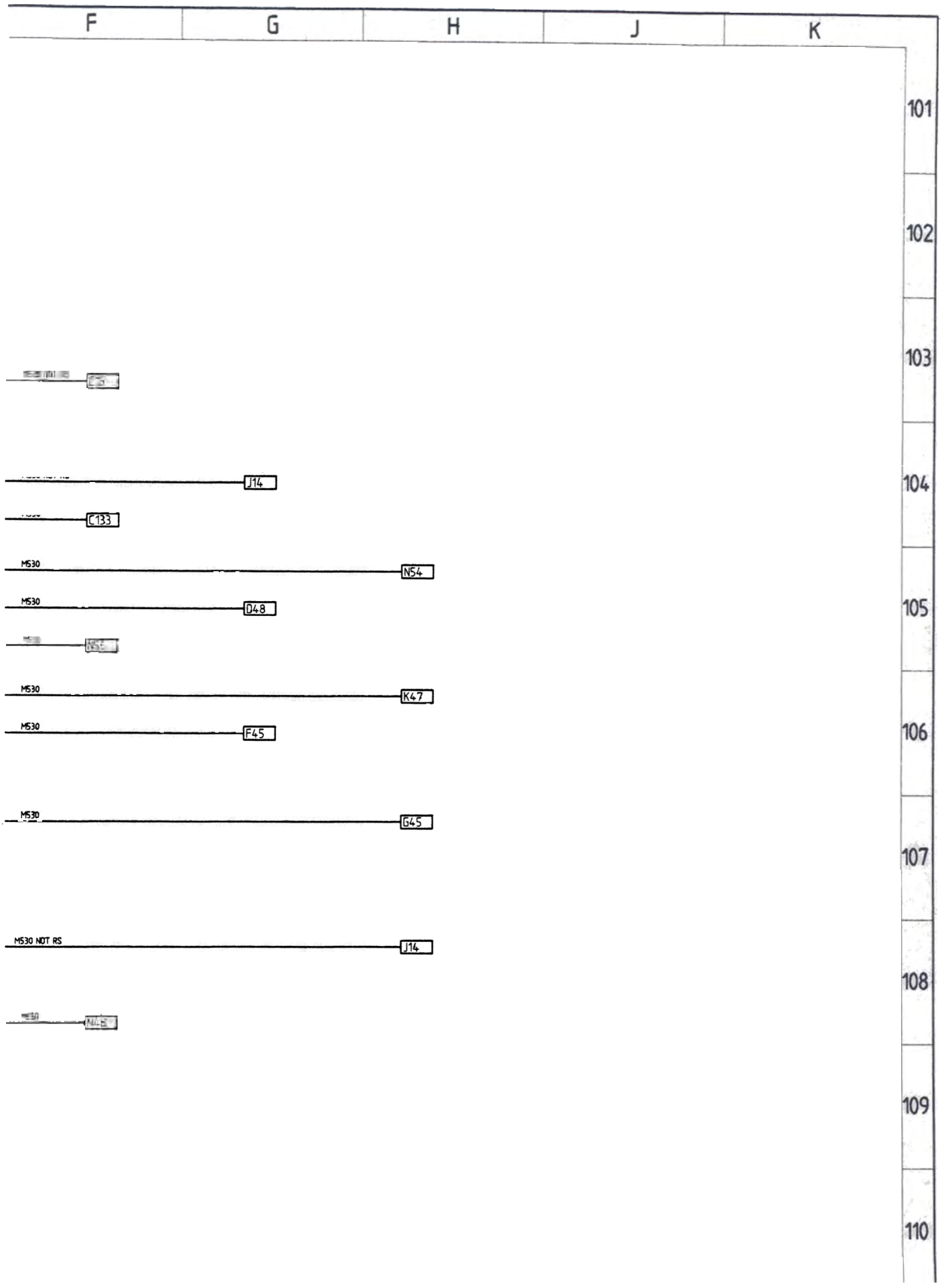
F
G
H
J
K
101
102
103
104
105
106
107
108
109
110
J14
C133
M530
N54
M530
D48
M530
K47
M530
F45
M530
G45
M530 NOT RS
J14

911 Carrera (993) MODEL 95/2 SHEET 12

AIRBAG

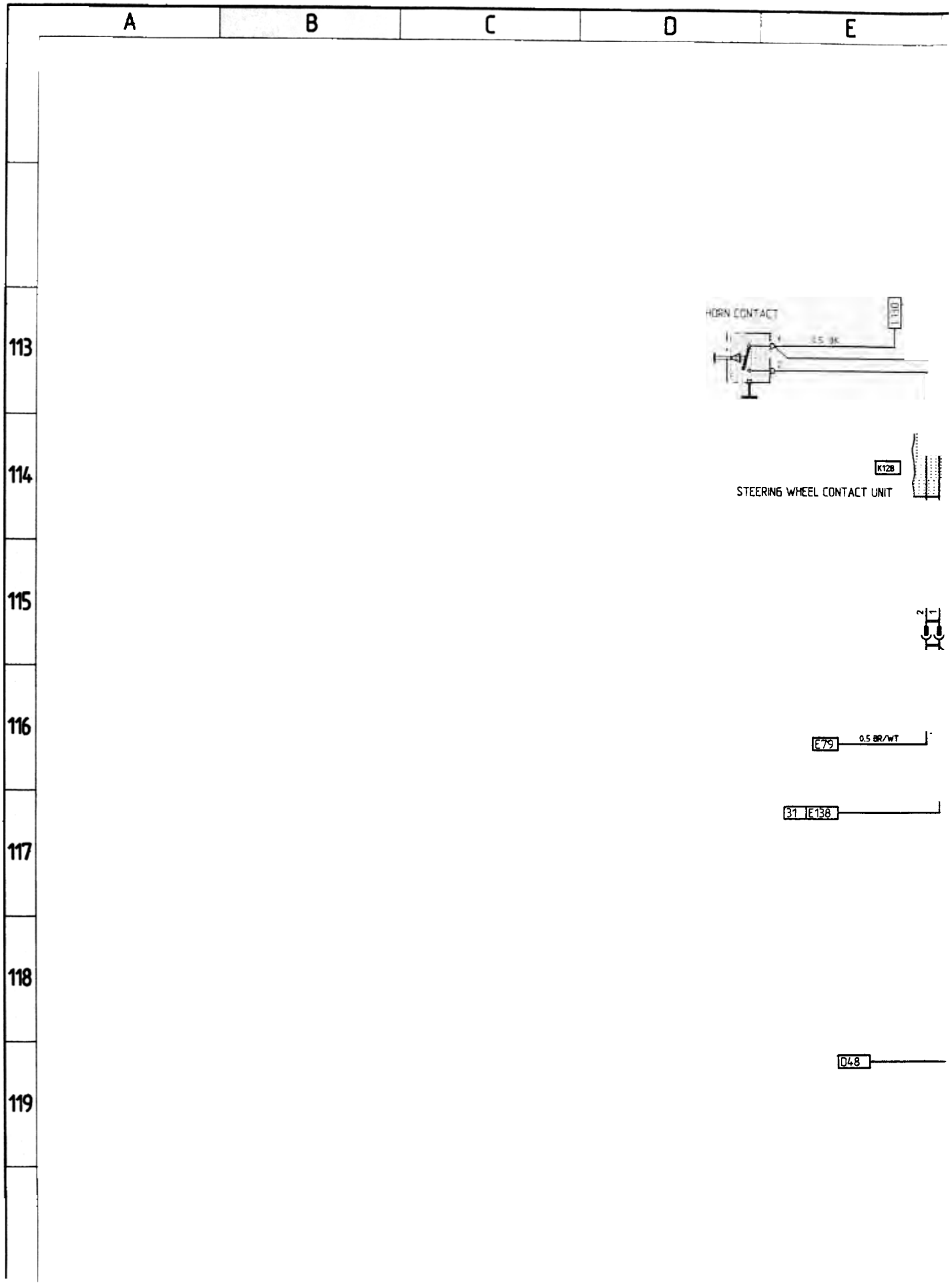

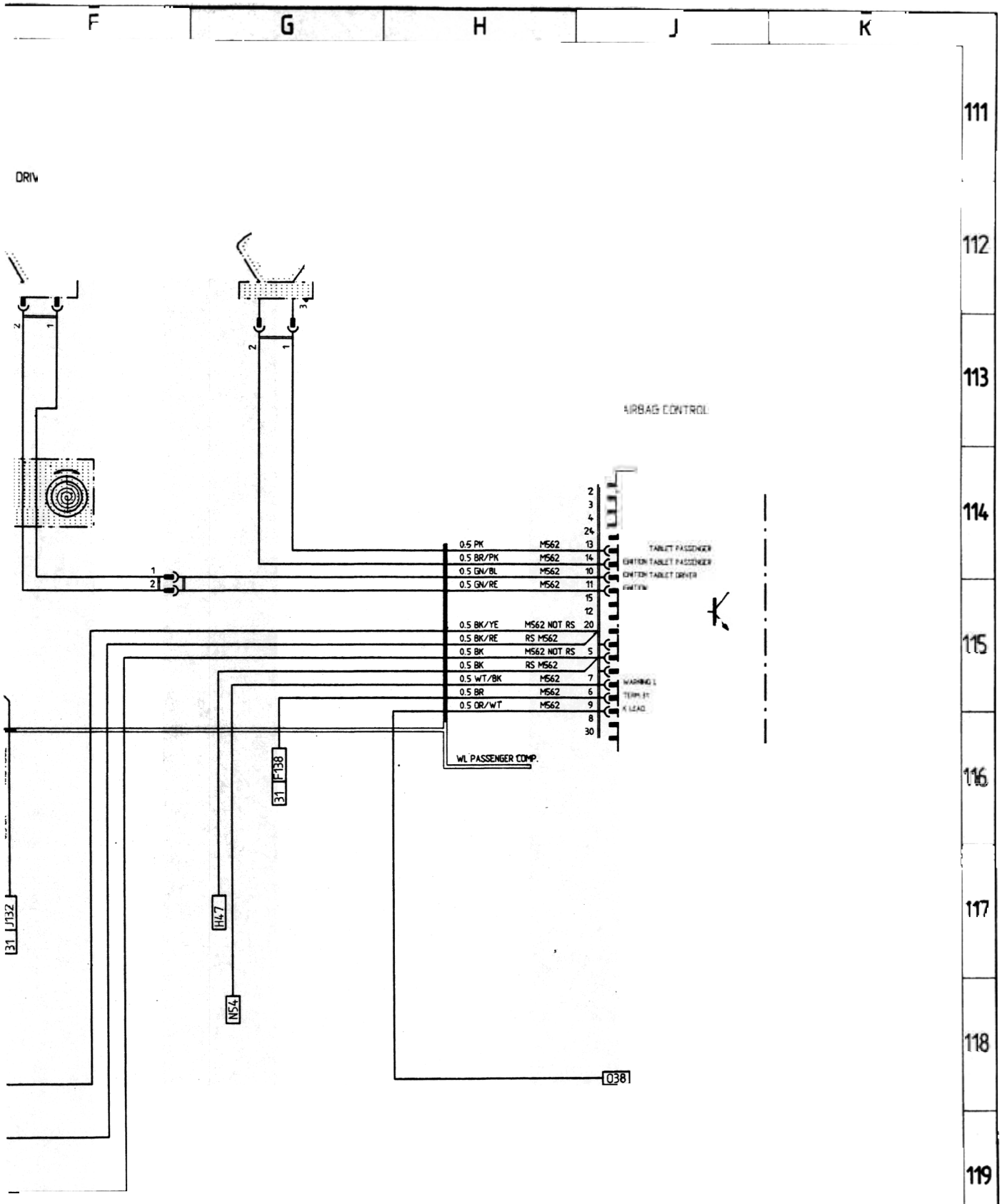
F
G
H
J
K
111
112
113
114
115
116
117
118
119
120
DRIV
AIRBAG CONTROL
0.5 PK M562 13
0.5 BR/PK M562 14
0.5 GN/BL M562 10
0.5 GN/RE M562 11
0.5 BK/YE M562 NOT RS 20
0.5 BK/RE RS M562
0.5 BK M562 NOT RS 5
0.5 BK RS M562
0.5 WT/BK M562 7
0.5 BR M562 6
0.5 OR/WT M562 9
2
3
4
24
15
12
8
30
TABLET PASSENGER
WL PASSENGER COMP.
31 F138
31 J132
H47
N54
038

911 Carrera (993) MODEL 95/2 SHEET 13

TIPTRONIC-TRANSMISSION

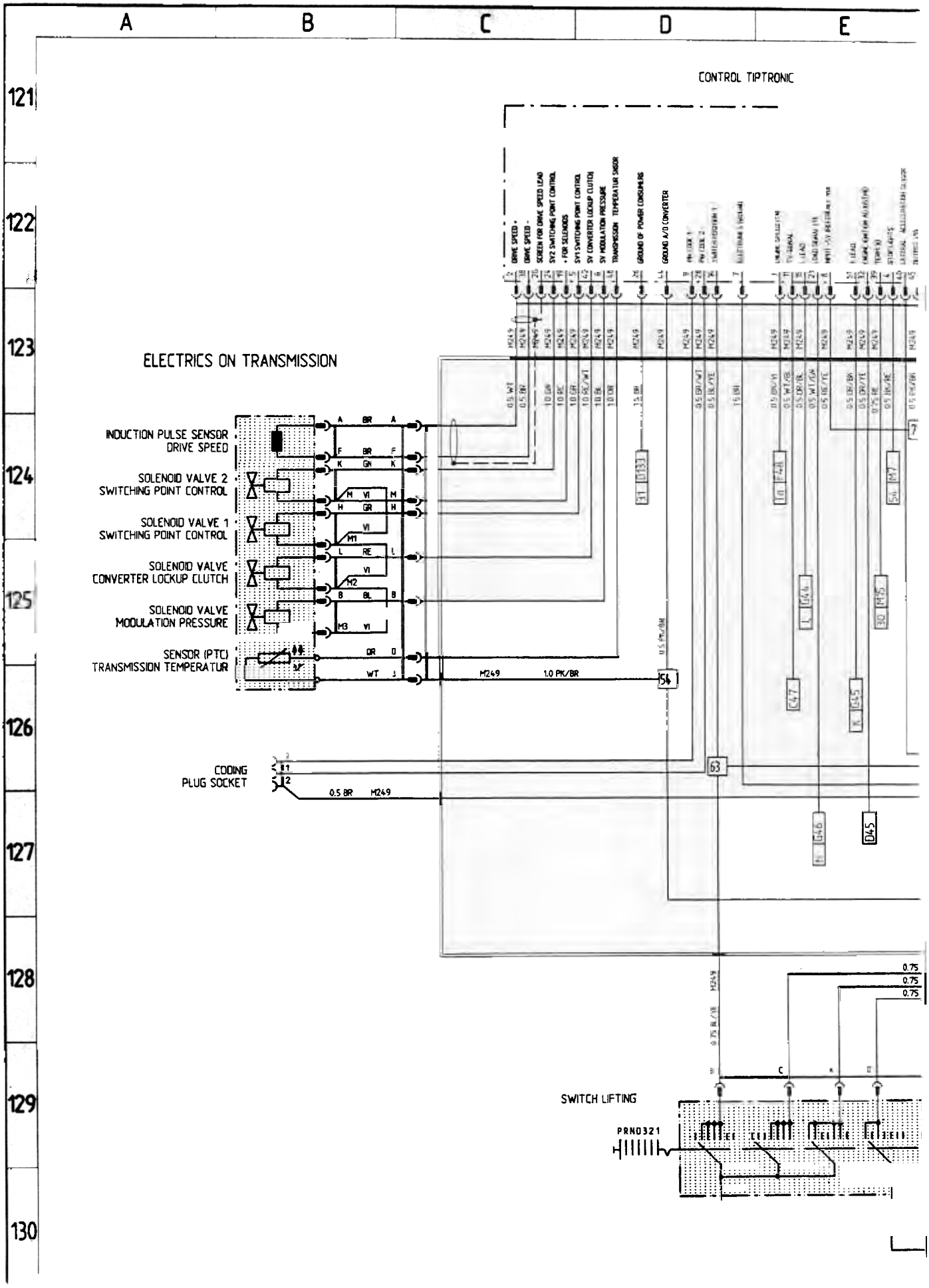

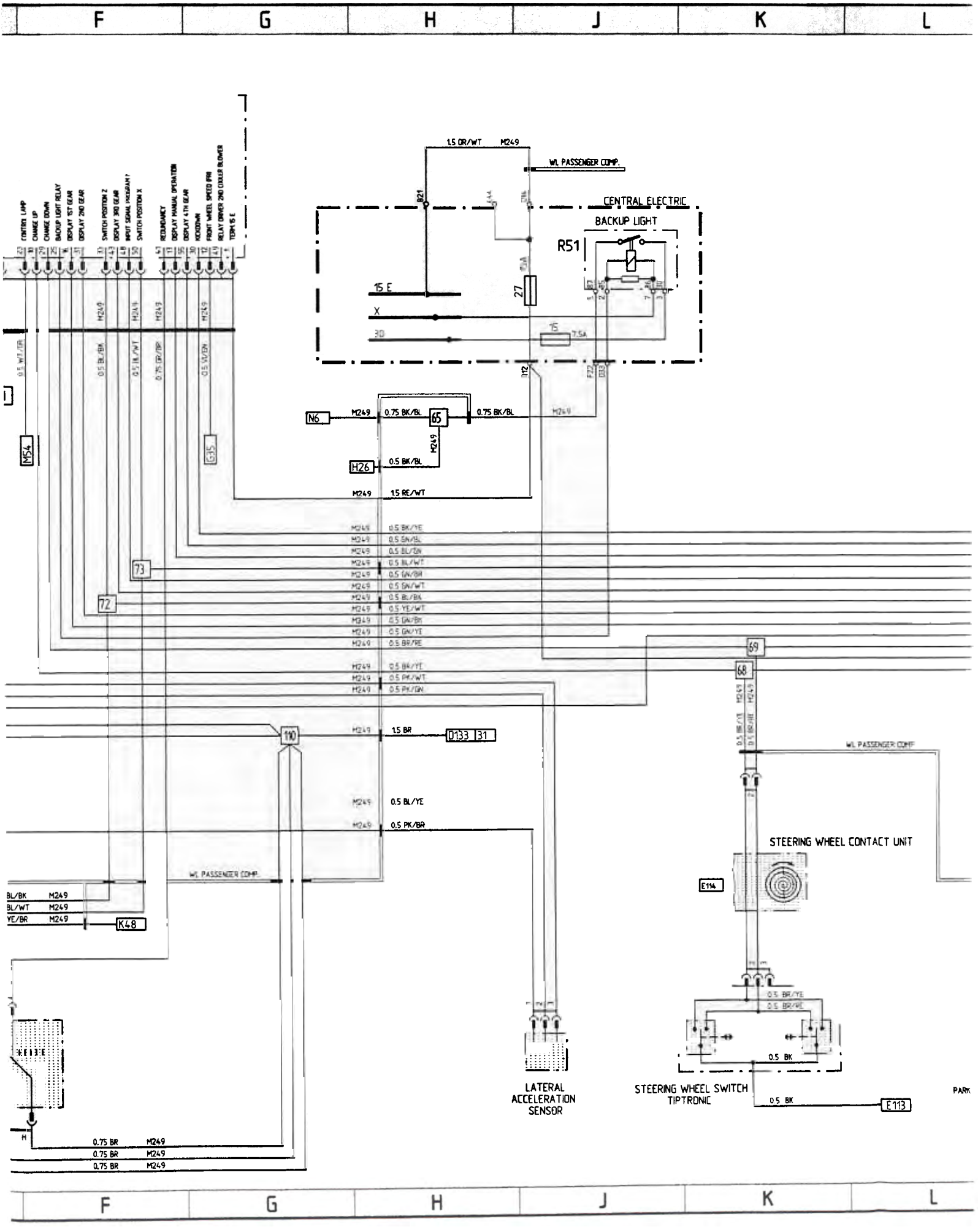
F
G
H
J
K
L
CONTROL LAMP
CHANGE UP
CHANGE DOWN
BACKUP LIGHT RELAY
DISPLAY 1ST GEAR
DISPLAY 2ND GEAR
SWITCH POSITION Z
DISPLAY 3RD GEAR
INPUT SIGNAL PROGRAM 1
SWITCH POSITION X
REDUNDANCY
DISPLAY MANUAL OPERATION
DISPLAY 4TH GEAR
KICKDOWN
FRONT WHEEL SPEED (FR)
RELAY DRIVER 2ND COOLER BLOWER
TERM 15 E
1.5 OR/WT
M249
WL PASSENGER COMP.
CENTRAL ELECTRIC
BACKUP LIGHT
R51
15 E
X
30
27
15
7.5A
N6
0.75 BK/BL
65
H26
0.5 BK/BL
1.5 RE/WT
M54
G35
73
72
69
68
110
1.5 BR
D133
31
0.5 BL/YE
0.5 PK/BR
WL PASSENGER COMP.
K48
STEERING WHEEL CONTACT UNIT
E114
0.5 BK
STEERING WHEEL SWITCH
TIPTRONIC
E113
LATERAL
ACCELERATION
SENSOR
0.75 BR
PARK

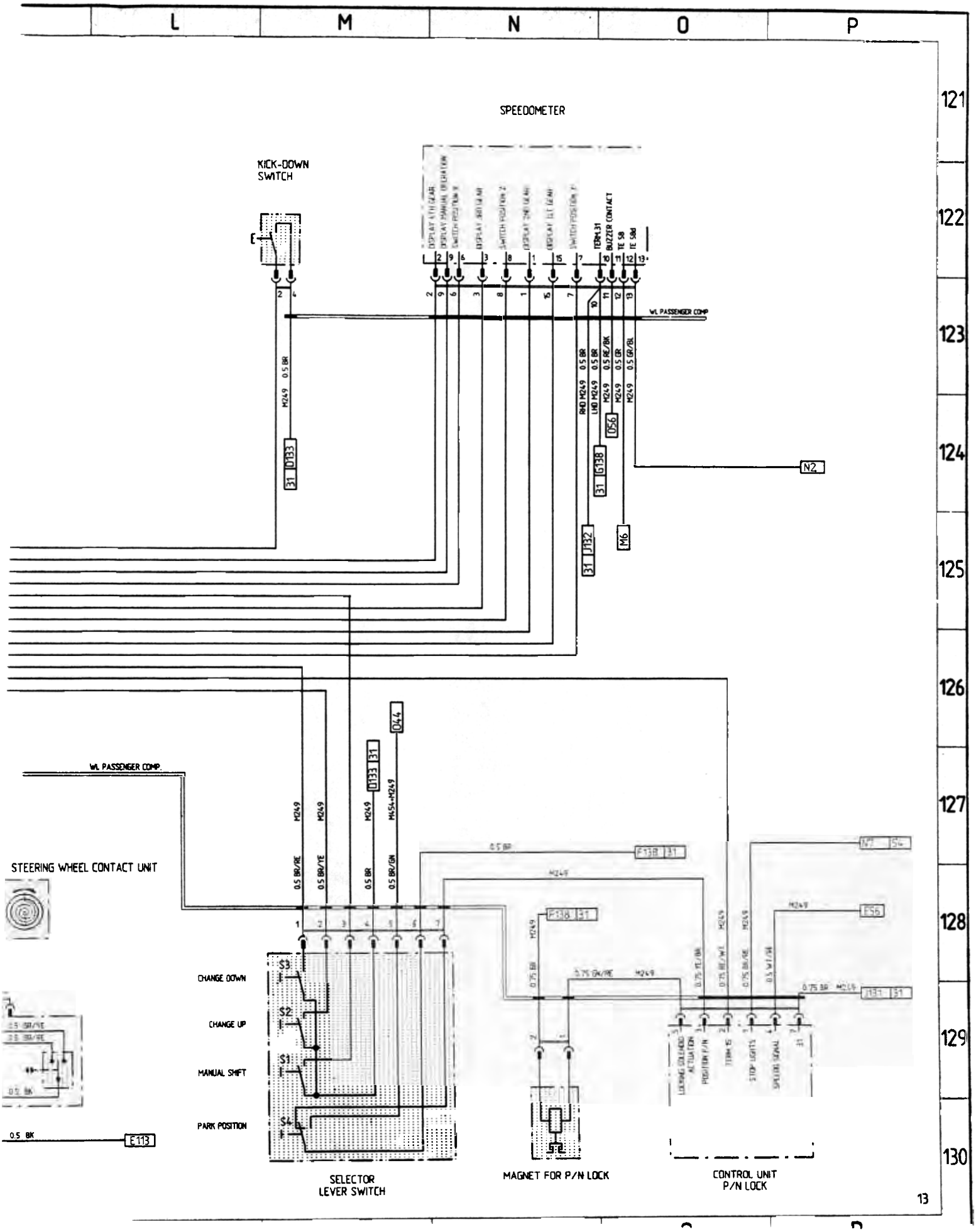
L
M
N
O
P
121
122
123
124
125
126
127
128
129
130
SPEEDOMETER
KICK-DOWN SWITCH
WL PASSENGER COMP
M249 0.5 BR
31 D133
RHD M249 0.5 BR
LHD M249 0.5 BR
M249 0.5 RE/BK
M249 0.5 GR
M249 0.5 GR/BL
D56
31 G138
31 J132
M6
N2
D44
D133 31
WL PASSENGER COMP.
M249
M249
M249
M454+M249
0.5 BR/RE
0.5 BR/YE
0.5 BR
0.5 BR/GN
STEERING WHEEL CONTACT UNIT
F138 31
F138 31
N7 S4
E56
J131 31
CHANGE DOWN
CHANGE UP
MANUAL SHIFT
PARK POSITION
S3
S2
S1
S4
0.5 BK
E113
SELECTOR LEVER SWITCH
MAGNET FOR P/N LOCK
CONTROL UNIT P/N LOCK
13

911 Carrera (993) MODEL 95/2 SHEET 14

GROUND POINTS

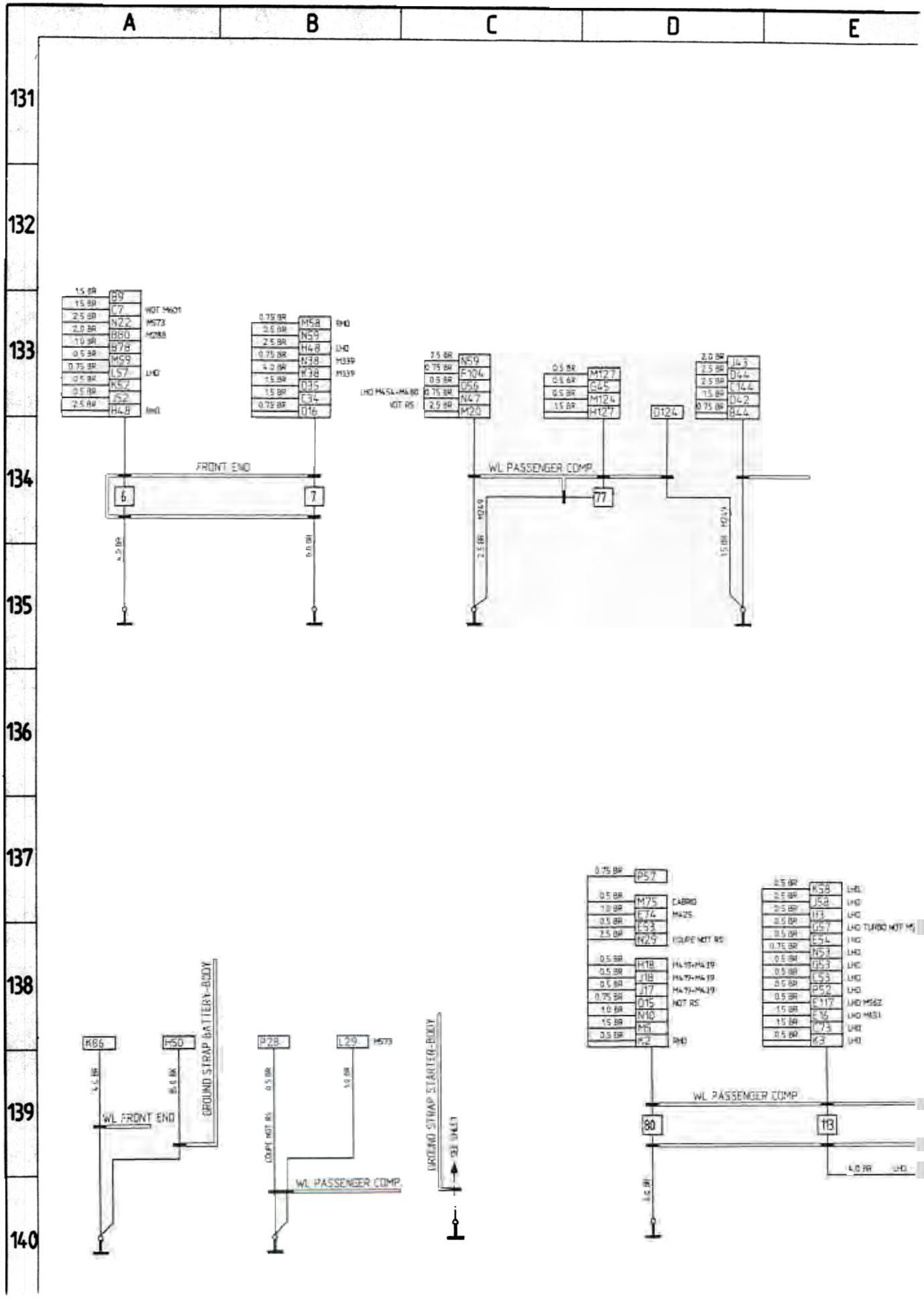

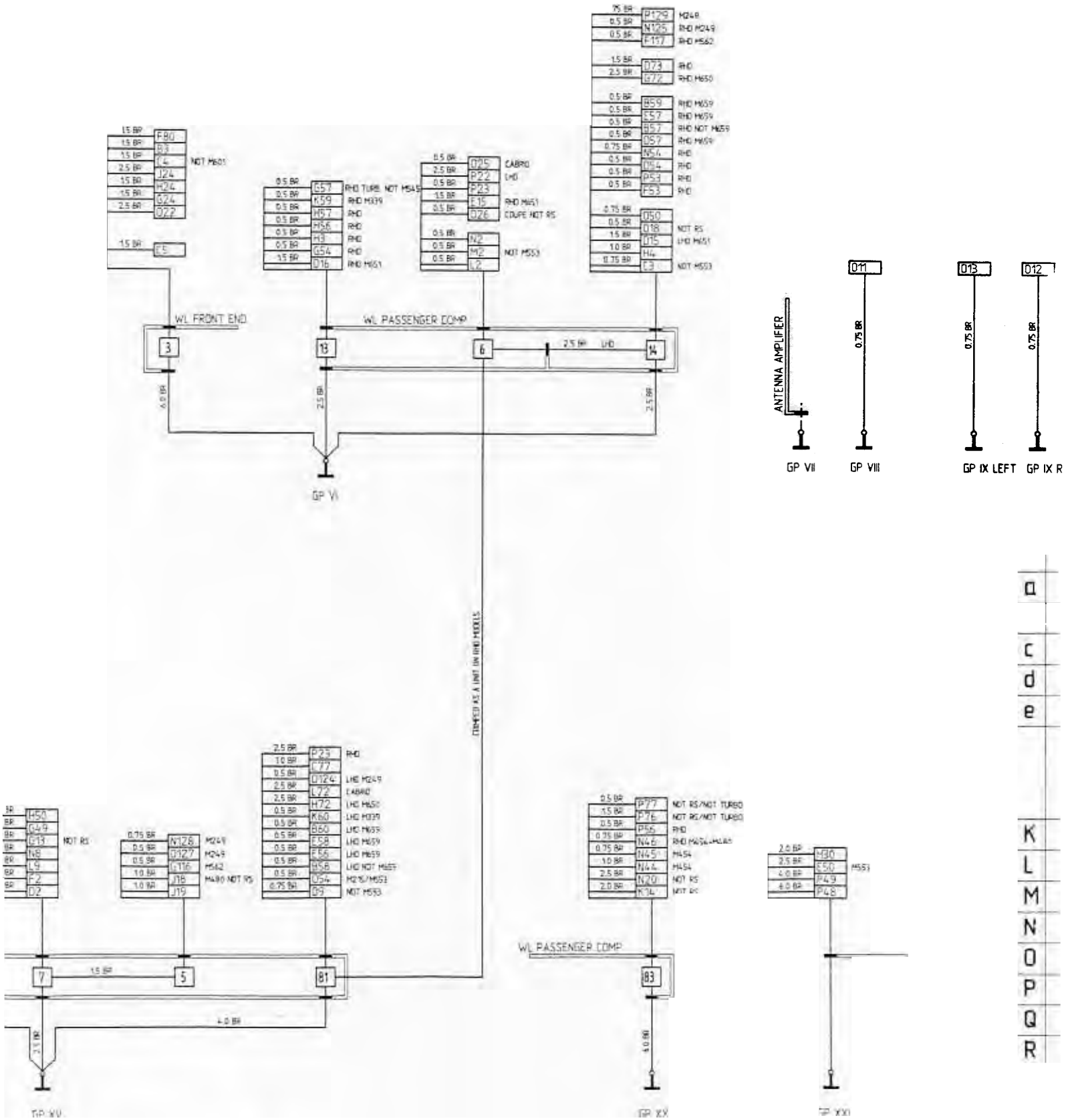
WL FRONT END
WL PASSENGER COMP
WL PASSENGER COMP
GP VI
GP VII
GP VIII
GP IX LEFT
GP IX R
GP XX
ANTENNA AMPLIFIER
CONNECTED AS A UNIT ON RHD MODELS
F80
B3
F4
J24
H24
G24
D22
NOT M601
E5
G57
K59
H57
H56
H3
G54
D16
RHD TURB. NOT M545
RHD M639
RHD
RHD
RHD
RHD
RHD M651
D25
P22
P23
E15
D26
CABRIO
LHD
RHD M651
COUPE NOT RS
N2
M2
L2
NOT M553
P129
N126
F137
M249
RHD M249
RHD M562
D73
G72
RHD
RHD M650
B59
E57
B57
D57
N54
D54
P54
F53
RHD M659
RHD M659
RHD NOT M659
RHD M659
RHD
RHD
RHD
RHD
D50
D18
D15
H4
E3
NOT RS
LHD M651
NOT M553
D11
D13
D12
0.75 BR
2.5 BR
LHD
4.0 BR
P23
C77
D124
L72
H72
K60
B60
F58
F56
H58
D54
D9
RHD
LHD M249
CABRIO
LHD M651
LHD M639
LHD M659
LHD M659
LHD M659
LHD NOT M659
M216/M553
NOT M553
N126
D127
L116
J18
J19
M249
M249
M562
M480 NOT RS
H50
G49
G13
N8
L9
F2
D2
NOT RS
P77
P76
P55
N46
N45
N44
N20
K34
NOT RS/NOT TURBO
NOT RS/NOT TURBO
RHD
RHD M454-M480
M454
M454
NOT RS
NOT RS
H30
E50
P49
P48
M553
a
c
d
e
K
L
M
N
O
P
Q
R
F
G
H
J
K
L

L M N O P

CODE	NOTE	POSITION IN VEHICLE LHD
GP I	LUGGAGE COMPARTMENT, WHEEL HOUSING LEFT	2cP
GP II	LUGGAGE COMPARTMENT, WHEEL HOUSING RIGHT	
GP ..	GROUND OF POWER CONSUMERS, UNDER SEAT LEFT	
..	ENGINE ELECTRONICS/TIPTRONIC	
..	CENTRAL ELECTRIC, ON SIDE MEMBER RIGHT	
..	ANTENNA AMPLIFIER ON SIDE MEMBER LEFT	
GP VIII	INSIDE LIGHT CONVERTIBLE, ROOF CENTRE FRONT	
GP IX	INSIDE LIGHT, ROOF RIGHT	
GP IX	INSIDE LIGHT, ROOF LEFT	11aP
GP X	BATTERY, LUGGAGE COMPARTMENT LEFT	3cP
GP XI	GROUND STRAP (STARTER, TRANSMISSION, ENGINE, BODY)	
GP XII	ENGINE COMPARTMENT REAR LEFT	
GP XIV	ENGINE COMPARTMENT REAR RIGHT	
GP XV	INSTRUMENTS, SIDE MEMBER LEFT	
GP XX	SEAT CROSS MEMBER, UNDER SEAT RIGHT	
GP XXI	GROUND OF POWER CONSUMERS, CAMSHAFT CASING CYL.3	15cP

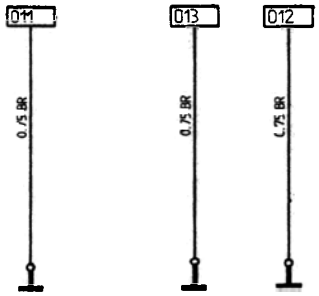

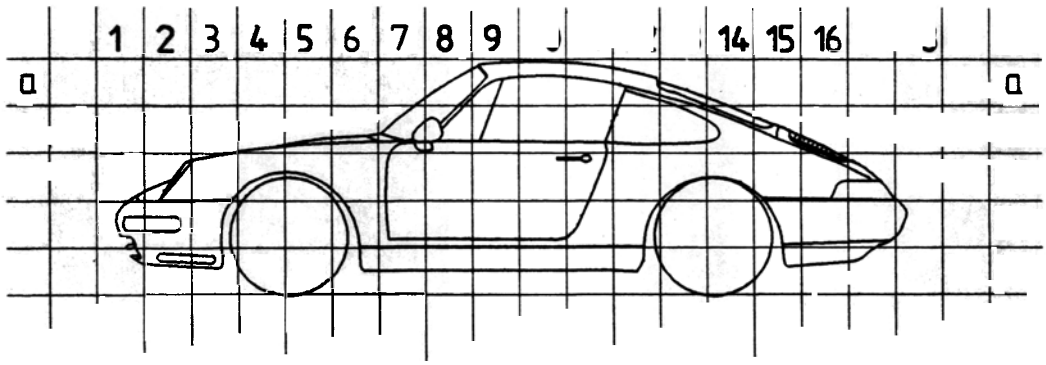

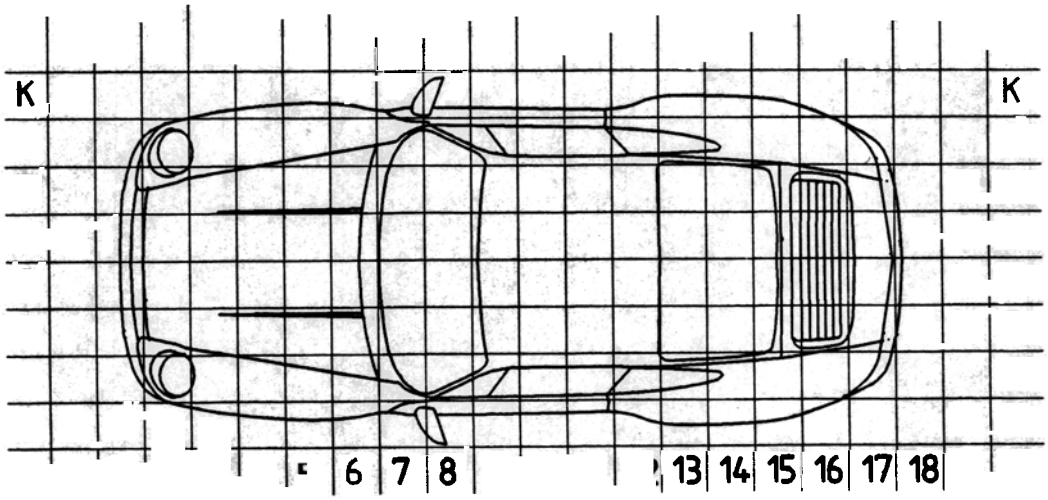

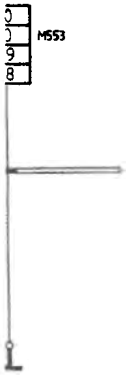

131 132 133 134 135 136 137 138 139 140

CONSTRUCTION COMPONENTS

A B C D E

CONSTRUCTION COMPONENTS

DESIGNATION, FUNCTION	POSITION IN VEHICLE LHD	POSITION IN VEHICLE RHD	NOTE	FIELD WIRING
ALARM HORN	13dP	13dP	REAR LH CROSSMEMBER	J20
[illegible]	7bL	7bQ	IN LUGGAGE COMPARTMENT	
[illegible]	3dP	3dP	IN LUGGAGE COMPARTMENT	
[illegible]	4cL	4cL	IN LUGGAGE COMPARTMENT RIGHT	
AMPLIFIER	9eM	9eM	UNDER THE SEAT RIGHT	
BLOWER FINAL STAGE	6bN	6bN	IN LUGGAGE COMPARTMENT	
	16cO	16cO	ON ENGINE	H30
	6cM	6cM	IN LUGGAGE COMPARTMENT	G30
	6cP	6cP	IN LUGGAGE COMPARTMENT	F30
	1dO	1dO	IN LUGGAGE COMPARTMENT	
	14dN	14dN	BY TRANSMISSION RIGHT	
	2dQ	2dQ	IN WHEEL HOUSING FRONT LEFT	
	6dP	6dN	BY CLUTCH PEDAL UNDER FLOOR PANEL	
	16cP	16cP	CARRIER PLATE IN ENGINE COMPARTMENT	
	2dM	2dM	IN LUGGAGE COMPARTMENT	
	6cO	6cO	ON INTRUMENT PANEL	
	9eM	9eM	UNDER THE SEAT RIGHT	
	10dP	10dP	UNDER THE SEAT LEFT	
[illegible]	7cM	7cP	ON RH SIDE OF TRANSVERSE WALL	
[illegible]	7cO	7cN	ON INTRUMENT PANEL	
[illegible]	6cM	6cM	CENTRAL ELECTRIC	
[illegible]	[illegible]	[illegible]	[illegible]	
[illegible]	[illegible]	[illegible]	[illegible]	
[illegible]	6cM	6cM	IN LUGGAGE COMPARTMENT	—
CENTRAL INFORMER	7cP	7cM	ON FIREWALL	M32
DIAGNOSIS CONNECTION	7cL	7cQ	IN PASSENGER'S FOOTWELL	G50
[illegible]	[illegible]	[illegible]	[illegible]	
ENGINE SPEED SENSOR	[illegible]	[illegible]	[illegible]	
ENGINE TEMPERATURE SENSOR	[illegible]	[illegible]	[illegible]	
FLASHER	[illegible]	[illegible]	[illegible]	
FUEL PUMP	6eM	6eP	BEHIND THE BASE	
FUSES ENGINE COMPARTMENT	16cP	16cP	CARRIER PLATE IN ENGINE COMPARTMENT	L28
FUSE IN LUGGAGE COMPARTMENT	4cP	4cP	BELOW HYDRAULIC UNIT COVER	D37/1
FUEL LEVEL SENSOR	5cM	5cP	IN FUEL TANK	K51
GONG RELAY	7bQ	—	LH SIDE IN FRONT OF INSTRUMENTS	P53/5
HALL SENSOR	17cO	17cO	ON DISTRIBUTOR	
HYDRAULIC UNIT ABS	3dP	3dP	IN LUGGAGE COMPARTMENT	
HEADLIGHT CLEANER PUMP	3cQ	3cQ	BY WASHING FLUID RESERVOIR IN WHEEL HOUSING FL	A79/
HEADLIGHT CLEANER RELAY	6cM	6cM	CENTRAL ELECTRIC	E78
IDLE SPEED POSITIONER	15bN	15bN	ON ENGINE	H/14
IGNITION CONTROL UNIT	11dP	11dP	UNDER THE SEAT LEFT	
IGNITION COIL I	17cP	17cP	ON ENGINE	L41
IGNITION COIL II	17cP	17cP	ON ENGINE	L41
KICK-DOWN SWITCH	6dO	6dM	BY ACCELERATOR PEDAL UNDER FLOOR PANEL	M122
KNOCK SENSOR CYL.1-3	15cP	15cP	ON ENGINE	A47
[illegible]	16cN	16cN	ON ENGINE	A47
LATERAL ACCELERATION SENSOR TIPTRONIC TRANSMISSION	[illegible]	[illegible]	[illegible]	
LIGHTS ON BUZZER				
MFI + DI RELAY	6cM	6cM	CENTRAL ELECTRIC	J44
MFI + DI CONTROL UNIT	9eP	9eP	UNDER THE SEAT LEFT	B-G4
	16bO	16bO	ON ENGINE	A43
MICRO SWITCH ROOF RIGHT	9aN	9aN	AT CONVERTIBLE TOP FRAME	M79
MICRO SWITCH ROOF LEFT	9aO	9aO	AT CONVERTIBLE TOP FRAME	L79
MICRO SWITCH REAR SPOLIER EXTENDED	16bP	16bP	ON TAILGATE	O79
MICRO SWITCH REAR SPOILER RETRACTED	16bP	16bP	ON TAILGATE	O79

DESIGNATION, FUNCTION	POSITION IN VEHICLE LHD	POSITION IN VEHICLE RHD	NOTE	FIELD IN WIRING DIAGRAM
MICRO SWITCH TDC	12cL	12cL	BEHIND SIDE PANEL COVERING	D71
	12cL	12cL	BEHIND SIDE PANEL COVERING	P71
	12aN	12aN	IN ROOF	G73
MOTOR TOP CONTROL RIGHT	15cN	15cN	BEHIND REAR SEAT	N71
MOTOR TOP CONTROL LEFT	15c0	15c0	BEHIND REAR SEAT	N71
MOTOR TOP LOCK RIGHT	9aN	9aN	AT CONVERTIBLE TOP FRAME	K/L79
	9a0	9a0	AT CONVERTIBLE TOP FRAME	J/K79
	16cP	16cP	ON ENGINE	G30
	15cN	15cN	ON ENGINE	A42
OUTSIDE TEMP. SENSOR	2dP	2dP	FRONT LH BUMPER	A60
OXYGEN SENSORS CYL.1-3	16dP	16dP	ON ENGINE	F150
OXYGEN SENSORS CYL.4-6	16dM	16dM	ON ENGINE	D150
OIL PRESSURE SENSOR/SWITCH	14cN	14cN	ON ENGINE	A54
OIL COOLER BLOWER	2dL	2dL	IN WHEEL HOUSING FRONT RIGHT	D21
OIL LEVEL SENSOR	12cK	12cK	IN WHEEL HOUSING REAR RIGHT	E51
OIL TEMPERATURE SENSOR FOR INSTRUMENT	14cN	14cN	ON ENGINE	A53
OIL TEMPERATURE SENSOR FOR OIL COOLER BLOWER	2dL	2dL	IN WHEEL HOUSING FRONT RIGHT	J21
PRESSURE TRANSDUCER, CHARGE AIR PRESSURE	16bM	16bM	ON ENGINE	A56
PRESSURE SWITCH AIR CONDITIONING SYSTEM	6b0	6b0	IN LUGGAGE COMPARTMENT	E30
PRESSURE WARNING SWITCH	1d0	1d0	IN LUGGAGE COMPARTMENT	M/N39
REAR FOG LIGHT CUTOUT RELAY	17dN	17dN	BEHIND REAR PANEL	H108
REAR WINDOW WIPER RELAY	15b0	15b0	ON REAR WINDOW WIPER MOTOR	E71
	16dP	16dP	IN ENGINE COMPARTMENT	J30
	2dQ	2dQ	IN WHEEL HOUSING FRONT LEFT	M21
RESISTOR OIL COOLER BLOWER	2dL	2dL	IN WHEEL HOUSING FRONT RIGHT	
RELAY CONDENSER BLOWER	6cM	6cM	CENTRAL ELECTRIC	L21
RELAY AC COMPRESSOR	16cP	16cP	CARRIER PLATE IN ENGINE COMPARTMENT	L30
RELAY TWO-TONE HORN	6cM	6cM	CENTRAL ELECTRIC	F78
RELAY POWER WINDOW	6cM	6cM	CENTRAL ELECTRIC	K18/19
RELAY BLOWER ENGINE COMPARTMENT	16cP	16cP	CARRIER PLATE IN ENGINE COMPARTMENT	J/K30
RELAY STARTER TIPTRONIC-TRANSMISSION	6cM	6cM	CENTRAL ELECTRIC	N50
RELAY BACKUP LIGHT	7bQ	7bQ	IN LUGGAGE COMPARTMENT LEFT	
RELAY THERMO SWITCH CATALYTIC CONVERTER	6cM	6cM	CENTRAL ELECTRIC	L/M51
RELAY TERM.X	6cM	6cM	CENTRAL ELECTRIC	J/K44
RELAY TERM.15 E	6cM	6cM	CENTRAL ELECTRIC	K/L44
RELAY RFL - BACKUP LIGHT	6cM	6cM	CENTRAL ELECTRIC	J/K7, A-M94
RELAY FRONT FOG LAMP	6cM	6cM	CENTRAL ELECTRIC	J7, C-094
RELAY OIL COOLER BLOWER	6cM	6cM	CENTRAL ELECTRIC	K21
	4cL	4cL	IN LUGGAGE COMPARTMENT RIGHT	M39
	6cM	6cM	CENTRAL ELECTRIC	H75
RELAY DAYTIME RUNNING LIGHT CANADA	6cM	6cM	CENTRAL ELECTRIC	D1
RELAY FOG LIGHT SWITCH OFF USA/JAPAN	6cM	6cM	CENTRAL ELECTRIC	H-P/94, F/G10
SECONDARY AIR PUMP RELAY	17cP	17cP	ON CARRIER ON LH SIDE IN ENGINE COMPARTMENT	A50
STOP LIGHT SWITCH	6dP	6dM	AT THE BRAKE PEDAL BELOW THE FLOOR PANEL	N9
	12d0	12d0	ON GEARBOX	D-F129
SHIFT VALVE RESONANCE FLAP		15bN	ON ENGINE	H41
STARTER	14dN	14dN	BY CLUTCH HOUSING RIGHT	P49/50
SECONDARY AIR PUMP	16cN	16cN	ON ENGINE	D/E50
	15bN	15bN	ON THROTTLE VALVE ASSEMBLY	A44
TIMING VALVE	16cM	16cM	ON ENGINE	L150
TANK VENTING VALVE	16cP	16cP	ON ENGINE	K41
TWO-TONE HORN I	3cL	3cL	IN WHEEL HOUSING FRONT RIGHT	F80
TWO-TONE HORN II	3cL	3cL	IN WHEEL HOUSING FRONT RIGHT	G80
V-BELT CONTROL	17d0	17d0	ON ENGINE REAR MIDDLE	A55
WINDSHIELD WASHING FLUID PUMP	3c0	3c0	BY WASHING FLUID RESERVOIR IN WHEEL HOUSING FL	A78
WIPER INTERMITTENT CONTROL RELAY	6cM	6cM	CENTRAL ELECTRIC	F/G75

FIELD IN WIRING DIAGRAM
071
P71
G73
N71
N71
K/L79
J/K79
G30
A42
A60
F150
D150
A54
021
E51
A53
J21
A56,
E30
M/N39
H108
E71
J30
M21
M21
L21
L30
F78
K18/19
J/K30
N50
J122
L/M51
J/K44
K/L44
J/K7, A-M94
J7, C-094
K21
M39
H75
D1
H-P/94, F/G10
A50
N9
D-F129
H41
P49/50
D/E50
A44
L150
K41
F80
G80
A55
A78
F/G75

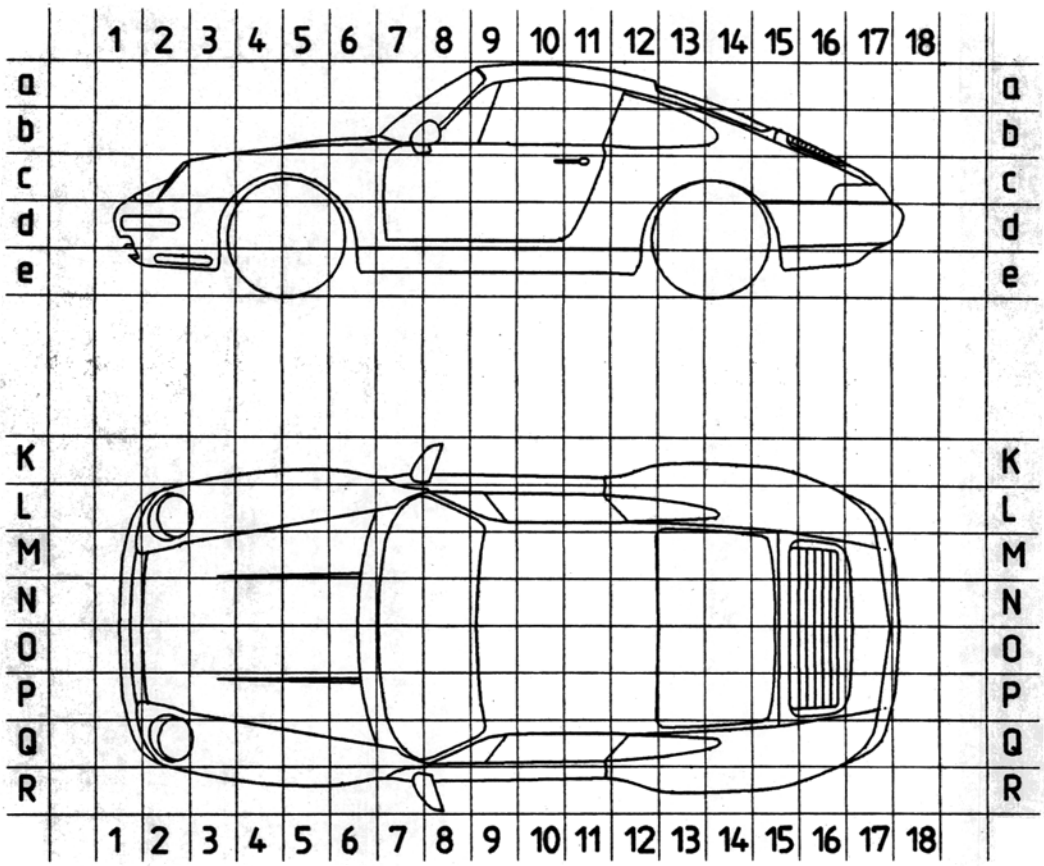

CONNECTORS AND ABBREVIATIONS

A B C D E

PLUG CONNECTIONS

CODE	NUMBER OF PINS	DESIGNATION, FUNCTION	POSITION IN VEHICLE LHD	POSITION IN VEHICLE RHD	NOTE
X 1/1	10	CONNECTION WL PASSENGER COMPARTMENT/ WL FRONT END	6cL	6cL	
X 1/2	10	CONNECTION WL PASSENGER COMPARTMENT/ WL FRONT END	6cL	6cL	
X 3	14	CONNECTION WL PASSENGER COMPARTMENT/ WL MOTOR	16cP	16cP	CARRIER PLATE
X4/1	14	CONNECTION WL PASSENGER COMPARTMENT/ WL MFI + DI	9eP	9eP	UNDER THE SEA
X4/2	14	CONNECTION WL PASSENGER COMPARTMENT/ WL MFI + DI	9eP	9eP	UNDER THE SEA
X11/1	14	CONNECTION WL PASSENGER COMPARTMENT/ WL DOOR DRIVER'S SIDE	6cQ	6cL	UNDER THE INST
X11/2	10	CONNECTION WL PASSENGER COMPARTMENT/ WL DOOR DRIVER'S SIDE	6cQ	6cL	UNDER THE INST
X12/1	12	CONNECTION WL PASSENGER COMPARTMENT/ WL DOOR PASSENGER'S SIDE	6cL	6cQ	UNDER THE INST
X12/2	10	CONNECTION WL PASSENGER COMPARTMENT/ WL DOOR PASSENGER'S SIDE	6cL	6cQ	UNDER THE INST
X20	14	CONNECTION WL PASSENGER COMPARTMENT/ WL HEATER, AIR CONDITIONER	6cM	6cM	UNDER INSTRUME
X24	10	CONNECTION WL PASSENGER COMPARTMENT/ WL TAILGATE	16cL	16cL	BOX RH SIDE OF
X25	10	CONNECTION WL PASSENGER COMPARTMENT/ WL TAIL LIGHTS	16cL	16cL	BOX RH SIDE OF
X26	12	CONNECTION WL PASSENGER COMPARTMENT/ WL CONVERTIBLE TOP	12cL	12cL	BEHIND SIDE PAN
X28	6	CONNECTION WL PASSENGER COMPARTMENT/ WL IGNITION LOCK	6cP	6cM	ON STEERING CO
X29	2	CONNECTION WL PASSENGER COMPARTMENT/ OIL TANK SENSOR	16cL	16cL	BOX RH SIDE OF
X31	4	CONNECTION WL PASSENGER COMPARTMENT/ WL INSIDE LIGHTS COUPE	15bM	15bM	BELOW THE PAR
X32	2	CONNECTION WL PASSENGER COMPARTMENT/ WL INSIDE LIGHTS CONVERTIBLE	6cQ	6cQ	UNDER INSTRUME
X33	2	CONNECTION WL PASSENGER COMPARTMENT/ WL SIDE TURN SIGNAL LEFT	7bQ	7bQ	IN LUGGAGE COM
X34	2	CONNECTION WL PASSENGER COMPARTMENT/ WL SIDE TURN SIGNAL RIGHT	7bL	7bL	IN LUGGAGE COM
X36	4	CONNECTION WL PASSENGER COMPARTMENT/ SWITCH LIFTING CONVERTIBLE TOP	12cL	12cL	BEHIND SIDE PAN
X37	8	CONNECTION WL PASSENGER COMPARTMENT/ WL SEAT LEFT	9eP	9eN	UNDER THE DRIV
X38	8	CONNECTION WL PASSENGER COMPARTMENT/ WL SEAT RIGHT	9eN	9eP	UNDER THE PAS
X39	6	CONNECTION WL PASSENGER COMPARTMENT/ WL LUGGAGE COMPARTMENT HOOD	7bL	7bL	ON RH SIDE OF L
X60	21	CONNECTION WL MOTOR/ WL MFI + DI	16cP	16cP	CARRIER PLATE
X65	6	CONNECTION WL DOOR DRIVER'S SIDE/ WL OUTSIDE MIRROR LEFT	8cR	8cK	DRIVER'S DOOR
X66	6	CONNECTION WL DOOR PASSENGER'S SIDE/ WL OUTSIDE MIRROR RIGHT	8cK	8cR	PASSENGER'S DO
X69	14	CONNECTION WL FRONT END/ WL HEATER, AIR CONDITIONER	6cM	6cM	IN LUGGAGE COM

M - NUMBERS

CONNEC

M 113	CANADA VERSION (DAYTIME RUNNING LIGHT)
M 139	ADJUSTABLE SEAT HEATING, LEFT SEAT
M 193	JAPAN VERSION
M 215	SAUDI-ARABIA VERSION
M 224	AUTOMATIC BRAKE DIFFERENTIAL
M 249	AUTOMATIC TRANSMISSION (TIPTRONIC)
M 339	FWD
M 340	ADJUSTABLE SEAT HEATING, RIGHT SEAT
M 383	SPORT SEAT LEFT ELECTRIC HEIGHT ADJUSTMENT
M 387	SPORT SEAT RIGHT ELECTRIC HEIGHT ADJUSTMENT
M 419	REAR PACKAGE TRAY
M 425	REAR WINDOW WIPER
M 437	COMFORT SEAT LEFT
M 438	COMFORT SEAT RIGHT
M 439	ELECTRIC CONVERTIBLE TOP
M 441	RADIO PREPARATION
M 451	LIMITED RADIO PREPARATION
M 454	CRUISE CONTROL
M 480	TRANSMISSION
M 487	NORWAY
M 490	AUDIO OPTION PACK
M 513	LUMBAR SUPPORT SEAT RIGHT
M 530	CODE LOCK
M 545	LARGE TANK
M 553	USA / CANADA VERSION
M 562	AIRBAG
M 564	WITHOUT AIRBAG
M 573	AIR CONDITIONING SYSTEM
M 576	WITHOUT REAR FOG LIGHT
M 586	LUMBAR SUPPORT SEAT LEFT
M 601	LITRONIC
M 602	HIGH MOUNTED STOP LIGHT
M 605	HEADLIGHT VERTICAL AIM CONTROL
M 614	TELEPHONE PREPARATION
M 650	POWER SUNROOF
M 651	POWER WINDOWS
M 659	ON-BOARD COMPUTER
M 680	DIGITAL SOUND PACKAGE

	FIELD
ARTMENT RIGHT	G/H34,K123
	C9,E36,G48,B58/59
	K/L3,J27/28,048/49,B53/54
	C/D45/46,B55,L143
	F45/46,B55,G/H148
	E/F16/17,B87/88, F88
UMENT PANEL DIVER'S SIDE	C16 ,F87/88
UMENT PANEL PASSENGER'S SIDE	E/F13,C87/88 ,H88
UMENT PANEL PASSENGER'S SIDE	C14,H87/88
NT PANEL RIGHT	G25/26
NGINE COMPARTMENT	010,013/14,076
NGINE COMPARTMENT	N4-6
	J-M76
	E52
	012/13,H73
NT PANEL LEFT	N/012
ARTMENT ON SIDE MEMBER LEFT	D/E9
ARTMENT ON SIDE MEMBER RIGHT	C2
L COVERING	N74
R SEAT	
EGER SEAT	N19,A70,E65/66
GGAGE COMP. LID HINGE	016,B77
ENGINE COMPARTMENT	B46,E48,K42,B55,M142,M148
	B18/19
DR	B13
	G23/24

ABBREVIATIONS

CODE	MEANING	CODE	
ABD	AUTOMATIC BRAKE DIFFERENTIAL	FOG	FOG LI
ABS	ANTILOCK BRAKING SYSTEM	GP	GROUN
AC	AIR CONDITIONING SYSTEM	HCS	HEADL
ADL	ADDITIONAL DRIVING LIGHTS	HF	HIGH F
BPAU	BRAKE BOOSTER	HFM	
BL	BACKUP LIGHT	HVAC	
CL	CLOSE	INJ. VALVE	
CLS	CENTRAL LOCKING SYSTEM	INS.C	
CU	CONTROL UNIT	IC	
CWL	CENTRAL WARN. LIGHT	LED	
CE	CENTRAL ELECTRIC	LHD	
CP	CONNECTING POINT	LF	
CLOCK	CLOCK SIGNAL		
CO	CARBON MONOXIDE		
DATA	DATA SIGNAL	NO	NUM
DEF	DEFROST	NTC	
DSP	DIGITAL SOUND PACKAGE	OP	
DP	DISCONNECTING POINT	PIN	
DI	ELECTRIC IGNITION SYSTEM WITH KNOCK CONTROL	POT	
ESO	ENGINE-SPEED SENSOR OUTPUT	PSD	
ESS	ENGINE SPEED SENSOR	PWM	PULSE
ETC	ELECTRICAL TRANSMISSION CONTROL	PL	PLUG
FA	FRONT AXLE	RA	REAR A
FL	FRONT LEFT	RL	
FR	FRONT RIGHT	RR	

TION ---- Z999 99

ELD INDICATION

TERMINAL ID

P IGNITION SWITCH POSITION 0	56 LIGHT SWITCH POSITION II
X IGNITION SWITCH POSITION I+II	56a/56b HIGH BEAM/LOW BEAM
15 IGNITION SWITCH POSITION II+III	57 LIGHT SWITCH POSITION I
R IGNITION SWITCH POSITION I+II+III	58 LIGHT SWITCH POSITION I+II
K DIAGNOSIS K	58R/58L SIDE MARKER LIGHT RIGHT/LEFT
L DIAGNOSIS L	58d INSTRUMENT LIGHTS
30 PERMANENT POSITIVE	Ti INJECTION SIGNAL
31 GROUND	Tn ROTATIONAL SPEED SIGNAL
54 STOP LIGHT	61 GENERATOR D+

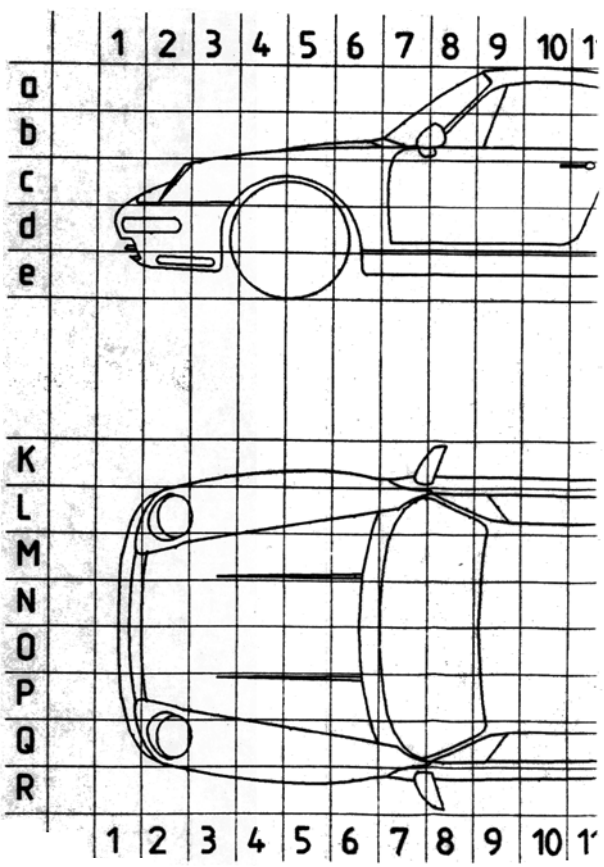

L	M	N	O	P

CODE	MEANING	CODE	MEANING
FOG	FOG LIGHT	RDK	TIRE PRESSURE CONTROL
GP	GROUND POINT	ROW	REST OF WORLD
HCS	HEADLIGHT CLEANING SYSTEM	RHD	RIGHT-HAND DRIVE
HF	HIGH FREQUENCY	RFL	REAR FOG LIGHT
HFM	HOT-FILM AIR MASS METER	SA	SAUDI ARABIA
HVAC	HEADLIGHT VERTICAL AIM CONTROL	SAFETY LAMP	SAFETY LAMP
INJ. VALVE	FUEL INJECTOR	SERVICE	SERVICE
INS.C	INSTRUMENT CLUSTER	SCS	COMBINED STEERING COLUMN SWITCH
IC	IGNITION CIRCUIT	SS	SPEED SENSOR
LED	LIGHT-EMITTING DIODE	THROTTLE	THROTTLE VALVE
LHD	LEFT-HAND DRIVE	TVS	THROTTLE VALVE SENSOR
LF	LOW FREQUENCY	TE	TERMINAL
MFI + DI	DIGITAL ENGINE ELECTRONICS	TEL MUTE	RADIO MUTING CONTROL
MS 2	MOTRONIC 5.2	TI	INJECTION TIME
NO	NUMBER	TN	SPEED
NTC	NEGATIVE TEMPERATURE COEFFICIENT	TURBO	911 TURBO
OP	OPEN	TRP	TWIN-COIL ROTARY POSITIONER
PIN	PIN	USA	USA
POT	POTENTIOMETER	WL	WIRING LOOM
PSD	PORSCHE LIMITED SLIP DIFFERENTIAL	WP	WELD POINT
PWM	PULSE WIDTH MODULATION	WW	WORLDWIDE
PL	PLUG		
RA	REAR AXLE		
RL	REAR LEFT		
RR	REAR RIGHT		

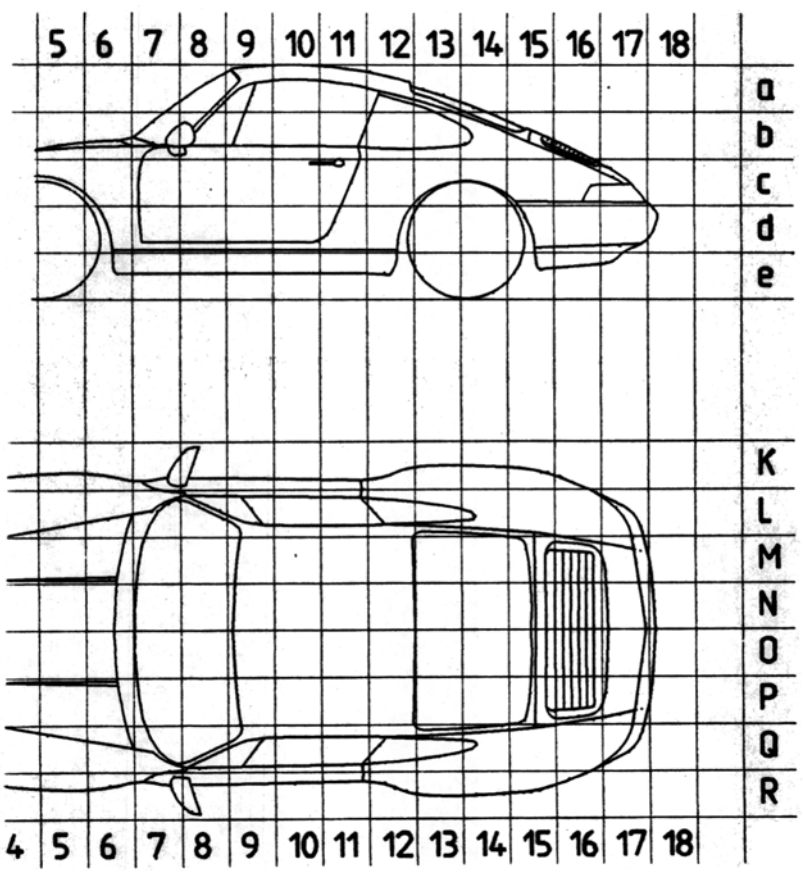

911 Carrera (993) MODEL 95/2 SHEET 17

CENTRAL ELECTRIC

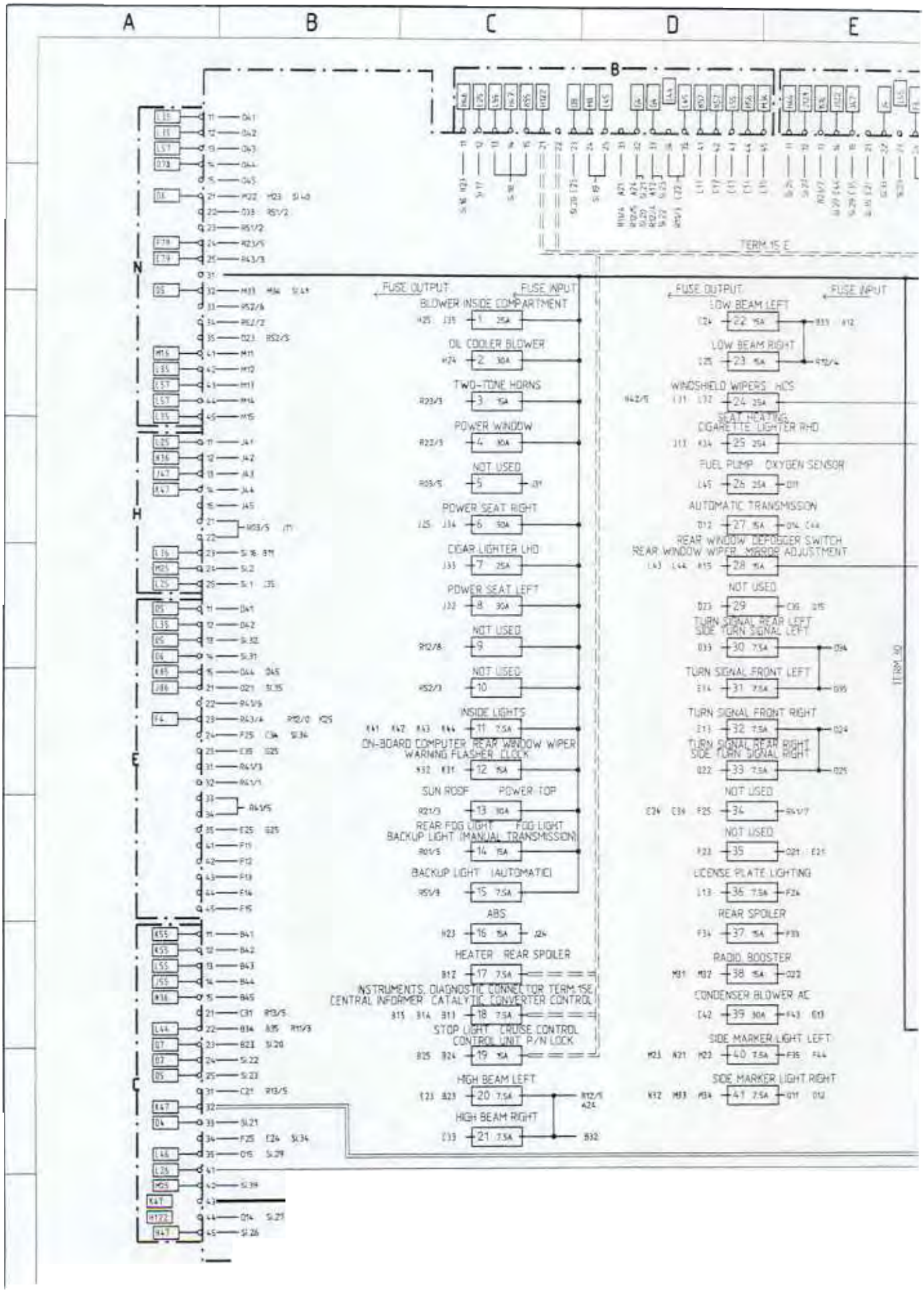

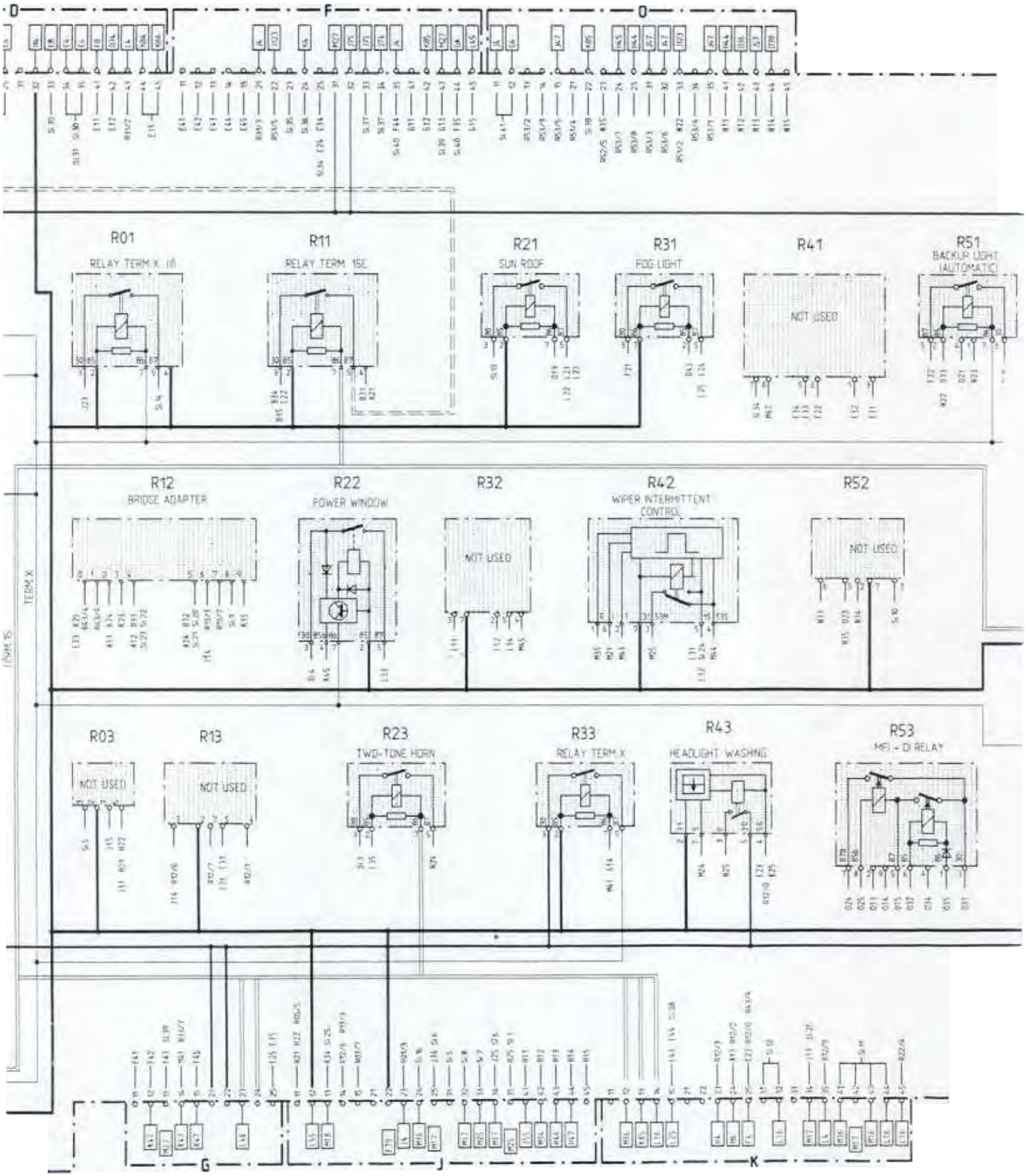
R01
RELAY TERM X, 1/I
R11
RELAY TERM 15E
R21
SUN ROOF
R31
FOG-LIGHT
R41
NOT USED
R51
BACKUP LIGHT (AUTOMATIC)
R12
BRIDGE ADAPTER
R22
POWER WINDOW
R32
NOT USED
R42
WIPER INTERMITTENT CONTROL
R52
NOT USED
R03
NOT USED
R13
NOT USED
R23
TWO-TONE HORN
R33
RELAY TERM X
R43
HEADLIGHT WASHING
R53
M51 - DI RELAY
TERM X
FROM 15
G
J
K

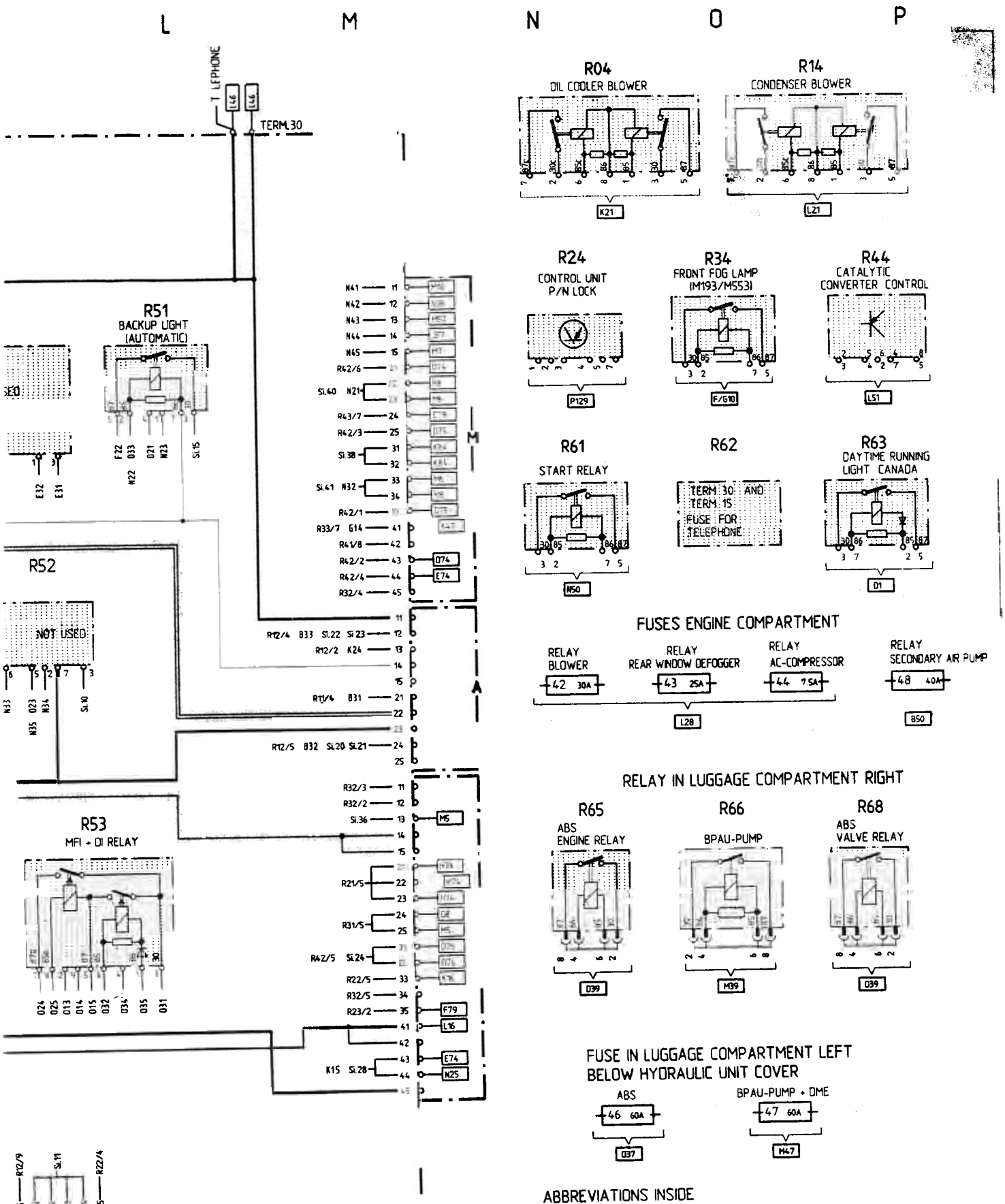
L
M
N
O
P
T LEPHONE
L46
L46
TERM.30
R04
OIL COOLER BLOWER
K21
R14
CONDENSER BLOWER
L21
R24
CONTROL UNIT
P/N LOCK
P129
R34
FRONT FOG LAMP
(M193/M553)
F/G10
R44
CATALYTIC
CONVERTER CONTROL
L51
R51
BACKUP LIGHT
(AUTOMATIC)
F22
D33
D21
N23
Si.15
N22
E32
E31
R61
START RELAY
N50
R62
TERM 30 AND
TERM 15
FUSE FOR
TELEPHONE
R63
DAYTIME RUNNING
LIGHT CANADA
D1
R52
NOT USED
N33
N35
D23
N34
Si.10
FUSES ENGINE COMPARTMENT
RELAY
BLOWER
42 30A
RELAY
REAR WINDOW DEFOGGER
43 25A
RELAY
AC-COMPRESSOR
44 7.5A
L28
RELAY
SECONDARY AIR PUMP
48 40A
B50
RELAY IN LUGGAGE COMPARTMENT RIGHT
R65
ABS
ENGINE RELAY
D39
R66
BPAU-PUMP
M39
R68
ABS
VALVE RELAY
D39
R53
MFI + DI RELAY
D24
D25
D13
D14
D15
D32
D34
D35
D31
FUSE IN LUGGAGE COMPARTMENT LEFT
BELOW HYDRAULIC UNIT COVER
ABS
46 60A
D37
BPAU-PUMP + DME
47 60A
M47
R12/9
Si.11
R22/4
ABBREVIATIONS INSIDE
FOR INST.: C3 PLUG CONNECTION
R01 RELAY
SI. FUSE
TERM. 31
TERM. 15
TERM. 15E
TERM. X
TERM. 30
ABBREVIATIONS OUTSIDE
FOR INST.: E2 CONNECTION WITH FIELD DATA

Repair Manual

911 Carrera
(993)

Volume VIII:
Diagnosis

Dr. Ing. h.c. F. Porsche Aktiengesellschaft

Volume I:	**Overall vehicle – General**	**0**
General	Maintenance, diagnosis	03
Engine		
	Engine	**1**
	Engine – Crankcase, mounting	10
	Engine – Crankshaft, pistons	13
	Engine – Cylinder head, valve drive	15
	Engine – Lubrication	17
	Engine – Cooling	19
	Fuel, exhaust system, engine electrical system	**2**
	Fuel supply, control	20
	Exhaust system – Turbocharging	21
	Fuel system, electronic injection	24
	Fuel system, K-Jetronic	25
	Exhaust system	26
	Starter, power supply, GRA	27
	Ignition system	28
Volume II:	**Transmission**	**3**
Transmission	Clutch, control	30
Manual transmission	Manual transmission – Controls, case	34
	Manual transmission – Gears, shafts, inner operation	35
	Final drive, differential, differential lock	39
Volume III:	**Transmission**	**3**
Transmission	Automatic transmission – Torque converter	32
Automatic	Automatic transmission – Controls, case	37
transmission	Automatic transmission – Gears, control	38
	Final drive, differential, differential lock	39
Volume IV:	**Chassis**	**4**
Chassis	Front wheel suspension, drive shaft	40
	Rear wheel suspension, drive shaft	42
	Wheels, tires, alignment	44
	Anti-Lock System (ABS)	45
	Brakes – Mechanical	46
	Brakes – Hydraulics, regulator, booster	47
	Steering	48

Volume V:	**Body**	**5**
Body	Body front section	50
	Body center section, roof, frame	51
	Body rear section	53
	Hoods, lids	55
	Front doors, Central Locking System	57
	Exterior body equipment	**6**
	Sunroof	60
	Soft top, hardtop	61
	Bumpers	63
	Glasses, window control	64
	Exterior equipment	66
	Interior equipment, passenger protection	68
	Interior body equipment	**7**
	Trim, insulation	70
	Seat frames	72
	Seat upholstery, covers	74
Volume VI:	**Air conditioning**	**8**
Air conditioning	Heater	80
Vehicle electrics	Ventilation	85
	Air conditioning	87
	Auxiliary air conditioning system	88
	Electrical system	**9**
	Instruments, alarm	90
	Radio, telephone, on-board computer	91
	Windshield wipers and washer	92
	Exterior lights, lamps, switches	94
	Interior lights, lamps, switches	96
Volume VII:	**Electrical system**	**9**
Wiring diagrams	Wiring	97
Volume VIII:	**Diagnosis**	**D**
Diagnosis	Self-diagnosis	03
	DME Diagnosis	24
	Tiptronic Diagnosis	37
	PDAS Diagnosis	39
	ABS Diagnosis	45
	Airbag Diagnosis	68
	Heater Diagnosis	80
	Alarm Diagnosis	90

Preface

Structure

The "Technical Literture" for the "911 Carrera (993)" model is basically structured as before, i.e. the structure follows the familiar repair groups.

A new feature is that the structure includes the main groups **0 to 9** and the main group **D**.

Main groups:	0	Complete vehicle – General
	1	Engine
	2	Fuel, exhaust, engine electrical system
	3	Transmission
	4	Chassis
	5	Body
	6	Body equipment, outside
	7	Body equipment, interior
	8	Air conditioning
	9	Electrical system
	D	Diagnosis

Layout

The layout in the below items remains unchanged throughout the repair manual

1. Table of tightening torques
2. Special tools required
3. Exploded views
4. Legends for the exploded views
5. Assembly notes / use of special tools

As a new feature, however, the former item 6 (Repair group diagnosis) is no longer filed in the volume corresponding to the respective repair group. The **Diagnosis test plans / diagnosis procedures** have been combined in a **separate Diagnosis volume** broken down according to the main groups 0 to 9.

Another new feature is that the contents of the "Service Information Technik" are indicated in the Repair Manual. This brochure concentrates on a description of the design and function of components and of the new features introduced for a particular model year.

Service Number

All major repair procedures and repair descriptions are identified by a two- or four-digit **Service Number** completed by two additional digits to identify the work that corresponds to the first six digits of the working position number in the Working Times and Damage Catalog.

Example: 30 37 37 Dismantling and assembling clutch control shaft

Explanation: **30** **37** **37** 50 (full working position number)

Repair group
here: Clutch, control

Component designation
here: Clutch control shaft

Activity
here: Dismantling and assembling

Index
here: Removed

Presentation in the various documents

30 37 37 50	Working position no. from **Working Times and Damage Catalog**, consisting of repair group, component designation, activity and index
30 37 37	Six-digit number in **Repair Manual**, consisting of repair group, component designation and activity
30 37	Service number in **Service Information**, consisting of repair group and component designation

Goal

The introduction of a service number in the "technical literature" is intended to facilitate standardization and positive identification to allow direct cross-referencing among the various documents This is of particular importance with regard to the use of electronic media.

VIII Diagnosis

The Repair Manual of the 911 Carrera (993) also includes the 911 Carrera 4 manual (993 four-wheel drive). The 911 Carrera (993) is the basic model covered by the repair operations described in this Manual. "911 Carrera (993)" is also indicated in the header of each page.

Descriptions of repair operations that deviate for the 911 Carrera 4 will be included after the respective 911 Carrera section. The repair descriptions of both models are separated by a cover page. All pages included after the cover page (separation sheet) have the "911 Carrera 4" heading. To facilitate distinction, the page numbering will start with 100.

D Diagnosis

D	System Tester 9288 Operating Instructions	D - 1
D	Location of diagnosis socket	D - 11
03	**Maintenance**	
03	Maintenance .	03 - 1
24	**DME Diagnosis**	
24 05	System M 04 .	24 - 1
37	**Diagnosis Tiptronic**	
37 01	System G 03	37 - 1
37 01	System G 10	37 - 43
45	**Diagnosis Anti-Lock System**	
54 02	System ABS 5 and System ABS 5 / ABD	45 - 1
68	**Airbag Diagnosis**	
68 01	System B 02 . .	68 - 1
68 01	System B 03 . .	68 - 19
80	**Diagnosis Heater System**	
80 01	System H 05 / H 06	80 - 1
90	**Diagnosis Alarm System**	
90	System I 00 / I 01	90 - 1

Printed in Germany - 22, 1997

Survey of contents of Service Information Technik '95

The Service Information gives a detailed description of the technical features of the new 911 Carrera.

	Rep. Gr.	Page
Engine		
General		1 - 1
Engine cross-sections	10	1 - 4
Full-load curve		1 - 6
Belt pulley	13	1 - 8
Pistons	13	1 - 10
Hydraulic valve lash adjuster	15	1 - 16
Setting the timing	15	1 - 18
USA - auxiliary air pump		1 - 19
Fuel and ignition systems		
General		2 - 1
DME - Schematic	24	2 - 2
Fuel - air flow	24	2 - 3
Exhaust gas flow	26	2 - 5
DME control unit 2.10.1	24	2 - 9
Mass air flow sensor	24	2 - 12
Throttle potentiometer	24	2 - 18
Ignition system	28	2 - 24
Plausibility test		2 - 28
Diagnosis		2 - 29
Auxiliary air pump	26	2 - 33
Power transmission		
Transmission	30	3 - 1
Clutch	30	3 - 2
Manual transmission	34	3 - 3
Transmission ratios		3 - 6
Gear set	35	3 - 8
Synchromesh	35	3 - 9
Final drive	39	3 - 13
Oil supply		3 - 15
Porsche Tiptronic	37	3 - 16
Modifications for the '95 model year		3 - 17

	Rep. Gr.	Page
Running gear		
General		4 - 1
Front axle	40	4 - 2
Steering	48	4 - 7
Rear axle	42	4 - 8
Elasto-kinematic toe correction	42	4 - 12
Coil springs (layout)	42	4 - 13
Wheels, tires	44	4 - 15
Suspension alignment	44	4 - 17
Brakes	47	4 - 20
Bleeding the brakes	47	4 - 23
ABS 5	45	4 - 24
Operation of the ABD	45	4 - 30
Diagnosis ABS/ABD	45	4 - 34
Body		
General		5 - 1
Constructional dimensions	50	5 - 4
Aerodynamics and air ducting	50	5 - 8
Body equipment		
Body equipment		6 - 1
Color scheme as of 1995 model year	60	6 - 1
Windows	64	6 - 8
Airbag system	68	6 - 14
Body - interior trim		
Body - interior trim	70	7 - 1
Seats	72	7 - 5
Heating, air conditioning, ventilation		
Particle filter	85	8 - 1
Air ducting	80	8 - 3
Heating - air conditioning unit	85	8 - 5
Heating - air conditioning unit	87	8 - 6
Series resistor of rear blower	80	8 - 9

	Rep. Gr.	Page
Electrical system		
Instruments	90	9 - 1
Alarm system/central locking system	90	9 - 3
Heated rear window	64	9 - 6
Zentral Information System (Z I)	91	9 - 7
Radio "Bremen RCM 43"	91	9 - 10
New radio connection (VDA)	91	9 - 11
Sound package (M 490)	91	9 - 14
Telephone D - network	91	9 - 17
Windshield wiper and washer system	92	9 - 20
Headlights	94	9 - 23
Front end light cluster	94	9 - 28
Tail lights	94	9 - 29
Engine compartment baseplate	97	9 - 33
Wiring diagram		9 - 36
Summary		
Maintenance		0 - 1
Number ranges		0 - 4
Technical data		0 - 5

System Tester 9288 Operating Instructions

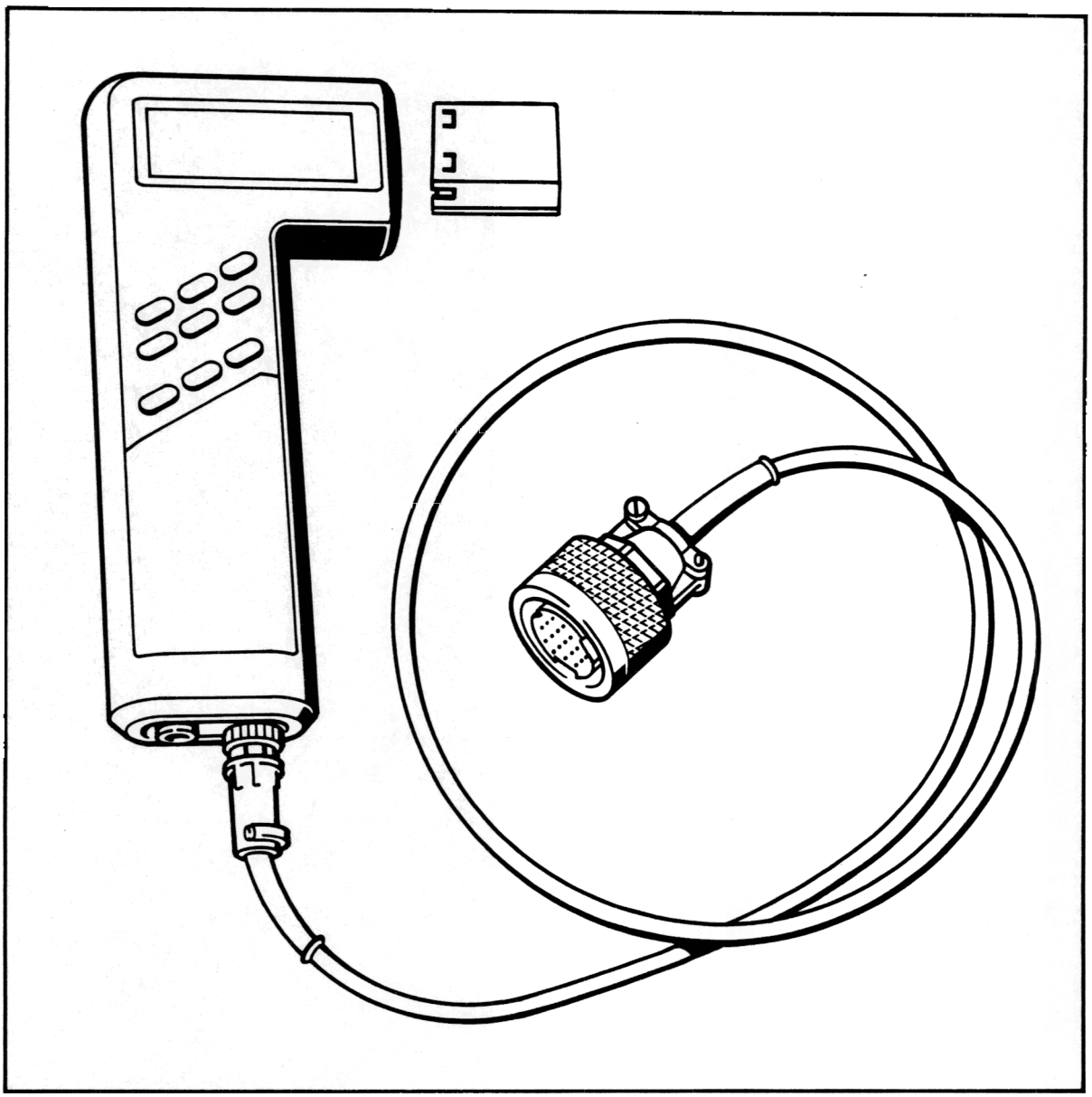

General information

Usage

The System Tester 9288 is a self-diagnosis tester with microprocessor control.

It allows all systems fitted with a diagnostics interface to ISO standards to be checked. The following operations may be carried out:

- Reading out the fault memory
- Checking the actuators (drive links)
- Checking the switching inputs
- System adaptation
- Knock sensing
- Reading out the actual values

Faults

The System Tester 9288 is a sophisticated electronic device. To prevent damage to the unit due to improper handling, please pay close attention to the Operating Instructions.

In case of tester failure, please check the following items before returning the tester for repair:

1. Was the tester operated incorrectly?

2. Is the charging state of the accumulator o.k.?

3. Is the adapter lead o.k.?
   When checking the adapter lead, please note that a highly sensitive electronic adapter circuit is fitted near the 19-pin connector.

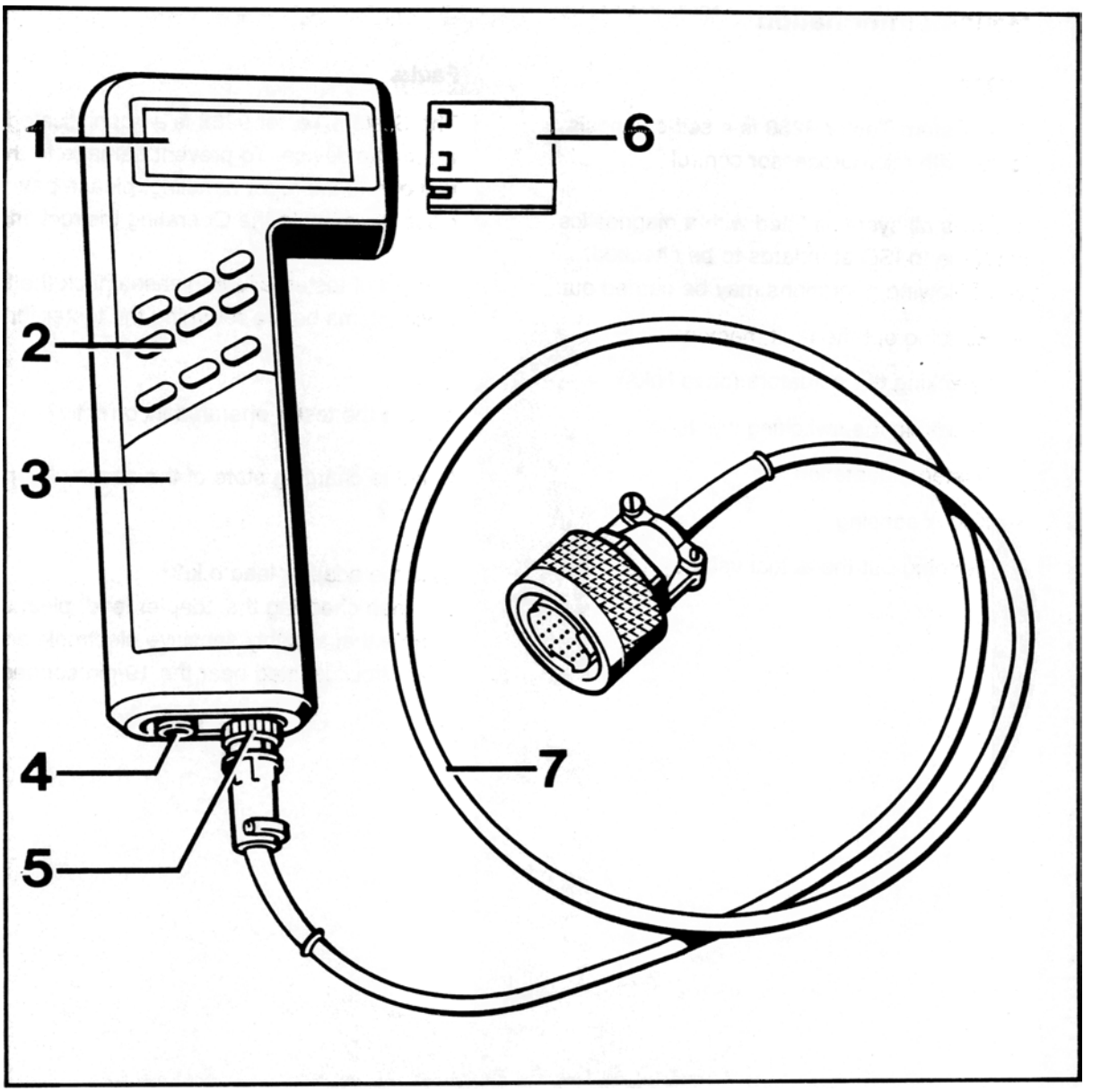

855-03B

Design of the tester

Item, designation, operation	Remarks
① LCD display Operation: Dot matrix 5 x 8 4 lines of 20 characters each Foreign languages possible Illumination	If the System Tester 9288 is switched on without the program module, the Tester is switched off after the self-test is run and a note concerning the missing program module is displayed.
② Keyboard Operation: Keys 1, 2, 3 Select keys Key < > Paging up and down Key H For Help menu, e.g.: Illumination Stored displays Control unit overview Printer setting Switch off unit Key N Return to next higher program level after finishing a test run or return to last display while a test is run. Store display  Output stored display 	Switch on: with any key Switch off: (automatic) 180 s after last actuation of any button or if no data stream flows across the serial interface. The last field in the right-hand top corner is filled out completely, i.e. this is a stored display, not a current display.

③ Power supply
If the voltage is insufficient, "Charge accumulator" is displayed. If this warning is not observed, the device is switched off.

Built-in accumulator with NiCd batteries. System Tester 9288 must be off when it is charged for the first time.
Charging time > 8 hours

Supplied with tester. After charging: Operating time
4 - 8 hours without illumination
1 - 2 hours with illumination

Connect to vehicle battery via adapter lead (item 7) 9288/1.

Connection to ISO interface
Charging power supply

Charger (accessory)

For testing operation and to charge the NiCd batteries

④ Socket for input and output devices
Connection feature for printers (e.g. Epson, IBM, Hewlett Packard (HP), program charging station or similar devices.
For interface terminal assignments, refer to manual of the respective device.
Printer cable for Standard D 25
BOSCH No. 1 684 465 193
Printer cable for Epson
BOSCH No. 1 684 465 194

The System Tester 9288 sends data with the following settings: 8 data bits / 1 start bit / 1 stop bit / No Parity (for printer adaptation)

⑤ Socket for adapter lead 9288/1
Function 1: Reading out the data
Function 2: Connection for power charger

Input for flashing code support.
Charging the fitted accumulator

⑥ Insertable program module

 C-MOS!
Do not touch connector!

Operation:
Operating system
LCD triggering of keyboard
Interface communication
Calculations and data transformations

Plug in module:
Remove rubber protection,
Push in module all the way.

⑦ Adapter lead 9288/1

Connection

Observe the following points:

The vehicle must not be in gear (automatic transmission set to N or P) - risk of accidents!

- Work on the vehicle only with the ignition switched off.

After connecting the tester, the instructions indicated under the Test item are displayed on the System Tester 9288.

Charging via battery charger

Connect the System Tester 9288 to the charger (item 5).

Diagnosis

Connect the System Tester 9288 via the adapter line 9288/1 to the diagnostic connector of the vehicle.

Switch on tester and operate according to the instructions displayed.

No diagnosis possible

(refer to page 03 - 3)

Testing

Module contents:

Tracking the establishment of communication, communication with the control unit, reading out the fault memory and selection of the Help menu, drive link diagnosis, input signals, actual values and system adaptation, knock registration.

Connect System Tester 9288 (see above)

Switch on System Tester
(with any key)

Display:

```
Porsche
Eprom module eng
Module level xx.xx.xx
Version x.x
```

If no special instructions are given on this display, you may always switch on with the > key!

Due to the fact that the System Tester 9288 can store fault displays, the following display appears if faults are stored in the display memory:

```
Stored displays
erased?
1 = Yes
3 = No
```

The stored displays may now be erased or printed. To print, press button 3 (do not erase displays) and use the H key to select the Help menu (for Help menu, refer to p. D - 9).

To proceed in the menu, the stored displays must now be erased. A selection of the vehicle models is then displayed.
After a vehicle type has been selected, the following message is displayed:

```
Connect adapter
cable to test plug
Ignition "on"
When completed   >
```

The next display is:

```
Wait
for data
xxxxxxxxxxxxxxxxxxx
Break off test:  N
```

After a short waiting interval, the System Tester 9288 reports all systems installed in the respective vehicle. If an # is shown in front of the vehicle, this means that at least 1 fault has been stored in the corresponding system.

```
Installed systems
1 = # DME
2 = # ABS/ABD
3 = Airbag >
```

Help menu

The Help menu may be selected from any display by pressing the H key. Return to the start display with the N key.

```
Help menu
1 = Illumination
2 = Turn tester off
3 = CU chart
```

To continue, press e.g. key 1

Key 1

The display illumination is switched on and the system returns to the previous display.

If e.g. the > key is pressed when the help menu is displayed,

```
Help menu
1 = Illumination
2 = Turn tester off
3 = CU chart      >
```

another part of the Help menu is displayed:

```
< Help menu
1 = Printer setting
2 = Baud rate
3 = Stored displays
```

To continue, press e.g. key 1

```
Printer adjustment
1 = IBM
2 = HP Quiet Jet
3 = Epson
```

The printer selection is used to set the tester for the printer model selected.

The printer selected and the set baud rate are highlighted by the # character.

Storing measurement displays (Key )

This key allows all displays to be stored manually. The following displays are stored automatically:

- Control unit identification

  Installed systems

  All faults present

The following note is displayed when the storage limit is reached.

```
Display memory
full!

Return:          N
```

Displaying the stored measurement displays

(Key )

The stored displays can be called up with this key.

The stored displays can be displayed for the selected system by using the < or > key.

The system is selected with the keys 1, 2 or 3.

Location of diagnosis socket

The diagnosis socket of the System Tester 9288 is located in the passenger footwell under a separate cover. The cover is held in place with clips.

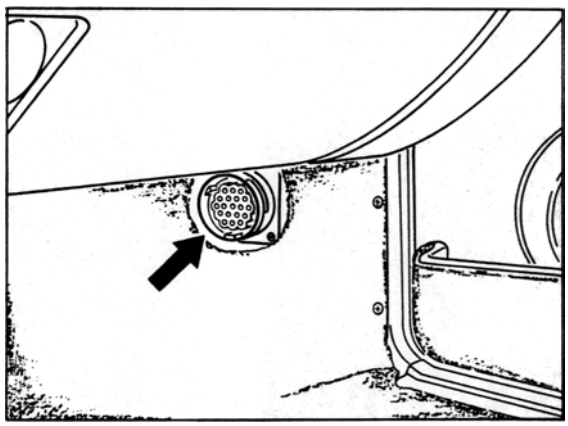

1903-D

Starting with Model Year '95, the diagnostic socket is located on the left-hand side of the center console and is fitted with a plugged-on cover.

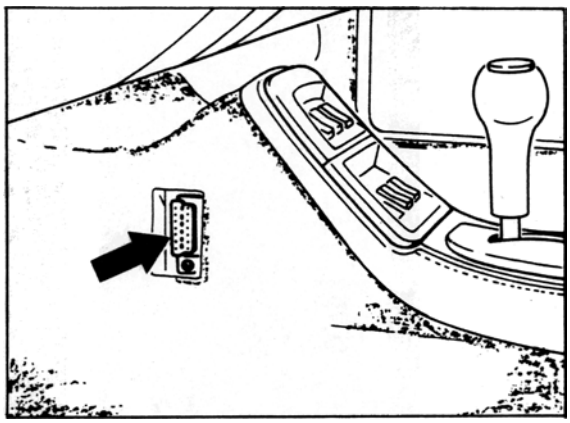

1967-03

Tamper-proofing of control units

As of Model Year '95, the control units located below the driver seat are covered to prevent unauthorized tampering. This cover is protected by shear-off bolts.

If possible, test and/or measure ate the component affected or at the connectors during troubleshooting.

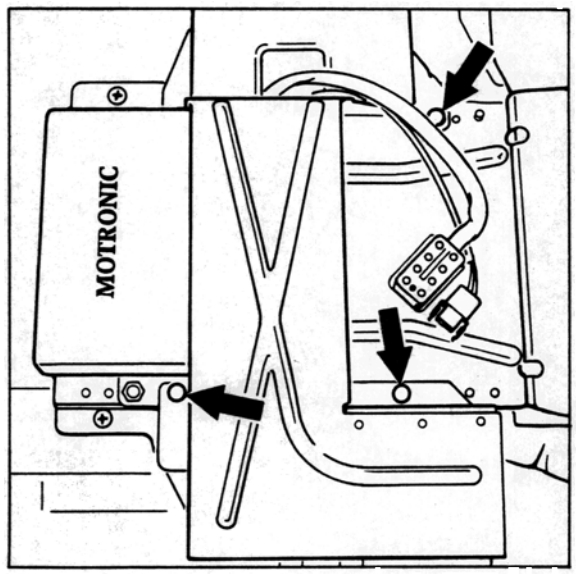

03 Self-diagnosis

General notes

When starting and running the diagnosis, the ignition must be on. If the ignition was off during the diagnosis, diagnosis may be resumed after switching on the ignition and pressing the > key, i.e. the tester returns to the position that the diagnosis was interrupted at.

In the same manner, pressing the > key causes the diagnosis to be resumed from the position at which the diagnosis was interrupted, provided that specified criteria from the below table caused the diagnosis to be interrupted.
The diagnosis cannot be resumed, however, if the criteria are still present, e.g.:
Heater: Oil temperature > 105°C.

Criteria causing the diagnosis to be interrupted

DME:
Speed > 2000 rpm

ABS/ABD:
Speed > 15 min/n

Tiptronic:
Speed > 1500 rpm

Airbag:
none

Alarm:
none

Heating:

1. Right-hand mixing chamber temp. > 80° C
2. Left-hand mixing chamber temp. > 80°C
3. Rear fan temperature > 95°C
4. Oil temperature > 105°C

Criteria for starting the diagnosis

DME:
Speed < 1200 rpm

ABS/ABD:
Road speed = 0 kmh

Tiptronic:
Speed < 1500 rpm
Road speed < 10 km/h (6 mph)

Airbag:
None

Alarm system:
None

Heating:
1. Right-hand mixing chamber temp. < 80°C
2. Left-hand mixing chamber temp. < 80°C
3. Rear fan temperature < 95°C
4. Oil temperature < 105°C

One troubleshooting requirement is that the testing person

- is familiar with the location of components, operation and technical relationships among the systems to be tested
- is able to read and analyze Porsche wiring diagrams
- is familiar with functions of circuits and relays
- is able to operate and analyze testers such as oscilloscope, voltmeter, ohmmeter and ammeter

The fault text in the display indicates a fault path, i.e. the fault may be present anywhere along the path, starting from the control unit across all connectors up to the component itself.
Before reading out the fault memory, do not try to locate the fault e.g. by pulling off connectors etc. as this would cause a fault to be stored in the fault memory.

Note for System Tester 9288

If the Tester displays "**...not present**"", this may mean:

- Fault was not present when the test condition existed

  In case of an intermittent fault, the + symbol is also displayed.
  Example: "**...not present +**"
  Remedy: Check path visually

  Test conditions under which the fault was tested do not correspond to the ambient conditions when the fault occurred.
  Remedy: Meet the ambient conditions displayed on the tester

If the tester displays "**Signal unplausible**", this may mean that

- the signal of the monitored component is not within the tolerance range

Explanation of the counter displayed on the Tester display

When the fault occurs for the first time, the counter is always set to 50. If a lower figure is displayed, calculate the difference between the 50 and the number indicated. This value is equal to the combination of – Starting procedure, meeting the test requirements and non-presence of the fault –. When the number 0 is reached, the fault path in the control unit is erased.
If the fault status changes from not present to present at a figure below 50, the counter is reset to 50. If a figure above 50 is displayed, the difference corresponds to the number of intermittent contacts that have ocurred. Even when the values are above 50, the counter counts back to 0 when the above combination is met.

No diagnosis possible

If the System Tester 9288 cannot enter the diagnosis, check the folowing items:

Check adapter lead 9288/1 for continuity
Check K and L wire on adapter lead 9288/1 for continuity.

Socket 3 (8-pin connector) to pin 7 (19-pin connector)
Socket 7 (8-pin connector) to pin 8 (19-pin connector)

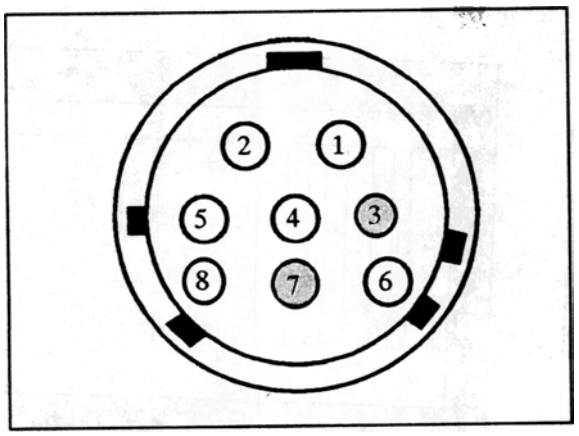

Connector on tester 1211-03

Socket 3 = L wire

Socket 7 = K wire

Check voltage supply
Check ground and terminal 15 on adapter lead 9288/1 for voltage supply.

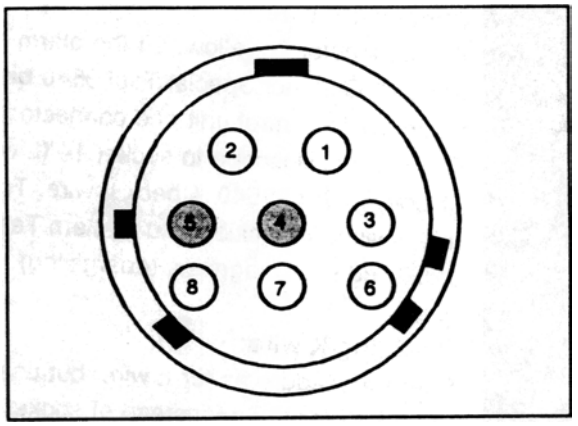

Connector on tester 1203-03

Socket 4 = Ground

Socket 5 = Terminal 15

Check K and L wires with oscilloscope and Special Tool 9540

Checking L wire:
Pull connector 2 (yellow) off the alarm control unit. Connect Special Tool 9540 between alarm control unit and connector 2. Connect oscilloscope to socket 14 (L wire) of Special Tool 9540. Check L wire. To do this, switch on ignition and System Tester 9288 and start diagnosis (energizing).

Checking K wire:
Same procedure as for L wire, but use socket 15 for K wire instead of socket 14 for L wire.

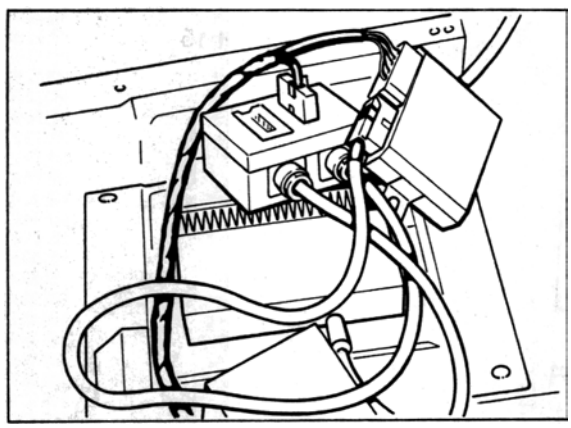

1214 - 03

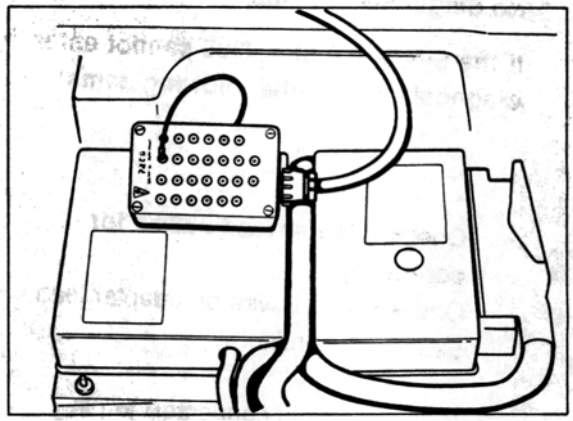

1215 - 03

The following signal must be displayed for the L wire:

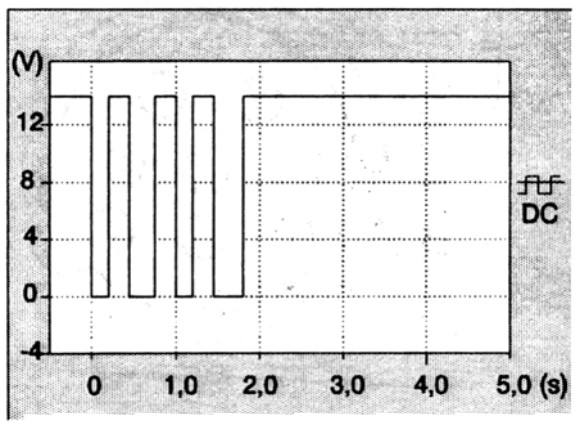

1212 - 03

The following signal must be displayed for the K wire:

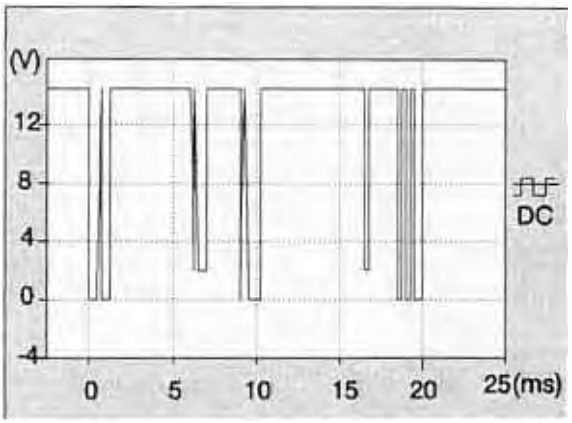

1213 - 03

Note: If the signals displayed deviate from the specifications, this may be due to interference generated by a control unit connected to the K or L wire (for diagnosable systems, refer to wiring diagram). Pull one connector after another off the control units and repeat checking the K and L wires. Start with the alarm control unit as described below. If the last control unit has been disconnected, one of the control units that had been disconnected must be reconnected again. Otherwise no signal can be generated anymore.

Note: The on-board computer (rev counter) is connected to the K and L wires but is not diagnosable. It may cause interferences, however!
If the airbag control unit is disconnected, power supply to term. 15 of the DME control unit is interrupted.

Disconnect alarm control unit and install jumper

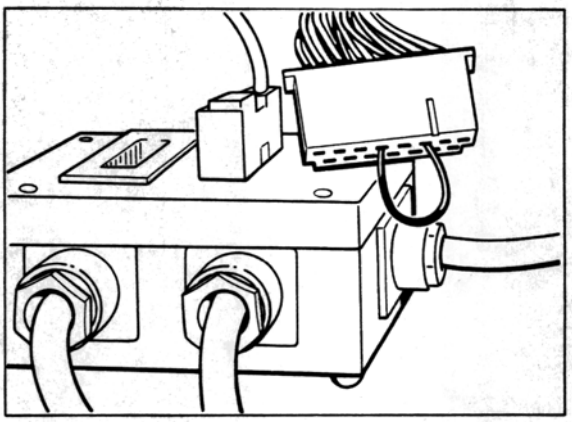

1216 - 03

Pull connector 1 (black) off the alarm control unit. Connect jumper to connector 1 of the alarm control unit, pin 4 and pin 6.

Check signals of the K and L wire again as described above

- **Disconnect other control units**
  Disconnect next control unit, switch on ignition, switch tester off and on again and start diagnosis (energize again).
  Check signals of K and L wire.
  Repeat procedure until all control units have been disconnected.

Check K and L wires for short to ground

Check all control units for continuity to diagnosis socket

Diagnosis / Troubleshooting

DME

System M 04

Contents

	Page
Precautions	24 - 3
Important vehicle information	24 - 4
Equipment	24 - 5
Description of DME control unit	24 - 7
Arrangement and functions of components	24 - 9
Fault memory (Overview of possible fault texts)	24 - 19
Overview - Test point, fault code, fault text	24 - 25
Control unit - terminal configuration	24 - 27
Test plan	24 - 29
Test points	24 - 31
Checking fuel pressure	24 - 53
Check-Engine lamp	24 - 55

Precautions

Increased demands of modern engines on the ignition systems and a desire for freedom from maintenance have led to the introduction of electronic ignition systems in standard production some time ago. Normally the ignition power of electronic systems (of almost all makes) is greater than that of conventional systems and further power increases can be expected in the future. This places electronic ignition systems in a power range where touching live parts or terminals may by hazardous (this applies both to primary and to secondary circuits).

In this context, we must point out that all relevant national safety regulations and legislation must always be observed when working on or testing ignition systems. The ignition (i.e. ignition or power supply) must always be switched off when working on the ignition system.

Such work includes:

- Connecting engine testers, e.g.
  timing light, dwell angle/speed tester, oscilloscope etc.

  Replacing ignition system components, e.g.
  spark plugs, ignition coil, distributor, ignition leads etc.

The above hazardous voltage will be present in the entire system should it be necessary to switch on the ignition for ignition tests or engine adjustments.

Consequently, sources of hazardous voltages are not limited to the individual components of the ignition system (such as distributor, ignition coil, control unit, ignition tackle etc.) but are also present on wiring harnesses, plug connections and testers.

Important Vehicle Information

Always turn off the ignition or disconnect the battery for resistance tests. (If this is not done the tester may destroyed).

Always disconnect the rpm sensor plug for compression tests. (If this is not done, hazardous high voltages and insulations damage to the ignition coil, high-voltage distributor and ignition leads may result).

The specified ignition coil (refer to Order No.) must not be replaced by a different coil.

Never connect a suppression capacitor to ignition coil terminals 1 and 15.

Never connect ignition coil terminal 1 to ground for burglar alarm. (Ignition coil and control unit may be destroyed).

Never connect the positive battery terminal or a test lamp to ignition coil terminal 1 (The control unit will be destroyed).

Never disconnect the ignition lead from ignition coil terminal 4 to high-voltage distributor terminal 4 while the engine is running.

Voltage flashover from ignition coil terminal 4 to coil terminals 1 and 15 must not occur. (Control unit may be destroyed).

To avoid destruction of the control unit, the secondary circuit ot the ignition system must be suppressed with at least 4 kΩ, the original distributor rotor with 1 kΩ suppression resistance having to be installed.

Disconnect DME control unit only after turning off the ignition.

Flashover or disruptive discharge in the area of the high-voltage distributor cap (poor insulation) may destroy the control unit.

Never disconnect the battery when the engine is running.

Battery polarity reversal could lead to destruction of the ignition coil and the DME control unit.

External engine starting with than 16 V or with a boost battery charger is not permitted.

When pulling off the connectors, e.g for mass air flow sensor, throttle switch, injection valves etc., make sure the inside gasket is not lost.

Always follow the accident prevention regulations when working on the fuel system.

Equipment

Equipment Required for DME Testing:

- Diagnostics tester 9288 with connecting leads

  1 oscilloscope approved by Porsche

  1 digital display multimeter with an internal resistance of at least 50 kW

  1 Bosch L-Jetronic test lead, Bosch No. 1684 463 093 (check lead for correct polarity at plugs).

  2 control unit plug test leads (shop-made) with 2 tab connectors No. 17.457.2 fitted to avoid damage to the plug terminals in the control unit plug during testing.

  2 adapter test leads, consisting of:
  4 plug connectors N 017.483.1 with
  2 leads approx. 150 mm long, soldered.

  1 three-pin test lead (e.g. VAG 1501).

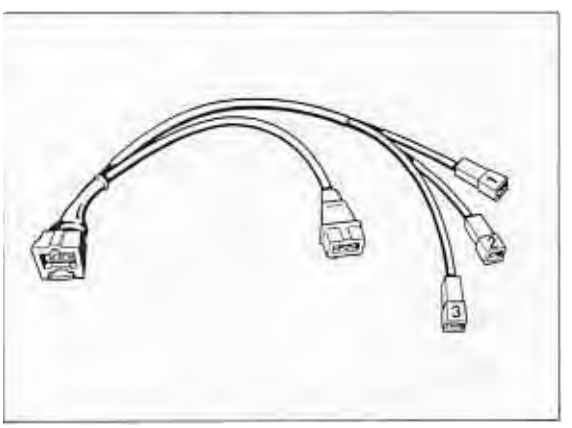

  2 control unit plug test leads (shop-made) with 4 tab connectors N 17.457.2.

The test leads must always be used for the tests!

All sender and ignition timing signals of Porsche vehicles can be checked with the engine testers recommended by Porsche. Since instructions for connection of testers on a car will differ depending on the equipment manufacturer, these instructions must always be followed to ensure correct tester connection.

The following signals can be checked with the oscilloscope:

Engine speed

Vehicle speed

ti (injection time)

Idle stabilizer

Hall signal

Tank venting signal

Note for USA:

If a fault that affects exhaust gas composition is detected by the Check Engine lamp and is read out, repair is possible with standard workshop tools.

Note

Information on Special Tool test adapter 9543.

The test adapter has to be used when testing electrical wires, e.g. at the control unit plug. The test adapter protects the plug terminals and facilitates locating the individual pins.

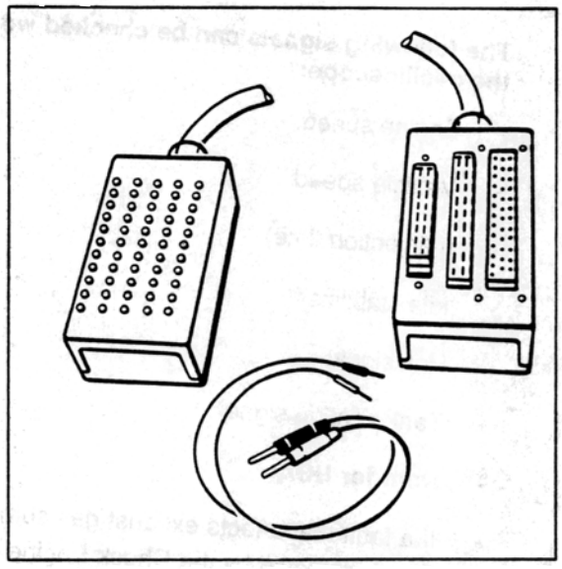

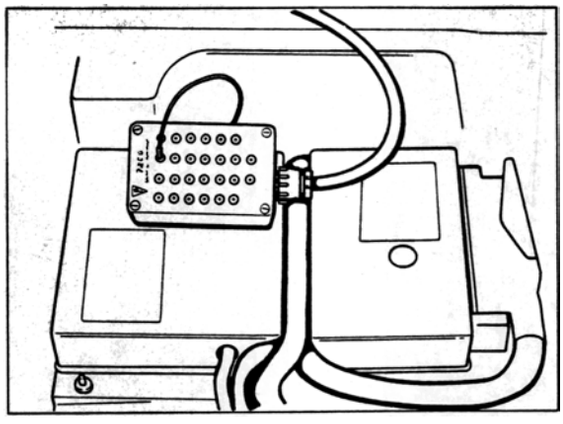

Diagnosable DME Control Unit

A self-diagnosis feature with fault memory is incorporated into the DME control unit to permit certain faults to be detected and stored.

The DME control unit has a permanent positive connection to prevent deletion of detected and stored faults when the iginition is switched off. Detected faults remain stored in the fault memory for at least 50 engine starts.

Caution:
If the DME control unit plug or the battery is disconnected, the fault memory will be cleared.

Tester Connections:
The diagnostics socket is located on the right-hand side of the passenger footwell.

Note:
The fault path and fault code displayed on the System Tester 9288 will be complemented by the relevant test point in the troubleshooting plan.

The Eprom module version 5.0 may be used to select the following menus that may in turn be used to select additional submenus. These are displayed by the System Tester in text form.

Selectable menus:

- Fault memory

  Drive links

  Input signals

  Knock registration

  Actual values

  Drive link active

This DME diagnosis/troubleshooting plan is based on the contents of the fault memory. Paths not covered by self-diagnosis are diagnosed by conventional means.

Troubleshooting requires that the person performing the tests

is familiar with the location of components, function and technical relationships of the systems beeing tested

is able to read and evaluate Porsche wiring diagrams

knows the functions of circuits and relays

is capable of using testers such as oscilloscope, voltmeter, ohmmeter and ammeter, as well as of evaluating the test results.

The fault text displayed indicates the fault path, i.e. the fault may be present anywhere, from the control unit, across all connectors up to the component itself.
Before reading the fault memory, do not try to locate faults with engine running by disconnecting plugs etc. since this may be detected and stored as a fault in the fault memory.

Note for System Tester 9288
If the tester display shows **... not present**, this could mean

- Fault did not exist at time of testing

  In case of a loose contact, an additional + symbol is displayed.
  Example: **... not present +**
  Remedy: Visual inspection of path

  Conditions under which the fault is tested do not correspond to the conditions under which the fault occurred.
  Remedy: Conform with conditions displayed on the tester.

If the **Signal unplausible** message is displayed on the tester, this could mean

- The signal of the monitored component is not within the tolerance range.

Explanations for the counter shown on the tester display
When the fault is detected for the first time, the counter is always set to 50.
If a lower number is displayed, determine the difference between 50 and the value shown. This value represents the number determined from the combination of starting process, meeting the test conditions and non-presence of the fault. When the number 0 is reached, the fault path is deleted in the control unit.
Should the fault status change from not present to present at a number below 50, the counter is reset to 50. If a number above 50 is displayed, the difference indicates the number of loose contacts that have occurred. Even at a value above 50, the counter counts down to zero when the above combination of conditions is met.

Arrangement of components in the vehicle

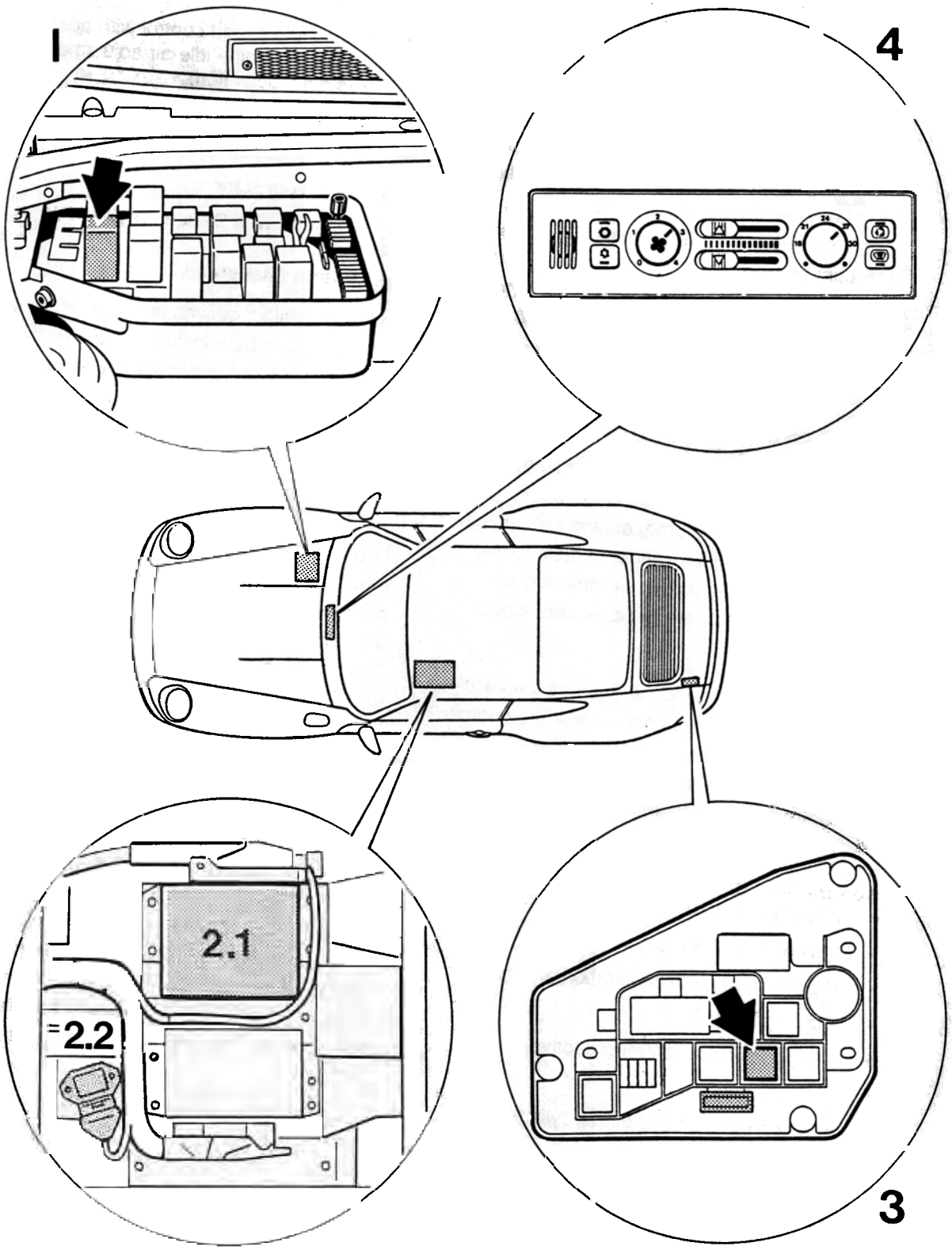

Function of components

1. DME relay

When the ignition is switched on, a positive voltage is supplied to pin 27 (term. 15) of the DME control unit across the airbag and alarm control unit.
At the same time, the DME relay terminal 85 is grounded via terminal 36 of the DME control unit. The relay closes and a further positive input signal is supplied to terminal 37 of the DME control unit.
Once the ignition has been switched off, the DME unit is shut down across terminal 36 with a delay of approx. 2-3 seconds to allow internal tests to be carried out in the control unit.

2.1 DME control unit

The engine functions are controlled by the DME control unit. Other measured input values, such as air volume, engine rpm, actual camshaft position (Hall sender in distributor), engine temperature, intake air temperature and throttle position, are used as data inputs for the control unit.

The main system actuators, such as the injection valves, the ignition final stages, the engine idle speed positioner, the tank vent and the resonance flap, are all controlled by the unit. The control unit is installed under the left hand seat in the car.

Connotation DME control unit:

- Injection (sequential)
- Ignition (twin ignition)
- Warming up and acceleration enrichment
- Start up control
- Oxygen sensor control (adaptive)
- Overrun shutoff
- Knock regulation (selective cylinder control, adaptive)
- Anti-bucking feature
- Torque reduction during Tiptronic gearshift accomplished by ignition retard

Engine idle speed adjustment for Tiptronic vehicles

Engine idle speed control with adaptive, automatic engine idle air adjustment (system modulation)

Carbon canister purge

Resonance flap control

55-pin connector

Diagnosis with System Tester 9288

2.2 Ignition final stage

A double final stage with two transistors supplies current to both ignition coils. The double final stage is fitted under the left hand seat, mounted on a bracket next to the DME control unit.

3. Relay for auxiliary air pump

The auxiliary air injection is controlled by the DME control unit that connects the appropriate relay on the relay board on the left hand side of the engine compartment to ground when the correct engine temperature is reached. The relay then closes and connects a solenoid valve and the secondary air pump to positive. Voltage is now supplied to the electric motor in the pump and the motor starts running.

4. Heating control unit

When the heating regulator is set to maximum heating or when a high heating output is required, a signal is sent from the heating control unit to terminal 41 of the DME control unit. When this signal is present, the "overrun shutoff" feature is no longer valid and, hence, cooling of the heat exchanger at low outside temperatures and longer thrust periods is avoided.

Arrangement of components on the engine

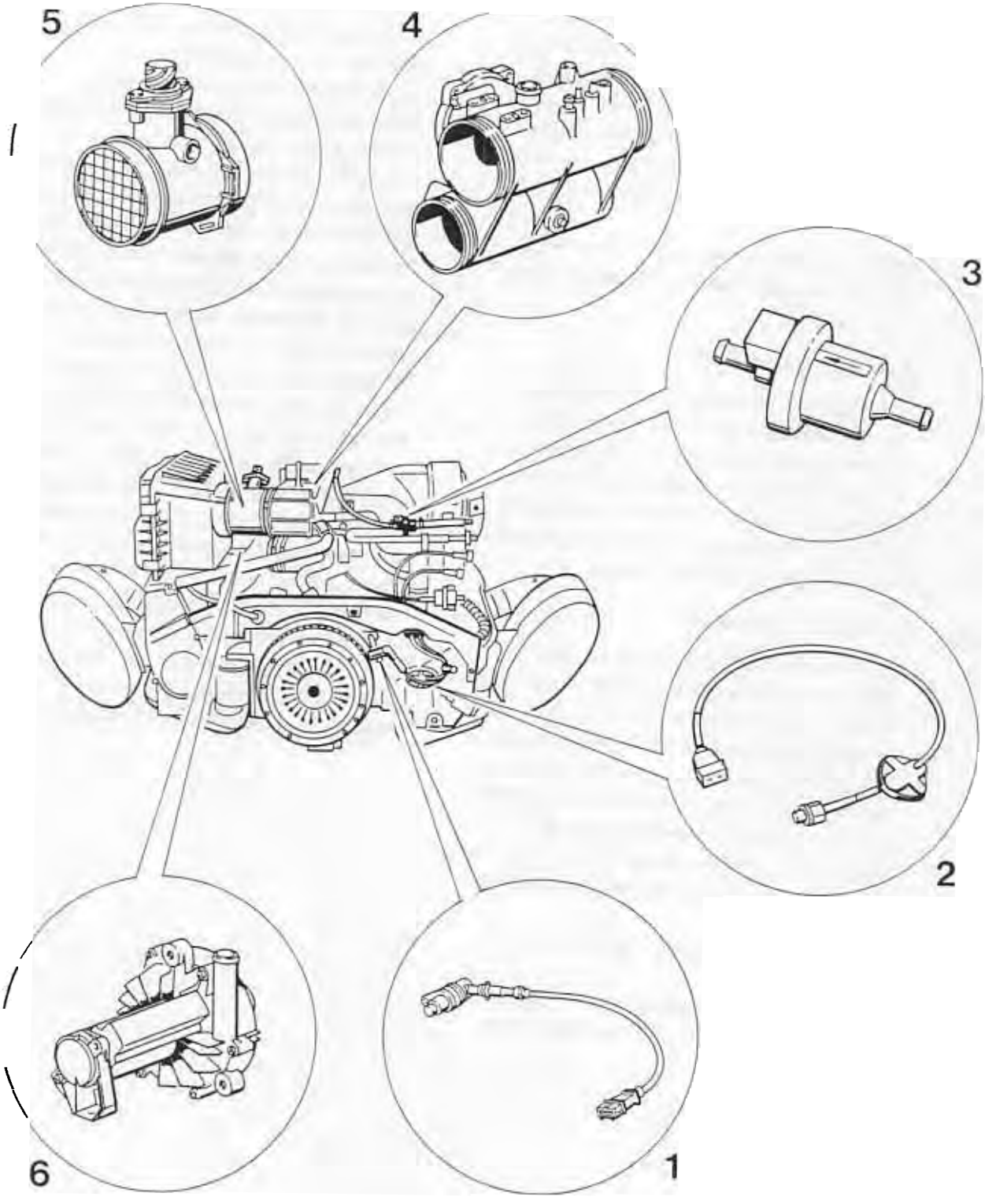

Function of components

1. Speed and reference mark sender

The DME is combined with an inductive sender for engine speed and reference mark detection. For this purpose, a toothed ring gear is machined onto the flywheel. This ring has a total of 60 teeth. Two of these teeth are replaced by cutouts to generate the reference mark signal. The reference signal is set at 84° BTDC.
The air gap between the sender and the flywheel ring gear is adjustable and must be 1.0 ± 0.2 mm.

2. Engine temperature

The engine temperature sensor is screwed into the cylinder head of the third cylinder. It has two electrical connections, i.e. corrosion on the temperature sensor threads has no detrimental effect on the resistance characteristics and, hence, on the mixture composition (potential temperature sensor).

3. Tank venting valve

A solenoid valve is installed in the line between the carbon canister and the air intake system. The direction of flow of the solenoid is indicated by an arrow on the plastic housing.
The valve is frequency-controlled by the map just above the area for engine idle and when the cylinder head temperature is > 95° C.
This ensures that the correct amount of purge air is mixed in accordance with the intake air volume.
In a no-voltage state the solenoid valve is closed.
The valve can be checked with the System Tester using the "drive link test" menu item.

4. Resonance flap

The DME control unit activates a vacuum-controlled diaphragm valve which either opens or closes the resonance flap.
The resonance flap is closed between 3,000 rpm and 5,500 rpm and at a throttle opening angle of > 60°.
Due to the ignition sequence, the intake system is alternatively supplied by both tanks.
Due to the firing order, air is drawn in an alternating manner from both intake system tanks.
If resonances occur, the intake frequency of one row of cylinders matches the natural frequency of the pressure vibrations in the respective tank. The natural frequency is determined by the geometry of the intake pipes, the resonance pipe and the tanks. A crucial factor, however, is the total length of the pipe from the actual intake cylinder to the next cylinder being supplied, the distribution into intake and the resonance pipe lengths as well as the depth of the tank in the direction of flow. In the no-current state, the resonance flap is open.
As soon as the ignition is switched on, however, it is triggered and closed. If the DME control unit detects that the engine is being started, the resonance flap is opened again.

5. Hot-film mass air flow sensor

Detection of the air drawn into the intake is performed by a hot-film mass air flow sensor.

The air mass is required for the following DME control unit functions:

- Injection
- Ignition
- Oxygen sensor control
- Venting of the carbon canister
- Knock regulation

Plausibility test

The electronic housing (the complete measuring element) and the measuring channel are fitted into the housing of the mass air flow sensor with two screws. An additional seal is used to seal the measuring element against the sensor housing.

On the inlet and outlet sides of the mass air flow sensor a protective screen is fitted to smooth out the turbulences in the air and therefore to ensure an even air flow around the hot film. Next to the connecting plug, an arrow is imprinted in the housing of the mass air flow sensor to indicate the direction of air flow.

Note

The measuring element in the mass air flow sensor housing must never be removed since the components are calibrated during manufacture of the unit.

6. Auxiliary air pump

In order to ensure faster heating up of the catalytic converters of vehicles supplied to the USA and Canada, and to improve emissions when starting the engine at temperatures between 15 °C and 70 °C (engine temperature), auxiliary air is injected downstream of the exhaust valve for 1 minute after starting. The auxiliary air injection is controlled by the DME control unit that connects the appropriate relay on the relay board on the left hand side of the engine compartment to ground when the correct engine temperature is reached. The relay then closes and connects a solenoid valve and the secondary air pump to positive. Voltage is now supplied to the electric motor in the pump and the motor starts running. The auxiliary air pump is installed underneath the hot film mass air flow sensor.

Arrangement of components on the engine

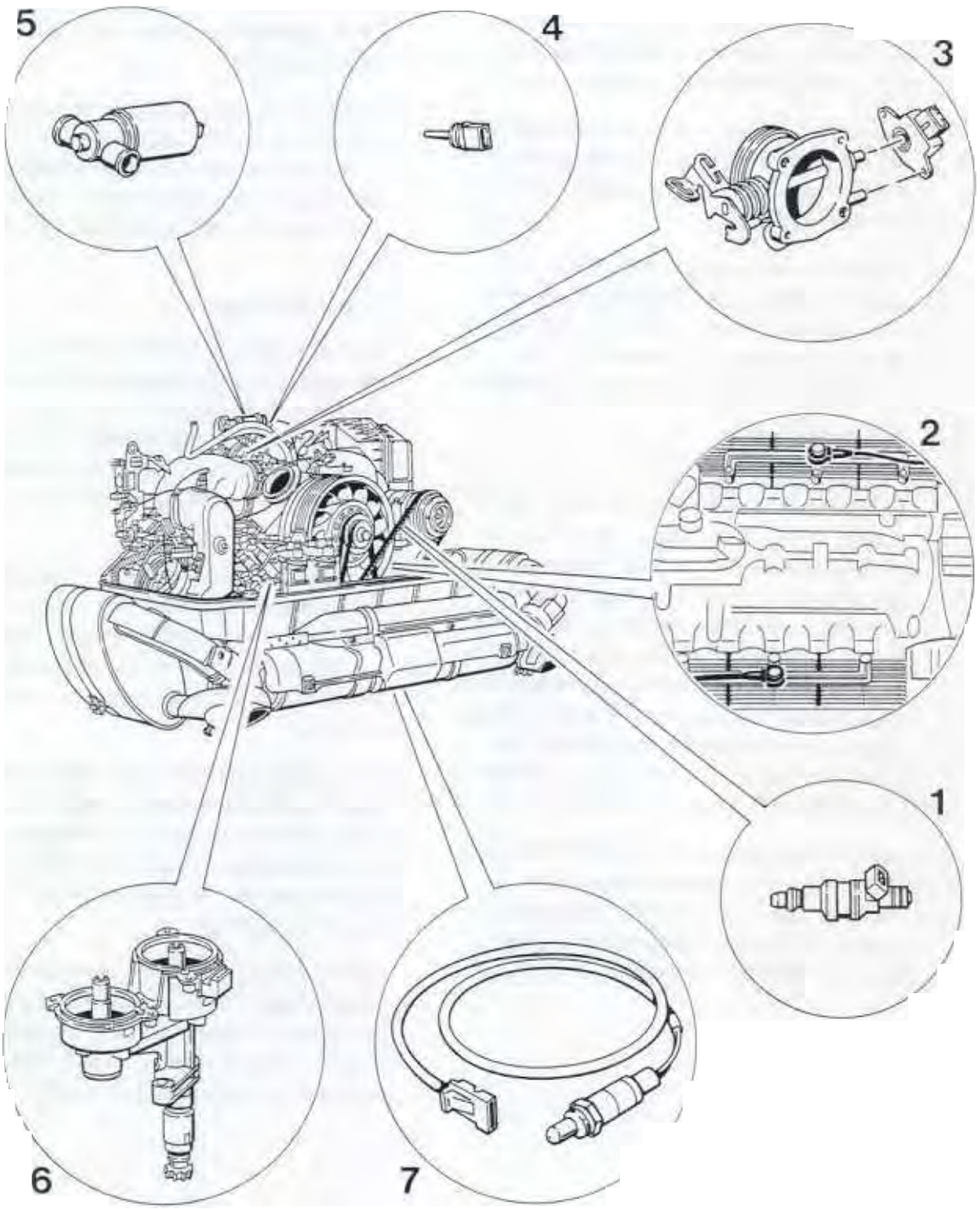

Function of components

1. Injection valves

The orifice cross-section of the injection valves is the same as on the 200 kW (272 HP) engine. The brass coil in the injection valve has a internal resistance of approx. 16Ω.

Due to the sequential fuel injection system, the electrical conneting wires must never be interchanged. The wires are therefore marked for easy identification.

Sequential fuel injection means that every cylinder is individually supplied with the entire calculated fuel quantity once per working cycle according to the ignition sequence. This produces a very homogeneous air-fuel mixture.

2. Knock sensors

The engine is equipped with two knock bridges with a knock sensor screwed into each of these knock bridges. The knock bridges connect the individual cylinders no. 1 to 3 and 4 to 6. The knock detection cirucit is matched to the bridges which is why no other components may be fitted to the bridges (interference). The correct tightening torque and the correct assembly sequence must be observed. Inadvertent mixup of the connectors of the knock sensors on the wire harness end cannot occur. The plug connector is of green color.

If a knocking combustion is detected, the ignition timing for the respective cylinder is retarded by 3°. If the knocking combustion continues, each knock detected retards the ignition in 3° stages up to a maximum of 9°.

If no knocking combustion is detected anymore, the ignition timing is advanced to the optimum value or the programmed ignition timing angle again in small steps according to the time elapsed.

To allow the sensor signals of both knock sensors to be correlated according to the firing order, a Hall sender is fitted into the double ignition distributor to enable the DME control unit to recognize the ignition point of cylinder no. 1.

Adaptive function

In order to perform adaptive knock regulation, the electronic ignition map is subdivided up into 8 engine speed and 4 load ranges. If a knock occurs, the ignition angle is retarded by 3° for the respective cylinder, and is then retuned to the optimized ignition angle in small steps dependent on time.

If, however, the corresponding load/engine speed range is exceeded (e.g. during acceleration) while ignition timing is retarded, the last ignition timing angle set (learnt) when the load/engine speed range was left is now adapted.

In the next load/engine speed range, the new (optimized) ignition angle stored in the control unit is immediately set. In this manner, longer and unnecessary retarding of the ignition is avoided and the dynamic behavior of the engine is improved.

If the engine now returns to the load/engine speed range with the adapted (learnt) ignition angle, the reduced value deviating from the optimum ignition angle is set first. This helps to reduce the total number of knocks.

3. Throttle potentiometer

A throttle potentiometer on the shaft is used to determine the angular position of the throttle shaft. The O position (engine idle position) of the potentiometer is determined in an adaptive process by the DME control unit.

If the battery has been disconnected or the control unit has been separated from the system, the engine must be restarted with the throttle fully closed.

A self-adaptive unit always selects the smallest opening angle of the throttle as the engine idle position. If the throttle moves to "open", the engine idle settings are switched off by the control unit as soon as an opening angle of 1° is reached. When a throttle opening angle of approx. 66° is reached, the control unit actuates the full-load feature.

Using the "Actual values" menu on the system tester, the current opening angle of the throttle can be read off in degrees. In this manner the accelerator cable setting can be checked. When the throttle is in the zero position, the throttle angle display must be 0°. With the accelerator pedal fully depressed, i.e. with the throttle fully open, the throttle angle display must read 84° ± 3° .

4. Intake temperature

To reduce the knock tendency of the engine at high intake temperatures, the 911 Carrera is fitted with a temperature sensor (NTC) in the rubber shroud between the mass air flow sensor and the throttle body. The signal of this sensor is processed by the DME control unit.

Modification of the timing angle towards "retarding" the timing angle is a continuous process and starts at an intake temperature of 25 °C.

The current value transmitted by the temperature sensor may be retrieved in degrees Centigrade with System Tester 9288 in the "Actual values" menu item.

5. Idle speed positioner

The positioner is supplied with two clocked electrical input signals from the DME control unit, one for the opening coil and the other for the closing coil. This creates opposed torsional forces on the armature. Due to the inertia of the armature, the positioner adjusts itself to a particular angle that corresponds to the pulse/duty factor of the signal received.

By modifying the input signals, e.g. when the engine speed changes, the pulse/duty factor of the signal supplied to the positioner changes as well. The programmed nominal rpm is compared with the actual rev. speed in the control unit. The air flow is then modified by the positioner until the nominal rpm and the actual rpm are identical.

6. Double distributor with Hall sender

The 911 Carrera engine is fitted with a twin ignition system, i.e. there are two spark plugs per combustion chamber to ignite the air-fuel mixture. This shortens the spark travel in the cylinder and reduces combustion time while producing a faster pressure increase. In addition, a more stable combustion is achieved thanks to the second spark source, i.e. the differences between one working stroke and another are reduced.

In summary, twin ignition offers the following advantages:

Higher power output

Lower fuel consumption

Improved engine idle

Improved throttle response with a cold engine with less enrichment requirements

Reduced emissions

Hall sender

Hall sender

The twin ignition distributor includes a Hall sender that is required to acknowledge the firing TDC position of cylinder no. 1. The Hall signal is required by the DME control unit to correlate the knock sensor signals or to control the sequential fuel injection.

7. Oxygen sensor

The 911 Carrera is fitted with the plunge-proof oxygen sensor LSH 25. The oxygen sensor is potential-free and is therefore fitted with a new 4-pin plug connector with separately insulated wires.

The oxygen sensor is heated by the DME control unit. Positive supply to the oxygen sensor occurs across the fuel pump relay inside the DME relay (as soon as the engine is started). The ground connection is made via the DME control unit. If the engine has already reached the operating temperature and is then driven at heavy loads and high engine speed, no additional heating of the oxygen sensor is required. In this operating state, the DME therefore cuts off the supplementary sensor heating.

The oxygen sensor is monitored by the DME control unit. The sensor voltage may additionally be read off using the System Tester and the "Actual values" menu item. If problems occur at the oxygen sensor, start troubleshooting by checking operation of the sensor heater. A voltage of approx. 12 V should be present at the sensor plug when the engine is at idle.

Fault memory

Possible fault texts

```
Power supply
too high

XXXXXXXXXXXXXXXXXXXXXXX
```

```
Power supply
too low

XXXXXXXXXXXXXXXXXXXXXXX
```

```
ECTS 2

Short to ground
XXXXXXXXXXXXXXXXXXXXXXX
```

```
ECTS 2

Opn. circ./short to +
Signal unplausible
XXXXXXXXXXXXXXXXXXXXXXX
```

```
Throttle
potentiometer
Signal unplausible
XXXXXXXXXXXXXXXXXXXXXXX
```

```
Throttle
potentiometer
Short to ground
XXXXXXXXXXXXXXXXXXXXXXX
```

```
Speed signal
Engine
Signal unplausible
XXXXXXXXXXXXXXXXXXXXXXX
```

```
Speed signal
mph
Signal unplausible
XXXXXXXXXXXXXXXXXXXXXXX
```

```
Hot film MAF

Short to +
XXXXXXXXXXXXXXXXXXXXXXX
```

```
Hot film MAF

Opn. circ./sh. to gr.
XXXXXXXXXXXXXXXXXXXXXXX
```

```
HO2S
Signal unplausible

XXXXXXXXXXXXXXXXXXXXXXX
```

```
Closed loop sensor

lean
XXXXXXXXXXXXXXXXXXXXXXX
```

```
Closed loop sensor

rich
XXXXXXXXXXXXXXXXXXXXXXX
```

Fault memory

Possible fault texts

```
HO2S
Short to ground

XXXXXXXXXXXXXXXXXXXXXXXX
```

```
HO2S
Short to +

XXXXXXXXXXXXXXXXXXXXXXXX
```

```
HO2S
Open circuit

XXXXXXXXXXXXXXXXXXXXXXXX
```

```
Intake air temp.
sensor
Short to ground
XXXXXXXXXXXXXXXXXXXXXXXX
```

```
Intake air temp.
sensor
Opn. circ./short to +
XXXXXXXXXXXXXXXXXXXXXXXX
```

```
Change of ign. timing
Short to ground

XXXXXXXXXXXXXXXXXXXXXXXX
```

```
IACV
opening winding
Short to +
XXXXXXXXXXXXXXXXXXXXXXXX
```

```
IACV
opening winding
Opn. circ./sh. to gr.
XXXXXXXXXXXXXXXXXXXXXXXX
```

```
IACV
closing winding
short to +
XXXXXXXXXXXXXXXXXXXXXXXX
```

```
IACV
closing winding
opn. circ./sh. to gr.
XXXXXXXXXXXXXXXXXXXXXXXX
```

```
Knock sensor 1
Signal unplausible

XXXXXXXXXXXXXXXXXXXXXXXX
```

```
Knock sensor 2
Signal unplausible

XXXXXXXXXXXXXXXXXXXXXXXX
```

```
Control unit faulty
```

Fault memory

Possible fault texts

```
Hall signal
opn. circ./short to +

XXXXXXXXXXXXXXXXXXXXXXXX
```

```
Hall signal
short to ground

XXXXXXXXXXXXXXXXXXXXXXXX
```

```
Idle
CO potentiometer
short to ground
XXXXXXXXXXXXXXXXXXXXXXXX
```

```
Idle
CO potentiometer
opn. circ./short to +
XXXXXXXXXXXXXXXXXXXXXXXX
```

```
Control unit
faulty

XXXXXXXXXXXXXXXXXXXXXXXX
```

```
Fuel pump relay

short to +
XXXXXXXXXXXXXXXXXXXXXXXX
```

```
EVAP valve
short to +

XXXXXXXXXXXXXXXXXXXXXXXX
```

```
EVAP valve
opn. circ./sh. to gr.

XXXXXXXXXXXXXXXXXXXXXXXX
```

```
Warning light
Check Engine
short to +
XXXXXXXXXXXXXXXXXXXXXXXX
```

```
Injector valve
cylinder 1
short to +
XXXXXXXXXXXXXXXXXXXXXXXX
```

```
Injector valve
cylinder 1
opn. circ./sh. to gr.
XXXXXXXXXXXXXXXXXXXXXXXX
```

```
Injector valve
cylinder 6
short to +
XXXXXXXXXXXXXXXXXXXXXXXX
```

```
Injector valve
cylinder 6
opn. circ./sh. to gr.
XXXXXXXXXXXXXXXXXXXXXXXX
```

```
Injector valve
cylinder 2
short to +
XXXXXXXXXXXXXXXXXXXXXXXX
```

Fault memory

Possible fault texts

```
Injector valve
cylinder 2
opn. circ./sh. to gr.
XXXXXXXXXXXXXXXXXX
```

```
Injector valve
cylinder 4
short to +
XXXXXXXXXXXXXXXXXX
```

```
Injector valve
cylinder 4
opn. circ./sh. to gr.
XXXXXXXXXXXXXXXXXX
```

```
Injector valve
cylinder 3
short to +
XXXXXXXXXXXXXXXXXX
```

```
Injector valve
cylinder 3
opn. circ./sh. to gr.
XXXXXXXXXXXXXXXXXX
```

```
Injector valve
cylinder 5
short to +
XXXXXXXXXXXXXXXXXX
```

```
Injector valve
cylinder 5
opn. circ./sh. to gr.
XXXXXXXXXXXXXXXXXX
```

```
Final stages
group 1
Signal unplausible
XXXXXXXXXXXXXXXXXXX
```

```
Final stages
group 2
Signal unplausible
XXXXXXXXXXXXXXXXXXX
```

```
Final stages
group 3
Signal unplausible
XXXXXXXXXXXXXXXXXXX
```

```
AIR pump
relay
short to +
XXXXXXXXXXXXXXXXXX
```

Drive links

```
Drive links
1 = Inj. valve cyl. 1
2 = Inj. valve cyl. 2
3 = Inj. valve cyl. 3 >
```

```
< Drive links
1 = Inj. valve cyl. 4
2 = Inj. valve cyl. 5
3 = Inj. valve cyl. 6 >
```

```
< Drive links
1 = IACV
2 = EVAP
2 = Resonance flap
```

Actuators active

ROW coding

```
Actuator active
1 = Ign. circ. 1 off
2 = Ign. circ. 2 off
3 = Inj. off
```

USA coding

```
Actuator active
1 = Ign. circ. 1 off
2 = Ign. circ. 2 off
3 = Inj. off   >
```

```
< Actuator active
1 = AIR pump
```

Target values

```
Actual values
1 = Voltage
2 = ECTS
3 = IATS   >
```

```
< Actual values
1 = Version coding
2 = Rpm
3 = Ignition timing   >
```

```
< Actual values
1 = HO2S voltage
2 = Load signal
3 = IACV   >
```

```
< Actual values
1 = Air flow sensor
2 = Speed
3 = Throttle plate   >
```

```
< Actual values
1 = Injection time
2 = Reference data
```

Input signals

```
Input signals
1 = Idle detection
2 = Full load detection
3 = ACS switch   >
```

```
< Input signals
1 = Signal heating
2 = Reference mark
3 = TR            >
```

```
< Input signals
1 = Ign. timing change
```

Test point	Fault code	Display (fault text)	Page
		Power supply	24 - 31
2	14	Engine temperature sensor 2	24 - 32
3	15/16	Throttle potentiometer	24 - 33
4	18	Rpm signal	24 - 33
5	19	Speed signal <- Speedometer	24 - 35
6	21	Hot-wire mass air flow sensor	24 - 36
7	22	Oxygen sensor	24 - 37
8	23	Oxygen regulation / stop	24 - 39
	24	Oxygen sensor / short to + / short to ground	24 - 39
9	25	Intake air temperature sensor	24 - 39
10	26	Ignition timing change	24 - 40
11 - 12	27/28	IACV opening winding / IACV closing winding	24 - 40
13	31	Knock sensor 1	24 - 42
14	32	Knock sensor 2	24 - 42
15	33	Control unit faulty	24 - 43
16	34	Hall signal	24 - 43
17	36	Idle CO potentiometer	24 - 43
18	41	Control unit faulty	24 - 43
19	42	Fuel pump relay (DME relay)	24 - 44
20	43	Tank ventilation valve	24 - 44
21	45	Warning lamp Check Engine	24 - 45
22 - 27	51 - 56	Injector valves	24 - 46
28	67 - 69	Ignition final stages	24 - 47
29	44	Auxiliary air pump relay	24 - 51
30		Checking fuel pressure	24 - 53
		Check intake system for freedom from leaks	24 - 54
		Check-Engine lamp	24 - 55

Control unit - terminal configuration

55 Diagnosis K wire
54 Characteristic map switch
53 Throttle potentiometer
52 Throttle position to transmission control unit
51 Transmission input
50 Knocking yes/no
49 Speed/reference mark sender +
48 Speed/reference mark sender –
47 Intake air temperature
46 not used
45 ECTS II
44 Tiptronic coding
43 not used
42 Selector lever switch
41 Heating control unit
40 AC compressor coupling
39 not used
38 not used
37 DME relay 87
36 Ground, DME relay 85
35 Injector valve cylinder 2
34 Injector valve cylinder 4
33 Tank vent
32 Auxiliary air pump (USA)
31 Final stage ignition circuit 2
30 Ground, knock sensors
29 Knock sensor 2
28 Oxygen sensor / CO potentiometer

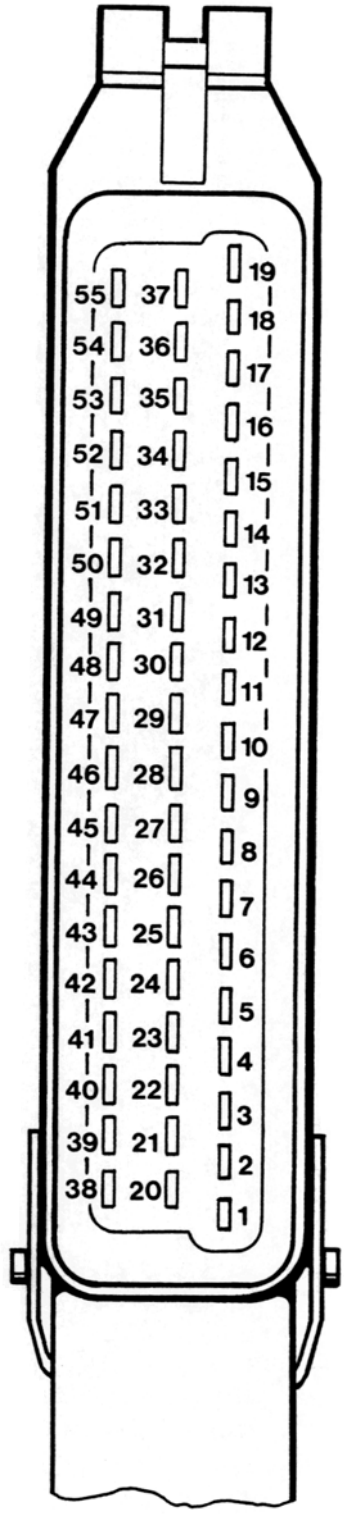

27 Terminal 15
26 Ground, mass air flow sensor
25 Final stage ignition circuit 1
24 Ground, remaining final stages
23 Injector valve cylinder 5
22 Intake manifold flap closed
21 Check Engine monitor (USA)
20 Oxygen sensor heating
19 Ground, electronics, all shields
18 Battery +
17 Injector valve cylinder 1
16 Injector valve cylinder 6
15 not used
14 Ground, throttle potentiometer / NTCs
13 Diagnosis L wire
12 Positive supply throttle potentiometer /Hall sender
11 Knock sensor 1
10 Ground, oxygen sensor
9 Vehicle speed
8 Hall sender signal
7 Mass air flow sensor signal
6 Rev. counter
5 Injector valve cylinder 3
4 Intake manifold flap open
3 Ground, DME relay 85 b
2 not used
1 Resonance flap

Engine in perfect running condition Battery charged Starter motor cranks the engine **Terms in bold letters =** Display Fault Memory / Fault Path	Supply voltage	Engine temperature sensor 2	Throttle potentiometer	Rpm signal	Speed signal <- Speedometer	Hot Film Mass Air flow sensor	Oxygen sensor (Signal)	Oxygen regulation/Oxygen sensor	Intake Temperature Sensor	Ignition timing change	Opening winding of idle stabilizer	Closing winding of idle stabilizer	Knock sensor 1
Plug, control Unit	24 → 18 24 → 27	45 → 14		49 → 48		7 → 26							
Test equipment	V	Ω	V	≡	≡	V		V	Ω		V≡	V≡	
Fault Code 1		14	15	18	19	21	22	23 24	25	26	27	28	31
Test point	1	2	3	4	5	6	7	8	9	10	11	12	13
Engine will not start	x	x		x									
Engine hard to start		x		x		x					x	x	
Erratic idling		x	x			x					x	x	
Poor pick-up		x	x	x		x	x	x	x				x
Misfiring	x			x		x							
High fuel consumption		x	x			x	x	x					x
Poor energie power		x		x		x	x	x	x				x
Engine hesitation	x	x		x		x	x	x					
Poor hot starting											x	x	
Diagnosis not practicable	x												

	x						x	x		12	**Closing winding of idle stabilizer**	28	V≅	
			x	x		x				13	**Knock sensor 1**	31		
			x	x		x				14	**Knock sensor 2**	32		
			x	x		x				15	**Control unit faulty**	33		
			x	x		x				16	**Hall signal**	34	≅	
										17	**Idle CO potentiometer**	36		
x								x	x	18	**Control unit faulty**	41		
									x	19	**Fuel pump relay (DME-relay)**	42	V	36-24
	x	x				x	x	x		20	**Tank ventilation relay**	43	V ≅	
										21	**Check Engine warning lamp**	45		
	x	x		x	x	x	x	x		22	**Injection valve cylinder 1**	51	V Ω	≅
	x	x		x	x	x	x	x		23	**Injection valve cylinder 6**	52	V Ω	≅
	x	x		x	x	x	x	x		24	**Injection valve cylinder 2**	53	V Ω	
	x	x		x	x	x	x	x		25	**Injection valve cylinder 4**	54	V Ω	≅
	x	x		x	x	x	x	x		26	**Injection valve cylinder 3**	55	V Ω	≅
	x	x		x	x	x	x	x		27	**Injection valve cylinder 5**	56	V Ω	
		x	x		x		x	x	x	28	**Ground and plug connections**	67 69		
										29	Air Pump	44	V	
										30	Fuel pressure			
x										31	Leads K + L see Self-diagnosis, page 03-3	V ≅		

V = Voltmeter Ω = Ohmmeter ≅ = Oscilloscope

Fault, Fault Code	Possible Causes, Elimination, Remarks

Test Point 1a

Power supply for DME controll unit (V)

a) Permanent positive (term. 30) If there is no B+ at term. 30 the fault memory is cleared

Test procedure:

Connect a voltmeter to terminal 24 (-) and terminal 18 (+) of the control unit plug with the help of test leads.

Display: Battery voltage

No display: Check current flow and ground paths in accordance with wiring diagram.

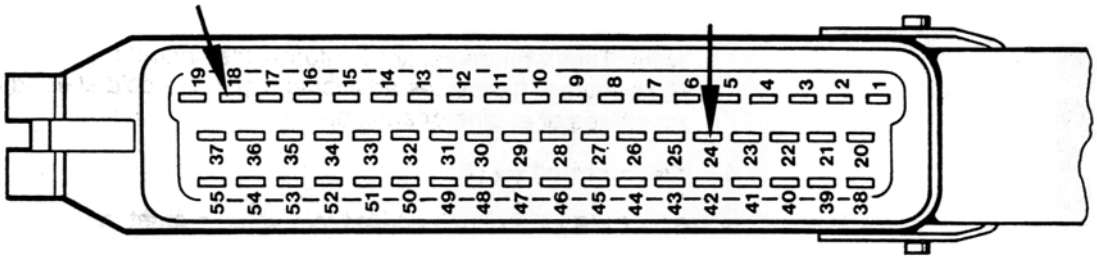

Test point 1b

Power supply of DME control unit (V) too high/too low

Fault code 1_11

b) Power supply via terminal 15

Connect a voltmeter to terminal 24 (-) and terminal 27 (+) of the control unit plug with the help of test leads. Turn on ignition.

Display: Battery voltage

No display: Check current flow according to wiring diagram

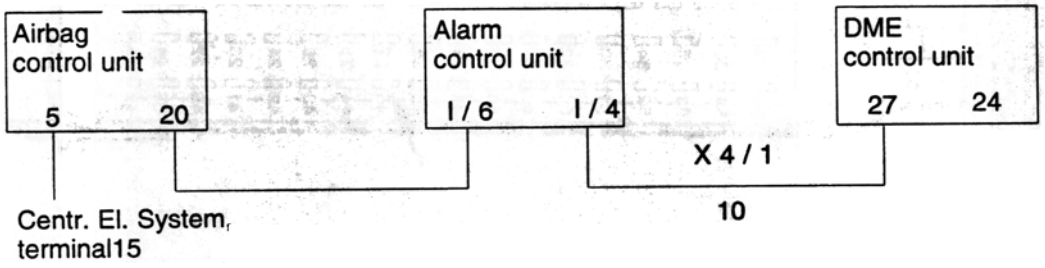

Fault, Fault Code	Possible Causes, Elimination, Remarks

Test point 2

Engine temp. sensor (ECTS II/Ω)

Fault code 1_14

Using System Tester 9288, the engine temperature can be read off directly under menu item "Actual values".

If no plausible display:

Connect ohmmeter to terminal 45 and terminal 14 of the disconnected DME control unit plug with the help of test leads.

Display at:			
	0 °C	=	4.4 - 6.8 kΩ
	15 - 30 °C	=	1.4 - 3.6 kΩ
	40 °C	=	1 - 1.3 kΩ
	80 °C	=	250 - 390 Ω
	100 °C	=	160 - 210 Ω

If the above values ar not obtained, check directly at engine temperature sensor.

Note: Temperature sensor 2 informs the control unit of the engine temperature. It provides additional fuel in the cold starting and warm-up stages of engine operation.

Open circuit (∞ Ω):

The DME control unit adjusts to a value pre-set in the control unit that approximately corresponds to that of the engine at operating temperature. When the engine is warm, enrichment by the faulty temperature sensor 2 does not occur (emergency running program). This results in starting problems when the engine is cold (no cold start enrichment).

Short circuit to ground:

When engine is cold: No engine pickup, too lean, engine stops. No effect if engine is at operating temperature.

Replacement value is applicable to both types of fault!

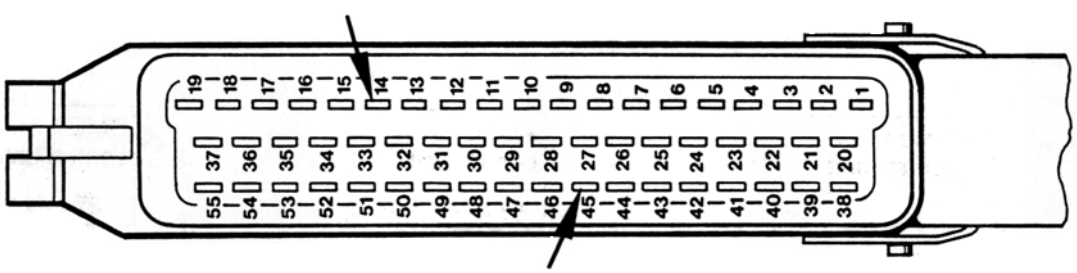

Fault, Fault Code	Possible Causes, Elimination, Remarks

Test point 3

Throttle potentiometer

Fault code 1_15
1_16

Using System Tester 9288, the throttle angle may be read directly in the **Actual values** menu item.
If no pausible display is obtained, check power supply.
Connect test lead VW 1501 between throttle potentiometer and disconnected plug.
Connect voltmeter between lead No. 1 and No. 2.
Ignition on = display: approx. 5 V (Power supply of throttle potentiometer)
No display: Check according to wiring diagram
Display approx. 0.5 Volt.
Connect voltmeter to lead No. 2 and No. 3.
Operate throttle. Voltage should now increase to approx. 4.3 Volt.

Test point 4

Rpm signal

Fault code 1_18

Run test using an oscilloscope. Connect and adjust shop oscilloscope according to manufacturer's instructions.

Connect oscilloscope test lead with terminal 49 and terminal 48 of the disconnected DME control unit plug.

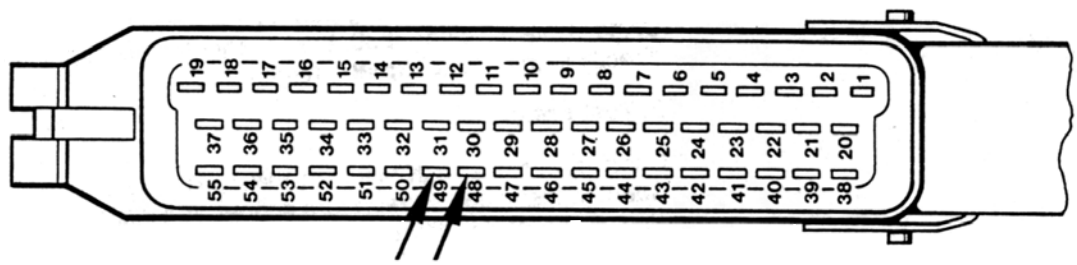

Fault, Fault Code	Possible Causes, Elimination, Remarks

Start engine. Sinewave fluctuations of 3 V min. must now be displayed. An intermittently higher amplitude indicates the reference mark signal.

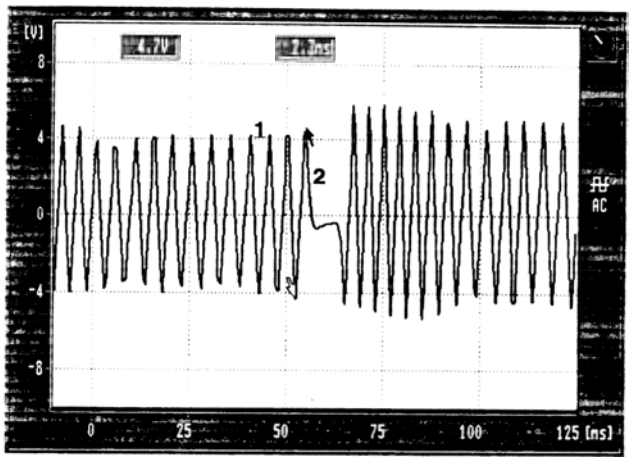

1 – Rpm signal
2 – Reference mark signal

If the voltage signal is too low (< 3V), the gap between sensor and ring gear may be adjusted incorrectly.

Sensor gap: Between ring gear and sensor 1.0 ± 0.2 mm.
Using System Tester 9288, the reference mark signal may be read directly in the **Input signals** menu item.

2. Test option

Check rpm signal with test lead VW 1501.
Connect test lead between rpm sender and disconnected control unit plug. Connect oscilloscope to test lead.
On vehicles with immobilizer, pull start relay (R 61) off the central electrical system and bridge plug-in contacts 30 and 87 (identifications 3 and 5 on central electrical system) with fuse-protected shop-made cable.

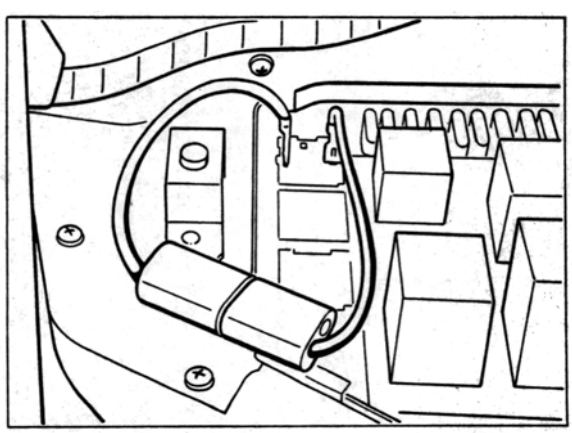

Fault, Fault Code	Possible Causes, Elimination, Remarks

Start engine

Sinewave fluctuations of 3 V min. must now be displayed. An intermittently higher amplitude indicates the reference mark signal.

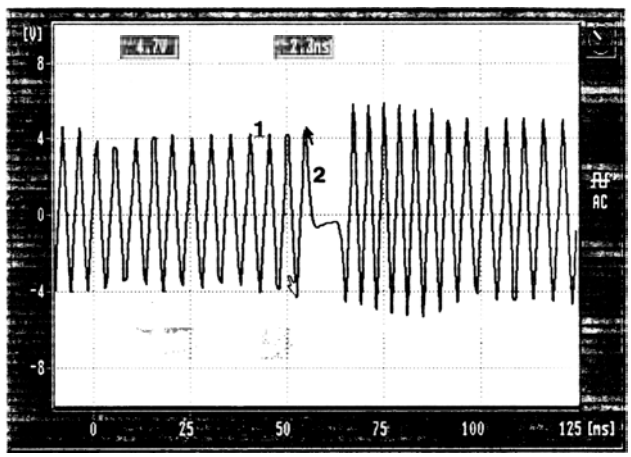

Test point 5

Speed signal/
Speedometer
Fault code 1_ 19

Using System Tester 9288, the speed signal may be read directly in the **Actual values menu item**. As an alternative, check with an oscilloscope.
To do so, connect oscilloscope to terminal 9 and terminal 24 of the control unit plug. Turn left front wheel manually.
The following signal must now be displayed.

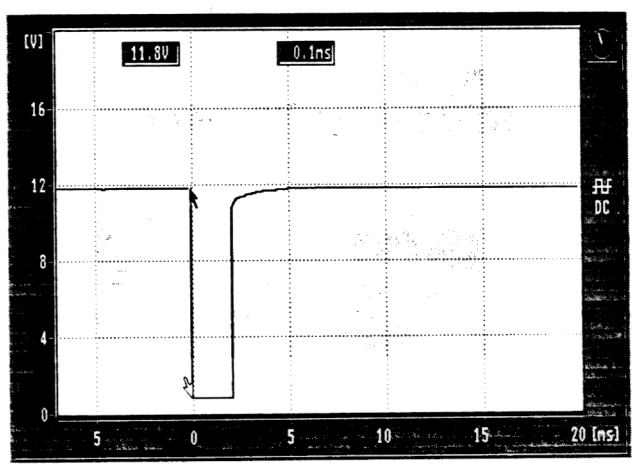

Fault, Fault Code	Possible Causes, Elimination, Remarks

Test point 6

Hot wire mass air flow sensor (V/Ω)
Fault code 1_21

Voltage supply (V)

Turn plug at hot wire mass air flow sensor anti-clockwise and disconnect. Connect voltmeter to terminals 1 and 3.



Bridge DME relay

Pull DME relay (R 53) off the central electrical system and bridge plug-in contacts 30 and 87 b (identifications 3 and 7 on central electrical system) with fuse-protected shop-made cable. The fuel pump should now start operating.

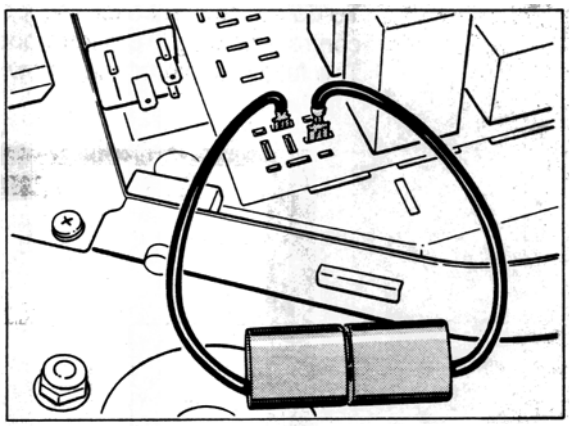

Ignition on:
Display: Voltage approx. 10.8 Volt

No display: check in accordance with wiring diagramm

Reconnect plug.

Fault, Fault Code	Possible Causes, Elimination, Remarks

Checking the hot wire signal with System Tester 9288

The mass air flow sensor signal may be tested directly in the **Actual values** menu item using System Tester 9288.

To check the signal, remove upper air cleaner section and start engine.

Display: approx. 1.0 Volt

Blow against hot wire.
This must cause the System Tester display to change.

Checking the hot wire signal (V)

Connect plug to mass air flow sensor.
Pull off DME plug.
Bridge DME relay.
Connect DME plug terminal 36 to ground (e.g. door stop).
Connect voltmeter to DME plug terminal 7 and 26 (ground).

Display: 160 mV

Blow against hot wire in mass air flow sensor and observe voltmeter.
A **voltage change** must occur.

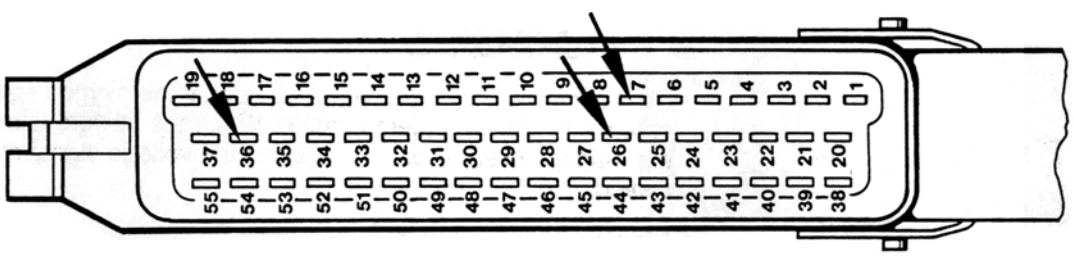

Test point 7

Oxygen sensor (V)
(Sensor signal)
Fault code 1 - 22

Checking the sensor signal

Using the System Tester 9288, the oxygen sensor signal may be read directly under the **Actual values** menu item.
Diagnosis can only be carried out if an engine temperatur of 70 °C has been reached for more than 1 minute.

Fault, Fault Code	Possible Causes, Elimination, Remarks

If not:

Disconnect oxygen sensor plug.

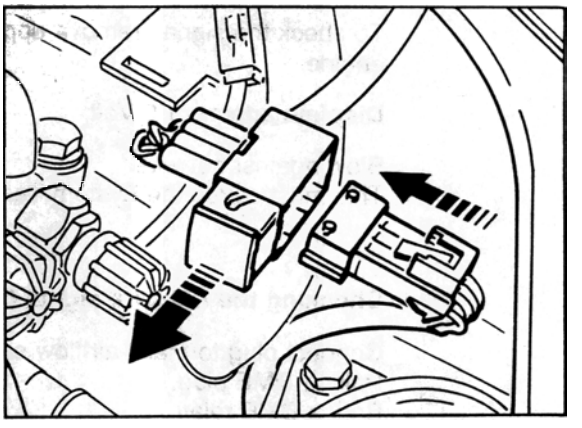

Connect digital voltmeter with terminals 3 and 4 at the sensor end.

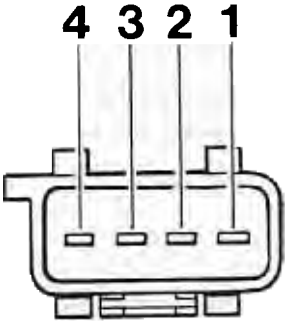

Start engine and allow to warm up so that the oxygen sensor reaches its operating temperature. When the mixture is enriched, e.g. during acceleration, a change in the voltage signal must be displayed.

Display: approx. 150 mV - 900 mV (acc. to mixture composition)

Oxygen sensor heating test

In case of delayed regulation response, check the oxygen sensor heating. To do so, connect voltmeter to terminals 1 (+) and 2 of the disconnected sensor plug on the control unit end with the engine running. On-board voltage must be present.

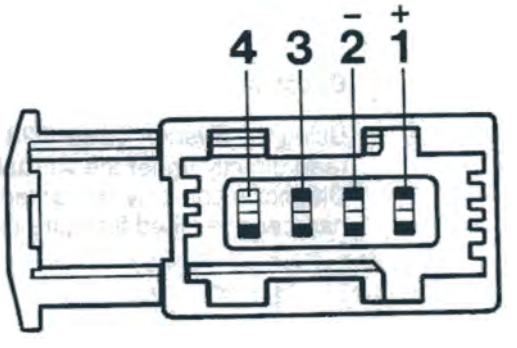

Fault, Fault Code	Possible Causes, Elimination, Remarks

Test point 8

Oxygen regulation stop
Fault code 1_23

The oxygen regulator cannot operate within its control range if extreme problems of mixture preparation occur, e.g. due to an excessively lean setting because of unmetered air, or due to an excessively rich setting because of a faulty injector valve. The oxygen regulator then moves up to the stop position.

Oxygen regulation **too rich**:
- Check intake system for leaks

Oxygen regulation **too lean**:
- Check fuel pressure
- Check injector valves for leaks

Oxygen sensor
Short to +/short to ground
Fault code 1_24

If the control unit detects an oxygen sensor voltage signal of more than 1.4 V or less than 0.1 V, the control unit switches to operation without oxygen sensor. (Short to ground or open circuit).

If regulation does not work and the sensor voltage is O.K., use System Tester 9288 to check the coding of the control unit before replacing it.

Test point 9

Intake air temperature sensor
Fault code 1_25

Using the System Tester 9288, the intake air temperature may be read directly under the **Actual values** menu item.

If no display or unplausible value:

Connect terminals 47 and 14 of disconnected DME control unit plug to ohmmeter.

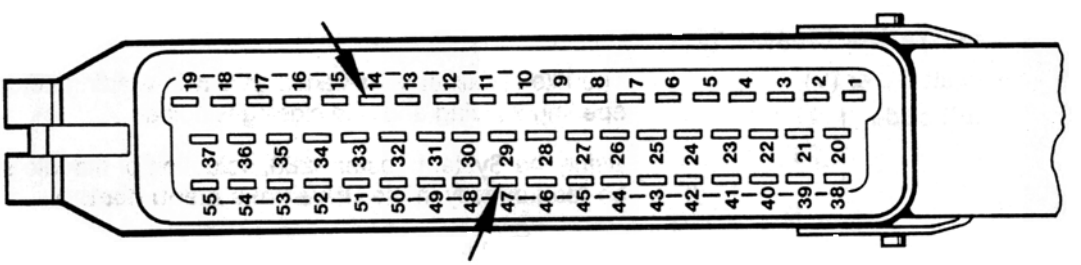

Display at:		
	0 °C =	4.4 - 6.8 kΩ
	15 - 30 °C =	1.4 - 3.6 kΩ
	40 °C =	1 - 1.3 kΩ

Fault, Fault Code	Possible Causes, Elimination, Remarks

Test point 10

Ignition timing change
Fault code 1 – 26

Using the System Tester 9288, the ignition timing change signal may be read directly in the **Input signals** menu item.

On Tiptronic vehicles, ignition is retarded when a gear change is made.

When the ignition timing change fault message occurs, check wiring continuity between DME plug and Tiptronic connector.

DME control unit plug: terminal 51

Tiptronic control unit plug: terminal 32

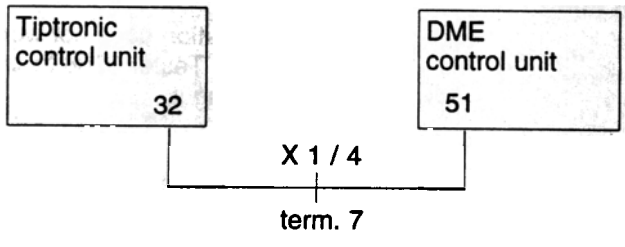

Caution, observe connection between plugs!

This fault causes the Tiptronic to operate in emergency mode. For the test to be valid, a test drive is required since the signal is only displayed for a very short time.

Test point 11 and 12

Idle stabilizer (V)
Fault code 1_27
1_28

The idle stabilizer is designed as a twin-winding actuator with one opening winding and one closing winding.

Using the System Tester 9288, actuation of the idle stabilizer may be read directly in the **Drive links menu item.**

If no audible pulse is present, check the following:

Voltage supply

Connect voltmeter with disconnected plug of idle stabilizer terminal 2 and engine ground. Ignition on.

Display: Battery voltage

Fault, Fault Code	Possible Causes, Elimination, Remarks

Configuration of terminals

Terminal 1	Closing winding signal
Terminal 2	Battery voltage
Terminal 3	Opening winding signal

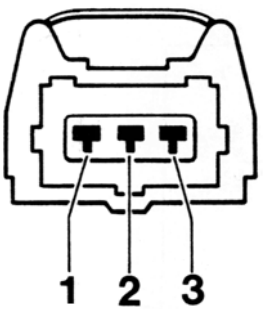

No display:

Check power supply in accordance with wiring diagram.

Check the control signal

Using the System Tester 9288, the idle stabilizer signal may be read directly in the **Actual values** menu item.

Operational check: Switch on loads in idle mode.
% display must change, idle speed remains constant.

If not:

Connect 3-pin adapter lead VW 1501 between idle stabilizer and plug port.

Connect oscilloscope to the adapter lead terminal 1 (closing winding) as well as terminal 3 (opening winding).

Make sure the wiring connectors are not shorted to vehicle ground – **to avoid short circuits.**

Fault, Fault Code	Possible Causes, Elimination, Remarks

With the engine running, the following display must appear:

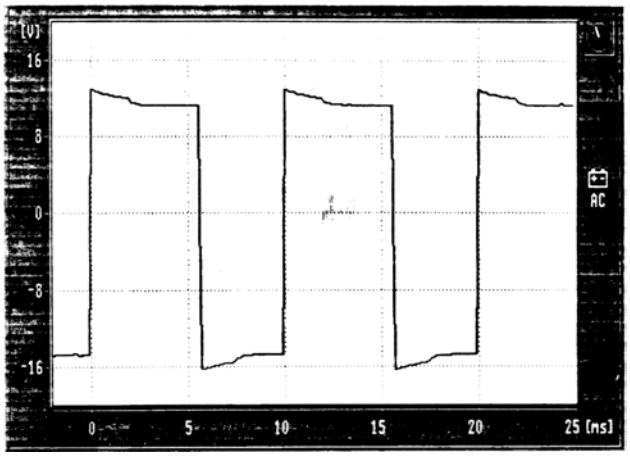

1. Signal (terminal 1, opening closing signal)
2. Signal (terminal 3, opening winding signal)

If no audible pulse is detected even though voltage is present and a signal is applied, replace the idle stabilizer.

Test point 13

Knock sensor 1

Fault code 1_31

Mounting of knock sensor (observe torque and type of screw).

Check wiring harness and plug connection in accordance with wiring diagramm.

Reconnecting the plugs helps to eliminate contact resistances.

Replace knock sensor.

If the knock sensor is faulty, ignition timing is retarded by 6° on the crankshaft at a certain engine load.

Test point 14

Knock sensor II

Fault code 1_32

Mounting of knock sensor (observe torque and type of screw).

Check wiring harness and plug connection in accordance with wiring diagramm.

Reconnecting the plugs helps to eliminate contact resistances.

Replace knock sensor.

If the knock sensor is faulty, ignition timing is retarded by 6° on the crankshaft.

Fault, Fault Code	Possible Causes, Elimination, Remarks

Test point 15

Control unit faulty
(Knock computer)
Fault code 1_33

Ignition timing is retarded by 6° on the crankshaft for all cylinders from a certain engine load if this fault occurs.

Replace control unit.

Test point 16

Hall signal
Fault code 1_34

The hall sender is connected to the control unit for voltage supply (approx. 5 V) and ground connection.

The signal is fed to the control unit via the 0 line.

In case of error display: Check voltage supply, ground connection and signal line in accordance with the wiring diagram.

Hall sender plug terminals		Control unit plug terminals
	→	19
2	→	8
3	→	12

Test point 17

Idle CO
potentiometer
Fault code 1_36

On vehicles without catalytic converter that show fault code 36, start by testing the control unit coding with System Tester 9288, **Actual values menu item.**

If the coding is O.K., check power supply for CO potentiometer and potentiometer signal in accordance with the wiring diagram.

Test point 18

Control unit faulty

Fault code 1_41

If this fault is detected by the control unit, maximum engine speed is limited to 6,000 rpm 6 minutes after starting the engine. This is done to protect the engine.

Fault, Fault Code	Possible Causes, Elimination, Remarks

Test point 19

Fuel pump relay
(DME relay) (V)
Fault code 1_42

Start engine.

The fuel pump must operate during engine starting.

If not:

Switch off ignition. Disconnect control unit plug. Use a test lead to connect terminal 36 and terminal 24 of the control unit plug. Using an additional test lead, connect terminal 3 of DME plug to ground (e.g. door stop). The pump must run.

If not:

Check in accordance with wiring diagram

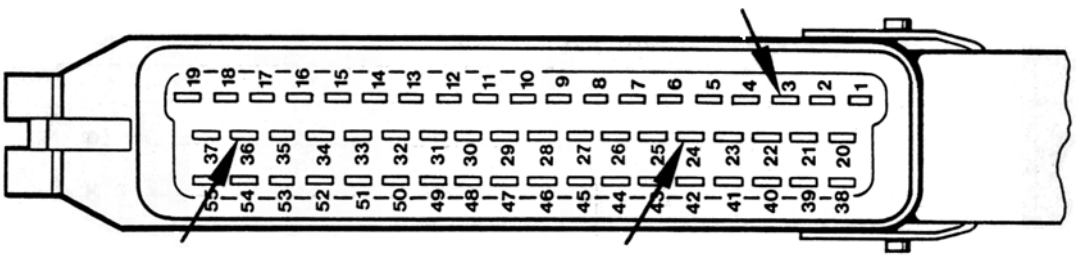

Test point 20

Tank ventilation valve (V)
Fault code 1_43

When the engine operates at operating temperature, the tank ventilation valve is opened for a longer or shorter period as a function of the load. The opening period is determined by a ground pulse from the control unit.

Activation test

To activate the tank ventilation valve directly, System Tester 9288 may be used, selecting the **Drive links menu item**.

If there is no audible pulse from the tank venting valve, check voltage supply at the terminal of the tank ventilation valve plug and body ground according to the wiring diagramm.

Ignition on.

Display: Battery voltage

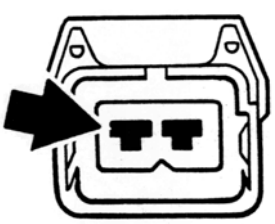

Fault, Fault Code	Possible Causes, Elimination, Remarks

Control signal test

Connect DME test lead (Bosch No. 1 684 463 093) between tank ventilation valve and plug connection. Connect and adjust engine tester according to manufacturer's instructions.

The tank ventilation valve is not activated permanently.

Testing must be performed within 7 minutes after starting the engine at operating temperature. Then interrupt activation of ventilation valve for approx. 75 seconds, continue afterwards.

Start engine and accelerate. With the engine at operating temperature, the following display must be visible on the tester:

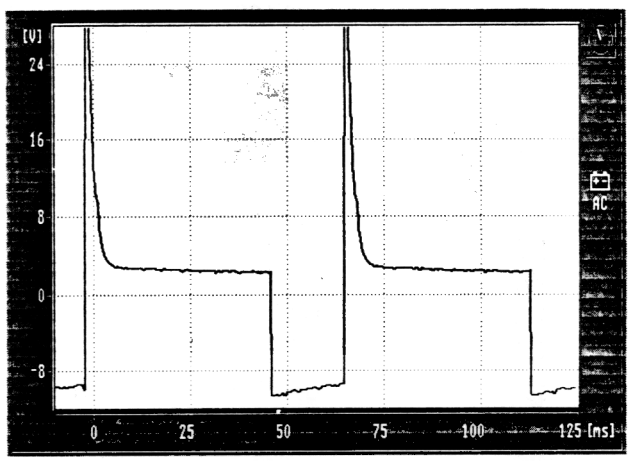

The signal becomes wider als the air throughput increases.

If there is no signal, check path in accordance with wiring diagram.

Test point 21

Warning lamp
Check Engine
Fault code 1_45

A ground signal is fed from the control unit - terminal 21 - to the "Check Engine lamp", causing this lamp to come on when an emission control component fails.

If the "Check Engine" warning lamp fails, this fault is stored in the fault memory.

Fault, Fault Code	Possible Causes, Elimination, Remarks

Check by supplying ground to disconnected DME control unit plug terminal 21 and switching on ignition. The Check Engine lamp must now come on.

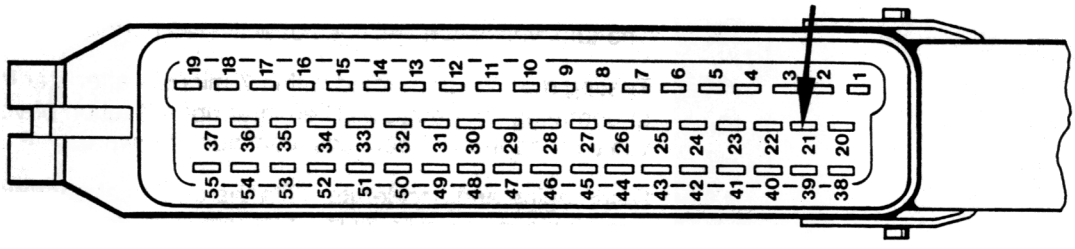

To replace a faulty display lamp, always use the specified bulb.

Reading errors using the Check Engine warning lamp is covered on page 24-55.

Test point 22 - 27

Injector valves (V/Ω)

Fault code **1_51**
1_52
1_53
1_54
1_55
1_56

Using the System Tester 9288, the injector valves may be checked directly in the **Drive links menu item** or the **Actuator active** menu item.

Selective injection allows each injector valve to be actuated individually. In case of the Drive links test point, a rather weak switching noise of the injector valves is audible.
In case of the Actuator active menu item, each individual injector valve may be isolated with the engine running.

Power supply

Disconnect valve plug, connect voltmeter to the injector valve plug terminal - refer to drawing - and ground (engine).
Ingition on.

Display: Battery voltage

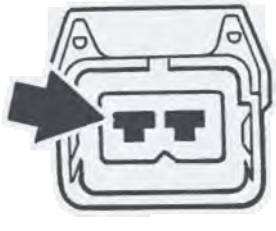

If no battery voltage is displayed, check according to wiring diagram.

Fault, Fault Code	Possible Causes, Elimination, Remarks

Checking coil resistance of injector valves

Disconnect valve plug. Check coil resistance at injector valve teminal contacts with an ohmmeter.

Test value: approx. 16 Ω

Injection output stage

Adjust oscilloscope according to manufacturer's instructions. Connect a Bosch test lead (1 684 463 093) between injector valve and plug. Connect oscilloscope according to manufacturer's instructions with the test lead.

Caution: Make sure the tester leads are not grounded in any way.

Start engine. If the injection output stage operates correctly or if the tester connections are correct, respectively, the following signal must be displayed:

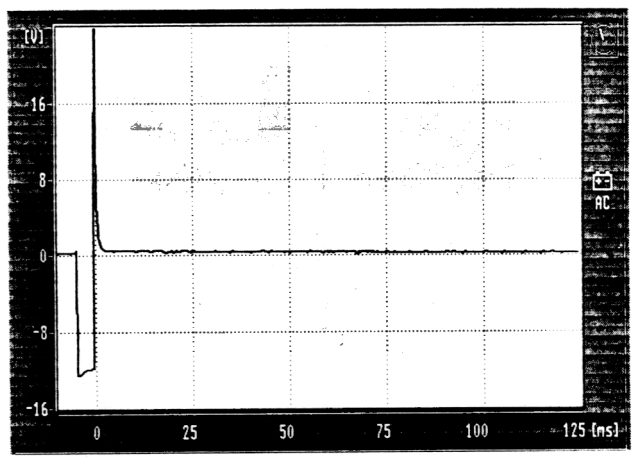

ti-signal

Test point 28

Ignition final stages

Fault code 1– 67
1–68
1–69

The ignition circuits may be checked using the **Actuator active menu item** on the System Tester 9288 (with the engine running).

Check control signal for the ignition final stages.

Fault, Fault Code	Possible Causes, Elimination, Remarks

Ignition circuit I

Connect test lead plus of the oscilloscope to terminal 2 and test lead minus to terminal 4 (ground) of the disconnected final stage plug (ignition control unit).

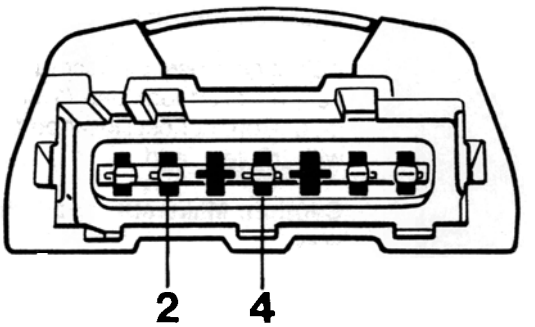

Operate starter.

The oscilloscope must display the activating signal of the DME control unit.

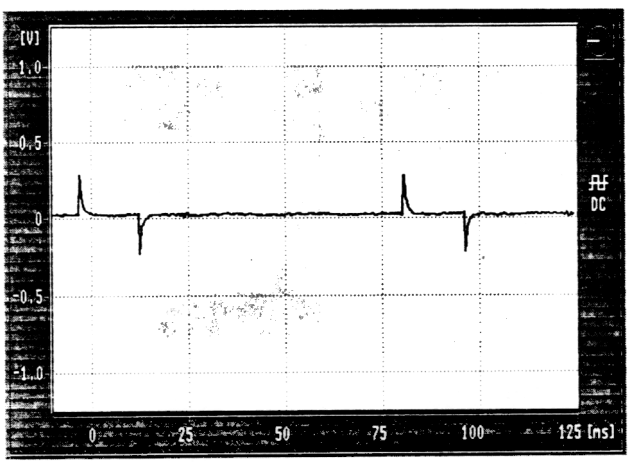

Fault, Fault Code	Possible Causes, Elimination, Remarks

Ignition circuit II

Connect test lead plus of the oscilloscope to terminal 7 and test lead minus to terminal 7 (ground) of the disconnected final stage plug (ignition control unit).

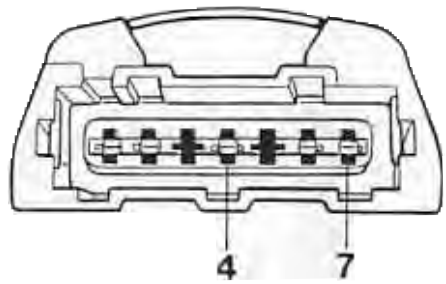

Operate starter

The activating signal must be displayed as for **ignition circuit 1**

Checking control signal for ignition coils

Ignition circuit I

Plug connected to ignition control unit. Push back rubber sleeve and connect test lead plus to terminal 1.

Ground test lead minus

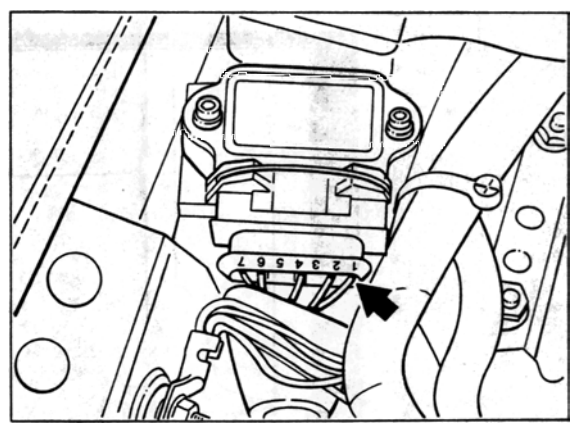

Start engine

Fault, Fault Code	Possible Causes, Elimination, Remarks

Oscilloscope shows primary pattern of ignition coil (ignition circuit I)

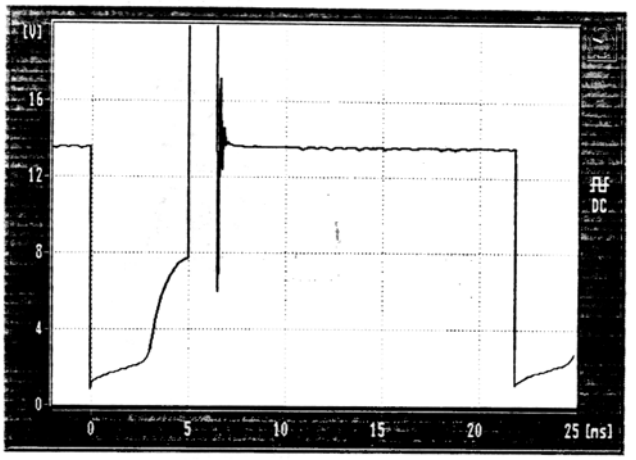

Ignition circuit II

Plug connected to ignition control unit. Push back rubber sleeve and connect test lead plus to terminal 7.

Ground test lead minus.

Start engine.

Oscilloscope shows primary pattern of ignition coil (ignition circuit II).

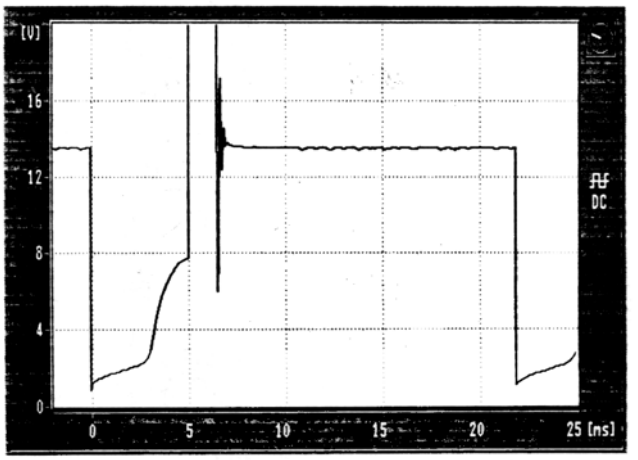

Fault, Fault Code	Possible Causes, Elimination, Remarks

Test point 29

Auxiliary air pump relay
Fehlercode 1 - 44

The auxiliary air pump may be tested using the **Actuator active menu item** on the System Tester 9288.

Conditions for testing

Cylinder head temperature > 80 °C (> 176 °F)

After selecting "Actuator active", the auxiliary air pump will be activated after a waiting period of approx. 10 seconds.

This will be indicated by the " * " symbol shown in the upper right-hand corner of the display.

Activation of the pump is limited to 20 seconds.

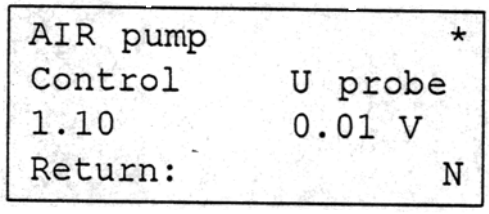

When the pump is running, sensor voltage tends approaches 0 volts and oxygen sensor regulation approaches 1.20.

Activating the pump

If oxygen sensor regulation and sensor voltage do **not** change after the pump activating symbol has appeared on the display, check pump activation and the relay according to the wiring diagram.

Activating on-off valve

If the pump activating symbol is displayed, the pump is audibly running, but the oxygen sensor regulation does not approach 1.2 and the sensor voltage does not approach 0.1, the fault lies in the on-off valve area or its wiring.

20 02 01 Checking fuel pressure

1. Remove heater fan from left-hand rear engine compartment area.

2. Detach cap from fuel collection pipe test connector and take off cap.

3. Connect pressure gauge of pressure measuring device **P 378** or VW 1318 to connecting line **9559** and connect to test connector.

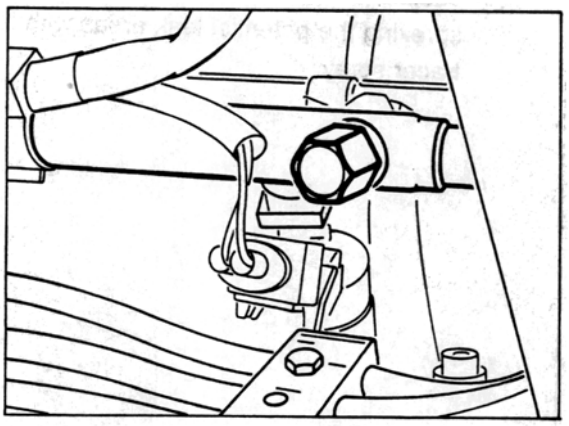

1743-20

4. Pull DME relay (R53) off the Central Electrical System and use a fuse-protected shop-made jump lead to connect pin 30 to pin 87 b (identifications 3 and 7 on Central Electrical System). The fuel pump should now operate.

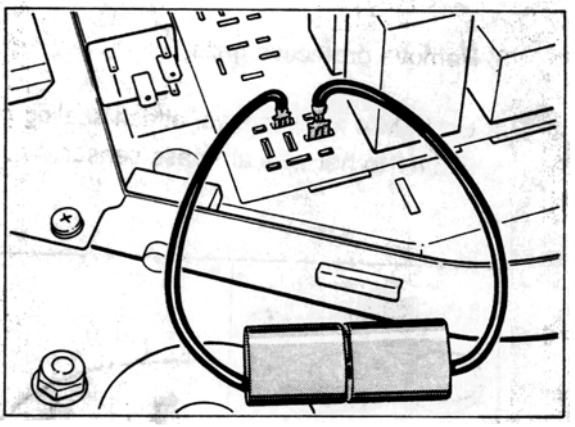

1728-20

4. Test specifications:

Engine switched off	**3.8 ± 0.2 bar**
Engine idling	**3.3 ± 0.2 bar**

Caution

The plastic cap at the test connector must always be replaced by a new brass cap (Part No. 993.110.218.01).

The seal in the brass cap **cannot** be replaced. The brass cap must therefore be used only **once**.

Tighten new brass cap to 2.5 + 0.5 Nm (1.8 + 0.4 ftlb).

Checking intake system for freedom from leaks

1. Remove complete air cleaner assembly.

2. Remove hot wire air mass sensor.

3. Remove protective grille

4. Using M 4 x 40 screws, attach sealing plate 9264/1 to hot wire air mass sensor.

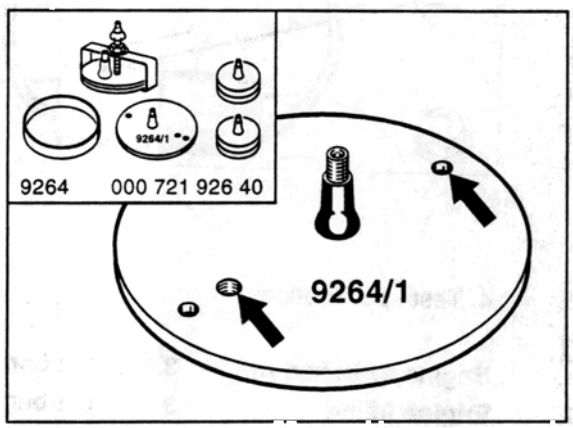

2030-20

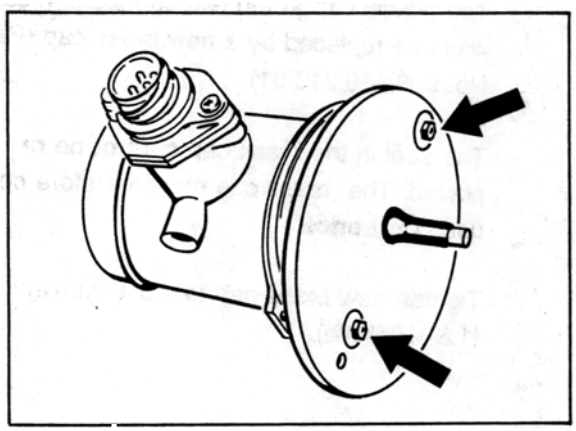

2031-20

Note

Before tightening the screw to the final torque setting, check positioning of hot wire air mass sensor on the sealing plate, i.e. no air gap must be visible anywhere when a visual check is made.

5. Build up a pressure of approx. 0.5 bar. After the pressure has been built up, air escaping from larger leaks is clearly audible. Smaller leaks may be located by spraying the potential leak areas with leak tracer spray.

Check-Engine Lamp

(Malfunction Indicator Light M.I.L.)

USA vehicles are fitted with a warning lamp that lights up if a component relevant to exhaust gas composition fails.

As a function check of the warning lamp, the lamp lights up when the ignition is switched on and goes out when the engine is running after it has been started without depressing the accelerator.

A flashing code of the warning lamp indicates the defective fault path.

To trigger the flashing code, fully depress the accelerator pedal for 3 seconds with the engine off and the ignition on until the Check-Engine lamp flashes. Then ease off the throttle.

If no fault is stored, i.e. no warning came from the warning lamp, a flashing code appears

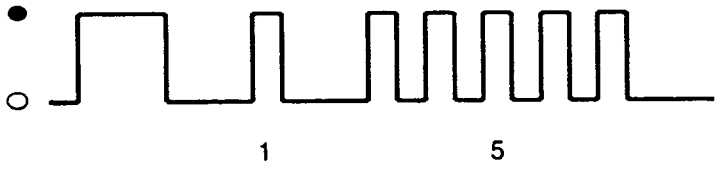

15
no fault.

● = Lamp on O = Lamp off

If the warning lamp did indicate a warning, i.e. there is a fault, a flashing code appears, e.g.

1 1 2 4

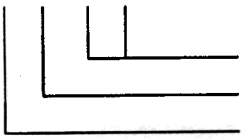

Fault code
Constant fault (2 with loose contact)
DME

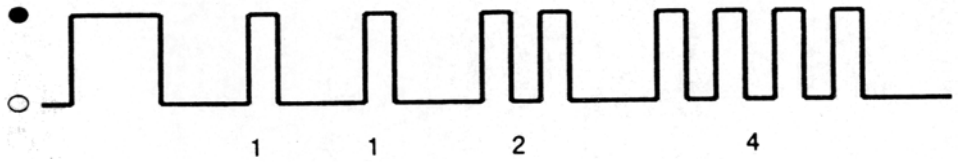

1124
Oxygen sensor

The flashing code is listed in the Diagnosis/Troubleshooting plan on page 24 - 29.
The fault can also be read directly using System Tester 9288. After the repair the fault memory must be erased using the **System Tester**.

If the fault memory is read via the Check-Engine lamp, repairs may be performed using conventional shop equipment.

37 01 Tiptronic Diagnosis / Troubleshooting

Diagnosis / Troubleshooting

Tiptronic

System G03

Contents

	Page
General Information	37 - 3
Menu (Overview of available menus)	37 - 4
Component layout	37 - 5
Functions of individual components	37 - 6
System description	37 - 9
Tools	37 - 17
Connector pin assignment (transmission control unit)	37 - 19
Fault memory (Overview of available displays)	37 - 21
Fault overview	37 - 23

General Information

A self-diagnosis feature with fault memory is built into the transmission control unit to allow specific faults within the electronic Tiptronic control to be detected and stored.

To prevent detected and stored faults from being erased when the ignition is switched off, a permanent positive voltage is present at the control unit.
Detected faults remain stored in the fault memory for at least 50 engine starts.

Caution!

If the connector is pulled off the transmission control unit or if the battery is disconnected, the fault memory is erased.

If terminal 15 becomes inoperative, the system enters the "emergency mode". The fault warning lamp does not light up in this case.

In "emergency mode" and if diagnosis wires are faulty, the diagnosis program cannot be entered (see page 03 - 3).

Printed in Germany – VI.1994

Menu

Overview of available menus

```
Menu
1 = Fault memory
2 = Drive links
3 = Input signals      >
```

```
<Menu
1 = Actual values
```

System Tester 9288 can be used to check and read out the following parameters:

Input signals
with "Input signals" menu

Kickdown
Downshift
Upshift
Manual program
Selector lever
Stop light

Actual values
with "Actual values" menu

Rpm
Speed 1
Speed 2
Injection time
Throttle
Temperature
Transverse acceleration
Gear
Voltage supply
Version coding

Drive links
with "Drive links" menu

Solenoid valve 1
Solenoid valve 2
Torque converter clutch
Gear indicator 1 - 4
Reverse relay
Ignition timing change

Component layout

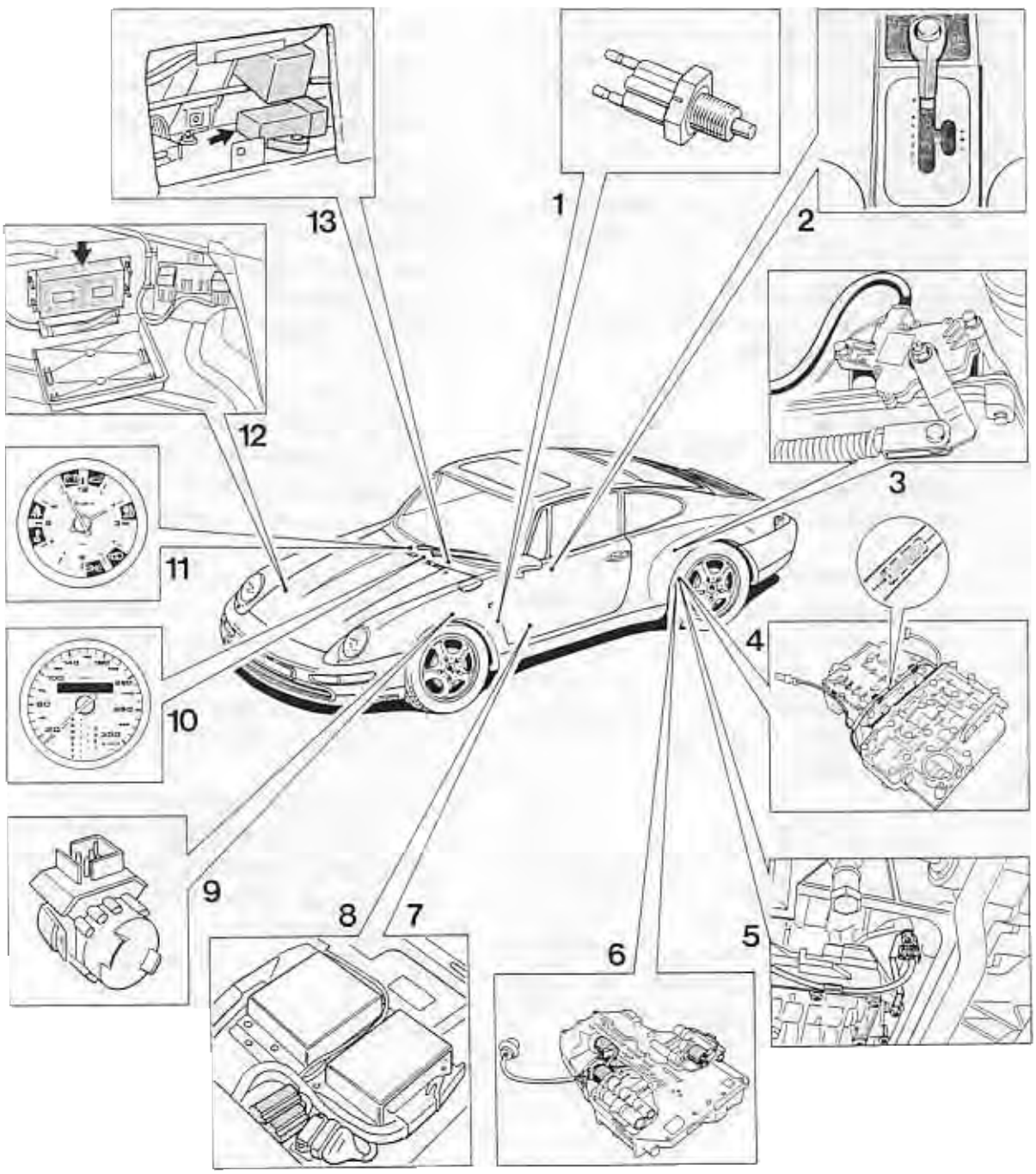

Functions of individual components

1. Stop light switch
Installation position: At brake pedal.
A stop light switch signal must be sent to the transmission control unit to start downshifts before entering a curve (refer to 1 h, page 37 - 13).

2. Selector lever
The selector lever transmits the selector lever position across a bowden cable to the transmission and to the position switch.

2a. Selector lever switch
It includes the manual, upshift, downshift and parking switches.

Manual switch
It connects the transmission control unit to ground in the manual gate in order to enable manual tip shifting.

Upshift switch
It connects the transmission control unit to ground to start an upshift.

Downshift switch
It connects the transmission control unit to ground to start a downshift.

Parking switch
In the P/N position, ground is connected to the P/N lock control unit (Shiftlock) and to the cruise control unit.
When the P/N control unit is triggered, the shiftlock function is activated; when the cruise control unit is triggered, the activated cruise control function is interrupted.

3. Position switch
Installation position: At transmission.
The position switch is operated directly by the selector lever across a bowden cable and transmits the selector lever position to the transmission control unit. It operates the reverse lights and is used to lock the starter when a drive position is engaged.
If this signal is faulty, the system enters the "emergency mode".

4. ATF temperature sender unit
Installation position: The sender is built into the transmission harness. If it is damaged, the entire wiring harness has to be replaced (refer to page 38 - 111).

The sender controls the modulating pressure of the transmission in accordance with the ATF temperature. This helps to provide comfortable shifting operations across the entire temperature range.
If the ATF temperature reaches excessive levels, the control unit selects a map with minimum power loss and closes the torque converter lockup clutch. Additionally, downshifts are made at higher engine speeds. This reduces slip inside the toruqe converter, allowing the ATF to cool down.

If the actual voltage excceds or remains below the specified signal voltage range, the sender is assumed to be faulty. A 60°C replacement value is then used for the shift operations.

5. Inductive rpm pickup

Installation position: In transmission.
The inductive pickup transmits the transmission output rpm required for speed-dependent shift point calculation and slip monitoring to the transmission control unit.
If the signal is faulty, the "emergency mode" is selected.

6. Solenoid valves (SV)

Installation position: At the slide box in the transmission.
The electronic transmission control unit controls operation of the automatic transmission across the solenoid valves. SV 1, 2 and 3 are on-off solenoids. SV 1 and 2 determine selection of the individual gears depending on how they are activated by the electronic control unit. SV 3 is used for the torque converter lockup clutch.
The SV (pressure controller) is a frequency valve used for pressure control. It controls the actuation pressure (modulation pressure) of the shifters in accordance with engine speed, engine torque and ATF temperature.

7. Transmission control unit

Installation position: Below left-hand seat.
The electronic transmission control unit is the information and command center of the entire system. It compares a multitude of information inputs (measurements) with stored driving and gearshift programs, selects the map that is suited best to the driving mode and sends commands to the transmission to execute or not to execute specific gearshifts.

8. DME control unit

Installation position: Below left-hand seat.
The DME control unit is fitted to the transmission control unit. It supplies the following input signals to the transmission control system:
Rpm signal
Fuel consumption signal
Throttle potentiometer signal.

If one of those signals is faulty, the "emergency mode" is selected.

Upon a command sent by the transmission control unit, it can also retard the ignition angle in the moment of shifting.

9. Kickdown switch

Installation position: Ahead of the accelerator.
The kickdown switch detects the accelerator being depressend beyond the full-throttle position. It then connects the transmission control unit to ground and the control unit shifts the shifting points for fast acceleration. Depending on the engine rpm, the transmission shifts down immediately and does not shift up until the maximum engine rpm is reached.
If this switch is defective, no kickdown is executed.

10. Selector lever position and gear indicator

The selector lever position and the selected gear are displayed on the speedometer.

11. Emergency mode warning lamp

The warning lamp in the clock lights when the ignition is switched on (lamp check) and goes dim when the engine is started. If this lamp comes on while the car is in motion, this is due to a system fault, causing the emergency mode to be selected. This warning lamp also indicates that the electro-hydraulic reverse lock is inoperative (refer to 3c, page 37-15).

12. ABS control unit

Installation position: In luggage compartment (right-hand wheel housing).
The ABS control unit is connected to the transmission control unit. It transmits the wheel speed of the right-hand front wheel (see 1d, page 37-13)

13. Transverse acceleration sensor

Installation position: Below center console
If the transverse acceleration limits are exceeded during cornering, the sensor transmits a signal to the transmission control unit. No shifts are then executed, even if the accelerator is depressed (refer to 1c, page 37-12).
If the signal is faulty, "no upshift suppression" is performed.

System description

The Tiptronic transmission is a load-shift planetary transmission that can be shifted either automatically or manually (via a rocker switch).
The transmission is controlled by an electronic transmission control system that selects automatically among five different shift maps (SC1 = map for very comfortable and economical driving, to SC5 = map for very sporting driving).

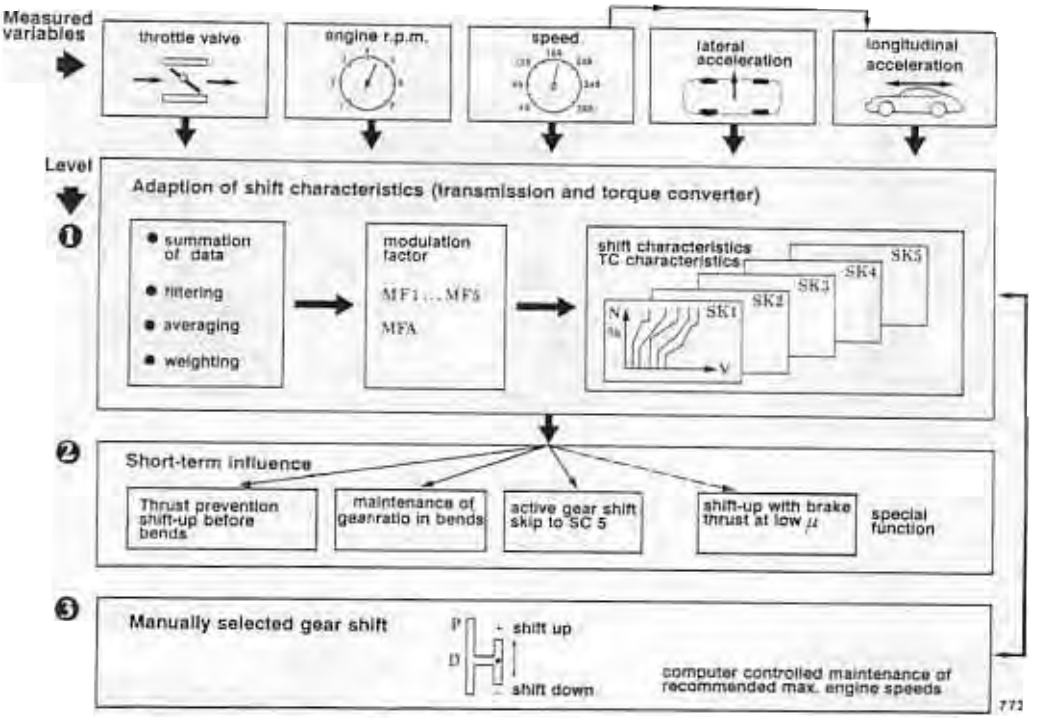

Automatic shift strategy

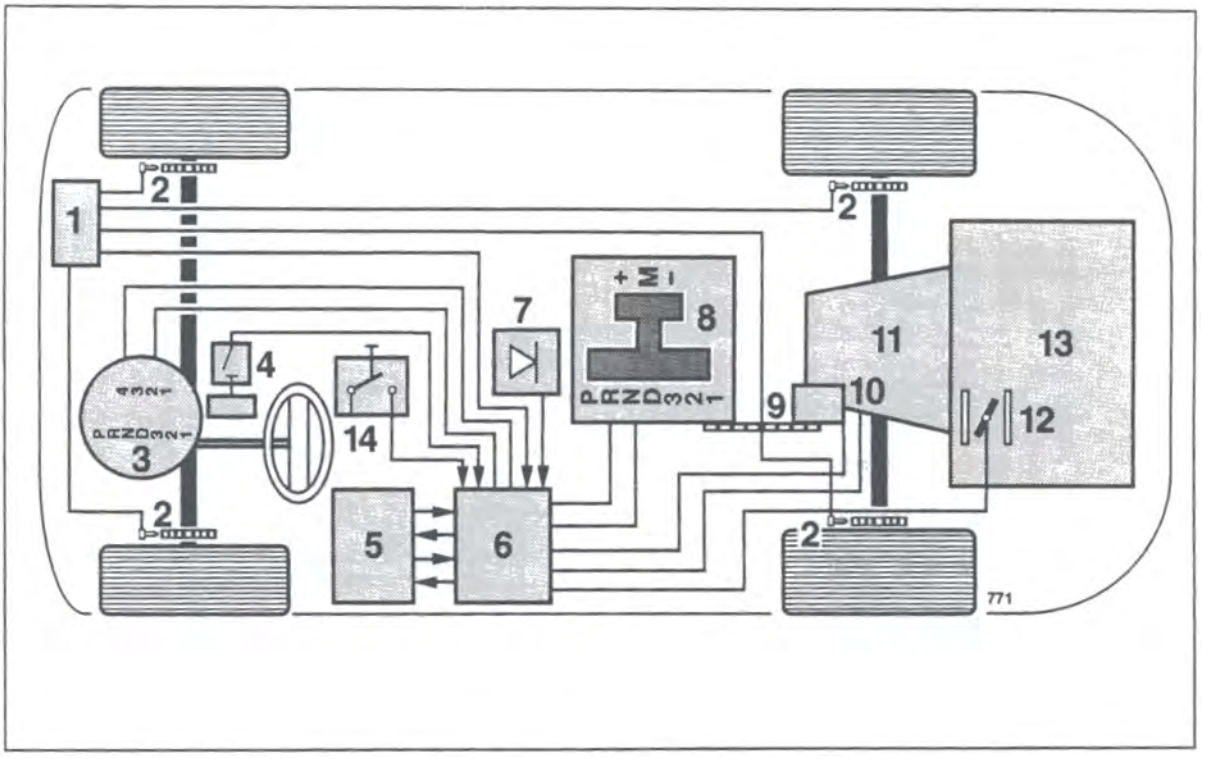

1 – ABS control unit
2 – ABS sensors at wheels
3 – Speedometer
4 – Kickdown switch
5 – DME control unit
6 – Electronic transmission control unit
7 – Transverse acceleration sensor
8 – Selector lever system with two gates
9 – Cable
10 – Multi-function switch
11 – Automatic transmission
12 – Throttle with potentiometer
13 – Engine
14 – Stop light switch

The electronic transmission control unit is the information and command center of the entire system. It compares a multitude of information inputs (measurements) with stored driving and gearshift programs, selects the map that is suited best to the driving mode and sends commands to the transmission to execute or not to execute specific gearshifts.
A short-term function activated by the driver is also available to allow the shift points to be controlled electronically by the driver.

In addition to "standard" shift control, the following programs or special functions are built into the system:

1 Automatic program

a – Adaptive shift curve adpatation
b – Skip into sporting shift map
c – Upshift prevention
d – Slip monitoring
e – Warm-up map
f – Transmission protection at high ATF temperatures
g – Electronic kickdown latching
h – Downshifting during braking (ahead of curves)

2 Manual program

a – Automatic shifts in M program

3 Special functions

a – Shift comfort control (change of ignition timing)
b – Creep function (moving off in 2nd gear)
c – Emergency mode
d – Adaptive pressure control
e – Uphill and downhill detection

1 Automatic program

1a Adaptive shift curve adaptation

The transmission control unit uses the following signals to determine the optimum shift curve:

Measuring parameter	Type of measurement
Throttle position	Potentiometer resistance
Throttle positioning speed	Time for change of resistance at potentiometer
Engine speed	Frequency measurement (from DME)
Vehicle speed	No. of pulses of transmission shaft rotor
Vehicle transverse acceleration	Signal of transverse acceleration sensor on center console
Vehicle axial acceleration / deceleration	Change of number of pulses within clock time (time-dependent change of speed)

The above signals and measurement parameters are determined within time intervals of 30...100 milliseconds and are processed in the control unit.
When these measurements are compared with the stored programs, factors are generated that can be used to enter or shift into one of the five shift maps.
The change from SC1 (very comfortable and economical shifting) to SC5 (very sporting shifting) can be accomplished within a minimum of 60 seconds.
Adaptive shift curve adaptation remains active all the time (including the manual program).

Note

In addition to five shift maps that are determined automatically by the control unit in accordance with the style of driving, the electronic transmission control can also be activated briefly by the driver (short-term input).

1b Active gear shift (Skip into sporting shift map SC5)

If the accelerator is depressed suddenly and abruptly, the system shifts immediately from the current shift map into the shift map offering maximum output (SC5). When the acceleration process is completed, the previously used shift map is selected again.

1c Upshift prevention

Prevents thrust upshifts ahead of bends

When the accelerator is released rapidly ahead of curves (throttle control speed), the control unit detects this driving situation and prevents shifting.

Staying in gear during cornering

The transverse aceleration sensor sends a signal to the control unit as soon as vehicle exceeds the transverse acceleration thresholds at which no shifts should be made. The engaged gear then remains selected regardless of any accelerator movement.

1d Slip monitoring

The engine braking effect during coasting, especially in the lower gears and on slippery surfaces, may cause the driven wheels to slip or even to lock. This status, i.e. the wheel speed difference between front and rear wheels, is detected by the transmission control unit (Using input from the ABS control unit, this unit constantly compares the speed of the driven wheels to the speed of the right-hand front wheel). To increase vehicle stability, the next higher gear is then selected immediately and the torque converter lockup clutch is opened.

1e Warm-up map

To ensure that the catalytic converter reaches its operating temperature as fast as possible, the transmission selects a shift map with higher shift speeds within the automatic program during the engine warm-up phase.
When moving off for the first time and while the engine is cold, the vehicle moves off in 1st gear.
The control signal is computed in the DME control unit and is sent to the transmission control unit.

1f Transmission protection at high ATF temperatures

To avoid excessive loads on transmission components due to overheating, the transmission control unit selects a shift map with minimum power loss within a specified temperature range and closes the torque converter lockup clutch.
As an additional protective measure, the transmission shifts down at higher engine speeds.

1g Electronic kickdown latching

The kickdown latching function allows the kickdown shift points (= max. rpm) to be used even at smaller throttle angles. The function is started when the kickdown switch is actuated and the accelerator is released rapidly (e.g. interrupted kickdown overtaking).
This condition is detected and processed by the transmission control unit. The kickdown shift speeds remain active until the accelerator is released to 50% of the full-throttle position.

1h Downshifting during braking (ahead of bends)

Depending on actuation of the brakes, brake deceleration, transverse acceleration and vehicle speed, downshifts are executed during braking at higher speeds than during normal vehicle deceleration. In the braking phase, downshifts into the next lower gear are made ahead of the curve. This allows the braking effect of the engine to be used and load on the service brakes to be reduced.

2 Manual program

2a Automatic shifts

The shift operations can also be influenced manually. For this purpose, move selector lever from the "D" position into the manual shift plane to the right. Short forward tipping (+) shifts the transmission up, while tipping towards the rear (-) shifts down. The transmission control unit monitors the admissible rpm limits in this program as well. If the rpm limits stored in the computer are exceeded or not reached in the individual gears, automatic upshifts or downshifts are made even if the selector lever remains in the manual gate.
Automatic downshifts are only made down to 2nd gear. If it is desired to move off in 1st gear (e.g. after stopping at a red light), 1st gear must be engaged by actuating the rocker switch.
The kickdown feature cannot be used since it is not activated in this program.
The selected gear is displayed in the speedometer.
If the manual selection feature fails, the electronic transmission control unit automatically shifts to the automatic program, and the "D" position is displayed on the selector lever position display.

3 Special functions

3a Shift comfort control (Change of ignition timing)

With this type of control, the transmission control unit is connected to the DME control unit. At the shift point, the engine control unit reacts by retarding the ignition timing. This reduces engine torque during the shift process, thus increasing shift comfort and ensuring a long service life of the shift actuators.
If the signal is faulty, "emergency mode" is selected.

3b Creep function (moving off in 2nd gear)

With this function, the vehicle moves off in shift position "D" and at a throttle angle < 35% in the automatic program and in 2nd gear in the manual program.
If the driver wants to move off in 1st gear, the throttle angle must be > 35% in the "D" shift position or position "3", "2" or "1" has to be preselected. In the manual program, 1st gear has to be selected to be activated (also refer to 1e, page 37 - 13).

Note

When moving off for the first time and while the engine is cold, the vehicle moves off in 1st gear.

3c Emergency mode

The electronic transmission control unit switches off the solenoid valves when specific signals or circuits become faulty and thus prevents gearshifts. If this occurs while the vehicle is in motion, 4th gear is selected regardless of the selector lever position and remains activated until the vehicle comes to a stop. When restarting the vehicle or after selecting reverse gear once, only third gear remains active.
A warning lamp in the clock displays this system fault and indicates that the electronic-hydraulic reverse interlock is inoperative. Take care never to move the shift lever to the "R" position while the vehicle is in motion.

3d Adaptive pressure control

Adaptive pressure control monitors the hydraulic shift pressures (modulating pressure) and adapts them to the transmission and driving status. This ensures good shift comfort throughout and increased service life of the shift actuators.

3e Uphill and downhill detection

In addition to using driving mode data when selecting the shift mode map, the intelligent shift program also takes the driving resistance into account as resistance changes make themselves felt especially on gradients and downhill slopes.
This detection feature causes the system to shift into the map that provides the optimum gear for that particular gradient. This reduces gearshift frequency, allowing the engine braking effect to be used to better effect when driving downhill in a lower gear and therefore requiring less frequent braking.

Printed in Germany – VI.1994

Tools

Test adapter 9543

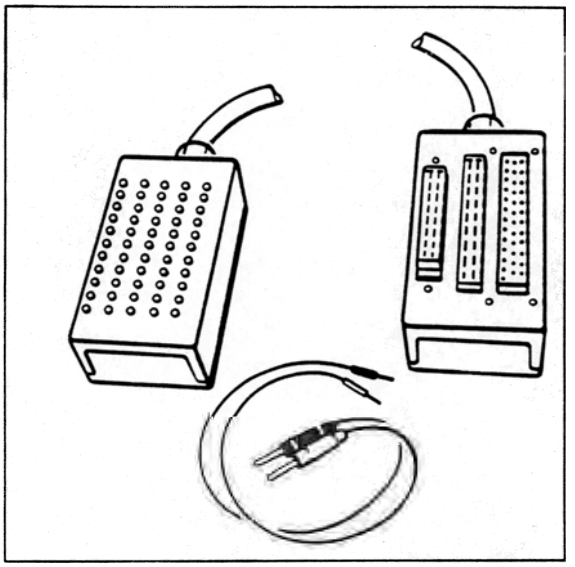

Note

The test adapter must be used for all tests on the electrical wiring (e.g. transmission control unit connector / sensors).
It protects the connectors and allows the individual pins to be located easier.

Connector pin assignment (Transmission control unit connector)

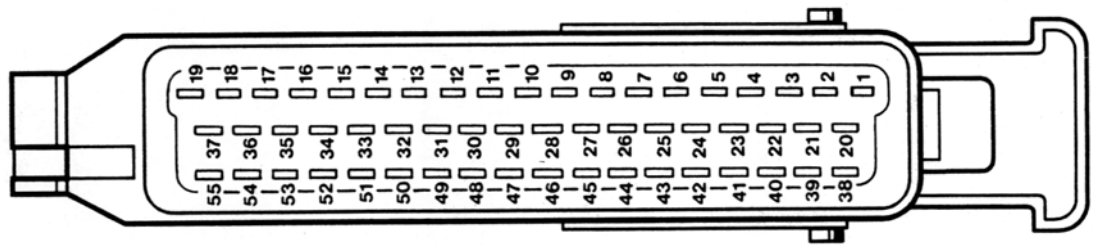

1 - Terminal 15 E
2 - Output rpm +
3 - Engine rpm (TN)
4 - Stop light
5 - Solenoid valve 1
6 - Solenoid valve modulating pressure
7 - Electronics - Ground
8 - Input +5 V (reference voltage)
9 - Pin coding 1
10 - Upshift
11 - Throttle signal
12 - Front wheel speed (FR)
13 - Manual program display
14 - Position Y switch
15 - L wire
16 - 1st gear display
17 - Not used
18 - Not used
19 - + for solenoid valves
20 - Shield / output rpm
21 - Load signal (TI)
22 - Not used
23 - Warning lamp
24 - Solenoid valve 2
25 - Reverse light relay
26 - Power ground
27 - Not used
28 - Pin coding 2
29 - Downshift
30 - Kickdown
31 - 2nd gear display
32 - Change of ignition timing
33 - Position Z switch
34 - Not used
35 - Not used
36 - Not used
37 - Not used
38 - Output rpm –
39 - Terminal 30
40 - Transverse acceleration sensor
41 - Redundancy
42 - Lockup clutch solenoid valve
43 - 3rd gear display
44 - Ground (ATF temperature sensor/ transverse acceleration sensor)
45 - Output + 5V
46 - ATF-Temperature sensor
47 - Not used
48 - Input signal (manual program)
49 - Not used
50 - Position X switch
51 - K wire
52 - Not used
53 - Not used
54 - Not used
55 - 4th gear display

Fault memory

Overview of displays

```
XX: Voltage
-> control unit
Signal unplausible
present              XX
```

```
XX: Voltage
-> drive links
Open circuit
present              XX
```

```
XX: Voltage
-> Sensor
Op.circ/Ground short
present              XX
```

```
XX: Speed signal
<- DME-SG
Op.circ/Ground short
present              XX
```

```
XX: Load signal
<- DME-SG
Op.circ/Ground short
present              XX
```

```
XX: Change of
ignition timing
Op.circ/Ground short
present              XX
```

```
XX: Throttle plate
signal <- DME-SG
Op.circ/Ground short
present              XX
```

```
XX: Throttle plate
signal <- DME-SG
Read out DME
fault memory!
```

```
XX: Solenoid
valve 1
Op.circ/Ground short
present              XX
```

```
XX: Solenoid
valve 2
Op.circ/Ground short
present              XX
```

```
XX: Solenoid valve -
torque conv. clutch
Op.circ/Ground short
present              XX
```

```
XX: Pressure
regulator
Op.circ/Ground short
present              XX
```

```
XX: Transmission Gear
Selection Switch
Signal unplausible
present              XX
```

```
XX: Speed sensor

Op.circ/GND/+ short
present              XX
```

```
XX: Transmission
temperature sensor
Short to ground
present              XX
```

```
XX: Transmission Gear
Selection Switch
Signal unplausible
present              XX
```

```
XX: Control unit
faulty
XXXXXXXX
7 6 5 4 3 2 1 0
```

```
XX: Control unit
faulty
XXXXXXXX
7 6 5 4 3 2 1 0
```

```
XX: Control unit
faulty
XXXXXXXX
7 6 5 4 3 2 1 0
```

```
XX: Down-shift fault

Signal unplausible
present                XX
```

```
XX: Rev. limiter

Signal unplausible
present                XX
```

```
XX: Manual program
switch
Short to ground
present                XX
```

```
XX: Tip-switch
up/down shifting
Short to ground
present                XX
```

```
XX: Kick-down switch
Short to ground
present                XX
```

```
XX: Transverse accel.
sensor
Op.circ/Ground short
present                XX
```

```
XX: Combi-instrument
input
Short to +
present                XX
```

```
XX: -R- position
switch
Signal unplausible
present                XX
```

```
XX: Reverse light
relay
Short to +
present                XX
```

```
XX: Unknown
fault code
XXXXXXXX
7 6 5 4 3 2 1 0
```

Fault overview

Test point	Fault code	Item	Results of fault	Page
		Supply voltage (Term. 30)	No diagnosis	37 - 25
2	11	Supply voltage (Term. 15)	Emergency operation No display	37 - 25
3	13	Supply voltage, drive links	Emergency operation	37 - 26
4	14	Supply voltage, sensor 5 V	Emergency operation	37 - 26
5	21	Rpm signal (engine)	Emergency operation	37 - 27
6	22	Load signal	Emergency operation	37 - 27
7	24	Change of ignition timing	Emergency operation	37 - 28
8	25	Throttle potentiometer	Emergency operation	37 - 30
9	31	Solenoid valve 1	Emergency operation	37 - 30
10	32	Solenoid valve 2	Emergency operation	37 - 31
	33	Solenoid valve, torque conv. clutch	Emergency operation	37 - 31
12	34	Pressure regulator	Emergency operation	37 - 32
13	35	Selector lever switch	Emergency operation	37 - 33
14	36	Speed sensor, transmission	Emergency operation	37 - 35
15	37	Transmission temperature sensor	Replacement value 60°C	37 - 36
16	38	Selector lever switch (for starting)	Emergency operation	37 - 37
17	42	Control unit faulty	Emergency operation	37 - 37
18	43	Control unit faulty	Emergency operation	37 - 38
19	44	Control unit faulty	Emergency operation	37 - 38
20	45	Downshift protection	Emergency operation	37 - 38
21	46	Rev. limiter	Emergency operation	37 - 38
22	51	Manual program switch	No manual program	37 - 38
23	52	Up/down shift tip switch	No manual program	37 - 38
24	53	Kickdown switch	No kickdown	37 - 39
25	54	Transverse acceleration sensor	No upshift prevention	37 - 39

Test point	Fault code	Item	Results of fault	Page
26	55	Speed signal 1 (ABS)	No upshift prevention No manual program No downshift during braking	37 - 40
27	56	Combi-instrument input	No diagnosis	37 - 41
28	59	R-position switch	Emergency operation	37 - 41
29	60	Reverse light relay	No diagnosis	37 - 42
30	XX	Unknown fault code	Fault memory	37 - 42

Fault, fault code	Possible causes, remedy, notes
Test point 1 **Permanent positive (on-board voltage)**	**No diagnosis possible.** Possible faults: Open circuit, short to ground, loose contact **Note:** – **No fault storage** (Faults are lost when ignition is switched off) – Open circuit/short to ground: Check fuse No. 12 – Fuse faulty: Pull connector off transmission control unit Check pin 39 for short to ground – Short to ground? Check wiring according to wiring diagram – No short to ground: Transmission control unit faulty Fuse o.k.: Check voltage according to wiring diagram
Test point 2 **Control unit voltage** (Fault code 11 Signal unplausible)	**Emergency operation, no display** Possible faults: Open circuit, short to positive, short to ground, loose contact, voltage outside of valid range 1) Tiptronic warning lamp does not light when ignition is switched off Check fuse No. 27 Measure voltage at fuse No voltage: Check wire to relay R11 or operation of relay Measure voltage at transmission control unit connector pin 1 No voltage: Check wiring according to wiring diagram 2) Voltage outside of valid range Fault code 11 Signal unplausible – Low voltage? U < 11V Check battery, alternator, regulator! – O.k.? Check for contact resistance at junctions, deformation and corrosion of contacts – Excessive voltage? Check power supply of vehicle (alternator, regulator) U > 14.5 V with engine running

Printed in Germany, VI – 1994

Fault, fault code	Possible causes, remedy, notes
Test point 3 **Voltage of drive links** Fault code 13	**Tiptronic warning lamp comes on, transmission is in emergency mode** Possible faults: Transmission relay in control unit cannot pick up or drop out Pull off transmission connector. Measure voltage at pin M (system voltage) 1) No voltage: Pull off transmission control unit connector. Check wiring of transmission control unit pin 19 to transmission connector pin M Wiring o.k.: Transmission control unit faulty 2) Voltage cannot be switched off: Fault lamp does not come on when fault occurs (e.g. connector pulled off at throttle potentiometer) Pull off transmission control unit No voltage at pin M: Transmission control unit faulty Voltage at pin M: Short to positive in wiring (Transmission → transmission control unit)
Test point 4 **Voltage of sensors** Fault code 14	**Tiptronic warning lamp comes on, transmission is in emergency mode.** Possible faults: Open circuit, short to ground, short to positive Voltage supply 5 V ±0,5 V 1) Check voltage at transverse acceleration sensor pin 3 with ignition switched on 2) Pull connector off transmission control unit. Ignition "off" Check wiring from transmission control unit connector pin 45 to transverse acceleration sensor pin 3 for continuity. Short to ground and short to positive from transverse acceleration sensor pin 3 to pin 7 (ground) and pin 1 (15)

Fault, fault code	Possible causes, remedy, notes
Test point 5 **Rpm signal from DME** Fault code 21	**Tiptronic warning lamp comes on, transmission is in emergency mode** Possible faults: Open circuit/short to ground, short to positive, loose contact 1) Signal check Check signal with Tester 9288. (Engine operation) Check signal with oscilloscope at transmission control unit connector pin 3. If signal o.k.: Transmission control unit faulty  Signal shape 2) Open circuit, short to ground, short to positive Check wiring to wiring diagram. Check transmission control unit connector pin 3 to DME connector pin 6 for continuity, short to ground and short to positive. (Ground at transmission control unit = pin 7, positive at transmission control unit = pin 1) Connections o.k.: DME control unit faulty
Test point 6 **Load signal from DME** Fault code 22	**Tiptronic warning lamp comes on, transmission is in emergency mode** Possible faults: Open circuit, short to ground, short to positive, loose contact 1) Signal check Check signal with Tester 9288 (injection time) with engine running Check signal with oscilloscope at transmission control unit connector pin 21. 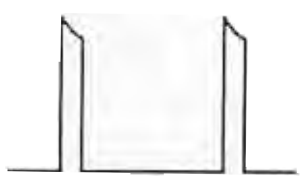

Fault, fault code	Possible causes, remedy, notes
	If signal o.k.: Transmission control unit faulty Signal shape: ti signal 2) Open circuit, short to ground, short to positive Check wiring according to wiring diagram. Check transmission control unit connector pin 21 to DME connector pin 17 for continuity, short to ground and short to positive (Ground at transmission control unit connector = pin 7, positive at transmission control unit connector = pin 1) Connections o.k.: DME control unit faulty
Test point 7 **Chang eof ignition timing** Fault code 24	**Tiptronic warning lamp comes on, transmission is in emergency mode** Possible faults: Open circuit, short to ground, short to positive 1) Check operation with Tester 9288 (drive link test) Idle speed must drop. If it does not, check as follows: 2) Check voltage drop – Remove cover of plugged-in connector X4/1 – Switch on ignition – Measure voltage at pin 7. Specification: approx. 5 Volt – Trigger signal with Tester. Voltage must drop – Operation o.k.: Check wiring to DME control unit (Connector X 4/1 pin 7 to DME control unit pin 51) – Wiring o.k.: DME control unit faulty – Operation not o.k.: Check wiring to transmission control unit (connector X4/1 pin 7 to transmission control unit connector pin 32) – Wiring o.k.: Transmission control unit faulty Note: Check engine to body ground strap

Fault, fault code	Possible causes, remedy, notes

Connector X 4/1 (below left seat)

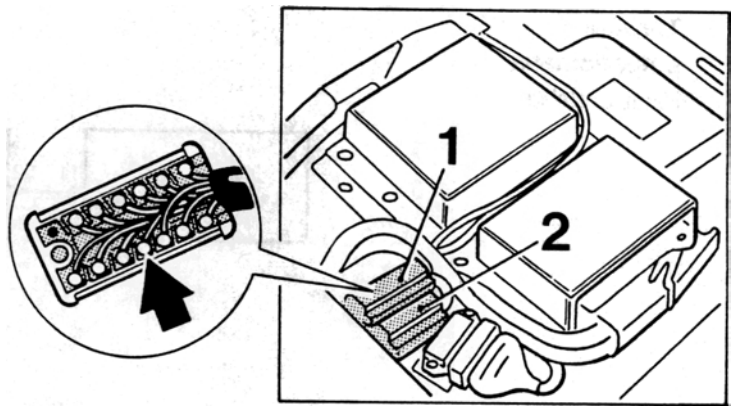

1 = Connection X 4/1

Fault, fault code	Possible causes, remedy, notes

Test point 8

Throttle potentiometer
Fault code 25

Tiptronic warning lamp comes on, transmission is in emergency mode

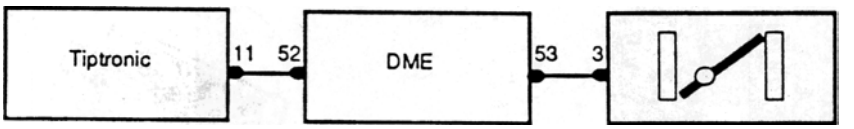

Detectable faults: Open circuit/short to ground, short to positive

The "Throttle potentiometer" fault is also stored in the DME, the fault must be corrected according to the DME test plan (Test point 3)

Tiptronic test:

Check display % with Tester 9288 (Actual values menu)

If no display:

1) Measure voltage signal at transmission control unit connector pin 11 with voltmeter.Vary from 1 V at idle to approx. 10 V at full throttle (Ignition on)

If no voltage:

2) Check wiring according to wiring diagram.
Check transmission control unit connector pin 11 to DME pin 52 for continuity, short to ground and short to positive (ground at transmission control unit connector =pin 7, positive at trans mission control unit connector =pin 1)

If continuity o.k. = DME control unit faulty

If voltage o.k. =Transmission control unit faulty

Test point 9

Solenoid valve 1
Fault code 31

Tiptronic warning lamp comes on, transmission is in emergency mode
Possible faults: Open circuit, short to ground, short to positive

1) Check operation with Tester 9288 (Drive link test)

Fault, fault code	Possible causes, remedy, notes

- Acoustical test
  Triggering cycle of solenoids is audible as a clicking noise near the transmission

2) Pull connector off transmission control unit.

a) Measure resistance between pin 5 and pin 19. Specification: 34 Ohms, tolerance 10 %

b) Check that pins 5 and 19 are free from shorts to ground
- Check o.k.: Transmission control unit faulty

3) Also pull off connector at transmission.

Check wiring (transmission control unit connector pin 5 to transmission connector pin H and transmission control unit connector pin 19 to transmission connector pin M).

Wiring o.k.: Solenoid valve faulty

Note: If a "sporadic solenoid fault" occurs, check connections for pushed-back pins.

Test point 10

Solenoid valve 2
Fault code 32

Tiptronic warning lamp comes on, transmission is in emergency mode
Possible faults: Open circuit, short to ground, short to positive

1) Check operation with Tester 9288 (Drive link test)

- Acoustical test
  Triggering cycle of solenoids is audible as a clicking noise near the transmission.

2) Pull off connector at transmission control unit

a) Measure resistance between pin 24 and pin 19.
Specification: 34 Ohms, tolerance 10 %

b) Check that pins 24 and 19 are free from shorts to ground.

Check o.k.: Transmission control unit faulty

3) Also pull off connector from transmission.

Check wiring (transmission control unit connector pin 24 to transmission connector pin K and transmission control unit connector pin 19 to transmission connector pin M).

Wiring o.k.: Solenoid valve faulty

Fault, fault code	Possible causes, remedy, notes
Test point 11 **Solenoid valve torque conv. clutch** Fault code 33	**Tiptronic warning lamp comes on, transmission is in emergency mode** Possible faults: Open circuit, short to ground, short to positive 1) Check operation with Tester 9288 (Drive link test) Acoustical test Triggering cycle of solenoids is audible as a clicking noise near the transmission. 2) Pull off connector from transmission control unit a) Measure resistance between pin 42 and pin 19 Specification: 34 Ohms, tolerance 10 %. b) Check that pins 42 and 19 are free from shorts to ground Check o.k.: Transmission control unit faulty 3) Also pull off connector from transmission Check wiring (transmission control unit connector pin 42 to transmission connector pin L and transmission control unit connector pin 19 to transmission connector pin M) Wiring o.k.: Solenoid valve faulty
Test point 12 **Pressure regulator** Fault code 34	**Tiptronic warning lamp comes on, transmission is in emergency mode** Possible faults: Open circuit, short to ground, short to positive 1) Pull off connector from transmission control unit a) Measure resistance between pin 6 and pin 19 Specification: 6 Ohms ±2 Ohms b) Check that pins 6 and 19 are free from shorts to ground Check o.k.: Transmission control unit faulty 2) Also pull off connector from transmission – Check wiring (Transmission control unit connector pin 6 to transmission connector pin B and transmission control unit connector pin 19 to transmission connector pin M) – Wiring o.k.: Pressure regulator faulty

Fault, fault code	Possible causes, remedy, notes

Test point 13

Selector lever switch/transmission Fault code 35

Tiptronic warning lamp comes on, transmission is in emergency mode

Possible faults: Open circuit, short to ground, short to positive

1) Check operation with Tester 9288

Adjustment of Tester 9288:
Menu: „Input signals" = Selector lever/Manual program

Shift through selector lever positions P, R, N, D, 3, 2, 1 one after another.

Compare: Selector lever position
Position indicator in speedometer
Position indicator on Tester 9288

Caution:

Due to its design, the display on Tester 9288 appears with a certain delay - shift through positions sufficiently slowly.

No matching: Check wiring according to wiring diagram, check position switch with/without wiring

2) Pull off transmission control unit connector, switching ignition off

- Use ohmmeter to check transmission control unit connector pin 7 for ground
- If no ground is present, refer to wiring diagram MP IV

3) Measure position switch according to table 1

Ohmmeter display – = No continuity
0 = Continuity

Table 1

	Pin 14	Pin 33	Pin 50	Pin 41 → to ground
P	–	–	0	0
R	0	–	0	0
N	0	–	–	–
D	0	0	–	–
3	0	0	0	–
2	–	0	0	
1	–	0	–	

Measurements o.k.: Control unit faulty

Measurements present, but incorrect sequence?

Check cable from selector lever switch to position switch

Printed in Germany, VI – 1994

Fault, fault code | Possible causes, remedy, notes

- Is cable adjusted correctly?
- Repair instructions: „Adjust position switch"
- Open circuit, short to ground, short to positive?

4) Check position switch without connections
- Pull connector off the switch
- Check switch for continuity acc. to Table 2

Fig. 7

Ohmmeter display

– = No continuity
0 = Continuity

Table 2

Pin	E-B	E-C	E-A	F-G	H-D
P	–	–	0	0	0
R	0	–	0	–	0
N	0	–	–	0	–
D	0	0	–	–	
3	0	0	0		
2	–	0	0		
1	–	0	–		

Faulty? Replace position switch

Fault, fault code	Possible causes, remedy, notes
Test point 14 **Speed sensor (Transmission)** The sensor transmits the transmission speed. The transmission control unit compares it to the wheel speed. Fault code 36	**Tiptronic warning lamp comes on, transmission is in emergency mode** Possible faults: Open circuit, short to ground, short to positive, loose contact **Note:** Check with Tester 9288 (Actual values). Store fault as of engine speed = 2,800 rpm 1) Pull off connector from transmission control unit a) Measure resistance between pin 2 and pin 38. Specification: approx. 350 Ohms b) Check that pin 2 and pin 38 are free from shorts to ground. Check o.k.: Transmission control unit faulty 2) Also pull connector off the transmission. Check continuity: Transmission control unit connector pin 2 to pin A Pin 38 to pin F Short to ground from pin 2 and pin 38 to pin 7 (ground) Pin 2 and pin 38 to pin 20 (screening) Short to positive from pin 2 and pin 38 to pin 1 (positive) **Note:** If it is to be assumed that intermittent faults linked to the output speed occur, check the screening connection at pin 20 after opening the connector housing Wiring o.k.: Check sensor and wiring in transmission Possible transmission faults: ATF strainer clogged, air intake if oil starvation occurs etc., power transmission interrupted

Printed in Germany, VI – 1994

Fault, fault code	Possible causes, remedy, notes

Test point 15

Transmission temperature sensor

Fault code 37

If a fault occurs, a replacement value 60° C is assumed.

Possible faults: Open circuit, short to ground, short to positive, corrupted signal

Note:

Existing faults are stored only when the engine is running.

1) Check temperature with Tester 9288 (Actual values)

2) Pull off connector from transmission control unit

Measure resistance between pin 46 and pin 44

Specification: approx. 1,00 kΩ/20° C
1,15 kΩ/40° C
1,30 kΩ/60° C

Check wiring.

Check o.k.: Transmission control unit faulty

Note:

If the display

"Temperature sensor
short to positive"

and/or

"Transverse acceleration sensor
short to positive"

appears, the control unit may be faulty.

1. Repair short circuit
2. Replace control unit.

Printed in Germany, VI - 1994

Fault, fault code	Possible causes, remedy, notes
Test point 16 **Selector lever switch/transmission** Fault code 38	**Tiptronic warning lamp comes on, transmission is in emergency mode** Specification: Engine can be started in P or N positions only Actual status: Engine can also be started in selector lever positions other than P and N Possible faults: Open circuit, short to ground, short to positive Start is possible except in P and N 1) Check adjustment of bowden cable to position switch If required, run electrical tst as described under Test point 13, item 4 No start possible? 2) Pull off start relay R 61 from Central Electrical System – Ground must be present at relay base terminal 85 when the selector lever is set to P and N. – Ground is present: Check start relay and ignition switch with related wiring – No ground: Check position switch and wiring to start relay 3) Check position switch as described under Test point 13, item 4 Position switch o.k. Check continuity: a) Position switch pin G to start relay R61. b) Junction X4/1 pin 6 to DME connector pin 42 Wiring o.k. Transmission-related starting requirements are met.
Test point 17 **Control unit faulty** Fault code 42	**Tiptronic warning lamp comes on, transmission is in emergency mode** Replace control unit

Fault, fault code	Possible causes, remedy, notes
Test point 18 **Control unit faulty** Fault code 43	**Tiptronic warning lamp comes on, transmission is in emergency mode** Replace control unit
Test point 19 **Control unit faulty** Fault code 44	**Tiptronic warning lamp comes on, transmission is in emergency mode** Replace control unit
Test point 20 - 21 **Downshift fault/ rev. limiter** Fault code 45, 46	**Tiptronic warning lamp comes on, transmission is in emergency mode** Possible faults: Corrupted rpm signal from output or engine, or incorrect output/engine rpm ratio Faulty transmission (Clutch slips) 1) Check inductive rpm sensor, Test point 14 2) Check transmission
Test point 22 **Manual program switch** Fault code 51	**No manual program available** Detectable faults: Short to ground 1) Check operation with Tester 9288 (Input signals) 2) Pull off connector from transmission control unit Check ground at pin 26. Check connection from transmission control unit connector pin 48 to selector lever switch/pin 3 Connection o.k. Replace selector lever switch plate Switch and connection o.k.: Transmission control unit faulty
Test point 23 **Upshift/downshift tip switch** Fault code 52	**No manual program available** Detectable faults: Short to ground 1) Check operation with Tester 9288 (Input signals) 2) Pull off connector from transmission control unit Check ground at pin 26

Fault, fault code	Possible causes, remedy, notes
	Check connection from transmission control unit connector / pin 10 an selector lever switch/pin 2 (upshift) or connection from transmission control unit connector/pin 29 to selector lever switch/pin 1 (downshift). Connection o.k.: Replace selector lever switch unit Switch and connection o.k.: Transmission control unit faulty
Test point 24 **Kick-down switch** Fault code 53	**No kickdown shift** Detectable faults: Short to ground 1a) Acoustical switch test b) Check operation with Tester 9288 (Input signals test) 2) Remove and check kickdown switch (Note: Adjust switch after replacement) 3) Pull off connector from transmission control unit. Check connection from transmission control unit connector pin 30 to kickdown switch pin 2. Check o.k.: Transmission control unit faulty
Test point 25 **Transverse acceleration sensor** Fault code 54	**Upshifting in curves is not prevented** Detectable faults: Open circuit/short to ground, short to positive 1) Check sensor with Tester 9288 (Actual values) (Nominal value approx. 0 g with vehicle on a level surface. The sensor can be checked by raising the vehicle on one side) 2) Pull connector off the sensor. Check sensor supply (5 V) at pin 3 and ground at pin 1. 3) Check wiring according to wiring diagram Check continuity: Pin 45/transmission control unit connector to pin 3/sensor Pin 40/transmission control unit connector to pin 2/sensor Pin 44/transmission control unit connector to pin 1/sensor Short to ground: Pin 2 and pin 3/sensor to pin 7/transmission control unit connector (ground) Short to positive: Pin 1, 2 and 3/sensor to pin 1/transmission control unit connector (positive)

Printed in Germany, VI – 1994

Fault, fault code	Possible causes, remedy, notes
	Wiring o.k.: Replace sensor Fault persists: Transmission control unit faulty
Test point 26 **Speed signal 1 of ABS** Fault code 55	**Upshifting is not prevented, no manual program** Detectable faults: Open circuit/short to ground/short to positive 1) Signal comes from ABS. ABS o.k.? 2) Check signal with Tester 9288, raising the vehicle and rotating right-hand front wheel manually. 3) Check wiring according to wiring diagram Check continuity: Pin 12/transmission control unit connector to ABS control unit connector pin 42

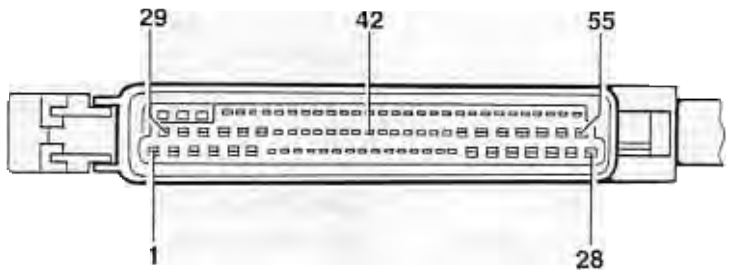

Short to ground: Pin 12 to pin 7/transmission control unit connector (ground)

Short to positive: Pin 12 to pin 1/transmission control unit connector (positive)

4) Check signal with oscilloscope (transmission control unit connector pin 12) (ignition on)

Fault, fault code	Possible causes, remedy, notes
	Speed signal 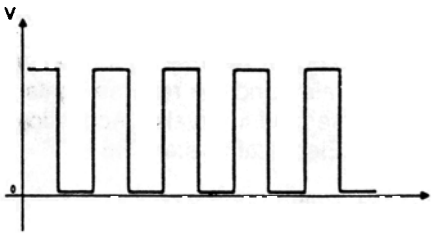 Signal present: Transmission control unit faulty No signal: ABS faulty
Test point 27 **Combi-instrument input** Fault code 56	**No diagnosis possible.** Detectable faults: Open circuit/short to ground, short to positive 1) Switch manual program on and off Check display in instrument 2) Pull off transmission control unit connector. Connect pin 13 to ground. Display o.k.: EGS faulty 3) Check wiring of transmission control unit pin 13 to speedometer pin 9. Wiring o.k. Speedometer faulty
Test point 28 **R-position switch** Fault code 59	**Tiptronic warning lamp comes on, transmission is in emergency mode** Possible faults: Open circuit, short to ground, signal unplausible 1) Ground must be present at pin 41 when selector lever switch is in position P, R (N is is possible due to overlaps). No ground: Check wiring from transmission control unit connector pin 41 to position switch connector D. Wiring o.k. Check position switch as under Test point 13 item 4

Printed in Germany, VI – 1994

Fault, fault code	Possible causes, remedy, notes
Test point 29 **Reverse light relay** Fault code 60	**No diagnosis possible.** Detectable faults: Open circuit/short to ground, short to positive 1) Trigger reverse light relay with Tester 9288 (Drive links). The relay and the reverse lights must switch on and off in two-second intervals. (Acoustical test. Relay is located in Central Electrical System R51). 2) Pull off connector from transmission control unit. Short-circuit pin 25 to ground (pin 7). Does reverse light relay pick up? Transmission control unit faulty 3) Pull off reverse light relay. Check voltage at terminal 30 of relay base. Check connection from transmission control unit connector/pin 25 to relay base/terminal 85. Wiring o.k.: Relay faulty
Test point 30 **Unknown fault code** Fault code XX	Check ground points

Printed in Germany, VI – 1994

37 01 Tiptronic Diagnosis / Troubleshooting

Diagnosis / Troubleshooting

Tiptronic

System G10

Contents

	Page
General Information	37 - 45
Data output with system tester 9288	37 - 47
Country coding	37 - 49
Component layout	37 - 51
Functions of individual components	37 - 52
System description	37 - 55
Connector pin assignment (transmission control unit)	37 - 63
Fault overview	37 - 65

General information

A self-diagnosis feature with fault memory is built into the transmission control unit to allow specific faults within the electronic Tiptronic control to be detected and stored.

Positive potential is permanently connected to the control unit (pin 26) so that detected and stored faults are not deleted when the ignition is switched off.

The "restricted driving program" is activated if terminal 15 (pin 55) should fail. The Tiptronic warning lamp does not light up, however.

Stored faults can be deleted only with the system tester.

Diagnosis cannot be started in the "restricted driving program" and if the diagnosis leads are defective (see page 03 - 3).

Never pull off or push on control unit connectors with the ignition switched on.

Data output with system tester 9288

Tiptronic G10
As of module version 8.0

System texts

```
     TIPTRONIC
System:G10TIPTRONIC
SerNr.:9936181200
```

Menu

```
    Menu
1=DTC memory
2=Drive links
3=Switching inputs>
```

```
<    Menu
1=Actual values
2=Country coding
```

Drive link texts

```
 Drive links
1=Solenoid valve 1
2=Solenoid valve 2
3=Converter clutch>
```

```
<  Drive links
1=Gear display 1-4
2=Reversing relay
3=Shiftlock          >
```

```
<  Drive links
1=Ignition angle
intervention
```

Switching inputs

```
 Switching inputs
1=Kickdown
2=Downshifting
3=Upshifting
```

```
<  Switching inputs
1=Manual program
2=Multi-function sw.
3=Brake light
```

Actual values

```
 Actual values
1=Wheel speed
2=v   (FR)
3=v   (FL)           >
```

```
<  Actual values
1=v  transmission
2=Throttle valve
3=Temperature        >
```

```
<  Actual values
1=Gear
2=Voltage supply
3=Variant coding
```

Country coding

```
 Country coding
ROW WORKSHOP         *
1=Coding
return:              N
```

Country coding

Transmission control units must be coded for the required country version as of the '96 mod. (Tiptronic system G10).

Three country versions are available:
C... ROW (rest of world)
C02 USA
C14 Taiwan
When the control unit is replaced, it must be coded on a country-specific basis.

Connect system tester 9288 and call the Country Coding menu.

```
     Country coding
USA Manufacturer.......*
1=code
back:                  N
```

The coded version and where the control unit was coded are displayed in the first line of the Country Coding menu.

Note

Replacement control units are delivered with USA coded as the country version.

Press button 1 for coding.

The country selection menu appears.

```
1=ROW
2=USA
3=Taiwan
back:                  N
```

In order to code a certain country, press the corresponding button (e.g. button 1 for ROW).

```
    Country coding
ROW    WORKSHOP        *
1=code
back:                  N
```

Component layout

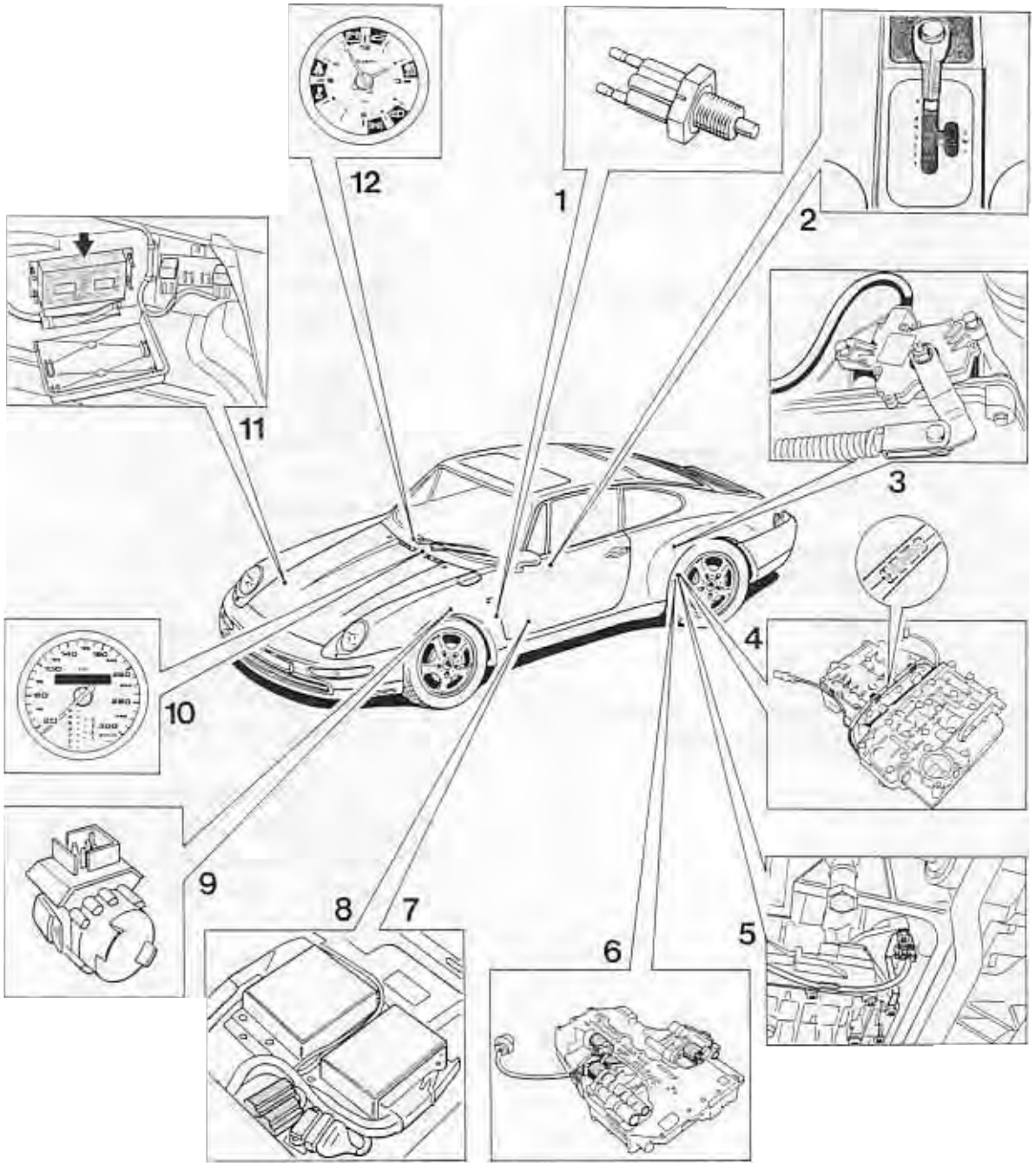

Functions of individual components

1. Stop light switch
Installation position: At brake pedal.
A stop light switch signal must be sent to the transmission control unit to start downshifts before entering a curve (refer to 1 h, page 37 - 59).

2. Selector lever
The selector lever transmits the selector lever position across a bowden cable to the transmission and to the position switch.

2a. Selector lever switch
It includes the manual, upshift, downshift and parking switches.

Manual switch
It connects the transmission control unit to ground in the manual gate in order to enable manual tip shifting.

Upshift switch
It connects the transmission control unit to ground to start an upshift.

Downshift switch
It connects the transmission control unit to ground to start a downshift.

3. Position switch
Installation position: At transmission.
The position switch is operated directly by the selector lever across a bowden cable and transmits the selector lever position to the transmission control unit. It operates the reverse lights and is used to lock the starter when a drive position is engaged.
If this signal is faulty, the system enters the "emergency mode".

4. ATF temperature sender unit
Installation position: The sender is built into the transmission harness. If it is damaged, the entire wiring harness has to be replaced (refer volume 3, page 38 - 111).

The sender controls the modulating pressure of the transmission in accordance with the ATF temperature. This helps to provide comfortable shifting operations across the entire temperature range.
If the ATF temperature reaches excessive levels, the control unit selects a map with minimum power loss and closes the torque converter lockup clutch. Additionally, downshifts are made at higher engine speeds. This reduces slip inside the toruqe converter, allowing the ATF to cool down.

If the actual voltage excceds or remains below the specified signal voltage range, the sender is assumed to be faulty. A 60°C replacement value is then used for the shift operations.

11. Emergency mode warning lamp

The warning lamp in the clock lights up **briefly** when the ignition is switched on. If this lamp comes on while the car is in motion, this is due to a system fault, causing the emergency mode to be selected. This warning lamp also indicates that the electro-hydraulic reverse lock is inoperative (refer to 3c, page 37-61).

12. ABS control unit

Installation position: In luggage compartment (right-hand wheel housing).
The ABS control unit is connected to the transmission control unit. It transmits the speed of the front wheels for the slip monitoring function (see 1d, page 37-59)

11. Emergency mode warning lamp

The warning lamp in the clock lights up **briefly** when the ignition is switched on. If this lamp comes on while the car is in motion, this is due to a system fault, causing the emergency mode to be selected. This warning lamp also indicates that the electro-hydraulic reverse lock is inoperative (refer to 3c, page 37-61).

12. ABS control unit

Installation position: In luggage compartment (right-hand wheel housing).
The ABS control unit is connected to the transmission control unit. It transmits the speed of the front wheels for the slip monitoring function (see 1d, page 37-59)

System description

The Tiptronic transmission is a load-shift planetary transmission that can be shifted either automatically or manually (via a rocker switch).
The transmission is controlled by an electronic transmission control system that selects automatically among five different shift maps (KF1 = map for very comfortable and economical driving, to KF5 = map for very sporting driving).

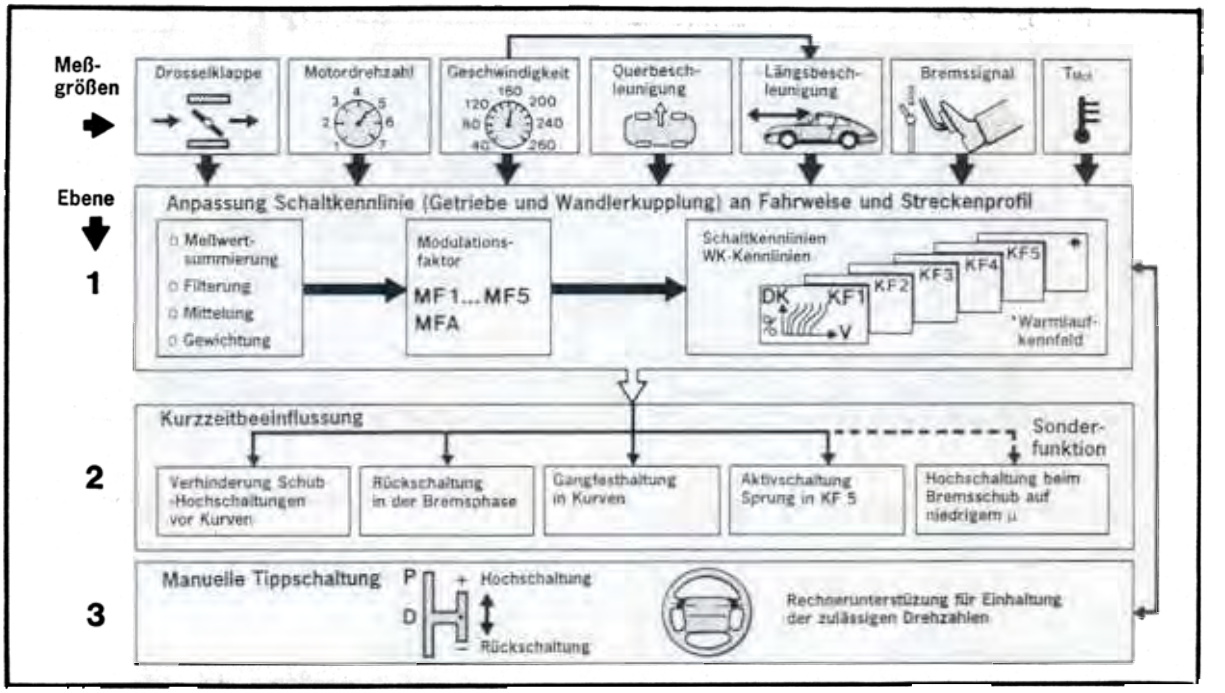

2371-37

Automatic shift strategy

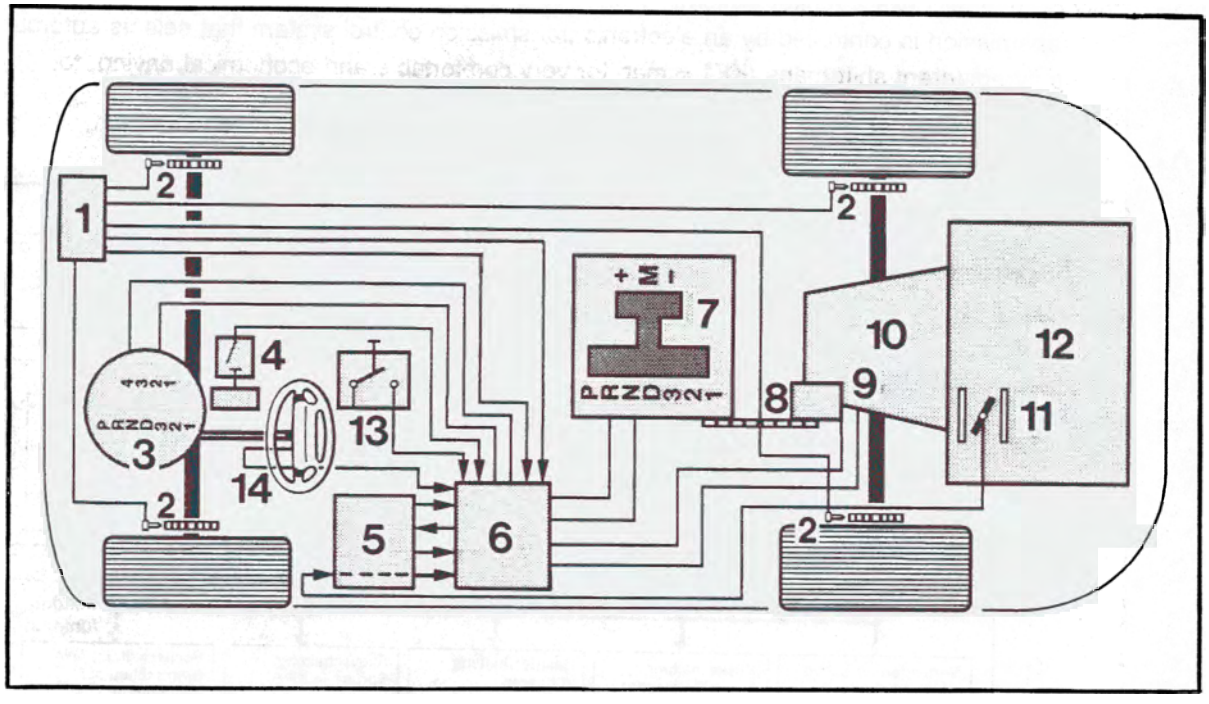

1 – ABS control unit
2 – ABS sensors at wheels
3 – Speedometer
4 – Kickdown switch
5 – DME control unit
6 – Electronic transmission control unit
7 – Selector lever system with two gates
8 – Cable
9 – Multi-function switch
10 – Automatic transmission
11 – Throttle with potentiometer
12 – Engine
13 – Stop light switch
14 – Manual switch on steering wheel

The electronic transmission control unit is the information and command center of the entire system. It compares a multitude of information inputs (measurements) with stored driving and gearshift programs, selects the map that is suited best to the driving mode and sends commands to the transmission to execute or not to execute specific gearshifts.
A short-term function activated by the driver is also available to allow the shift points to be controlled electronically by the driver.

In addition to "standard" shift control, the following programs or special functions are built into the system:

1 Automatic program

a – Adaptive shift curve adpatation
b – Skip into sporting shift map
c – Upshift prevention
d – Slip monitoring
e – Warm-up map
f – Transmission protection at high ATF temperatures
g – Electronic kickdown latching
h – Downshifting during braking (ahead of curves)

2 Manual program

a – Automatic shifts in M program

3 Special functions

a – Shift comfort control (change of ignition timing)
b – Creep function (moving off in 2nd gear)
c – Emergency mode
d – Adaptive pressure control
e – Uphill and downhill detection

1 Automatic program

1a Adaptive shift curve adaptation

The transmission control unit uses the following signals to determine the optimum shift curve.

Measuring parameter	Type of measurement
Throttle position	Potentiometer resistance
Throttle positioning speed	Time for change of resistance at potentiometer
Engine speed	Frequency measurement (from DME)
Vehicle speed	No. of pulses of transmission shaft rotor
Vehicle transverse acceleration	from the difference between the front wheel speeds
Vehicle axial acceleration / deceleration	from the transmission output speed

The above signals and measurement parameters are determined within time intervals of 20...100 mil liseconds and are processed in the control unit.
When these measurements are compared with the stored programs, factors are generated that can be used to enter or shift into one of the five shift maps.
The change from KF1 (very comfortable and economical shifting) to KF5 (very sporting shifting) can be accomplished within a minimum of 60 seconds.
Adaptive shift curve adaptation remains active all the time (including the manual program).

Note

In addition to five shift maps that are determined automatically by the control unit in accordance with the style of driving, the electronic transmission control can also be activated briefly by the driver (short-term input).

1b Active gear shift (Skip into sporting shift map KF5)

Spontaneous, abrupt acceleration results in an immediate transition from the currently active shifting characteristic with the maximum possible power output (KF5), which leads to downshifting. When the acceleration process is completed, the previously used shift map is selected again.

1c Upshift prevention

Prevents thrust upshifts ahead of bends

If the driver releases the accelerator rapidly - ahead of a curve for example - (throttle valve positioning speed), the control unit detects this driving situation and prevents upshifting.

Printed in Germany 17.1000

Shift prevention in curves

When certain lateral acceleration limits beyond which upshifting must never take place are reached, the transmission is kept in the current gear despite any accelerator movement.

1d Slip monitoring

The engine braking effect during coasting, especially in the lower gears and on slippery surfaces, may cause the driven wheels to slip or even to lock. This status, i.e. the wheel speed difference between front and rear wheels, is detected by the transmission control unit (Using input from the ABS control unit, this unit constantly compares the speed of the driven wheels to the speed of the right-hand front wheel). To increase vehicle stability, the next higher gear is then selected immediately and the torque converter lockup clutch is opened.

1e Warm-up map

To ensure that the catalytic converter reaches its operating temperature as fast as possible, the transmission selects a shift map with higher shift speeds within the automatic program during the engine warm-up phase.
Furthermore, the vehicle moves off in 1st gear when the engine is cold.
The control signal is computed in the DME control unit and is sent to the transmission control unit.

1f Transmission protection at high ATF temperatures

To avoid excessive loads on transmission components due to overheating, the transmission control unit selects a shift map with minimum power loss within a specified temperature range and closes the torque converter lockup clutch.
As an additional protective measure, the transmission shifts down at higher engine speeds.

1g Electronic kickdown latching

The kickdown latching function allows the kickdown shift points (= max. rpm) to be used even at smaller throttle angles. The function is started when the kickdown switch is actuated and the accelerator is released rapidly (e.g. interrupted kickdown overtaking).
This condition is detected and processed by the transmission control unit. The kickdown shift speeds remain active until the accelerator is released to 50% of the full-throttle position.

1h Downshifting during braking (ahead of bends)

Depending on actuation of the brakes, brake deceleration, transverse acceleration and vehicle speed, downshifts are executed during braking at higher speeds than during normal vehicle deceleration. In the braking phase, downshifts into the next lower gear are made ahead of the curve. This allows the braking effect of the engine to be used and load on the service brakes to be reduced.

2 Manual program

2a Automatic shifts

The shift operations can also be influenced manually. For this purpose, move selector lever from the "D" position into the manual shift plane to the right. Upshifting is performed by briefly pushing the selector lever to the front (+), and downshifting by briefly pulling the selector lever to the rear (-) (also possible via rocker switches in the steering wheel). The transmission control unit monitors the admissible rpm limits in this program as well. If the rpm limits stored in the computer are exceeded or not reached in the individual gears, automatic upshifts or downshifts are made even if the selector lever remains in the manual gate.
Automatic downshifts are only made down to 2nd gear. If it is desired to move off in 1st gear (e.g. after stopping at a red light), 1st gear must be engaged by actuating the rocker switch.
The kickdown feature cannot be used since it is not activated in this program.
The selected gear is displayed in the speedometer.
If the manual selection feature fails, the electronic transmission control unit automatically shifts to the automatic program, and the "D" position is displayed on the selector lever position display.

3 Special functions

3a Shift comfort control (Change of ignition timing)

With this type of control, the transmission control unit is connected to the DME control unit. At the shift point, the engine control unit reacts by retarding the ignition timing. This reduces engine torque during the shift process, thus increasing shift comfort and ensuring a long service life of the shift actuators.
If the signal is faulty, "emergency mode" is selected.

3b Creep function (moving off in 2nd gear)

With this function, the vehicle moves off in shift position "D" and at a throttle angle < 35% in the automatic program and in 2nd gear in the manual program.
If the driver wants to move off in 1st gear, the throttle angle must be > 35% in the "D" shift position or position "3", "2" or "1" has to be preselected. In the manual program, 1st gear has to be selected to be activated (also refer to 1e, page 37 - 59).

Note

The vehicle moves off in 1st gear when the engine is cold.

3c Emergency mode

The electronic transmission control unit switches off the solenoid valves when specific signals or circuits become faulty and thus prevents gearshifts. If this occurs while the vehicle is in motion, 4th gear is selected regardless of the selector lever position and remains activated until the vehicle comes to a stop. When restarting the vehicle or after selecting reverse gear once, only third gear remains active.
A warning lamp in the clock displays this system fault and indicates that the electronic-hydraulic reverse interlock is inoperative. Take care never to move the shift lever to the "R" position while the vehicle is in motion.

3d Adaptive pressure control

Adaptive pressure control monitors the hydraulic shift pressures (modulating pressure) and adapts them to the transmission and driving status. This ensures good shift comfort throughout and increased service life of the shift actuators.

3e Uphill and downhill detection

In addition to using driving mode data when selecting the shift mode map, the intelligent shift program also takes the driving resistance into account as resistance changes make themselves felt especially on gradients and downhill slopes.
This detection feature causes the system to shift into the map that provides the optimum gear for that particular gradient. This reduces gearshift frequency, allowing the engine braking effect to be used to better effect when driving downhill in a lower gear and therefore requiring less frequent braking.

Tiptronic connector pin assignment

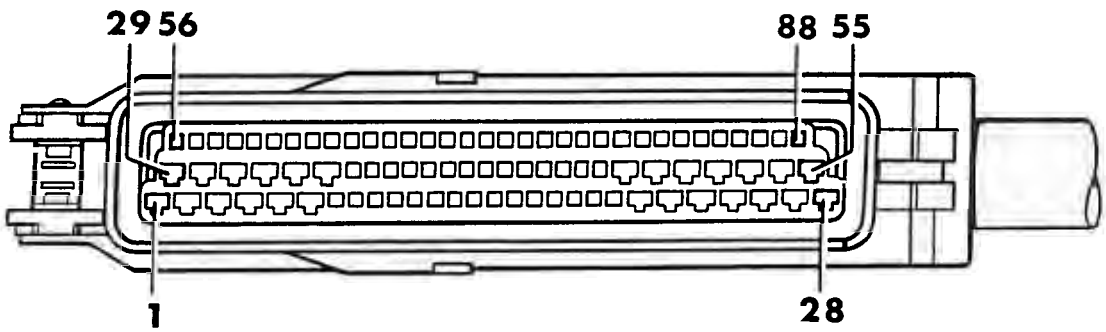

2378-37

1 - Relay, reverse light
2 - Shiftlock
3 - Not used
4 - Not used
5 - Solenoid valve/pressure regulator
6 - Power ground
7 - Throttle-valve signal, engine temperature
8 - Switch position Y
9 - Redundancy
10 - Brake light
11 - Not used
12 - Pin coding 1 (3, 6 1)
13 - Input signal, manual program
14 - Output speed
15 - Shield, output speed
16 - Not used
17 - OBDII fault lamp
18 - Kickdown
19 - Not used
20 - Engine intervention
21 - Sensor ground
22 - ATF temperature
23 - Not used
24 - Fault lamp
25 - Display, 2nd gear
26 - Terminal 30
27 - Display, 1st gear
28 - Electronics ground
29 - Not used
30 - Solenoid valve 1
31 - K wire
32 - Solenoid valve, torque converter lockup clutch
33 - Solenoid valve 2
34 - Not used
35 - Load signal (TR)
36 - Switch position X
37 - Switch position Z
38 - Upshifting
39 - Front-wheel speed, right
40 - Front-wheel speed, left
41 - L wire
42 - Output speed +
43 - Engine speed (TN)
44 - Not used
45 - Not used
46 - Display, 3rd gear
47 - Downshifting
48 - Not used
49 - Not used
50 - Display, 4th gear
51 - Display, manual program

52 - Not used
53 - Plus solenoid valve, pressure regulator
54 - Not used
55 - Terminal 15 E

Note
Pins 56 to 88 are not assigned.

Test point	Fault code	Title	Causes	Page
1	11	Voltage <ECM control unit	Restricted driving	37 - 67
2	21	Rpm signal < ECM control unit	Restricted driving program	37 - 67
3	22	Load signal <ECM control unit	Hard shifting	37 - 68
4	24	Ignition-angle intervention (plus)	Hard shifting	37 - 68
5	25	Throttle-valve signal <ECM control unit Read out DTC memory	Default throttle valve value 9% No kickdown	37 - 70
6	31	Solenoid valve 1	Restricted driving program	31 - 71
7	32	Solenoid valve 2	Restricted driving program	37 - 72
8	33	Solenoid valve, torque converter clutch	Restricted driving program	37 - 73
9	34	Pressure regulator	Restricted driving program	37 - 74
10	35	Multi-function switch	Restricted driving program	37 - 74
11	36	Speed sensor Transmission	Restricted driving program	37 - 76
12	37	Temperature sensor, transmission	Default value 60°C	37 - 77
13	38	Multi-function switch (start)	Restricted driving program	37 - 78
14	42	Control unit defective (checksum)	Restricted driving program	37 - 78
15	43	Control unit defective (relay)	Restricted driving program	37 - 79

Test point	Fault code	Title	Causes	Page
16	44	Control unit defective (watchdog)	Restricted driving program	37 - 79
17	45	Rpm limiter	Restricted driving program	37 - 79
18	46	Downshift protection	Restricted driving program	37 - 79
19	49	Control unit defective (EEPROM)	No reaction	37 - 79
20	51	Manual program switch	No manual program	37 - 80
21	53	Switch, kickdown	No kickdown	37 - 80
22	55	Speed signal (FR)	No manual program	37 - 80
23	56	Instrument cluster control	No reaction	37 - 81
24	59	Switch, R position	Restricted driving program	37 - 82
25	62	Speed signal (FL)	No manual program	37 - 82
26	63	Shiftlock P/N ground	No reaction	37 - 84
27	71	Gear monitoring 1st gear	No reaction	37 - 84
28	72	Gear monitoring 2nd gear	No reaction	37 - 84
29	73	Gear monitoring 3rd gear	No reaction	37 - 84
30	74	Gear monitoring 4th gear	No reaction	37 - 84

Fault, fault code	Possible causes, remedy, notes

Test point 1

Control unit voltage
(Fault code 11 Signal unplausible)

Emergency operation, no display

Possible faults: Open circuit, short to positive, short to ground, loose contact, voltage outside of valid range

1) Tiptronic warning lamp does not light when ignition is switched off

Check fuse No. 27

Measure voltage at fuse

No voltage: Check wire to relay R11 or operation of relay

Measure voltage at transmission control unit connector pin 55

No voltage: Check wiring according to wiring diagram

2) Voltage outside of valid range

Fault code 11 Signal unplausible
- Low voltage? U < 11V
  Check battery, alternator, regulator!
- O.k.? Check for contact resistance at junctions, deformation and corrosion of contacts
- Excessive voltage? Check power supply of vehicle (alternator, regulator) U > 14.5 V with engine running

Test point 2

Rpm signal from DME
Fault code 21

Tiptronic warning lamp comes on, transmission is in emergency mode
Possible faults: Open circuit/short to ground, short to positive, loose contact

1) Signal check

Check signal with Tester 9288. (Engine operation)

Check signal with oscilloscope at transmission control unit connector pin 43.
If signal o.k.: Transmission control unit faulty

Signal shape

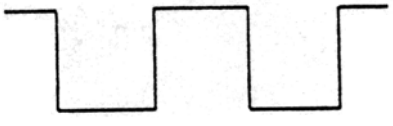

Fault, fault code	Possible causes, remedy, notes
	2) Open circuit, short to ground, short to positive Check wiring to wiring diagram. Check transmission control unit connector pin 43 to DME connector pin 6 for continuity, short to ground and short to positive. (Ground at transmission control unit = pin 28, positive at transmission control unit = pin 55) Connections o.k.: DME control unit faulty
Test point 3 **Load signal from DME** Fault code 22	**Tiptronic warning lamp comes on, transmission is in emergency mode** Possible faults: Open circuit, short to ground, short to positive, loose contact 1) Signal check Check signal with Tester 9288 (injection time) with engine running Check signal with oscilloscope at transmission control unit connector pin 35. If signal o.k.: Transmission control unit faulty Signal shape: ti signal 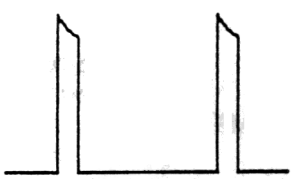
Test point 4 **Change of ignition timing** Fault code 24	**Tiptronic warning lamp comes on, transmission is in emergency mode** Possible faults: Open circuit, short to ground, short to positive 1) Check operation with Tester 9288 (drive link test) Idle speed must drop. If it does not, check as follows:

Fault, fault code	Possible causes, remedy, notes

2) Check voltage drop

- Remove cover of plugged-in connector X4/1
- Switch on ignition
- Measure voltage at pin 7. Specification: approx. 5 Volt
- Trigger signal with Tester. Voltage must drop
- Operation o.k.: Check wiring to DME control unit (Connector X 4/1 pin 7 to DME control unit pin 51)
- Wiring o.k.: DME control unit faulty
- Operation not o.k.: Check wiring to transmission control unit (connector X4/1 pin 7 to transmission control unit connector pin 20)

Wiring o.k.: Transmission control unit faulty

Note: Check engine to body ground strap

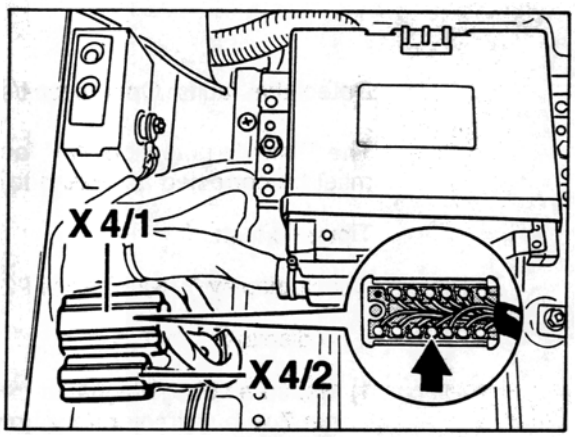

Connector X 4/1 (below left seat)

Fault, fault code	Possible causes, remedy, notes

Test point 5

Throttle potentiometer
Fault code 25

Tiptronic warning lamp comes on, transmission is in emergency mode

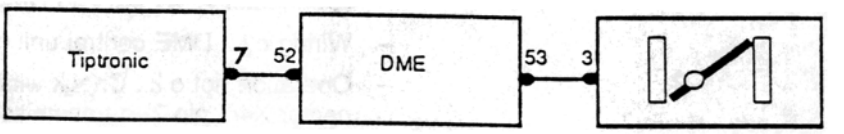

2377-37

Detectable faults: Open circuit/short to ground, short to positive

The "Throttle potentiometer" fault is also stored in the DME, the fault must be corrected according to the DME test plan.

Tiptronic test:

Check display % with Tester 9288 (Actual values menu)

If no display:

1) Measure voltage signal at transmission control unit connector pin 7 with voltmeter.Vary from 1 V at idle to approx. 10 V at full throttle (Ignition on)

If no voltage:

2) Check wiring according to wiring diagram.
Check transmission control unit connector pin 7 to DME pin 52 for continuity, short to ground and short to positive (ground at transmission control unit connector = pin 28, positive at trans mission control unit connector = pin 55)

If continuity o.k. = DME control unit faulty

If voltage o.k. = Transmission control unit faulty

Fault, fault code	Possible causes, remedy, notes

Test point 6

Solenoid valve 1
Fault code 31

Tiptronic warning lamp comes on, transmission is in emergency mode
Possible faults: Open circuit, short to ground, short to positive

1) Check operation with Tester 9288 (Drive link test)

- Acoustical test
  Triggering cycle of solenoids is audible as a clicking noise near the transmission
2) Pull connector off transmission control unit.

a) Measure resistance between pin 30 and pin 53. Specification: 34 Ohms, tolerance 10 %

b) Check that pins 30 and 53 are free from shorts to ground
- Check o.k.: Transmission control unit faulty

3) Also pull off connector at transmission

Check wiring (transmission control unit connector pin 30 to transmission connector pin H and transmission control unit connector pin 53 to transmission connector pin M).

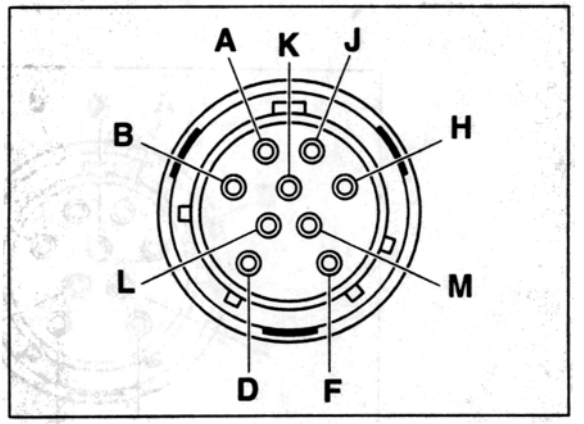

Wiring o.k.: Solenoid valve faulty

Note: If a "sporadic solenoid fault" occurs, check connections for pushed-back pins.

Fault, fault code	Possible causes, remedy, notes

Test point 7

Solenoid valve 2
Fault code 32

Tiptronic warning lamp comes on, transmission is in emergency mode
Possible faults: Open circuit, short to ground, short to positive

1) Check operation with Tester 9288 (Drive link test)

– Acoustical test
Triggering cycle of solenoids is audible as a clicking noise near the transmission.

2) Pull off connector at transmission control unit

a) Measure resistance between pin 33 and pin 53.
Specification: 34 Ohms, tolerance 10 %

b) Check that pins 33 and 53 are free from shorts to ground.

Check o.k.: Transmission control unit faulty

3) Also pull off connector from transmission.

Check wiring (transmission control unit connector pin 33 to transmission connector pin K and transmission control unit connector pin 53 to transmission connector pin M).

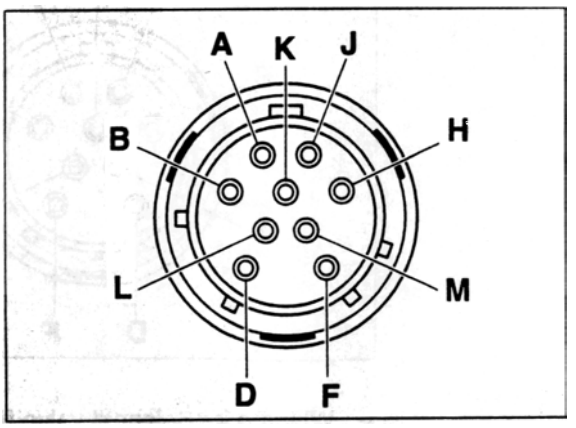

Wiring o.k.: Solenoid valve faulty

Fault, fault code	Possible causes, remedy, notes

Test point 8

Solenoid valve torque conv. clutch
Fault code 33

Tiptronic warning lamp comes on, transmission is in emergency mode
Possible faults: Open circuit, short to ground, short to positive

1) Check operation with Tester 9288 (Drive link test)

   Acoustical test
   Triggering cycle of solenoids is audible as a clicking noise near the transmission.

2) Pull off connector from transmission control unit

a) Measure resistance between pin 32 and pin 53
   Specification: 34 Ohms, tolerance 10 %.

b) Check that pins 32 and 53 are free from shorts to ground

   Check o.k.: Transmission control unit faulty

3) Also pull off connector from transmission

   Check wiring (transmission control unit connector pin 32 to transmission connector pin L and transmission control unit connector pin 53 to transmission connector pin M)

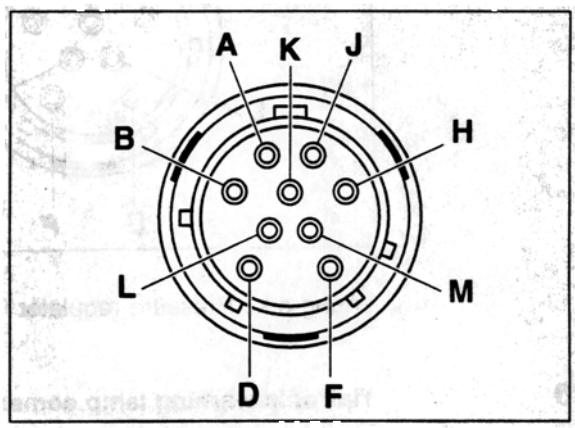

Wiring o.k.: Solenoid valve faulty

Fault, fault code	Possible causes, remedy, notes

Test point 12

Pressure regulator
Fault code 34

Tiptronic warning lamp comes on, transmission is in emergency mode
Possible faults: Open circuit, short to ground, short to positive

1) Pull off connector from transmission control unit

a) Measure resistance between pin 5 and pin 53
Specification: 6 Ohms ± 2 Ohms

b) Check that pins 5 and 53 are free from shorts to ground

– Check o.k.: Transmission control unit faulty

2) Also pull off connector from transmission

Check wiring (Transmission control unit connector pin 5 to transmission connector pin B and transmission control unit connector pin 53 to transmission connector pin M)

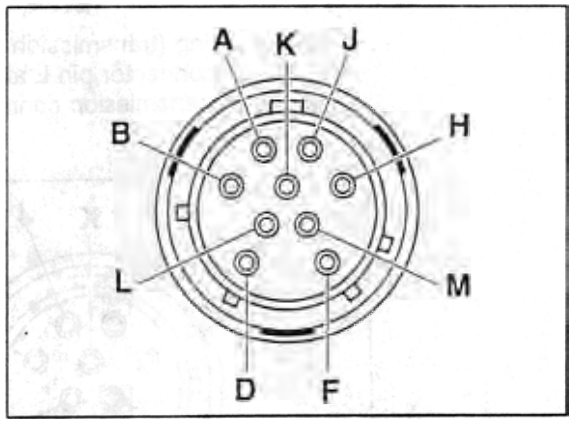

Wiring o.k.: Pressure regulator faulty

Test point 10

Multi-function switch
Fault code 35

Tiptronic warning lamp comes on, transmission is in emergency mode
Possible faults: Open circuit, short to ground, short to positive

1) Check operation with Tester 9288

Adjustment of Tester 9288:
Menu: „Input signals“ = Selector lever/Manual program

Fault, fault code	Possible causes, remedy, notes

Shift through selector lever positions P, R, N, D, 3, 2, 1 one after another.

Compare: Selector lever position
Position indicator in speedometer
Position indicator on Tester 9288

Caution:

Due to its design, the display on Tester 9288 appears with a certain delay - shift through positions sufficiently slowly.

No matching: Check wiring according to wiring diagram, check position switch with/without wiring

2) Pull off transmission control unit connector

- Use ohmmeter to check transmission control unit connector pin 28 for ground
- If no ground is present, refer to wiring diagram MP IV

3) Measure position switch according to table 1

Ohmmeter display – = No continuity
0 = Continuity

Table 1

	Pin 8	Pin 37	Pin 36	Pin 9 → to ground
P	–	–	0	0
R	0	–	0	0
N	0	–	–	–
D	0	0	–	–
3	0	0	0	–
2	–	0	0	–
1	–	0	–	

Measurements o.k.: Control unit faulty

Measurements present, but incorrect sequence?

Check cable from selector lever switch to position switch

Is cable adjusted correctly?

Repair instructions: „Adjust position switch“

Open circuit, short to ground, short to positive?

Fault, fault code	Possible causes, remedy, notes

4) Check position switch without connections
- Pull connector off the switch
- Check switch for continuity acc. to Table 2

Ohmmeter display
– = No continuity
0 = Continuity

Table 2

	Pin H-B	H-C	H-A	F-G	E-D
P	–	–	0	0	0
R	0	–	0	–	0
N	0	–	–	0	–
D	0	0	–	–	–
3	0	0	0	–	–
2	–	0	0	–	–
1	–	0	–	–	–

- Fault? Replace Multi-function switch.

Test point 11

Speed sensor (Transmission)
The sensor transmits the transmission speed. The transmission control unit compares it to the wheel speed.
Fault code 36

Tiptronic warning lamp comes on, transmission is in emergency mode
Possible faults: Open circuit, short to ground, short to positive, loose contact

Note:

Check with Tester 9288 (Actual values). Store fault as of engine speed = 2,800 rpm

1) Pull off connector from transmission control unit

a) Measure resistance between pin 14 and pin 42.
Specification: approx. 350 Ohms

b) Check that pin 14 and pin 42 are free from shorts to ground.

Check o.k.: Transmission control unit faulty

Fault, fault code	Possible causes, remedy, notes

2) Also pull connector off the transmission.

Check continuity: Transmission control unit connector pin 14 to pin F

Pin 42 to pin A

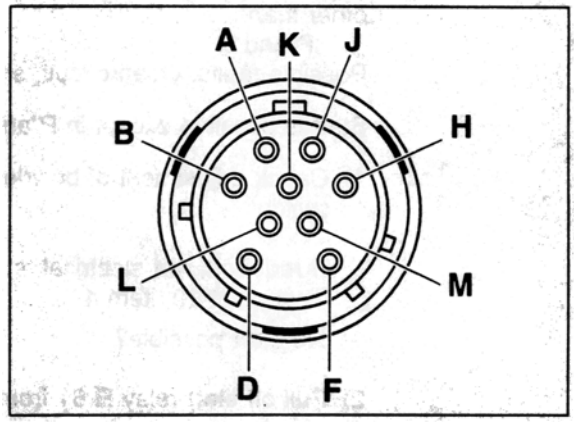

Short to ground from pin 14 and pin 42 to pin 28 (ground)

Pin 14 and pin 42 to pin 15 (screening)

Short to positive from pin 14 and pin 42 to pin 55 (positive)

Test point 12

Transmission temperature sensor

Fault code 37

If a fault occurs, a replacement value 60° C is assumed.

Possible faults: Open circuit, short to ground, short to positive, corrupted signal

Note:

Existing faults are stored only when the engine is running.

1) Check temperature with Tester 9288 (Actual values)

2) Pull off connector from transmission control unit

Measure resistance between pin 21 and pin 22

Specification: approx. 1,00 kΩ/20° C
1,15 kΩ/40° C
1,30 kΩ/60° C

Check wiring.

Check o.k.: Transmission control unit faulty

Fault, fault code	Possible causes, remedy, notes
Test point 13 **Multi-function switch (start)** Fault code 38	**Tiptronic warning lamp comes on, transmission is in emergency mode** Specification: Engine can be started in P or N positions only Actual status: Engine can also be started in selector lever positions other than P and N Possible faults: Open circuit, short to ground, short to positive Start is possible except in P and N 1) Check adjustment of bowden cable to position switch If required, run electrical tst as described under Test point 10, item 4 No start possible? 2) Pull off start relay R 61 from Central Electrical System – Ground must be present at relay base terminal 85 when the selector lever is set to P and N. – Ground is present: Check start relay and ignition switch with related wiring – No ground: Check position switch and wiring to start relay 3) Check position switch as described under Test point 10, item 4 Position switch o.k. Check continuity: a) Position switch pin G to start relay R61. b) Junction X4/1 pin 6 to DME connector pin 42 Wiring o.k. Transmission-related starting requirements are met.
Test point 14 **Control unit faulty** (Checksum) Fault code 42	**Tiptronic warning lamp comes on, transmission is in emergency mode** Replace control unit

Fault, fault code	Possible causes, remedy, notes
Test point 15 **Control unit faulty** (Relais) Fault code 43	**Tiptronic warning lamp comes on, transmission is in emergency mode** Replace control unit
Test point 16 **Control unit faulty** (Watchdog) Fault code 44	**Tiptronic warning lamp comes on, transmission is in emergency mode** Replace control unit
Test point 17 **Downshift fault** Fault code 45	**Tiptronic rning lamp comes on, transmission is in emergency mode** Possible faults: Corrupted rpm signal from output or engine, or incorrect output/engine rpm ratio Faulty transmission (Clutch slips) 1) Check inductive rpm sensor, Test point 11 2) Check transmission
Test point 18 Rev.-limiter Fault code 46	**Tiptronic warning lamp comes on, transmission is in emergency mode** Faulty transmission (Clutch slips) 1) Check inductive rpm sensor, Test point 11 2) Check transmission
Test point 19 **Control unit faulty (EEPROM)** Fault code 49	**Replace control unit**

Fault, fault code	Possible causes, remedy, notes
Test point 20 **Manual program switch** Fault code 51	**No manual program available** Detectable faults: Short to ground 1) Check operation with Tester 9288 (Input signals) 2) Pull off connector from transmission control unit Check connection from transmission control unit connector pin 13 to selector lever switch/pin 3 Connection o.k. Replace selector lever switch plate Switch and connection o.k.: Transmission control unit faulty
Test point 21 **Kick-down switch** Fault code 53	**No kickdown shift** Detectable faults: Short to ground 1a) Acoustical switch test b) Check operation with Tester 9288 (Input signals test) 2) Remove and check kickdown switch (Note: Adjust switch after replacement) 3) Pull off connector from transmission control unit. Check connection from transmission control unit connector pin 18 to kickdown switch pin 2. Check o.k.: Transmission control unit faulty
Test point 22 **Speed signal (FR)** Fault code 55	**Upshifting is not prevented, no manual program** Detectable faults: Open circuit/short to ground/short to positive 1) Signal comes from ABS. ABS o.k.? 2) Check signal with Tester 9288, raising the vehicle and rotating right-hand front wheel manually.

Fault, fault code	Possible causes, remedy, notes

3) Check wiring according to wiring diagram

Check continuity: Pin 39/transmission control unit connector to ABS control unit connector pin 42

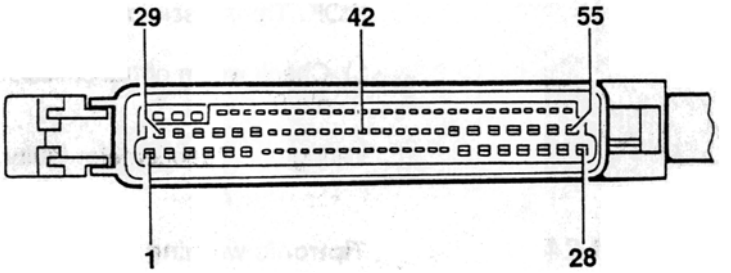

Short to ground: Pin 39 to pin 28/transmission control unit connector (ground)

Short to positive: Pin 39 to pin 55/transmission control unit connector (positive)

4) Check signal with oscilloscope (transmission control unit connector pin 38) (ignition on)

Speed signal

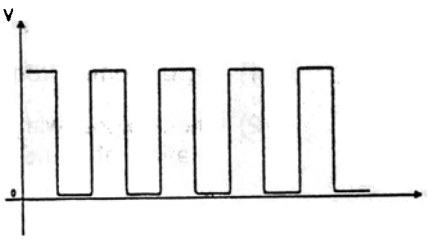

Signal present: Transmission control unit faulty

No signal: ABS faulty

Test point 23

Instrument cluster

Activation

Fault code 56

No diagnosis possible.

Detectable faults: Open circuit/short to ground, short to positive

1) Switch the manual program on and off with the engine running.

The position display "D" must go out when the manual range is engaged.

Fault, fault code	Possible causes, remedy, notes
	2) Pull off the transmission control unit connector and connect pin 51 to ground. The position display/automatic mode must go out when the engine is not running. If OK: Transmissio control unit connector is defective. 3) Check wiring of transmission control unit pin 51 to speedometer pin 9. Wiring o.k. Speedometer faulty
Test point 24 **R-position switch** Fault code 59	**Tiptronic warning lamp comes on, transmission is in emergency mode** Possible faults: Open circuit, short to ground, signal unplausible 1) Ground must be present at pin 9 when selector lever switch is in position P, R (N is is possible due to overlaps). No ground: Check wiring from transmission control unit connector pin 41 to position switch connector D. Wiring o.k. Check position switch as under Test point 10 item 4
Test point 25 **Speed signal 1 of ABS** (front left-hand) Fault code 62	**Upshifting is not prevented, no manual program** Detectable faults: Open circuit/short to ground/short to positive 1) Signal comes from ABS. ABS o.k.? 2) Check signal with Tester 9288, raising the vehicle and rotating left-hand front wheel manually.

Fault, fault code	Possible causes, remedy, notes

3) Check wiring according to wiring diagram

Check continuity: Pin 40/transmission control unit connector to ABS control unit connector pin 9

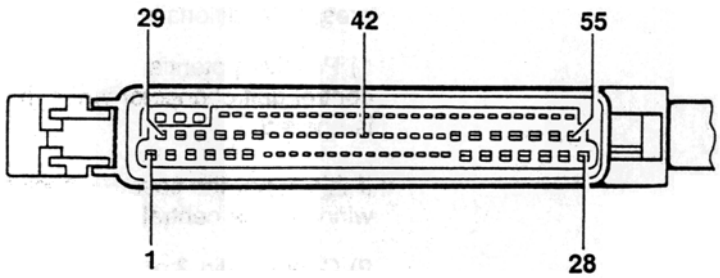

Short to ground: Pin 40 to pin 28/transmission control unit connector (ground)

Short to positive: Pin 40 to pin 55/transmission control unit connector (positive)

4) Check signal with oscilloscope (transmission control unit connector pin 40) (ignition on)

Speed signal

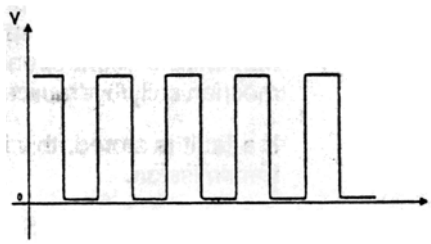

Signal present: Transmission control unit faulty

No signal: ABS faulty

Fault, DTC	Possible causes, remedy, notes
Test point 26 **Shiftlock P/N** Fault code 63	**Fault possibilities: Discontinuity, short circuit to ground, short circuit to plus** **Note** When the ignition is switched on, a drive position can be selected from selector lever position P or N only when the brake pedal is pressed additionally. 1) Positive potential must be present at pin 10 of the transmission control unit connector when the ignition is switched on and the brake is applied. If this is not the case = Check fuse 19, brake light switch and the wiring of the central electric system. 2) Connect pin 2 of the transmission control unit connector to ground. The solenoid should operate (the activating pulse can be heard near the selector lever operating mechanism). If this is not the case = Check fuse 27 and wiring in accordance with the wiring diagram If fuse 27 and wiring are OK = Solenoid defective. 3) If points 1 and 2 are OK = Control unit defective.
Test point 27/28/29/30 **Gear monitoring** **1st ... 4th gear** Fault code 71 ... 74	**Fault possibility: Signal implausible** **Note** The gear monitoring function for 1st ... 4th gear monitors the ratio of engine speed/output speed. In the event of setpoint deviations, the transmission control unit detects whether shifting was performed mechanically/hydraulically. If a fault is stored, this indicates a mechanical/hydraulic fault in the transmission. 1) Is Fault code 36 (Speed sensor) stored? If yes = Remedy the fault in accordance with test point 11. 2) If Fault code 36 is **not** stored = Check transmission

45 02 Diagnosis / Troubleshooting Anti-Lock System

Diagnosis / Troubleshooting

Anti-Lock System

System ABS 5 and System ABS 5 / ABD

Contents

	Page
ABS 5	
Important information	45 - 3
System description	45 - 4
Component layout	45 - 8
Function of individual components	45 - 9
Tools	45 - 11
Control unit connector pin assignment	45 - 12
ABS 5 menus (Overview of available menus)	45 - 14
Fault memory (Overview of available fault displays)	45 - 15
Fault overview / Troubleshooting (Diagnostics / Test plan)	45 - 17
Drive links (Drive links diagnostics and test plan)	45 - 34
Actual values (Actual values check)	45 - 37
Static test	45 - 39
System check	45 - 40
ABS 5 / ABD	
Important information	45 - 3
System description	45 - 6
Component layout	45 - 8
Function of individual components	45 - 9
Tools	45 - 11
Control unit connector pin assignment	45 - 12
ABS 5 / ABD menus (Overview of available menus)	45 - 14
Fault memory (Overview of available fault displays)	45 - 15
Fault overview / Troubleshooting (Diagnostics / Test plan)	45 - 17
Drive links (Drive link diagnostics and test plan)	45 - 34
Actual values (Actual values check)	45 - 37
Static test	45 - 39
System check	45 - 40
Bleeding	45 - 45

Important information on ABS 5 and ABS 5 / ABD

General

The Porsche 911 Carrera (993) is available as standard with ABS 5 (5th generation) or, on option (M No.) with ABS 5 / ABD.
ABD = **A**utomatic **B**rake **D**ifferential.

System Tester 9288 is used for diagnostic operations and system testing of **both** systems.

The pulse wheels on the front axle (tensioning discs) and the pulse rings on the rear axle have a total of 48 teeth. The versions on the 911 Carrera 2/4 (964) had 45 teeth. This difference should
be observed when ordering spare parts to avoid confusion.

The brake pipes on the hydraulic unit and on the adapter have different threads (M 12 x 1 and M 10 x 1).
The risk of accidentally interchanging the brake pipes is thus avoided or reduced considerably.
The adapter is located on the left-hand upper spare wheel well.

Differences between ABS 5 and ABS 5 / ABD

ABS 5 = **3-channel system**
(For schematic diagram, see system description on page 45 - 5).

ABS 5 / ABD = **4-channel system**
(For schematic diagram, see system description on page 45 - 7).

The major **differences** between ABS 5 and ABS 5 / ABD **are:**

- Proportioning valve on hydraulic unit:
  ABS 5 = **1** ea.
  ABS 5 / ABD = **2** ea.
- Number of brake pipes connected to adapter (in upper left area of spare wheel well):
  ABS 5 = **3** brake pipes.
  ABS 5 / ABD = **4** brake pipes.
- **ABD** warning lamp and **ABD** operation lamp (information lamp) of vehicles fitted with **ABS 5 / ABD**. These lamps come on when the ignition is switched on (lamp monitor).
  Those lamps are **not used** in the instrument cluster of vehicles fitted with **ABS 5.**

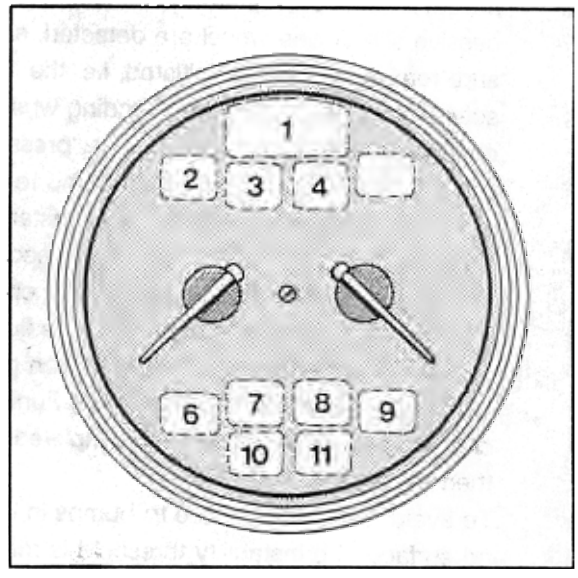

2 - ABD information lamp
3 - ABD warning lamp

ABS 5 system description (3-channel system)

Note

Operation, installation space requirements and weight of the ABS 5 have been optimized over the ABS 2 system. For a schematic diagram of ABS 5, refer to page 45 - 5.

ABS operation

The ABS control unit receives the stop light switch signal and the AC signals supplied by four speed sensors. Two microprocessors then convert these signals independently into corresponding digital wheel speed signals. The wheel speed signals are used to calculate wheel slip (nearly proportional to the calculated vehicle reference speed).

If both a vehicle deceleration condition and excessive slip at one wheel are detected, a pressure retaining period is initiated, i.e. the inlet solenoid valve on the corresponding wheel is closed in order to avoid any further pressure buildup. If the wheel continues to tend to lock even though the pressure is held constant, the pressure in the wheel cylinder is reduced. For this purpose, the outlet solenoid valve opens and the return pump returns the brake fluid to the master cylinder (pressure reduction phase) until the wheel starts rotating again. Further cycles adapted to the cycle just completed are then initiated.
To avoid faulty control due to bumps in the road surface, the instability threshold is made more insensitive as a function of the road surface condition.

This control design offers the following advantages over the ABS 2 generation:

- Reduced braking distance when braking on uneven road surfaces
- Improved control quality, felt by driver as equal deceleration during ABS braking operations
- Improved pedal feedback comfort thanks to finer tuning of pressure pulse control.

This function, i.e. the input signals, is constantly monitored. If a fault is detected, the control unit switches the ABS feature off, activates the ABS warning lamp and stores the fault in a non-volatile memory in the control unit.
As an additional measure, a test program is invoked whenever a speed of 6 km/h is exceeded after starting the vehicle. This program triggers the solenoids and the pump motor electrically and checks them. If a fault is detected, the control unit switches off the ABS function, the ABS warning lamp lights up and the fault is stored.

For a functional description of the individual components, see page 45 - 9

Schematic diagram - ABS 5

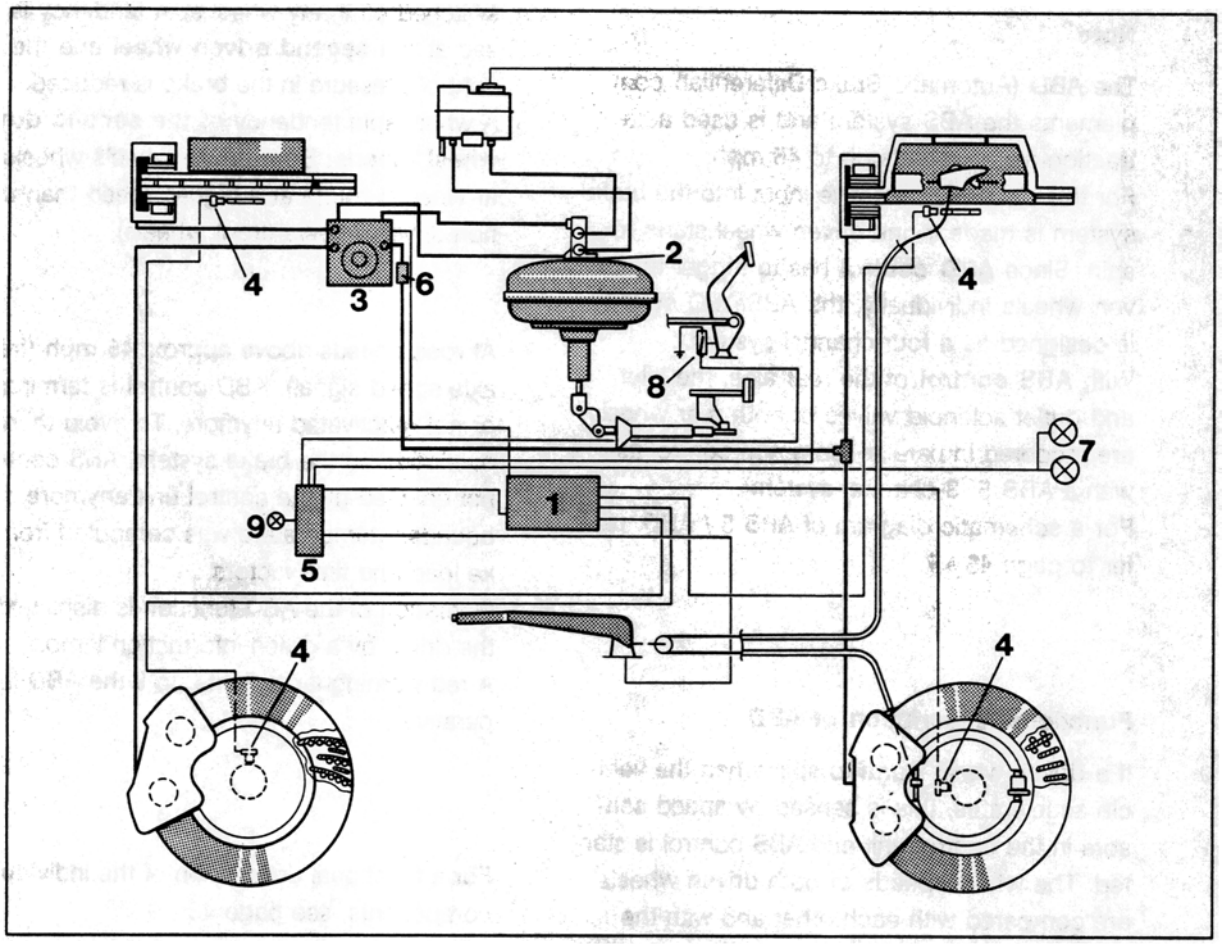

153

1 - ABS control unit

2 - Tandem brake master cylinder

3 - ABS hydraulic unit
(**3** hydraulic outputs)

4 - ABS sensors

5 - Central Information System

6 - Proportioning valve (**1x**)

7 - Brake light

8 - Stop light switch

9 - ABS warning lamp

System description ABS 5 / ABD (4-channel system)

Note

The ABD (Automatic Brake Differential) complements the ABS system and is used as a traction aid at speeds up to 45 mph.
For this purpose, an active input into the brake system is made if one driven wheel starts to spin. Since **ABD control** has to trigger the driven wheels individually, the ABS/ABD system is designed as a four-channel system.
With **ABS control** of the rear axle, the inlet and outlet solenoid valves of both rear wheels are triggered in parallel (common control as with a ABS 5 3-channel system).
For a schematic diagram of ABS 5 / ABD, refer to page 45 - 7.

Functional description of ABD

If a driven wheel starts to spin when the vehicle accelerates, this is sensed by speed sensors in the control unit and ABS control is started. The wheel speeds of both driven wheels are compared with each other and with the speeds of the non-driven wheels. If a specified wheel speed difference is exceeded, a brake pressure is built up at the spinning wheel. Adding residual drive torque and braking torque thus allows the wheel that does not spin to transmit a higher drive torque.

To ensure driving stability, the ABD system is switched off if any wheel spin tendency is sensed at **the second driven wheel** and the ABD control pressure in the brake is reduced.
A wheel spin tendency **of the second driven wheel means:** Both driven wheels wheels (rear wheels) rotate at a higher speed than the non-driven wheels (front wheels).

At road speeds above approx. 45 mph (front-axle speed signal), ABD control is terminated or not reactivated anymore. To avoid thermal overloads on the brake system, ABS control is not enabled by the control unit anymore if a boundary temperature was computed from brake load and time factors.
Operation of the ABD function is displayed to the driver by a green information lamp.
A red warning lamp lights up if the ABD is inoperative.

For a functional description of the individual components, see page 45 - 9

Schematic diagram - ABS 5 / ABD

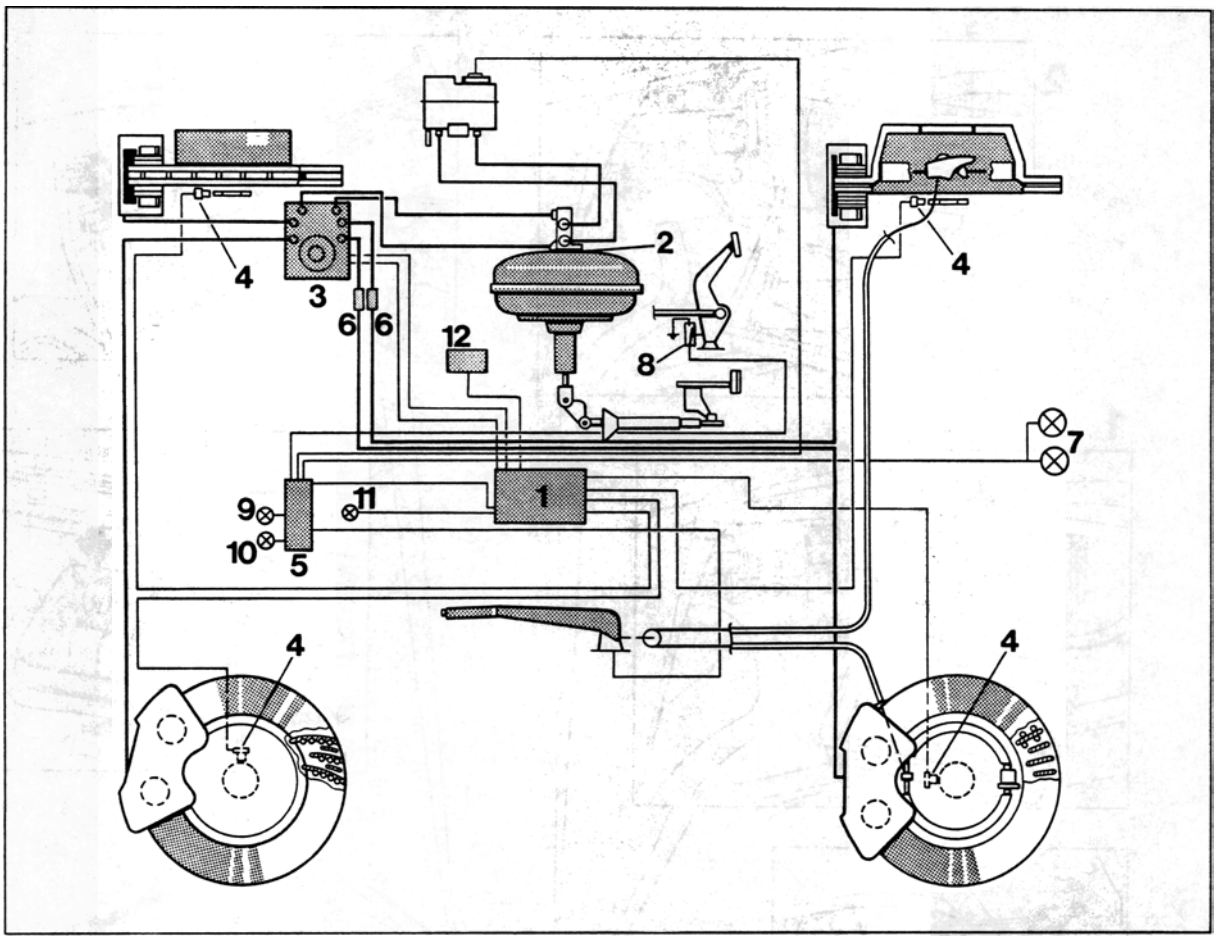

154

- **ABS/ABD** control unit

2 - Tandem brake master cylinder

3 - **ABS/ABD** hydraulic unit (**4** hydraulic outputs)

4 - ABS sensors

5 - Central Information System

6 - Proportioning valve (**2x**)

7 - Brake light

8 - Stop light switch

9 - ABS warning lamp

10 - **ABD warning lamp**

11 - **ABD operation lamp**

12 - **DME control unit**

Component layout (ABS 5 and ABS 5 / ABD)

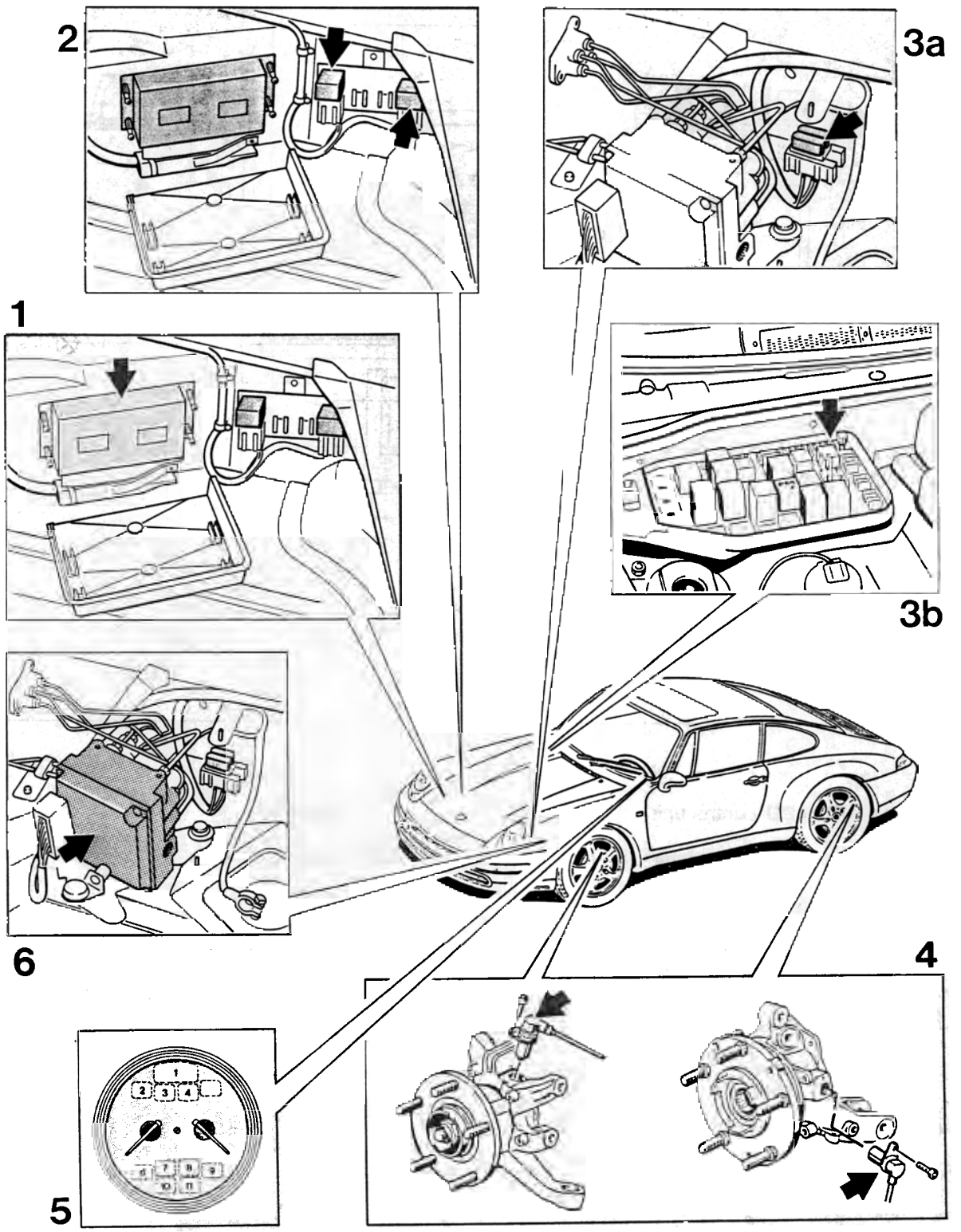

Function of individual components

1. Control unit (ABS 5 and ABS 5 / ABD)

Processes the incoming signals and triggers the solenoid vales and/or the return pump of the hydraulic unit if wheel slip is excessive (also refer to system description).
Switches ABS or ABS/ABD off if a system fault is detected, activates the warning lamp and stores the fault in a non-volatile memory.

Note

The control units are identified by their Part Nos. and by a self-adhesive sticker with a color edge.
ABS 5 - Sticker with **black** edge.
ABS 5 / ABD **to end of MY '94** - Sticker with **yellow** edge.
ABS 5 / ABD **from MY '95** (Rear-wheel drive and four-wheel drive models) - Sticker with **red** edge.

To keep the plugging cycles of the control unit connector to the minimum possible, the control unit was located in a suitable position.

2. Relays

The solenoid relay (R68) is triggered (closed) by the control unit as soon as the control unit is supplied with voltage from the alternator (D+ / terminal 61).
If the relay has closed (picked up), positive (+) battery voltage (terminal 30) is available at the coils of all solenoids (in the hydraulic unit).

As soon as the ABS or ABD starts the regulating cycle, the control unit connects the corresponding solenoid coil of the solenoid to be controlled on the respective wheel to negative.

The return pump relay (R65) is triggered by the control unit (negative) if a return feed operation is required and is then closed.
When the relay has closed (picked up), battery + (terminal 30) is present at the return pump, causing the pump to run.

Note

Both relays are identical 50 A power relays.
The R 65 and R 68 identifications are indicated on the power relay **cover**.
R 68 is the rearmost relay (further away from the control unit than relay R 65).
To remove the relay cover, remove the relay bracket, pushing put the (center) body-bound rivet.

3. Fuses

3a. The 60 A Maxifuse (arrow) is used to protect the return pump and the solenoids.

Note

The second 60 A Maxifuse is used to protect the DME.

3b. The 15 Amp fuse (Nr. 16) on the Central Electrical Systme protects the control unit power supply (ABS 5 and ABS 5 / ABD).

4. Speed sensor

The speed sensors (rpm sensors) supply wheel speed information (speed information for each individual wheel) to the control unit. The Speed sensors operate according to the inductive principle and, corresponding to the number of teeth of a pulse wheel, generate sinusoidal alternating voltages, the frequency of which is an indicator of the wheel speed.

Note

The front and rear speed sensors are **different**.
Identification: Part No. on speed sensor wire and position of mounting hole relative to the edge position (see page 45-23).

5. Warning and information lamps

System readiness display (warning lamps).

Fault display (warning lamps).

Control display (ABD information lamp).

Note

No. 7 (Page 45-8) = ABS warning lamp
No. 3 (Page 45-8) = ABD warning lamp
No. 2 (Page 45-8) = ABD information lamp

6. Hydraulic unit

The main components of the hydraulic unit consist essentially of several fast-switching solenoids and a return pump. Regardless of the pressure in the brake master cylinder, the hydraulic unit can modify the fluid pressure to the wheel cylinders (pressure holding or pressure reduction). It is not possible, however, to increase the pressure beyond the pressure applied by the master cylinder.

The ABS 5 hydraulic unit has
3 hydraulic outputs (3-channel system) and 6 solenoid valves (3 inlet and 3 outlet solenoids).

The ABS 5 / ABD hydraulic unit has
4 hydraulic outputs (4-channel system) and 10 solenoid valves (4 inlet solenoids / 4 outlet solenoids as well as 1 switch-over and 1 intake solenoid).
The intake and switch-over solenoids are required to allow the return pump to perform two duties:

I. Return feed to brake master cylinder (pressure release) for ABS control.
II. Supply feed (presure buildup) to right or left rear wheel brake cylinder with **ABD control.**

Tools

1. System Tester 9288 with adapter lead 9288/1 and corresponding module (language-dependent), **as of** Version 5.0, 1993.

2. Standard digital multimeter.

3. When performing measurements with the multimeter, use auxiliary leads (shop-made) on control unit connector in order not to damage the connector contacts in the control unit connector.
   Standard pins : Fit 2 spade terminals N 17 457 2 to 1 or 2 auxiliary leads.
   Mini pins : Fit suitable spade terminals (to be released shortly) to 1 or 2 auxiliary leads.

Control unit connector pin assignment (ABS 5 and ABS 5 / ABD)

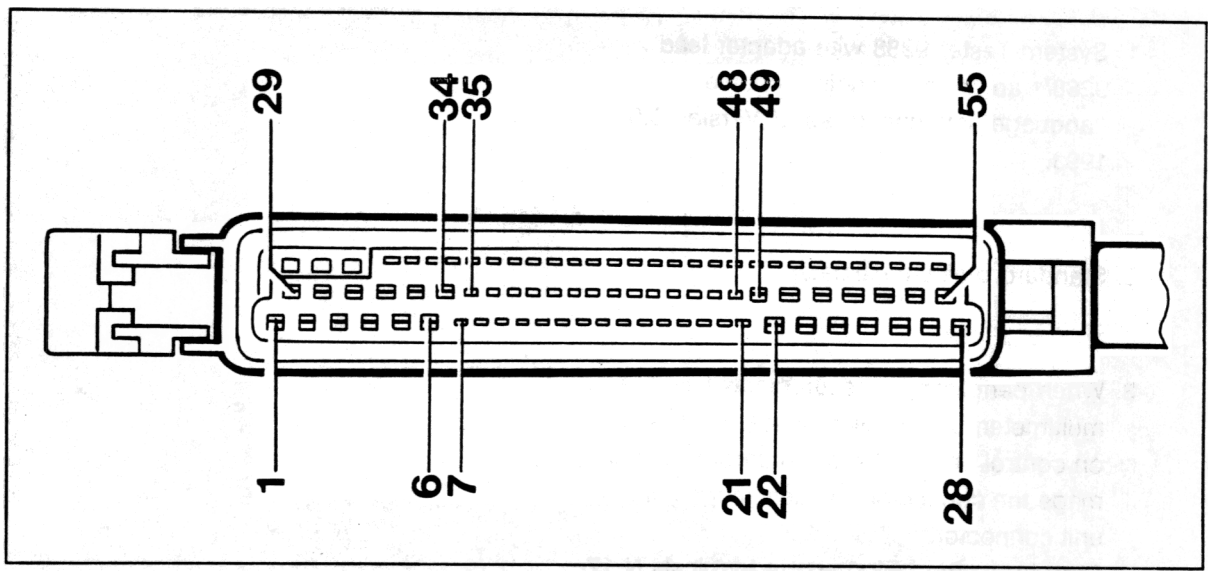

1 - Control unit voltage supply (Terminal 15 / from fuse No. 16)

2 - Voltage for return pump relay and valve relay

3 - With solo ABS = Not used

3 - With ABS / ABD = Switchover solenoid triggering (ground)

4 - With solo ABS =Not used

4 - With ABS / ABD = Intake solenoid triggering (ground)

5 - Triggering of front left inlet valve (ground)

6 - With solo ABS = Not used

6 - With ABS / ABD =Triggering of rear right inlet solenoid valve (ground)

7 - Return pump relay triggering (ground)

8 - Not used

9 - **Up to MY '95 = Not used** with Tiptronic vehicles **as of MY '96** = Output signal (Front left rpm sensor) **to** Tiptronic control unit

10 - Front left speed sensor ground

11 - Signal from rear right speed sensor

12 - Rear left speed sensor ground

13 - With solo ABS = Output signal (Rear left speed sensor) to Central Information System (speedometer signal)

13 - With ABS / ABD = Signal from rear left speed sensor

14 - Front right speed sensor ground

15 - Signal from front right speed sensor

16 - L wire from diagnosis

17 - 18 Not used

19 - Engine monitor (Return pump)

20 - 23 Not used

24 - D+ , terminal 61

25 - With solo ABS = Triggering of rear axle outlet solenoid (ground)

25 - With ABS / ABD = Triggering of rear left outlet solenoid (ground)

26 - Triggering of front right outlet solenoid (ground)

27 - Not used

28 - Ground

29 - Ground

30 - Triggering of ABS warning lamp (ground)

31 - With solo ABS = Not used

31 - With ABS / ABD = Triggering of ABD warning lamp (ground)

32 - With solo ABS = Not used

32 - With ABS / ABD = Triggering of ABD information lamp (ground)

33 - Triggering of front left outlet solenoid (ground)

34 - With solo ABS = Not used

34 - With ABS / ABD = Triggering of rear right outlet solenoid (ground)

35 - With **ABS / ABD as of MY '95 (RWD and 4WD)** = Signal from front left speed sensor

36 - With **ABS / ABD up to end of MY '94** = Signal from front left speed sensor

36 - With **solo ABS** = Signal from front left speed sensor

37 - Solenoid relay triggering (ground)

38 - Rear right speed sensor ground

39 - Not used

40 - With solo ABS = Signal from rear left speed sensor

40 - With ABS / ABD = Output signal (rear left speed sensor) to Central Information System (speedometer signal)

41 - Not used

42 - With manual transmission vehicles = Not used

42 - With Tiptronic vehicles = Output signal (front right speed sensor) **to** Tiptronic control unit

43 - 45 Not used

46 - Diagnosis K wire

47 - With solo ABS = Not used

47 - With ABS / ABD = Throttle information signal **from** DME control unit. Required for ABD control

48 - Stop light switch signal (system voltage when brakes are actuated)

49 - 52 Not used

53 - With solo ABS = Triggering of rear-axle inlet solenoid (ground)

53 - With ABS / ABD = Triggering of rear left inlet solenoid (ground)

54 - Triggering of front right inlet solenoid (ground)

55 - Not used

ABS 5 and ABS 5 / ABD Menus

Overview of available menus

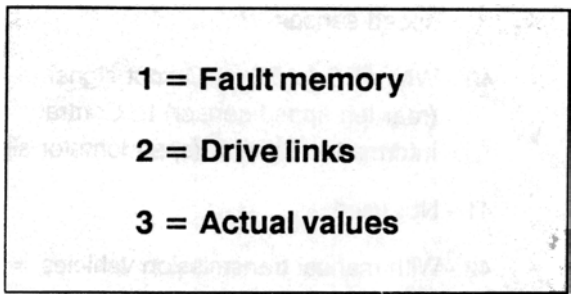

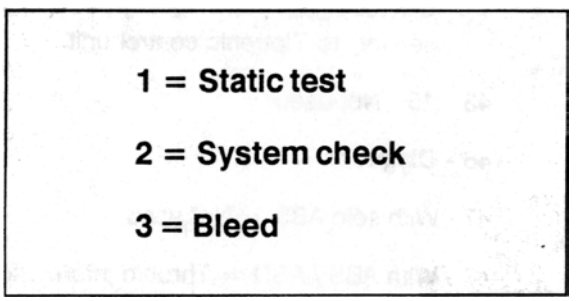

Note

ABS 5 has only 5 menus.
3 = Bleed does not exist since this system has no ABD circuit.

Fault memory: see page 45 - 15

Drive links: see page 45 - 34

Actual values: see page 45 - 37

Static test: see page 45 - 39

System check: see page 45 - 40

Bleed: see page 45 - 45

Fault memory

Overview of available fault displays of ABS 5 and ABS 5 / ABD

Note

If no explanatory note is given on the below fault displays, the displays apply both to ABS 5 (solo ABS) and ABS 5 / ABD.

	Fault code
§§: Control unit faulty	11
§§: Stop light switch §§§§§§§§§§§§§§§§§§§§§§§§	12
§§: Incorrect gearwheel §§§§§§§§§§§§§§§§§§§§§§§§	13
§§: Intake valve §§§§§§§§§§§§§§§§§§§§§§§§	14 (only with ABD)
§§: Switch-over valve §§§§§§§§§§§§§§§§§§§§§§§§	15 (only with ABD)
§§: Throttle information §§§§§§§§§§§§§§§§§§§§§§§§	17 (only with ABD)
§§: Speed sensor front left Signal unplausible §§§§§§§§§§§§§§§§§§§§§§§§	21
§§: Speed sensor front right Signal unplausible §§§§§§§§§§§§§§§§§§§§§§§§	22
§§: Speed sensor rear right Signal unplausible §§§§§§§§§§§§§§§§§§§§§§§§	23
§§: Speed sensor rear left Signal unplausible §§§§§§§§§§§§§§§§§§§§§§§§	24
§§: Speed sensor front left Op.circ./GND/+ short §§§§§§§§§§§§§§§§§§§§§§§§	25
§§: Speed sensor front right Op.circ./GND/+ short. §§§§§§§§§§§§§§§§§§§§§§§§	26
§§: Speed sensor rear right Op.circ./GND/+ short §§§§§§§§§§§§§§§§§§§§§§§§	27
§§: Speed sensor rear left Op.circ./GND/+ short §§§§§§§§§§§§§§§§§§§§§§§§	28

§§: ABS valve Inlet FL Op.circ./GND/+ short §§§§§§§§§§§§§§§§§§§§§§§§	Fault code 31
§§: ABS valve Inlet FR Op.circ./GND/+ short §§§§§§§§§§§§§§§§§§§§§§§§	32
§§: ABS valve Inlet rear Op.circ./GND/+ short §§§§§§§§§§§§§§§§§§§§§§§§	33 (only with solo ABS)
§§: ABS valve Inlet RL Op.circ./GND/+ short §§§§§§§§§§§§§§§§§§§§§§§§	33 (nur mit ABD)
§§: ABS valve Inlet RR Op.circ./GND/+ short §§§§§§§§§§§§§§§§§§§§§§§§	34 (only with ABD)
§§: ABS valve Exhaust FL Op.circ./GND/+ short §§§§§§§§§§§§§§§§§§§§§§§§	35
§§: ABS valve Exhaust FR Op.circ./GND/+ short §§§§§§§§§§§§§§§§§§§§§§§§	36
§§: ABS valve Exhaust rear Op.circ./GND/+ short §§§§§§§§§§§§§§§§§§§§§§§§	Fault code 37 (only with solo ABS)
§§: ABS valve Exhaust RL Op.circ./GND/+ short §§§§§§§§§§§§§§§§§§§§§§§§	37 (only with ABD)
§§: ABS valve Exhaust RR Op.circ./GND/+ short §§§§§§§§§§§§§§§§§§§§§§§§	38 (only with ABD)
§§: Valve relay Op.circ./GND/+ short §§§§§§§§§§§§§§§§§§§§§§§§	39
§§: Return pump Op.circ./GND/+ short §§§§§§§§§§§§§§§§§§§§§§§§	40

Fault overview / Troubleshooting (Diagnostics / Test plan)

Test point	Fault code	Fault display (Abbreviated fault text)	Page
	11	Control unit faults	
2	12	Stop light switch	
3	13	Incorrect gearwheel	45 - 20
4*	14*	Intake valve	45 - 21
5*	15*	Switch-over valve	45 - 21
6*	17*	TP information	45 - 21
7	21	Speed sensor front left (Signal unplausible)	45 - 22
8	22	Speed sensor front right (Signal unplausible)	45 - 24
9	23	Speed sensor rear right (Signal unplausible)	45 - 24
10	24	Speed sensor rear left (Signal unplausible)	45 - 24
11	25	Speed sensor front left***	45 - 24
12	26	Speed sensor front right***	45 - 25
13	27	Speed sensor rear right***	45 - 25
14	28	Speed sensor rear left***	45 - 25
15	31	ABS valve Inlet front left	45 - 26
16	32	ABS valve Inlet front right	45 - 27
17**	33**	ABS valve Inlet rear or rear left on ABD vehicles	45 - 27
18*	34*	ABS valve Inlet rear right	45 - 28
19	35	ABS valve Exhaust front left	45 - 28
20	36	ABS valve Exhaust front right	45 - 28
21**	37**	ABS valve Exhaust rear or rear left on ABD vehicles	45 - 28
22*	38*	ABS valve Exhaust rear right	45 - 29
23	39	Valve relay	45 - 29
24	40	Return pump	45 - 32

* Only for vehicles with ABD

** Fault text on vehicles with ABD differs from text for solo ABS

*** Open circuit / short to ground / short to positive

Notes on Fault memory / Troubleshooting

Caution: The ABS or ABD warning lamp may in certain cases light up even if no fault is stored in the fault memory.
In this case, the following faults may be present:

Mechanical switch contacts (3 contacts fitted / see arrows) in control unit connector may be bent. This shorts the contacts to ground.
Explanation: Normally those contacts are grounded only when the connector is pulled off. This causes the ABS or ABD warning lamp, respectively, to be activated when the ignition is switched on.

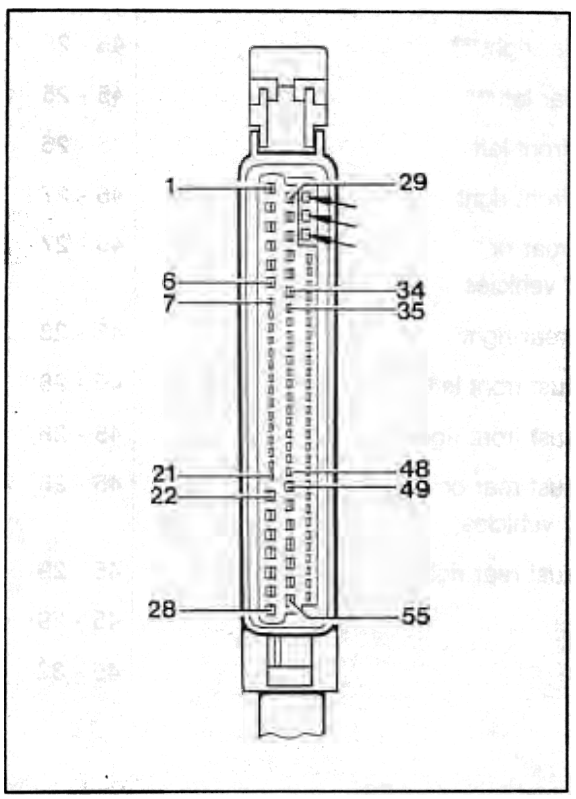

The "Terminal 61" signal is missing at the control unit when the engine is running.
This can be checked on the Actual values menu using System Tester 9288 (see page 45 - 37/38).

Control unit power supply
(PIN 1) below 9.5 Volt (low voltage).

Important notes

After a fault in the anti-lock system has been remedied, the fault memory must be erased. Then run a static test (preliminary electrical system check) using the **„Static test"** menu. Test drive the car and read out the fault memory once more.

When the hydraulic unit has been replaced or removed and refitted, fill/bleed the system. Then run a system check using the „System check" menu.

Fault, fault code	Possible causes, remedy, notes
Test point 1	
Control unit faulty **Fault code 11**	Replace control unit. Caution: Check the following items before replacing the control unit: Check if interference caused by ignition voltage is present (e.g. due to incorrectly fitted plug connectors). Check if any potential differences caused by contact resistance are present (due to missing or poor grounding). **Important:** Poor grounding may be present not only on the components affected but also on other important ground points, e.g. transmission ground contact from starter to body. Is ground present at control unit connector PIN 28, 29? These wires are connected to ground point II (luggage compartment, front right).

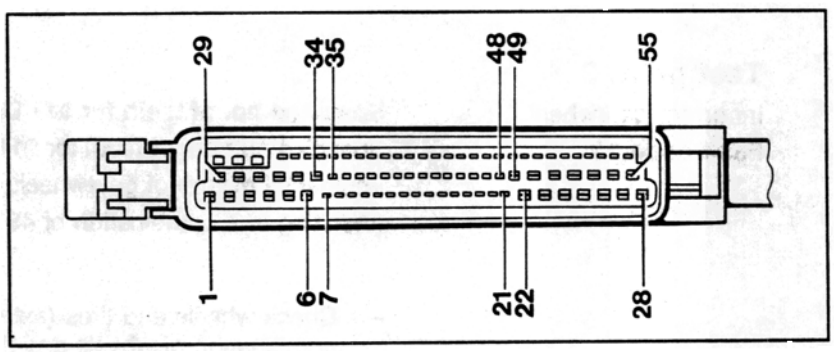

Fault, fault code	Possible causes, remedy, notes

Test point 2

Stop light switch
Fault code 12

Check with System Tester 9288 on **„Actual values"** menu. Actuate brake pedal after selecting the stop light switch. Specified display: Display changes from open to closed.

Pull off wires from stop light switch (No. 2). Check stop light switch with multimeter (remove switch for testing if required).

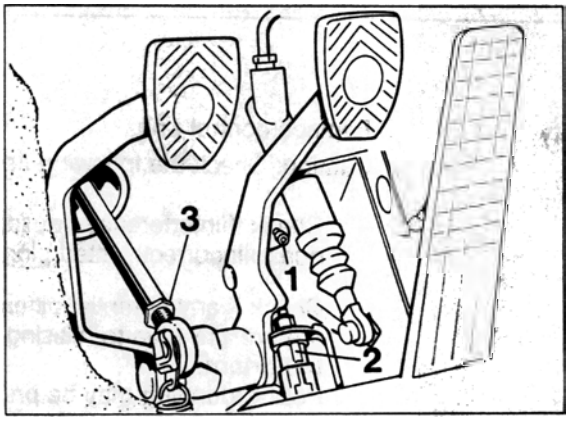

1452-46

Check stop light switch adjustment (refer to Vol. IV, Running Gear, page 46 - 11).

Check electrical wiring according to wiring diagram.

Test point 3

Incorrect gearwheel
Fault code 13

Specified no. of teeth for 911 Carrera (993) = 48 teeth
Specified number of teeth for 911 Carrera (964) = 45 teeth.
Accidental mix-up of gearwheels on front axle may occur (resulting in a combination of 48 teeth at front / 45 teeth at rear).

Check wheels and tires (extreme tire differences or incorrect combination of wheels and tires).

Fault, fault code	Possible causes, remedy, notes
	Check ABS gearwheels (tensioning discs) at front axle for correct number of teeth (Specification = 48 teeth). Identification mark: Spare part No. stamped on part (Part No.) **993 = Part No. starting with 993. Black color.** 964 = Part No. starting with 964. Note The 993 rear axle is fitted with pulse strips with a 48 module. The 964 has toothed ring gears with 45 teeth.
Test point 4 Intake valve **Fault code 14**	General procedure as for test point 15 / fault code 31. – Check different conector pin assignment (PIN No.) acc. to wiring diagram. When checking the solenoid valves, select ABD with System Tester 9288 on Drive links menu - solenoid valves (MV).
Test point 5 Switch-over valve **Fault code 15**	General procedure as for test point 15 / fault code 31. – Observe different connector pin assignment (PIN No.) acc. to wiring diagram. When checking the solenoid valves, select ABD with System Tester 9288 on Drive links menu - solenoid valves (MV).
Test point 6 Throttle (TP) information **Fault code 17**	The ABS/ABD control unit does not receive any TP information (throttle signal) from the DME control unit. The thorttle signal is checked with System Tester 9288 on the Actual values menu. Check throttle signal (throttle position) on Actual values menu with the engine running (see page 45 - 37). Then select DME System and check throttle signal (throttle angle) again in Actual values menu. If the signal is present in the DME system but not in the ABS/ABD system, the fault is in the wiring path between the ABS/ABD control unit and the DME control unit. Check wiring path (wires, connectors on control units and 14-pin connector below driver's seat) according to wiring diagram.

Fault, fault code	Possible causes, remedy, notes

Test point 7

Speed sensor
front left
Signal unplausible
Fault code 21

Control unit receives incorrect / unrealistic speed sensor signal.

Procedure

Check speed sensor signal with System Tester 9288 on "Actual values" menu. Then select Speed sub-menu and select the Speed sensor front left option on this menu.
Two checks can now be carried out.
Check 1 with vehicle raised.
(Check for accidental interchanging of speed sensor and check of speed sensor signal quality).
Check 2 during straight-ahead driving at approx. 2-4 km/h.
(Signal quality of individual wheels is compared). Check 2 provides better conclusions on signal quality than Check 1.

Re: Check 1

To check, manually rotate left front wheel steadily at approx. 2 to 3km/h (observe tester display).
Increase speed slowly and observe speed increase (display) at the same time.

Specifications/Specifications display
Speed increments of approx. 0.06 km/h. Initial display at 1.75 km/h.
This means: The subsequent value must exceed the value measured last by 0.06 km/h or must be 0.06 km/h below this value when the wheel is rotated slower.
In some cases, the tester rounds the value down to 0.05 km/h or up to 0.07 km/h.

Example

First measured value	= 1.81 km/h
Second value as specified	= 1,87 km/h
Third specified value	= 1,93 km/h
etc.	

Fault, fault code	Possible causes, remedy, notes

Re: Check 2

Call up all 4 wheels on tester display by additionally pressing tester button 1 (Function key 1).

Drive smoothly at approx. 2-4 km/h in straight-ahead direction and have a helper observe the tester display.

Specification: The wheel speeds of all four wheels must not deviate from each other by **more than 1 km/h**.

For additional details on Check 1 and Check 2 on the Actual values menu, refer to page 45 - 37.

Possible faults (cause for discrepancy)

Excessive air gap between speed sensor und gearwheel (pulse wheel) or air gap too small due to abrasion (chipping) (Check installation).

Pulse wheel damaged or corroded.

Incorrect pulse wheel (Should have 48 teeth).

Front-axle / rear axle speed sensors may have been mixed up. This causes the edge of the speed sensor to be offset by 90° with regard to the pulse wheel edge.
Identification: Mark on speed sensor wire (stamped Part No.) and position of mounting hole relative to edge position.
1 = Front-axle speed sensor
2 = Rear-axle speed sensor.

Wheel bearings damaged (wheel bearings are not adjustable).

Connector in wiring path from speed sensor to control unit or PIN on control unit connector is not o.k.

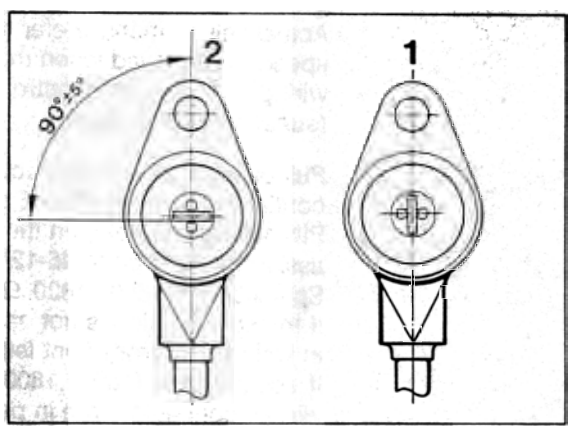

1959-45

Fault, fault code	Possible causes, remedy, notes

Test point 8

Speed sensor front right
Signal unplausible
Fault code 22

General procedure as for test point 7 / fault code 21 (Check speed sensor signal with System Tester 9288).

Speed sensor signal: Enter the Actual values menu. Select Speed and then Speed sensor front right.

Test point 9

Speed sensor rear right
Signal unplausible
Fault code 23

General procedure as for test point 7 / fault code 21 (Check speed sensor signal with System Tester 9288).

Speed sensor signal: Enter the Actual values menu. Select speed and then speed sensor rear right.

Test point 10

Speed sensor rear left
Signal unplausible
Fault code 24

General procedure as for test point 7 / fault code 21 (Check speed sensor with System Tester 9288).

Speed sensor signal: Enter Actual values menu. Select speed and then speed sensor rear left.

Test point 11

Speed sensor front left
Open circuit/ short to ground/ short to positive
Fault code 25

Wires / connectors between control unit and speed sensor are not o.k. (open circuit, short to positive or short to ground) or the speed sensor itself is damaged.

- Check speed sensor wire and connector wiring in wheel area for damage (visual check).

  Check speed sensor signal with System Tester 9288 across the Actual values menu (Refer to Test point 7 / fault code 21). If no speed is displayed when the left front wheel rotates, check the wiring path from the control unit connector to the speed sensor (subsequent test step).

  Pull off control unit connector. Measure internal resistance / continuity between PIN 36 and PIN 10 or between PIN 35 and PIN 10, respectively, on the connector (refer to connector pin assignment on page 45-12/13).
  Specification 1600...1800 Ω.
  If the specification is not obtained, check wiring and connectors in wiring path from front left speed sensor.
  If specification (1600...1800 Ω) is not obtained although wires / connectors are in perfect condition, replace the speed sensor.

Fault, fault code	Possible causes, remedy, notes

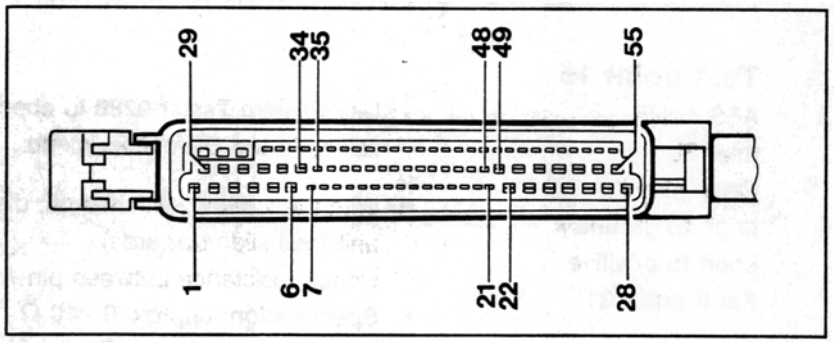

Check PIN 10, 35 or 36 (depending on model / Model Year) of control unit connector (check visually for deformation).

Test point 12

Speed sensor front right
Open circuit/ short to ground/ short to positive
Fault code 26

General procedure as for test point 11 / fault code 25.

- Speed sensor signal: Check with System Tester 9288 on Actual values menu (Select sub-menu: Speed / Speed sensor signal front right).
- Internal resistance / continuity between PIN 15 and PIN 14 on control unit connector.

Test point 13

Speed sensor rear right
Open circuit/ short to ground/ short to positive
Fault code 27

General procedure as for test point 11 / fault code 25.

Speed sensor signal: Check with System Tester 9288 on Actual values menu (Select sub-menu: Speed / Speed sensor signal rear right).

Internal resistance / continuity between PIN 11 and PIN 38 on control unit connector.

Test point 14

Speed sensor rear left
Open circuit / short to ground / short to positive
Fault code 28

General procedure as for test point 11 / fault code 25.

Speed sensor signal: Check with System Tester 9288 on Actual values menu (Select sub-menu: Speed / Speed sensor rear left).

Internal resistance / continuity between PIN 13 and PIN 12 (ABS / ABD) or between PIN 40 and PIN 12 (solo ABS) on control unit connector.

Printed in Germany – VI.1994

Fault, fault code	Possible causes, remedy, notes

Test point 15

ABS valve
Inlet FL
Open circuit /
short to ground /
short to positive
Fault code 31

Use System Tester 9288 to check operation of the ABS solenoid valves in the Drive links menu.

1. With the ignition switched off, disengage connector from hydraulic unit (pull slide upwards).
   Check resistance between pin 7 and pin 15 on hydraulic unit.
   Specification: approx. 9 - 10 Ω.
   Specification not o.k.: Replace hydraulic unit.
   Caution: The resistance specifications on the hydraulic unit differ according to the solenoids.
   All inlet solenoids and the ABD solenoids (USV +ASV) ≈9 - 10 Ω.
   All outlet (exhaust) solenoids ≈4 - 5 Ω.

2. Switch off ignition and pull off connector from control unit.
   Check PIN 5 of control unit connector to PIN 7 of hydraulic unit connector for continuity (open circuit) and for short to ground or short to positive.

3. If the above items (1...2) are o.k., replace control unit **on a trial basis** (final stage faulty).
   Then check operation of front left solenoid valves (MV) with System Tester 9288 on Drive links menu (reaction of left front wheel). If reaction is not o.k., check hydraulic or electrical assignment (see below text).
   Assignment check: In Drive links menu, front left solenoid valves (MV) sub-menu, the left front wheel must lock in test step 2 (also refer to page 45 - 35/36). If **a different** wheel locks, the assignment is incorrect.

4. If the drive links check described under item 3 above is not o.k. but if **no** hydraulic pipes or electrical wires have been interchanged and if the control unit was replaced, the hydraulic unit must be replaced (mechanical fault in ABS solenoid valve).

   Note

   Reuse the old control unit again afterwards.

Fault, fault code	Possible causes, remedy, notes
Test point 16 ABS valve Inlet FR Open circuit / short to ground / short to positive **Fault code 32**	General procedure as for test point 15 / fault code 31 Observe different connector pin assignment (PIN No.) according to wiring diagram. For internal resistance of solenoid, refer to test point 15. When checking the solenoids with System Tester 9288 on the Drive links menu, select front right solenoid valves (MV).
Test point 17 ABS valve Inlet rear Open circuit / short to ground / short to positive **Fault code 33**	Vehicles with solo ABS only. See below for ABS/ABD (Inlet RL). General procedure as for test point 15 / fault code 31. Observe different connector pin assignment (PIN No.) according to wiring diagram. For internal resistance of solenoid, refer to test point 15. When checking the solenoid with System Tester 9288 on the Drive links menu, select rear solenoids (MV).
ABS valve Inlet RL Open circuit / short to ground short to positive **Fault code 33**	Vehicles with ABS/ABD only General procedure as for test point 15 / fault code 31 Observe different connector pin assignment (PIN No.) according to wiring diagram. For internal resistance of solenoid, refer to test point 15. When checking the solenoid with System Tester 9288 on the Drive links menu, select rear left solenoids (MV).

Fault, fault code	Possible causes, remedy, notes
Test point 18 ABS valve Inlet RR Open circuit / short to ground / short to positive **Fault code 34**	General procedure as for test point 15 / fault code 31 Observe different connector pin assignment (PIN No.) according to wiring diagram. For internal resistance of solenoid, refer to test point 15. When checking the solenoid with System Tester 9288 on the Drive links menu, select rear right solenoids (MV).
Test point 19 ABS valve Exhaust FL Open circuit / short to ground / short to positive **Fault code 35**	General procedure as for test point 15 / fault code 31 Observe different connector pin assignment (PIN No.) according to wiring diagram. For internal resistance of solenoid, refer to test point 15. When checking the solenoid with System Tester 9288 on the Drive links menu, select front left solenoids (MV).
Test point 20 ABS valve Exhaust FR Open circuit / short to ground / short to positive **Fault code 36**	General procedure as for test point 15 / fault code 31 Observe different connector pin assignment (PIN No.) according to wiring diagram. For internal resistance of solenoid, refer to test point 15. When checking the solenoid with System Tester 9288 on the Drive links menu, select front right solenoids (MV).
Test point 21 ABS valve Exhaust rear Open circuit / short to ground / short to positive **Fault code 37**	Vehicles with solo ABS only. Refer to next page for ABS / ABD (Exhaust RL). General procedure as for test point 15 / fault code 31. Observe different connector pin assignment (PIN No.) according to wiring diagram. For internal resistance of solenoid, refer to test point 15. When checking the solenoid with System Tester 9288 on the Drive links menu, select rear solenoids (MV).

Fault, fault code	Possible causes, remedy, notes
ABS valve Exhaust RL Open circuit / short to ground / short to positive **Fault code 37**	Vehicles with ABS/ABD only General procedure as for test point 15 / fault code 31 Observe different connector pin assignment (PIN No.) according to wiring diagram. For internal resistance of solenoid, refer to test point 15. When checking the solenoid with System Tester 9288 on the Drive links menu, select rear left solenoids (MV).
Test point 22 ABS valve Exhaust RR Open circuit / short to ground / short to positive **Fault code 38**	General procedure as for test point 15 / fault code 31 Observe different connector pin assignment (PIN No.) according to wiring diagram. For internal resistance of solenoid, refer to test point 15. When checking the solenoid with System Tester 9288 on the Drive links menu, select rear right solenoids (MV).
Test point 23 Valve relay Open circuit / short to ground / short to positive **Fault code 39**	System Tester 9288 can be used to check if the solenoid valve has picked up or dropped out. Select solenoid valve relay in the Actual values menu. The following Tester display then appears: Valve relay tightened (picked up) or released (dropped out). Specified display: Valve relay tightened. If connectors or the solenoid relay have been disconnected, switch off the ignition before running the checks and then switch the ignition on again as the (solenoid) relay otherwise cannot pick up. The valve relay may also have dropped out if another system fault is present at the same time (ABS valve fault).

Fault, fault code	Possible causes, remedy, notes

1. Pull off valve relay (R68/No.2). Release the relay holder (press out body-bound rivet No. 3) to allow the relay cover to be removed.
   Check that connectors engage correctly in relay base (may have partially slipped down out of base).
   Check if voltage (approx. 12 volts) is present at relay base terminal 30 (system voltage). Check 60A fuse (see page 45-8 / 45-9) and wire from relay base to fuse if required.

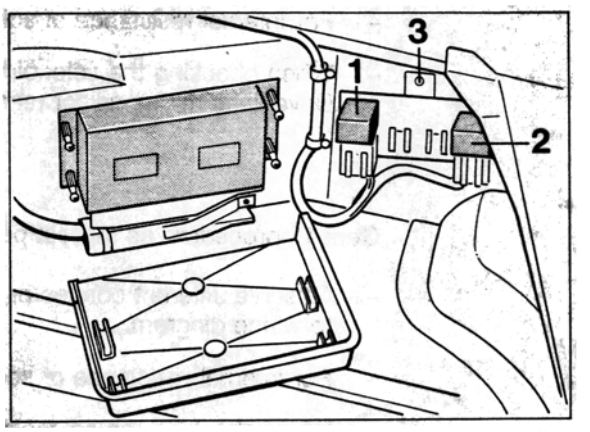

I773B-45

2. With the valve relay pulled off, jumper relay terminals 30 and 87.
   Use System Tester in „Actual values" menu to select the valve relay and check if tester displays the „Valve relay tightened" (picked up) message.
   Display „Valve relay tightened": Proceed with step 3.
   Display „Valve relay not tightened": Proceed with step 5.

3. Check if system voltage is present at terminal 86 of relay base (approx. 12 volt) when ignition is switched on.
   If required, check wire between control unit connector PIN 2 and relay base terminal 86.

Fault, fault code	Possible causes, remedy, notes

4. Replace valve relay on a trial basis or use the pump return relay (identical component) for this check.
   Then erase the fault memory and use the „Static test" menu to check if the fault has been remedied.
   If the fault **is still present**, pull off control unit connector with the ignition switched off and check the control circuit (wires once with valve relay connected and once without valve relay if required) according to wiring diagram for open circuit, short to ground and short to positive.

5. Pull off connector from hydraulic unit (pull slide upwards). Check wire between connector PIN 15 and valve relay base terminal 87 (valve relay pulled off) for open circuit, short to ground and short to positive.

6. Measure resistance between valve relay base terminal 87 (relay pulled off) and between the following PINs with the **control unit connector pulled off** (Connector is connected at hydraulic unit):
   Pins 5, 53, 54 and additionally 3, 4 and 6 on ABD vehicles **to** terminal 87.
   Specification: approx. 9...12 Ω in each case.

   PIN 25, 26, 33 and additionally 34 on ABD vehicles **to** terminal 87.
   Specification: approx. 4...7 Ω in each case.

   If specification is o.k., proceed with 7.

   If specification is **not** o.k., locate fault. The fault may be located between the control unit connector and the wires up to the connector of the hydraulic unit or within the hydraulic unit.

   To check the wires, pull off 15-pin connector from hydraulic unit (pull slide upwards). Check all solenoid wires between control unit connector and hydraulic unit connector according to wiring diagram for open circuit and short to positive or short to ground.

Fault, fault code	Possible causes, remedy, notes

To check the hydraulic unit, measure internal resistance of solenoids.
PIN 7, 8, 10 and additionally 1, 2 and 9 on ABD vehicles to PIN 15. **Specification:** approx. 9...10 Ω in each case.
PIN 5, 6, 11 and additionally 13 on ABD vehicles to PIN 15. **Specification** approx. 4...5 Ω in each case.

Specification not o.k.: Replace hydraulic unit.

7. If all test steps are o.k., replace ABS and/or ABS/ABD control unit on a trial basis (final stage faulty).

Test point 24

Return pump
Open circuit /
short to ground /
short to positive
Fault code 40

Feedback (Return pump monitor) to control unit is missing.

Using System Tester 9288, the Drive links menu can be used to check operation of the return pump.
Select Drive links menu and select the pump relay on this menu (Specification: Return pump operative).

1. Pull off return pump relay (R65/No.1). To allow the relay cover to be removed, detach the relay holder (press out body-bound rivet No. 3).
Check connectors for correct engagement in relay base (connector may have partially slipped down out of base).
Check if system voltage is present at terminal 30 of relay base (approx. 12 volts). Check fuse and wiring if required.

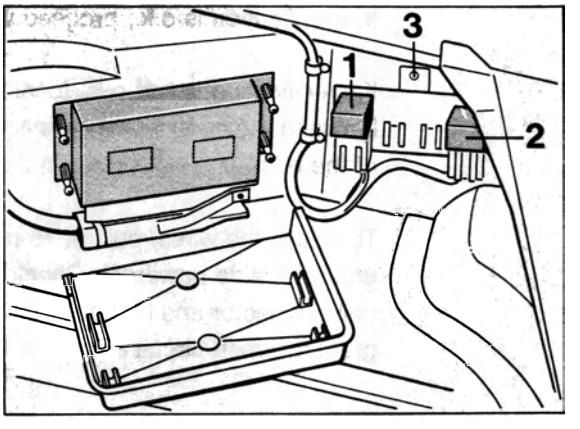

Fault, fault code	Possible causes, remedy, notes

2. Jumper terminals 30 and 87 on relay base. Return pump should run now. If the return pump does not run: Check attachment of ground cable at return pump (on return pump and battery ground) (Contact resistance due to poor screw-on connection).
   Check wiring of make circuit from relay base to hydraulic unit according to wiring diagram.
   Replace hydraulic unit if required. Prior to this, check if return pump is actually faulty (Use a separate wire to apply system voltage to PIN 3).

3. Fit return pump relay to relay base. To make sure that the connectors are not damaged in the relay base and that they are not pushed down, push the relay carefully into place (do not tilt relay). Check again with System Tester (as described above) to make sure the return pump is running. If pump does not run: Replace relay on a trial basis and repeat procedure.

4. Pull off control unit connector. This requires the control unit to be removed. Check control circuit according to wiring diagram.

5. Check wiring for pump motor monitor on control unit connector) (Control unit connector PIN 19).

Drive links (ABS and ABS / ABD)

— The Drive links menu can be used to activate the following actuators (drive links) with System Tester 9288:

Solo ABS

```
Drive links
1 = ABS warning lamp
2 = Pump relay
3 = MV front left     >
```

```
< Drive links
1 = MV front right
2 = MV rear
```

ABS/ABD

```
Drive links
1 = ABS warning lamp
2 = ABD warning lamp
3 = ABD info lamp     >
```

```
< Drive links
1 = Pump relay
2 = MV front left
3 = MV front right    >
```

```
< Drive links
1 = MV rear left
2 = MV rear right
3 = MV ABD
```

— When checking the solenoid valves (MV), the „Does wheel turn or is wheel locked-up“ messages may be displayed several times. The test step (sequence) is therefore indicated **as a number in brackets.**

Example:

The digit 3 in brackets (following the text) refers to **test step No. 3.**

```
Does front left
wheel turn (3)
1 = yes
3 = no
```

Important note

With the solenoid (MV) check, both operation and assignment (check for interchanging of electrical wires or hydraulic pipes) can be checked.

If no function or an incorrect function (reaction) is obtained when the selected actuator (drive link) is activated with System Tester 9288 or if the message **“See Diagnostic / test plan”** is displayed, carry out the troubleshooting procedure according to the test plan (troubleshooting list) from page 45 - 35.

Diagnostics / Test plan (troubleshooting) for actuators (drive links)

Re: Warning lamps und information lamp

The respective warning or information lamp (as selected) does not flash.

– Check bulb.

Check wiring to Central Information System and control unit according to wiring diagram.

Re: Pump relay

Return pump does not operate.

Carry out troubleshooting procedure according to test point 24 (Fault code 40) on page 45 - 32.

MV (solenoids) front and rear

Solenoids or return pump do/does not operate correctly. If a mechanical fault is present in a solenoid, the fault will not be stored in the fault memory.
Hydraulic pipes or electrical wiring may have been interchanged accidentally.

If a fault has been stored in the fault memory, start by remedying this fault (also refer to page 45-17).

Test step 1 (not o.k.).

– Inlet solenoid faulty.

– Electrical wiring/hydraulic piping interchanged.

Test step 2 (not o.k.).

Brake pedal has not been operated.

If another wheel locks up (with parking brake released and selector lever of Tiptronic vehicles in N position), the hydraulic pipes or electrical wires have been interchanged.

Test step 3 (not o.k.)

Exhaust (outlet) solenoid faulty.

Solenoids (MV) for ABD

ABD solenoids not o.k. (Operation or sealing).

Note

A correct check of the ABD solenoids is only possible if no faults are present at any ABS inlet solenoid or ABS exhaust (outlet) solenoid. Always start by reading out the fault memory and remedy this fault first as required (also refer to page 45-17).

Test step 1 not o.k.

– Operation of switchover valve not o.k.

  Return pump operation not o.k.
  Check pump operation, selecting the pump relay on the Drive links menu (Pump should then start to run).

Test step 2 not o.k.

– Operation of intake valve not o.k.

Test step 3 not o.k.

  Poor bleeding of ABD secondary circuit.

  Intake or switchover valve leaky.

Actual values (ABS and ABS/ABD)

This menu (function) allows the following actual values to be checked:

— Stop light switch

— Valve relay

Return pump

— Speed (Wheel speed / Check is possible for speeds of up to 19 km/h)

Front left
Front right
Rear left
Rear right

Terminal 61

Throttle (Does not exist on solo ABS system)

Re: Stop light switch:

Operate brake pedal.

Specified display: Shift from open to closed.

Re: Valve (solenoid) relay:

With the ignition switched on and with the engine running and the system in good condition, the following display appears: „Valve relay tightened" (picked up).

Re: Return pump:

Display: Return pump not activated
(Display would read activated if pump is running).

Re: Speed:

Use select button (function key) to select the desired wheel.
Wheel speed is displayed in km/h and mph (depending on wheel rpm).
If function key 1 is also pressed, the values for all wheels are displayed.

Example: Front left wheel

```
Speed
Front left
15.00 km/h - 9.32 mph
Return:                N
```

Example: All wheels

```
15.00 km/h   15.00 km/h
 9.32 mph     9.32 mph
15.00 km/h   15.00 km/h
 9.32 mph     9.32 mph
```

The wheels are assigned as follows on this display:

Left front wheel = 2 top left blocks	Right front wheel 2 top right blocks
Left rear wheel = 2 bottom left blocks	Right rear wheel = 2 bottom right blocks

Procedure

2 checks are possible if the speed sensor signal is monitored.

Check 1 with raised vehicle.
(Accidental interchanging of speed sensors and speed sensor signal quality check).

Check 2 during straight-ahead driving at approx. 2-4 km/h
(Signal quality of individual wheels is compared). Check 2 provdes better conclusions on signal quality than check 1.

Re: Check 1

To check, manually rotate left front wheel steadily at approx. 2 to 3km/h (observe tester display)..
Increase speed slowly and observe speed increase (display) at the same time.

Specifications/Specifications display
Speed increments of approx. 0.06 km/h. Initial display at 1.75 km/h. This means: The subsequent value must exceed the value measured last by 0.06 km/h or must be 0.06 km/h below this value when the wheel is rotated slower.
In some cases, the tester rounds the value down to 0.05 km/h or up to 0.07 km/h.

Example

First measured value	=1.81 km/h
Second value as specified	=1,87 km/h
Third specified value	=1,93 km/h
etc.	

Note

Lock the oposite wheel (to prevent from rotating) when checking the wheels on the rear axle.
On four-wheel drive vehicles, the three other wheels must be locked during this check.

Re: Check 2

Select all 4 wheels on tester display by additionally pressing tester button 1 (function key 1).

Drive smoothly at approx. 2-4 km/h in a straight-ahead direction and have a helper observe the tester display.

Specification: Wheel speeds of all four wheels must not
deviate from each other by **more than 1 km/h.**

Re: Signal of terminal 61

Specified display:
Engine stopped - Signal not present
Engine running - Signal present

Re: Throttle signal:

Precondition: Engine runs. Throttle position is displayed as a percentage. Display changes according to throttle position when the accelerator is depressed.

Static test (ABS and ABS/ABD)

Electrical system check (preliminary check), e.g. after relays have been replaced or after connectors have been pulled off.

Caution: Under no circumstances will this check replace the system check since **no check for accidental interchanging** of electrical wires and hydraulic pipes is made. **Neither** is the **mechanical** operation checked in this process.

If a fault is displayed, carry out the troubleshooting procedure according to the Diagnostic / Test plan from page 45-17.

System check (ABS and ABS/ABD)

Important notes

1. If work is carried out on the hydraulic unit, the speed sensors and the wiring assembly or if components and ancillaries are replaced, a **system check (operational check)** must be run. This may be required, for example, after performing accident repairs. This check avoids any accidental interchanging of electrical wiring or hydraulic piping and ensures **perfect system operation.** A system check should also be run after replacing certain brake pipes, e.g. on the adapter (near the upper left of the spare wheel well). Inadvertent bending of the brake pipes may result in incorrect hydraulic connections even though the pipes have different threads (M12 x 1 and M 10 x 1).

2. The system check is **menu-controlled (program-controlled)**. It is therefore **not possible to return to the previous test step!** The test period per test step is, in some cases, limited to 30 seconds. If the test period is exceeded, the following fault message is displayed:
   Test stage (with corresponding No.) not O.K.. **In this case, the system check has to be repeated from the start.**
   Before starting the system check, the static test is executed automatically (see page 45 - 39). **The system check is not released until the static test has been completed successfully**.

3. Since vehicles with solo ABS (without ABD) require less test steps (as some components are not fitted), the solo ABS system check bypasses the test steps related to ABD. On solo ABS systems, the system check is completed after test step No. 20 has been executed (ABS/ABD = 26 test steps).

4. Test drive the vehicle after completing the system check, making sure that a controlled braking operation (with ABS control) is performed at least once during this test drive.

System check overview (ABS and ABS/ABD)

Note

If a particular test step is found to be not o.k. during the system check, locate and remedy the fault according to the below overview.
Before starting the troubleshooting procedure, make sure that the fault is actually a system fault and is not caused by incorrect operation.
Example for incorrect operation: If a procedure displayed on the tester display is not run correctly or if an incorrect key is pressed inadvertently, the message „Test stage (with No.) not O.K. Remove cause!" is displayed.

Check of specified display / function	Test step not o.k. Possible causes, remedy, notes
Test step 1	
Activate ABS warning lamp – > Display should flash On ABS/ABD, the ABD warning lamp is also activated	For troubleshooting purposes, the warning lamp may also be activated via the Drive links menu. Check bulb Check wiring to Central Information System and control unit according to wiring diagram
Test step 2	
Activate ABD warning lamp – > Display should flash	Proceed as for test step 1
Test step 3	
Activate ABD information lamp – > Display should flash	Proceed as for test step 1

Check of specified display / function	Test step not o.k. Possible causes, remedy, notes

Test step 4

Activate return pump relay – >
Return pump operates audibly.

For troubleshooting purposes, the return pump may also be activated via the Drive links menu (Pump relay sub-menu)

For troubleshooting, proceed as for test point 24 (Return pump / fault code 40), page 45-32.

Test step 5

Actuate brakes briefly – >
Stop light switch status (open or closed) is checked.
Specification: Closed, but no display.

The open or closed status of the stop light switch can be checked on the Actual values menu.

For troubleshooting, proceed as for test point 2 (Stop light switch /fault code 12), page 45 - 20.

Test step 6 - 9

Check speed sensor for operation and accidental interchanging. Rotate all 4 wheels **individually** fast enough to cause the bar graph on the tester display to move up to the stop.
Caution: When checking a wheel on the rear axle, lock the opposite wheel, and in the case of four-wheel drive vehicles, lock all three other wheels.

Note

Test step No.:
6 = Front left wheel
7 = Front right wheel
8 = Rear left wheel
9 = Rear right wheel

The Speed sensors (wheel speeds) can be checked via the Actual values menu (Speed sub-menu).

Enter the Actual values menu. Select the Speed option.
Caution: If function key 1 is pressed additionally or a second time, all 4 wheels are displayed simultaneously on the tester display.
Turn wheel that has displayed a test step that is not o.k.
Caution: When checking a wheel on the rear axle, lock the opposite wheel, and in the case of four-wheel drive vehicles, lock all three other wheels. If the tester display now displays a not o.k. condition for **a different** wheel, the electrical wirnig has been interchanged accidentally (incorrect assignment of speed sensors). Normally this is impossible, yet it may occur if unauthorized repairs have been made on the wiring harness during accident repair operations.

Perform troubleshooting procedure as for test points 7 to 14 (for each wheel) from page 45 - 22.

Check of specified display / function	Test step not o.k. Possible causes, remedy, notes

Test step 10

Start engine. Check signal of terminal 61 – > Specification: Signal present.

For troubleshooting, the status of terminal 61 (present or not present) may also be checked using the Actual values menu.

Select terminal 61 on the Actual values menu. If the tester displays "not present" while the engine is running, select the Alarm system and also check the status of terminal 61 in the Input signals menu of the Alarm system.
If the signal is present **there**, the fault is located in the wire between the ABS control unit and the other control unit. Use wiring diagram for troubleshooting.
If the terminal 61 signal is **not present** in the other system either, proceed with the next item.

Alternator bulb (warning lamp) in instrument cluster faulty.
Check bulb (must be on when ignition is switched on).

Check alternator.

Test step 11

Throttle signal is checked.
Actuate throttle (accelerator) with engine running to check the values displayed on the tester for plausibility.

For troubleshooting, the throttle signal can also be checked with the Actual values menu.

For troubleshooting, proceed as for test point 6 (TP information / fault code 17), page 45 - 21.

Check of specified display / function	Test step not o.k. Possible causes, remedy, notes

Test steps 12 - 23

Check inlet and outlet (exhaust) solenoids in hydraulic unit for operation and accidental interchanging.
Rotate all 4 wheels individually (successively according to tester menu instructions).
On solo ABS systems, the rear-axle solenoids can be checked either on the right or the left wheel
(Test step 18...20)

For troubleshooting, the solenoids can also be activated individually using the Drive links menu.

If another but the wheel shown on the tester display reacts, this means that the brake pipes have been interchanged (e.g. on adapter fitting / see also page 45-40, item 1.).
This may also be due to accidental interchanging of electrical wiring if unauthorized repairs have been made on the wiring harness after accident repairs.

For troubleshooting, proceed as for test points 15 - 22, pages 45-26 to 45-29 (depending on test step that the fault occurred in).

Test steps 24 - 26

Check operation of ABD solenoid valves (intake and switchover valves) in hydraulic unit.
Do not actuate the brakes during this check.
The test may be run on either the right or the left wheel.

For troubleshooting, the ABD solenoids can also be triggered via the Drive links menu.

Perform troubleshooting as for test point 4 or 5 (fault code 14 or 15), page 45 - 21.

Menu: Bleed (ABS/ABD 5)

Important notes

The Bleed menu is not available (not required) on solo ABS systems.
This menu is used to bleed the ABD secondary circuit in the hydraulic unit on vehicles fitted with ABD.
Caution: This additional bleeding operation **is only** required after **conventional** bleeding and only when the hydraulic unit has been replaced or removed and refitted.
Bleeding the secondary circuit may also be required in the case of excessive pedal travel, provided that the system has been bled correctly before.

Bleeding the ABD circuit

Preparatory operations: Bleed brakes in conventional manner (Page 47 - 5/6, Vol. IV, Running Gear).

– Leave the bleeding device connected (switched on) to bleed the ABD circuit.
Bleeding pressure approx. 1.5...2.0 bar.
Overflow hose (for venting) on expansion tank is clamped off with a hose clamp.

– Connect **System Tester 9288** to diagnostic socket. Switch ignition on. Select „Bleed" menu.

– Open rear right bleeder valve (Use bottle to catch fluid).

– Press start button on System Tester. This causes specific functions in hydraulic unit to be activated (Return pump, ASV valve and switchover valve are activated).
Bleed system until the escaping brake fluid is bubble-free.
Also actuate (pump) the brake pedal during the entire bleeding process at least 10 times across the full pedal stroke (to the pedal stop).
Caution: On high-mileage or older vehicles, double the pump cycles and use only half the brake master cylinder stroke (to avoid damage to brake master cylinder / primary cup).

– Close rear right bleeder valve. Then press stop button on System Tester immediately.

Switch off ignition and disconnect System Tester.

– Switch off and disconnect bleeding device. Top up brake fluid if required.

68 01

Diagnosis/ Troubleshooting

Airbag

System B 02

Overview of contents

	Page
General information	68 - 3
Menu (overview of available menus)	68 - 4
Component layout	68 - 5
Operation of individual components	68 - 6
System description	68 - 7
Tools	68 - 8
Triggering unit connector assignment	68 - 9
Fault memory (overview of available displays)	68 - 10
Fault overview	68 - 11
Coding	68 - 16
Locking	68 - 17
Results	68 - 18

General information

The airbag system is monitored continuously by a diagnosis unit located in the triggering unit. Any faults present are highlighted by a warning lamp.

If a fault occurs, the central warning lamp and the airbag system warning lamp come on.

The airbag warning lamp lights for approx. 5 seconds after the ignition is switched on and will go off if no fault is stored in the fault memory.

If the lamp comes on again, this means that a fault is present in the system. The fault may be read out with System Tester 9288. If the fault is not crash-relevant, the warning lamp is not activated all the time but only for approx. 2 minutes.

Note

To allow the triggering unit to recognize all faults in the system, it requires a minimum time span of 10 seconds. to ensure that allow potential fault sources are checked during the vehicle test, the ignition must be switched on for at least 10 seconds.

The fault memory must be erased after a fault that has occurred in the airbag system has been removed.

Replacement of a component should be recorded in the Warranty and Maintenance booklet. Glue the documentation number into the space provided. The documentation number is indicated on a tear-off sticker on the spare part.

The following components must be removed and replaced if the vehicle has been involved in an accident that has caused the airbag to be triggered:

Contact unit

Both airbag units.

Menu

Overview of available menus

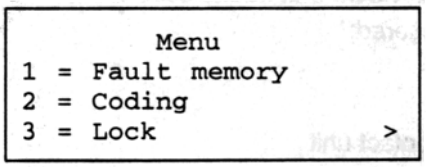

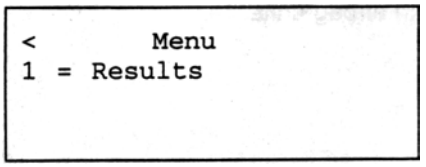

Fault memory: refer to page 68 - 10

Coding: refer to page 68 - 16

Lock: refer to page 68 - 17

Results: refer to page 68 - 18

Note

Observe safety precautions when working on the airbag system (Vol. V, pages 68 - 7 to 68 - 8).

Component layout

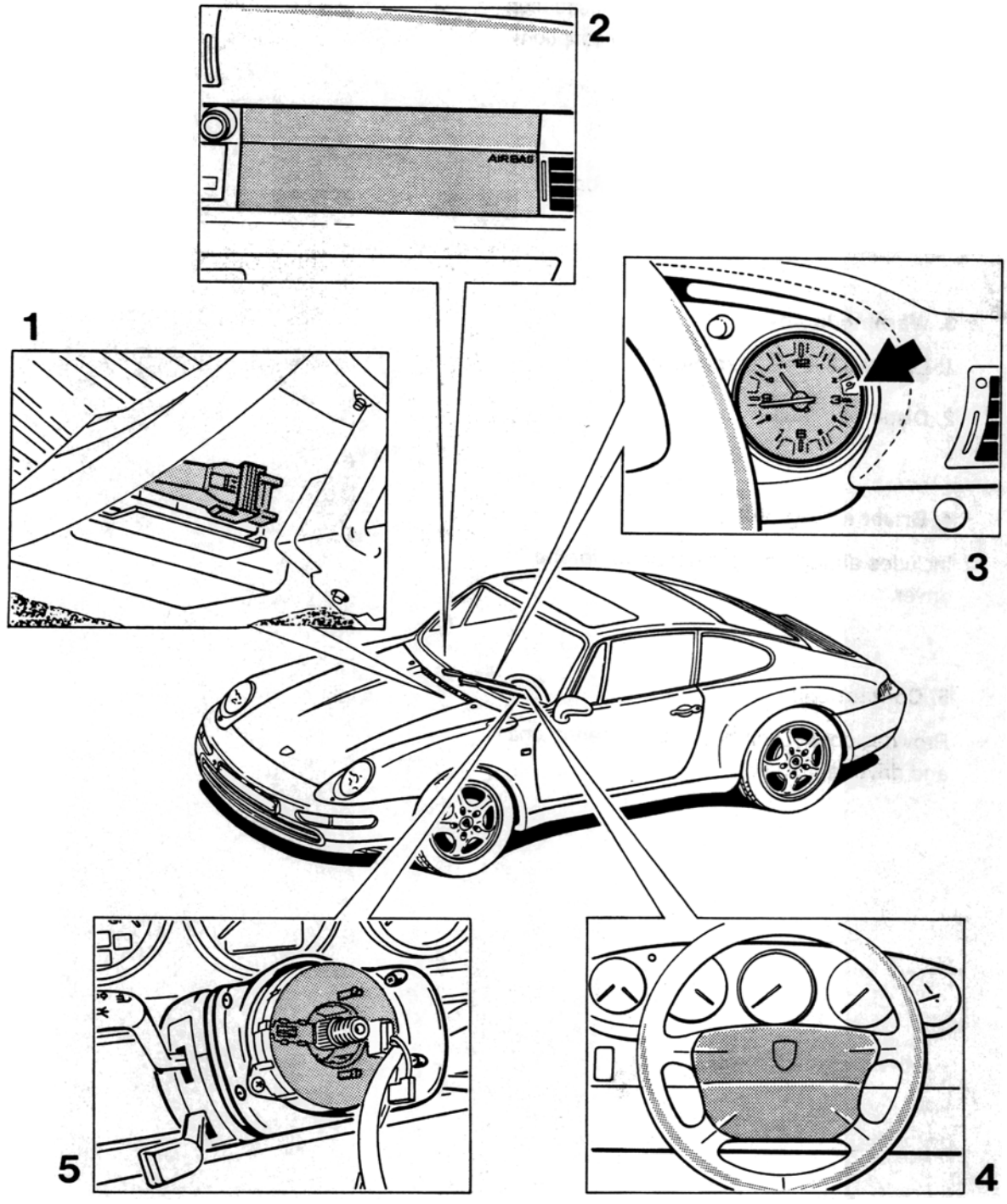

Operation of individual components

1. Triggering unit

Processes the incoming signals and triggers the airbag system when an accident situation is detected (also refer to system description).

2. Passenger airbag unit

Includes airbag and gas generator for the passenger.

3. Warning lamp

1. Displays system readiness.

2. Displays a fault.

4. Driver airbag unit

Includes airbag and gas generator for the driver.

5. Contact unit

Provides connection between triggering unit and driver airbag unit.

System description

The airbag system consists of the following components: triggering unit, contact unit, driver airbag unit, passenger airbag unit and warning lamp. A self-test is run after the ignition is switched on. The warning lamp is activated during the self-test. If no faults are stored in the fault memory, the warning lamp will go out after approx. 5 seconds.

A maximum of 10 faults can be stored. The duration is also stored for the first 5 faults.

A differentiation is made between crash-relevant faults and non-crash relevant faults. Faults that are not crash-relevant are indicated by longer illumination of the warning lamp which will come on for approx. 2 minutes after the ignition is switched on. They will not affect the operation of the airbag system.

A crash-relevant fault is indicated by permanent illumination of the warning lamp after the ignition is switched on.

The triggering unit covers the following functions:

- Crash detection and determination of ignition point
- Ignition of the airbag system
- Recording of crash data
- Self-test and permanent monitoring of the airbag system
- Fault storage
- Fault display
- Fault output
- System readiness display

The triggering unit should be replaced only after the airbag has been triggered for the third time of if the fault memory cannot be erased anymore.

When replacing the triggering unit, use the System Tester to load the record for the respective vehicle and to lock the triggering unit.
The warning lamp starts to flash before the unit is locked. After the locking process has been completed successfully, the warning lamp goes off (unless a fault has occurred).

Tools

Tools required for troubleshooting:

1. System Tester 9288 in conjunction with adapter lead 9288/1

2. Special Tool 9516

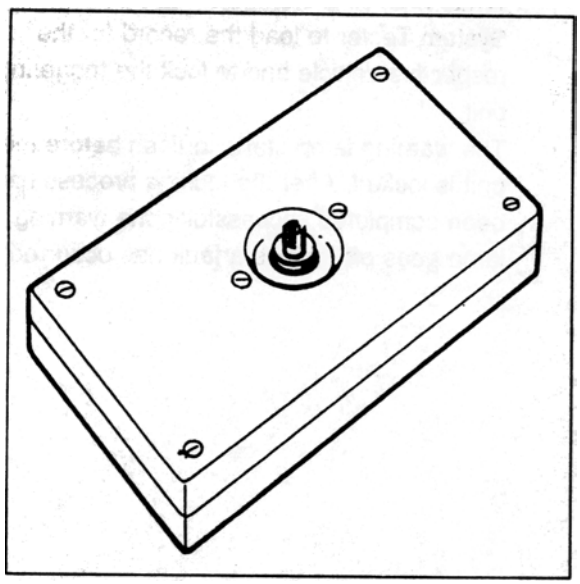

3. Special Tool 9566

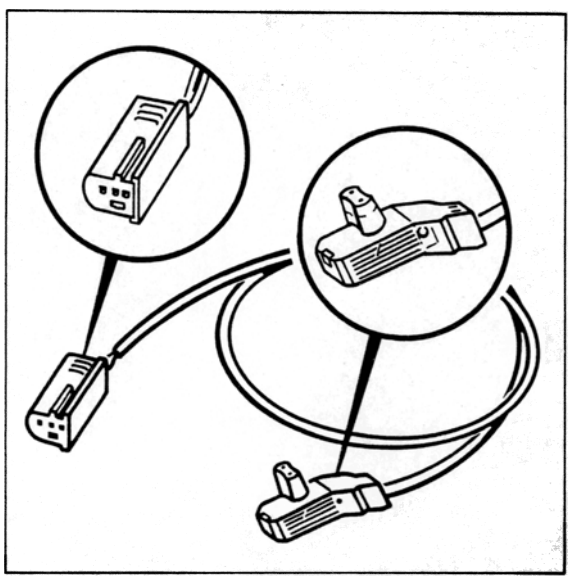

4. Commercially available digital multimeter

Note

The Special Tools are used to check the ignition pill circuits. **For safety reasons, never drive the vehicle when the Special Tools are connected insted of the airbag units.**

Triggering unit connector assignment

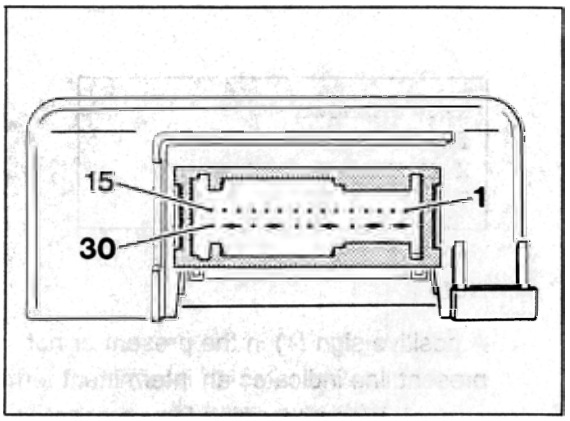

1838-68

- not used

2 - not used

3 - not used

4 - not used

5 - terminal 15

6 - terminal 31

7 - warning lamp

8 - not used

9 - K line

10 - ignition pill driver side, positive

11 - ignition pill driver side, negative

12 - not used

13 - ignition pill passenger side, positive

14 - ignition pill passenger side, negative

15 - not used

16/17 - Tab for opening the short-circuit jumper

18/19 - Tab for opening the short-circuit jumper

20 - Output terminal 15 DME

21/22 - Tab for opening short-circuit jumper

23 - not used

24 - not used

25/26 - Tab for opening the short-circuit jumper

27 - not used

28/29 - Tab for opening the short-circuit jumper

30 - not used

Fault memory

Overview of available displays

```
xx: Ignition circuit
driver
XXXXXXXXXXXXXXXXXXX
XXXXXXXXXXX    X
```

```
xx: Ignition circuit
passenger
XXXXXXXXXXXXXXXXXXX
XXXXXXXXXXX    X
```

```
xx: Supply
voltage
XXXXXXXXXXXXXXXXXXX
XXXXXXXXXXX    X
```

```
xx: Warning light
airbag
XXXXXXXXXXXXXXXXXXX
XXXXXXXXXXX    X
```

```
xx: Short circuit
ignition pills

XXXXXXXXXXX    X
```

```
xx: Control unit
fault
```

```
xx: Result
message

present
```

```
xx: Control unit
fault
X X X X X X X X
7 6 5 4 3 2 1 0
```

```
xx: Unknown
fault code
X X X X X X X X
7 6 5 4 3 2 1 0
```

Note

A positive sign (+) in the present or not present line indicates an intermittent terminal contact. When changing form present to not present, a counter is started. This counter shows how often the change from present to not present has occurred.

When a fault is detected, a start fault clock is started. The start fault clock indicates the hours, minutes and seconds since the fault has occurred for the first time.

When changing from present to not present, a stop fault clock is started. The stop fault clock indicates the time elapsed since the fault was no longer present. However, both clocks only count the time with the ignition on, i.e. the clocks are stopped when the ignition is switched off.

Fault overview

Test point	Fault code	Result of fault	Page
1	2	Fault memory	68 - 12
2	5	Fault memory	68 - 13
3	17	Fault memory	68 - 14
4	19	Fault memory (1	68 - 14
5	73	Fault memory	68 - 14
6	76	Fault memory cannot be erased (2	68 - 14
7	77	Fault memory cannot be erased (2	68 - 15
8	XX (3	Fault memory cannot be erased (2	68 - 15
9	XX	Fault memory	68 - 15

(1 Does not affect passenger protection. Will only be indicated by longer illumination of the warning lamp (approx. 2 mins.) after the ignition is switched on.

(2 Triggering unit must be replaced.

(3 Fault codes: 1, 6, 7, 12, 13, 14, 15, 16, 18, 23, 48, 49, 50, 51, 52, 53, 54, 55, 56, 57, 58, 59, 60, 61, 62, 63, 65, 67, 68, 69, 70, 71, 72.

Fault, Fault code	Possible Causes, Elimination, Remarks

Test point 1

Driver ignition circuit leakage resistance / short to ground or leakage resistance / short to positive or above threshold or below threshold

Fault code 2

1. Remove driver airbag.

2. Connect Special Tool 9516 instead of airbag unit.

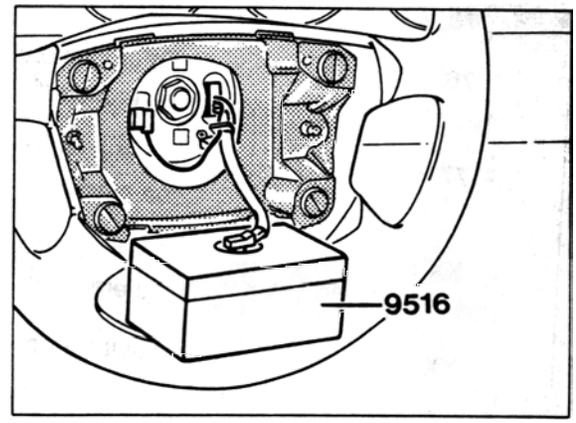

1839-68

3. Erase fault memory.

4. Check if fault is displayed again.

a) If fault does not appear again, replace the airbag unit.

b) If the fault appears again, disconnect the plug connection to the contact unit and attach the special tool 9516/1.

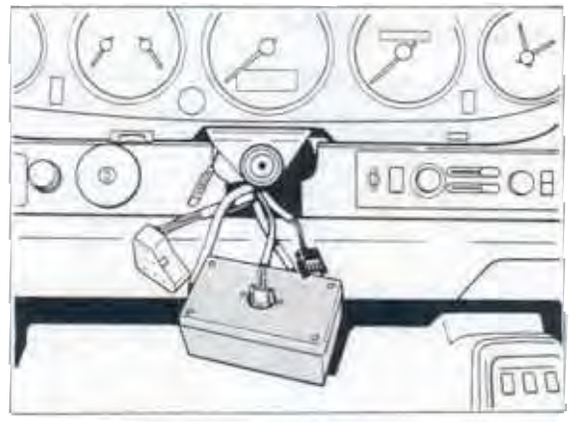

5869-68

Fault, Fault code	Possible Causes, Elimination, Remarks
	5. Erase fault memory. 6. Check if fault is displayed again. a) If fault is not displayed anymore, replace contact unit. b) If fault is displayed again, check wiring harness for signs of crushing and chafing. c) If no fault is detected in the wiring harness, replace triggering unit.

Test point 2

Passenger ignition circuit leakage resistance / short to ground or leakage resistance / short to positive or below threshold or above threshold

Fault code 5

1. Disconnect connector from passenger airbag unit.

2. Connect Special Tool 9516 combined with Special Tool 9566.

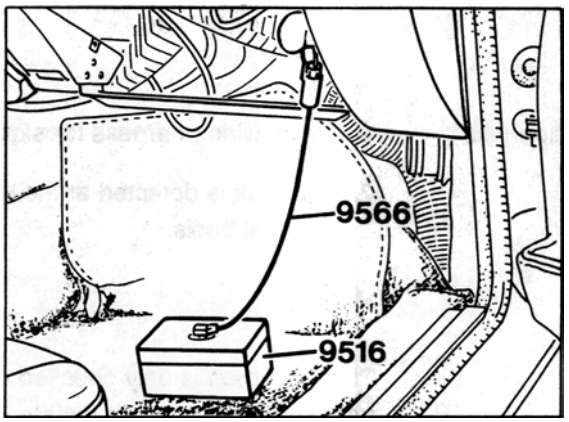

1840-68

3. Erase fault memory.

4. Check if fault is displayed again.
   a) If fault is not displayed anymore, replace passenger airbag unit
   b) If fault is displayed again, check wiring harness for signs of crushing and chafing.
   c) If no fault is detected at the wiring harness, replace triggering unit.

Fault, Fault code	Possible Causes, Elimination, Remarks
Test point 3 Supply voltage below threshold **Fault code 17**	1. Check battery or generator. 2. Check plug-in connector at triggering unit for corrosion.
Test point 4 Airbag warning light leakage resistance / short to positive or open circuit **Fault code 19**	1. Check fuse for voltage supply of monitoring and warning lamps lamps in clock. 2. Check bulb, replace if required. 3. Check wire from triggering unit pin 7 to warning lamp for continuity or short to positive.
Test point 5 Short circuit ignition pills **Fault code 73**	1. Check wiring harness for signs of crushing and chafing. 2. If no fault is detected at the wiring harness, replace triggering unit on a trial basis. **Note** This fault path is only checked during the self-test of the triggering unit, i.e. the fault is not updated during the cyclic tests. The fault is always output as being not present, even if the fault is present. As of **module version 6.0**, the not present condition is no longer indicated. When the fault memory is erased, the ignition must be switched off and back on to check the fault path. This is the only way to start another self-test.
Test point 6 Control unit fault **Fault code 76**	Replace triggering unit.

Fault, Fault code	Possible causes, remedies, notes
Test point 7	
Result message **Fault code 77**	Replace triggering unit.
Test point 8	
Control unit fault X X X X X X X X(1 **Fault code XX**(2	Replace triggering unit.
Test point 9	
Unknown fault code X X X X X X X X(1 **Fault code XX**	1. Check secondary side of ignition. 2. Erase fault memory.

(1 - Display of fault type byte

(2 - Possible fault codes
Refer to page 68 - 11

Coding

In the "Coding" menu item, the vehicle type, the record version and the equipment may be read out.
In addition, you can also read out where the triggering unit was locked.

```
Locked by:
XXXXXXXXXXXXXXXXXXX(1
Manufacturer:
XXXXXXXXXXXX(2          >
```

(1 Porsche or
Development Dept. or
workshop or
not locked or
unknown

(2 Porsche or
unknown

Note

The airbag warning lamp flashes as long as the triggering unit is not locked. The triggering unit must then be locked under the "Lock" menu item.

```
< Vehicle type:
XXXXXXXXXXXXXXXXXXX(3
Database version:
10 (Hex)                >
```

(3 911 Carrera (993) or
unknown

```
< Equipment:
XXXXXXXXXXXXXXXXXXX(4

Return:                 N
```

(4 Driver/passenger or
unknown

Note

The following display appears when key 1 (additional information) is pressed:

```
B6D9: XX    B6E1: XX
B6DC: XX    B638: XX
B6E0: XX    B639: XX
zurück:                 N
```

It contains the memory contents of the respective addresses.

Lock

The "Lock" menu item allows an unlocked triggering unit to be locked.
A locked triggering unit can**not be unlocked** anymore.
The airbag warning lamp flashes if the triggering unit is not locked. The triggering unit must then be locked.
The spare triggering units are supplied unlocked.

```
Lock
airbag?
1 = Yes
3 = No
```

Press key 1.
If no fault is present, the following display appears after a short time:

```
Airbag
was locked

Return:                N
```

The locking operation is now completed.

The following fault displays may appear if a fault condition occurs:

```
Airbag was
already locked
XXXXXXXXXXX(1
Return:                N
```

(1 Porsche or
workshop or
Development Dept.

```
No Porsche
control unit
xx (Hex)
Return:                N
```

```
Incorrect
vehicle type
xx (Hex)
Return:                N
```

```
Incorrect
database version
xx (Hex)
Return:                N
```

```
Incorrect
equipment
xx (Hex)
Return:                N
```

If a fault occurs, the triggering unit cannot be locked. Replace triggering unit in those cases.

Results

Crash data may be read out under the "Results" menu item. A maximum of three results may be stored. Each result includes 13 bytes. The triggering unit must be replaced after the third result has occurred as the air-bag warning lamp will then light continuously and the results cannot be erased.

68 01

Diagnosis / Troubleshooting

Airbag

System B 03

Contents overview

	Page
General instructions	68
Menu (overview of possible menus)	68
Component arrangement	68
unction individual components	68 24
System description	68 25
	68 26
Connector assignment, triggering unit	68 27
ault memory (overview of the possible displays)	68 28
Fault overview	68 29
	68 34
Locking	68
heckin the coding	68 36
Changing the coding	68 37

General instructions

The airbag system is constantly monitored by a diagnosis unit in the triggering unit. Any fault is signalled by a warning light.

The central warning light and the warning lamp for the airbag system light up in the event of a fault.

The airbag warning light lights for approx. 5 seconds after the ignition is switched on and goes out if no fault has been entered in the fault memory.

If it lights up again, this indicates a fault in the system. The fault can be read out with the System Tester 9288. **If the fault is not relevant to crash protection, the warning light is not triggered continuously but only for approx. 2 minutes.**

Note

A period of 10 seconds is required to enable the triggering unit to identify all faults in the system. In order to guarantee that every possible fault source is checked during the vehicle check, the ignition must be switched on for at least 10 seconds.

The fault memory must be cleared following a fault in the airbag system and after it has been remedied.

The replacement of a component must be noted in the Guarantee and Maintenance booklet. To do this, attach the documentation number in a free panel intended for that purpose. The documentation number is attached to the replacement part as a sticker.

The following components must be removed and replaced following an accident in which the airbag system was triggered:

Contact unit

Triggered airbag unit(s).

Printed in Germany – 22. 1997

Menu

Overview of the possible menus

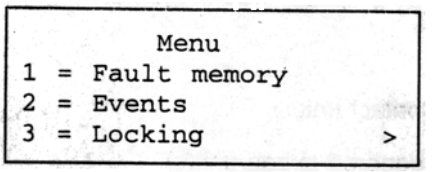

Fault memory: see Page 68 - 28

Events: see Page 68 - 34

Locking: see Page 68 - 35

Checking the coding: see Page 68 - 36

Changing the coding: see Page 68 - 37

Note

Observe the safety regulations when working on the airbag system (Volume V, Pages 68 - 7 to 68 - 8).

Component arrangement

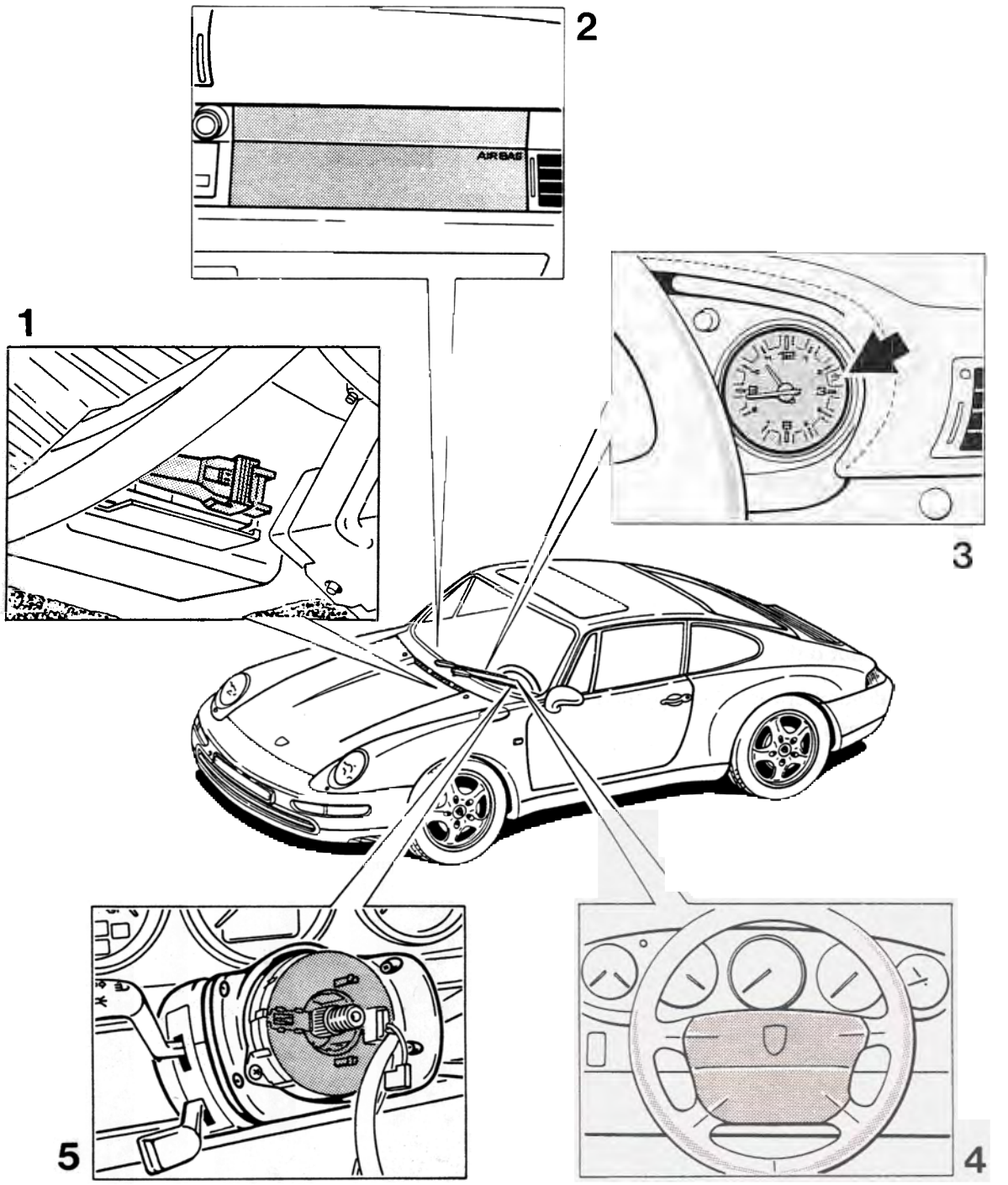

Printed in Germany – 22, 1997

Function, individual components

Triggering unit

Processes the incoming signals and triggers the airbag system when an accident is identified (also see "System description").

2. Passenger's airbag unit

Contains the airbag and the gas generator for the passenger.

3. Warning light

– System readiness indicator.

– Fault indication.

4. Driver's airbag unit

Contains the airbag and the gas generator for the driver.

5. Contact unit

Connection between the triggering unit and driver's airbag unit.

System description

The airbag system consists of the following components: Triggering unit, contact unit, driver's airbag unit, passenger's airbag unit and the warning light. A system self-test is performed after the ignition is switched on. The warning light is switched on during the self-test. If no faults are stored in the fault memory, the warning light goes out after approx. 5 seconds.

Up to max. 10 faults can be stored. The duration is additionally stored for the first 5 faults.

A distinction is made between crash-relevant and non-crash-relevant faults. Non-crash-relevant faults are indicated by the warning light being illuminated for a longer period of approx. 2 seconds after the ignition is switched on. This does not affect the function of the airbag system.

A crash-relevant fault is indicated by continuous illumination of the warning light after the ignition is switched on.

The triggering unit has the following functions:

- Crash recognition and triggering time determination
- Ignition of the airbag system
- Recording of the crash data
- Self-test and permanent monitoring of the airbag system
- Fault storage
- Fault display
- Fault output
- System readiness display

The triggering unit must be replaced only after the third time the airbag is triggered or if the fault memory can no longer be cleared.

If the triggering unit is exchanged, the data record for the appropriate vehicle must be loaded with the System Tester and the triggering unit must be locked.

The warning light flashes before locking. The warning light goes out following locking (if no fault is present).

Printed in Germany – 22. 1997

Tools

The following are required for troubleshooting:

1. **System Tester 9288 in combination with adapter lead 9288/1**

2. **Special tool 9516**

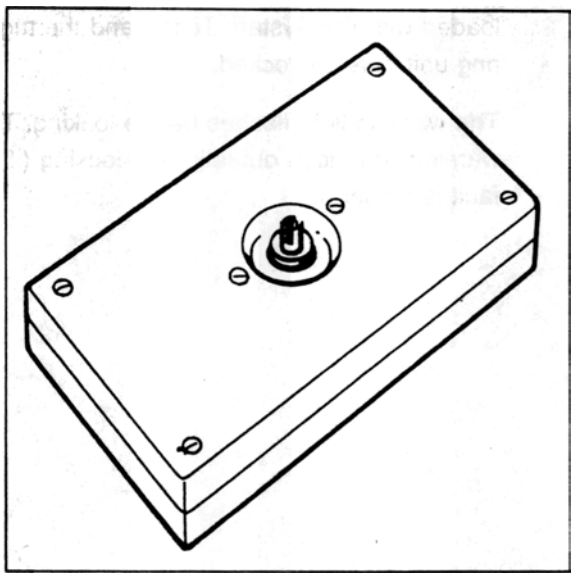

3. **Special tool 9516/1**

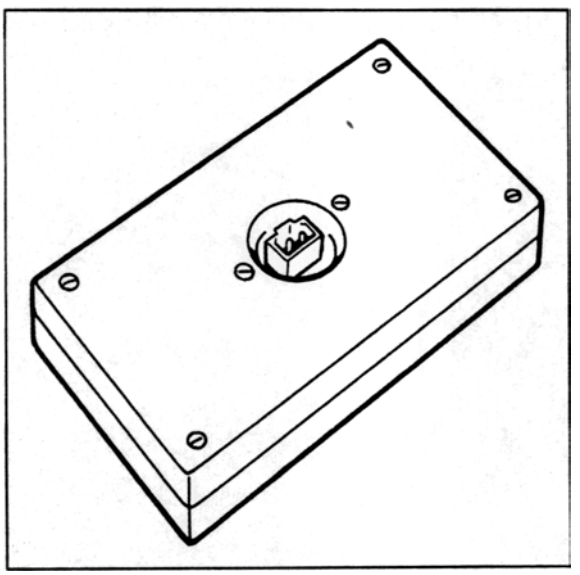

4. **Special tool 9566**

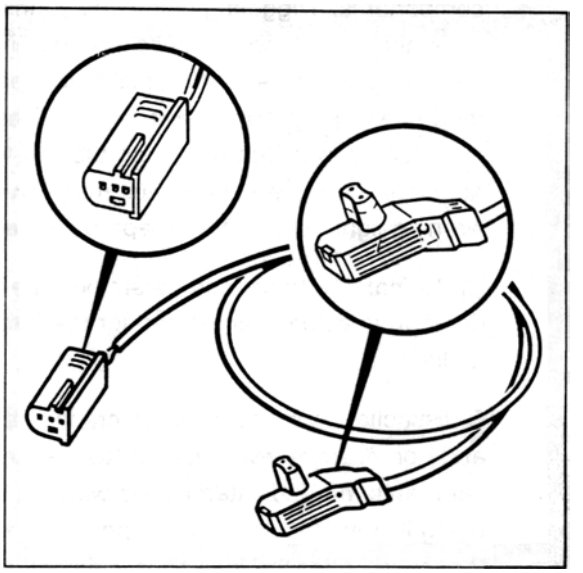

5. **Commercially available digital multimeter**

Note

The special tools are used to check the ignition pill circuits. **For safety reasons, it is not permissible to drive with special tools attached instead of the airbag units.**

Connector assignment

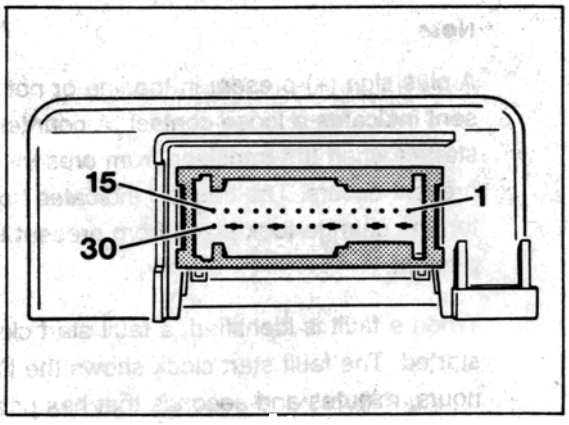

1 - Free

2 - Free

3 - Free

4 - Free

5 - Terminal 15

6 - Terminal 31

7 - Warning light

8 - Free

9 - K-wire

10 - Driver's ignition pill, positive

11 - Driver's ignition pill, negative

12 - Free

13 - Passenger's ignition pill, positive

14 - Passenger's ignition pill, negative

15 - Free

16/17 - Lug for opening the short circuit bridge

18/19 - Lug for opening the short circuit bridge

20 - Output, terminal 15 ECM

21/22 - Lug for opening the short circuit bridge

23 - Child seat detection

24 - Free

25/26 - Lug for opening the short circuit bridge

27 - Free

28/29 - Lug for opening the short circuit bridge

30 - Free

Fault memory

Overview of the possible displays

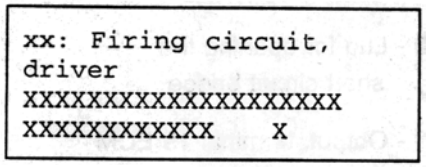

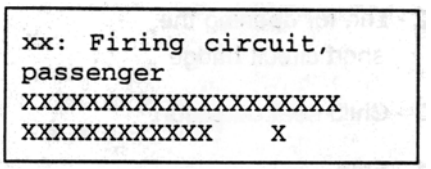

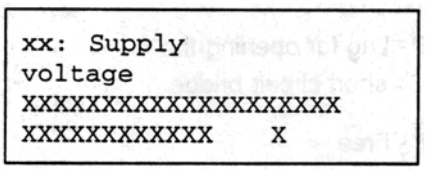

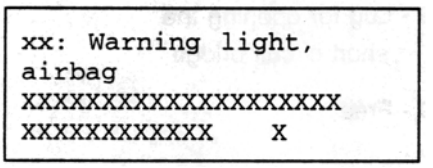

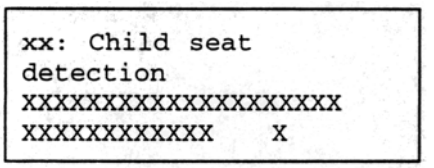

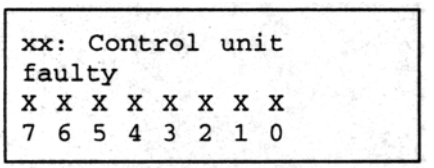

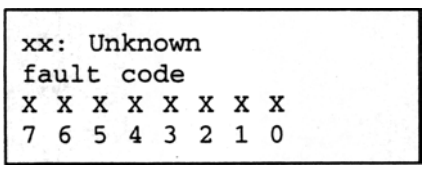

Note

A plus sign (+) present in the line or not present indicates a loose contact. A counter is started when the transition from present to not present occurs. The counter indicates how often the change took place from present to not present.

When a fault is identified, a fault start clock is started. The fault start clock shows the time in hours, minutes and seconds that has passed since the fault first occurred.

When a changeover occurs from present to not present, a fault stop clock is started. The fault stop clock shows the time that has passed since the fault was no longer present. However, with both clocks, only ignition On times are counted. This means that the clocks are stopped when the ignition is switched off.

Fault overview

Test point	Fault code	Fault effect	Page
1	04, 05, 20, 21, 36	Fault memory	68 - 30
2	10, 11, 26, 27, 39	Fault memory	68 - 31
3	03	Fault memory ①	68 - 32
4	01, 02	Fault memory ②	68 - 32
5	70, 71, 72, 73	Fault memory	68 - 32
6	≥100	Fault memory ③	68 - 32
7	XXX	Fault memory	68 - 33

① The warning light is on as long as the limit value is exceeded or not reached.

② This does not influence passenger protection. It is only indicated by longer activation of the warning light (approx. 2 min.) after the ignition is switched on.

③ The triggering unit must be replaced.

Note

Check the coding if faults appear that are not described here.
Incorrect coding can cause faults to be indicated that are not really present. Coding must take place according to the vehicle equipment.

Fault, fault code	Possible causes, elimination, notes

Test point 1

Firing circuit, driver
Fault codes 04, 05, 20, 21, 36

1. Remove the driver's airbag unit.

2. Attach the special tool 9516 instead of the airbag unit.

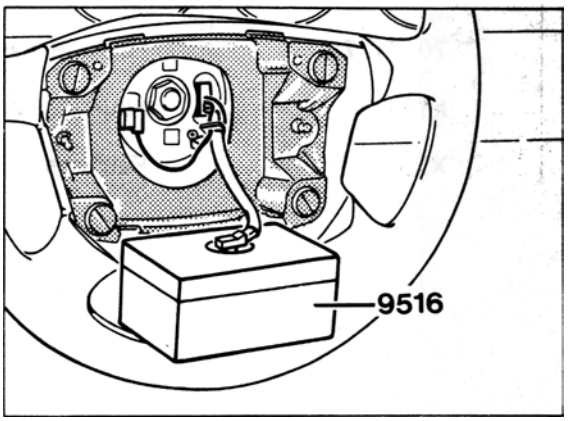

1839 - 68

3. Clear the fault memory.

4. Check whether the fault appears again.
   a) If the fault does not appear again, replace the airbag unit.
   b) If the fault appears again, disconnect the plug connection to the contact unit and attach the special tool 9516/1.

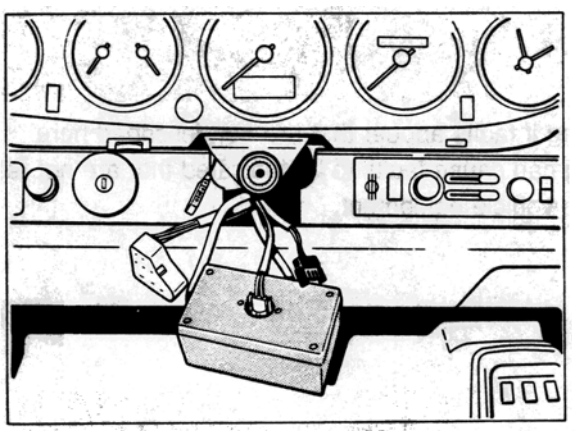

586 - 68

Fault, fault code	Possible causes, elimination, notes

5. Clear fault memory.

6. Check whether the fault appears again.
   a) If the fault does not appear again, replace the contact unit.
   b) If the fault appears again, check the wiring harness for pinches and chafing damage.
   c) If no fault is found on the wiring harness, replace the triggering unit.

Test point 2

Firing circuit, passenger
Fault codes 10, 11, 26, 27, 39

1. Disconnect the plug connection to the passenger's airbag unit.

2. Attach the special tool 9516 in combination with special tool 9566.

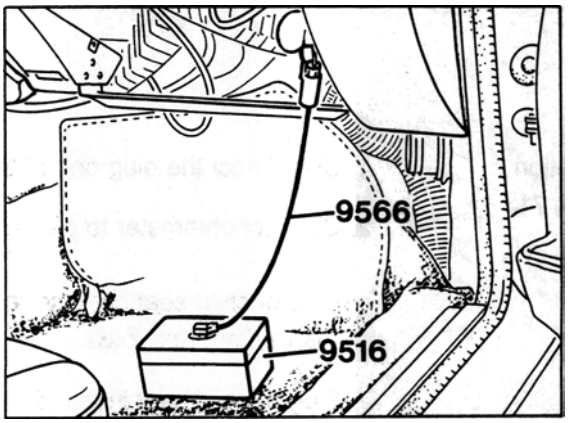

3. Clear the fault memory.

4. Check whether the fault appears again.
   a) If the fault does not appear again, replace the passenger's airbag unit.
   b) If the fault appears again, check the wiring harness for pinches and chafing damage.
   c) If no fault is found on the wiring harness, replace the triggering unit.

Fault, fault code	Possible causes, elimination, notes

Test point 3

Supply voltage
Fault code 03

1. Inspect the battery and generator.
2. Inspect the plug connection on the triggering unit for corrosion.

Test point 4

Warning light, airbag
Fault code 01, 02

1. Inspect the fuse for the supply voltage to the indicator and warning lights in the clock.
2. Inspect the bulb and replace it if necessary.
3. Inspect the line from the triggering unit pin 7 to the warning light for continuity and short circuit to positive.

Test point 5

Child seat detection
Fault codes 70, 71, 72, 73

1. Disconnect the plug on the triggering unit.
2. Connect ohmmeter to plug, pin 23 and ground.

   Plug of child seat not inserted.
   Display: approx. 2 kΩ

   Plug of child seat inserted.
   Display: approx. 260 Ω
3. Inspect the wiring harness to the triggering unit for pinches and chafing damage.

Test point 6

Control unit faulty
Fault code≥100

Replace triggering unit.

Fault, fault code	Possible causes, elimination, notes
Test point 7	
Unknown fault code X X X X X X X X ① **Fault code XXX**	1. Inspect the ground points for corrosion. 2. Inspect the ignition on the secondary side. 3. Clear the fault memory.

① - Representation of the fault type byte

Printed in Germany – 22. 1997

Events

Crash data can be read out under the menu item "Events". Up to max. three events can be saved. Each event covers 16 bytes. The triggering unit must be replaced after the third event, since the airbag warning light lights up continuously and the events cannot be deleted.

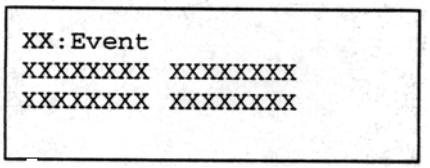

Printed in Germany 03.1997

Locking

An unlocked triggering unit can be locked under the menu item "Locking".
A locked triggering unit **cannot be unlocked again**.
If a triggering unit is unlocked, the airbag warning light flashes. The triggering unit must then be locked.
Replacement triggering units from the parts service are supplied unlocked.

```
Lock
airbag?
1 = yes
3 = no
```

Press key 1.
If there is no fault, the following message is displayed after a brief waiting time:

```
Airbag
was locked

return:              N
```

This ends locking.

The following messages can be displayed in a fault state:

```
Airbag was
already locked
XXXXXXXXXXX ①
return:              N
```

① Porsche or workshop or development

```
Not a Porsche
control unit
xx (hex)
return:              N
```

```
Wrong
vehicle type
xx (hex)
return:              N
```

```
Wrong
data record version
xx (hex)
return:              N
```

```
Wrong
equipment
xx (hex)
return:              N
```

Note

In the event of a fault, the triggering unit cannot be locked.

Check the vehicle type and equipment and correct if necessary.

Replace the triggering unit if necessary.

Checking the coding

Under the menu item "Checking the coding", the vehicle type, data record version and the equipment can be read out.
Also, it is possible to read out where the airbag triggering unit was locked.

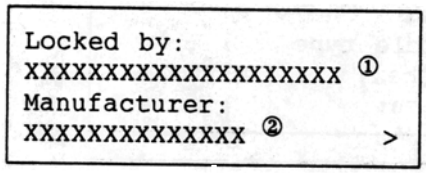

① Porsche or
development or
workshop or
not locked or
unknown

② Porsche or
unknown

Note

The airbag MIL flashes for as long as the triggering unit is not locked. The triggering unit then has to be locked under menu item "Lock".

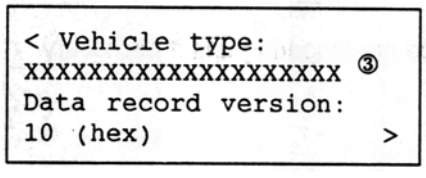

③ 911 Carrera (993) or
unknown

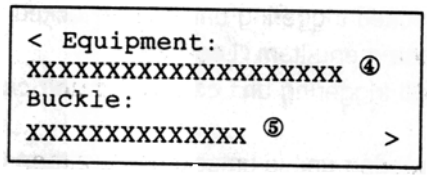

④ Driver/passenger or
unknown or
driver

⑤ activated or
not activated

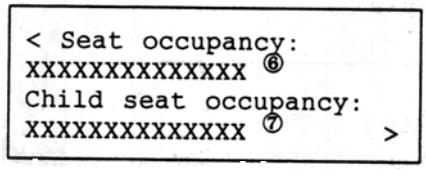

⑥ activated or
not activated

⑦ activated or
not activated

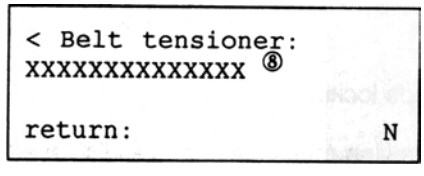

⑧ activated or
not activated

Note

The belt buckle, seat occupancy detection and belt tensioner should **not be activated**, as otherwise faults will be stored in the fault memory.

Changing the coding

Under the menu item "Changing the coding", you can adapt the airbag triggering unit to the vehicle equipment.

The following equipment versions can be coded:

```
Changing the coding
1 = Driver/passenger
2 = Buckle
3 = Seat occupancy    >
```

```
< Changing the coding
1 = Child seat occupancy
2 = Belt tensioner
```

The following messages appear after selection of the corresponding equipment version:

```
Driver/passenger
1 = * Driver/passenger
2 =   Driver
return                N
```

```
Buckle
1 =   active
2 = * not active
return:               N
```

```
Seat occupancy
1 =   active
2 = * not active
return:               N
```

```
Child seat occupancy
1 =   active
2 = * not active
return:               N
```

```
Belt tensioner
1 =   active
2 = * not active
return:               N
```

Note

The asterisk shows the currently coded version.

80 01

Diagnosis / Troubleshooting

Heater System

System H 05 / H 06

Contents

	Page
General information	80 - 3
Menu (Overview of available menus)	80 - 4
Component layout	80 - 5
Operation of individual components	80 - 6
System description	80 - 8
Tools	80 - 10
Connector pin assignment of heater /A/C regulator	80 - 11
Fault memory (Overview of available displays)	80 - 13
Fault overview	80 - 15
Drive links	80 - 23
Input signals	80 - 24
Actual values	80 - 25

General information

System H 05: Heater control

System H 06: A/C control

Canceling the diagnostics

The diagnostic operation is canceled or cannot be started, respectively, if the following conditions are present:

1. Vehicle speed > 0 km/h
2. Right-hand mixing chamber temperature > 80° C
3. Left-hand mixing chamber temperature > 80° C
4. Rear fan temperature > 95° C
5. Oil temperature > 105° C

Coasting shutoff

Coasting shutoff in the DME is prevented if the temperature mixing flaps are more than 90% open.

Fault memory

Fault not present

If "Fault not present" is displayed, this may be caused by a poor terminal connection. If this is the case, check the fault path for poor connections, clear the fault memory and test drive the vehicle. If the fault occurs again, replace the components affected.
If the fault does not occur again, it may be assumed that it was just an intermittent fault.

Switching on the A/C compressor

The compressor is not switched on until 10 seconds after the A/C system has been switched on.

Switching on the condenser blower

The condenser blower is not switched on until 10 seconds after the A/C system has been switched on.

Menu

Overview of available menus

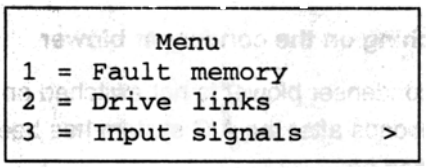

Fault memory: See page 80 - 13

Drive links: See page 80 - 23

Input signals: See page 80 - 24

Actual values: See page 80 - 25

Component layout

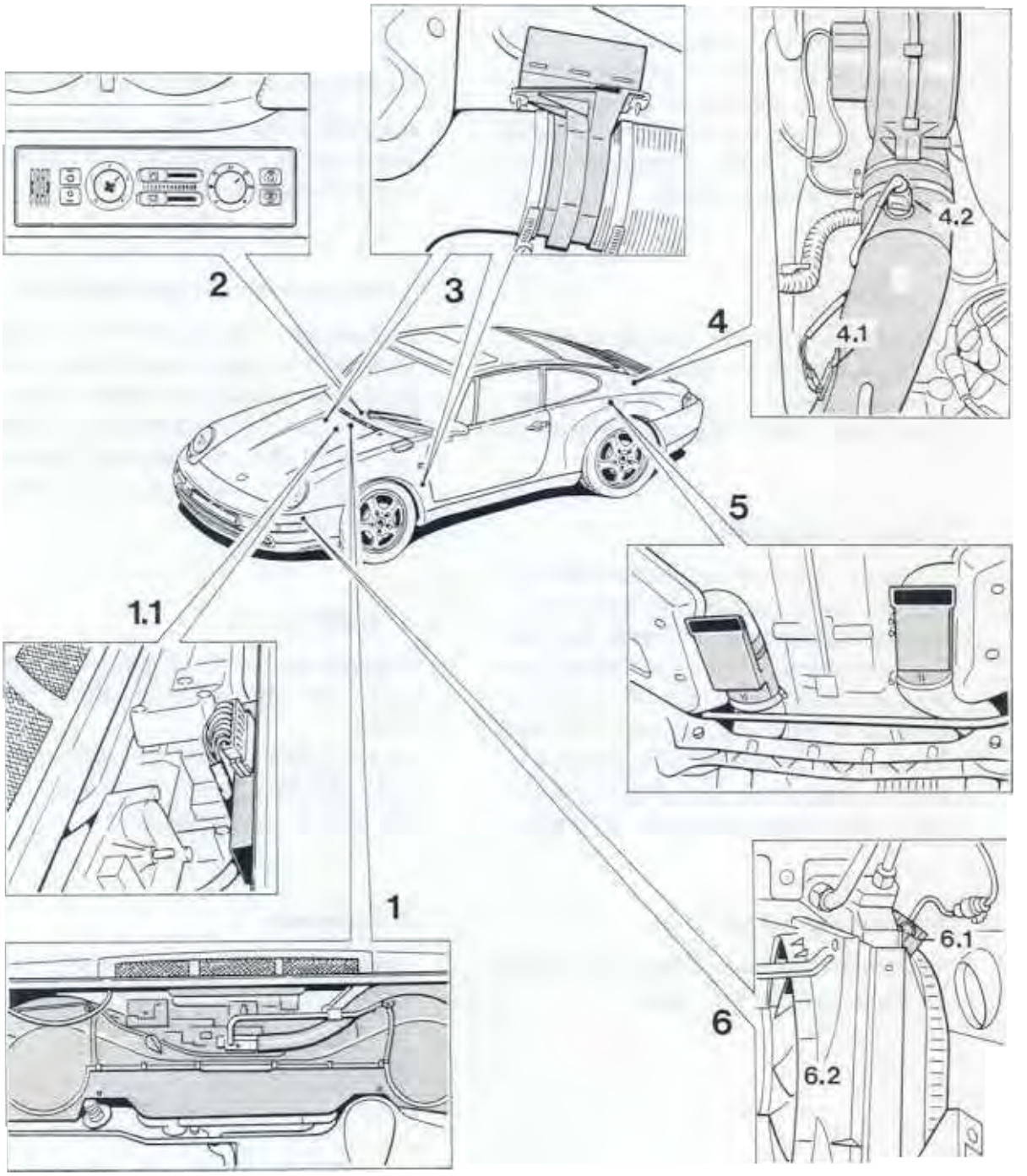

Printed in Germany – VI,1994

Operation of individual components

1. Heater/ A/C unit

The heater/ A/C unit includes the fresh-air, bypass air, defroster and footwell flaps, the two blowers and particle filters and the evaporator (on vehicles fitted with A/C system). In the heater/ A/C unit, the heating/air conditioning regulator mixes and distributes fresh air, cold air (on vehicles with A/C system) and hot air according to the preset values.

1.1 Final stage

The final stage connects the heater units to ground. Ground signals are clocked with a frequency of 30 Hz. The speed of the heater blowers is determined by the pulse-to-pause ratio.

2. Heater/ A/C regulator

The heater /A/C regulator includes the closed-loop and open-loop control electronics, the interior sensor complete with blower as well as a number of potentiometers and switches that are used to actuate the flaps. The heater/ A/C regulator controls the setting of the individual flaps in accordance with the temperature preset at the potentiometer, interior temperature, vehicle speed and hot air temperature.

3. Temperature mixing flaps

The temperature mixing flaps are used to control the supply (quantity) of hot air.

4. Auxiliary blower

At low engine speeds, the auxiliary blower ensures supply of sufficient air and provides a resistance at higher engine speeds. This produces an air mass map that facilitates temperature control.

4.1 Temperature sensor for auxiliary blower

A variable resistor (NTC) used to detect the engine cooling air temperature. It is used to control the auxiliary blower.

4.2 Series resistor for auxiliary blower

Reduces the blower speed of the first stage. A built-in bimetal fuse protects the series resistor against overloads. If the bimetal fuse is triggered, a restart interlock prevents overloading the resistor after it has cooled off. This allows the cause for any overload, e.g. a binding blower, to be detected.

5. Heater flap box

Excess hot air that is not required is evacuated to the outside across the heater flap boxes.
To keep exhaust fumes from entering the system, the outlet openings are fitted with rubber flaps that close automatically.

6. Condenser

Transforms the gaseous refrigerant into a fluid state.

6.1 Condenser blower

This blower is used to cool down the refrigerant.

6.2. Series resistor for condenser blower

Reduces the blower speed of the first stage.

Printed in Germany – VI.1994

System description

The heater/ A/C unit is located in the front end of the vehicle. The heater/ A/C unit is used to mix fresh air, cold air (for vehicles fitted with M 573) and hot air in one left and right-hand blower each and to distribute it across air ducts. The use of one left-hand and one right-hand blower is dictated by the horizontally opposed engine design with heat exchangers on the left and right vehicle sides. The hot air is supplied towards the front to the blowers in the heater/ A/C unit across one left and one right-hand heater duct.
The blowers are located on the intake side.
The fresh-air inlet of the heater/ A/C unit is fitted with one speed-dependent fresh-air mixing flap and one fresh-air flap controlled by the blower stage setting. Both the left and the right heater ducts in the footwell are fitted with one temperature mixing flap each. With the exception of the bypass air flap, all flaps are controlled by electrical servo motors and linkages.

Hot air treatment

The air is aspirated by the engine cooling fan across the air inlet grille at the engine compartment lid and is then supplied to the heat exchangers by a downstream (electrical) auxiliary blower. The air that is preheated when it passes the cylinder surface is heated further inside the heat exchangers.
To prevent excessive heat buildup in the sill area in the summer period, the hot air is evacuated to the outside across heater flap boxes that are controlled by differential pressure.
To avoid drawing in exhaust fumes when driving in reverse, the temperature mixing flaps are moved to the"max. cold" position when reverse is engaged.

Heater / A/C regulator

The entire electronic regulating system is built into the heater/ A/C regulator. Temperature sensors detect the temperatures of the exiting air flow and of the interior and compare them to the settings. Modifying the position of the temperature mixing flaps allows the interior temperature to be regulated.
In addition, the heater/ A/C regulator houses the following components:

- Slide potentiometer to control the defroster flap and the footwell flaps
- Rotary potentiometer to control the blower speed
- AC switch for switching on the A/C system (M 573 only)
- Max-AC switch (M 573 only)
- Recirculating air switch
- Defroster switch

Note

The A/C compressor is not activated until 10 seconds after the A/C system has been switched on.

Function of Max-AC switch

- Switching on the A/C system
- Defroster flap closed
- Footwell flaps closed
- Center nozzle open
- Temperature specification set to max. cold setting
- Blower stage 4

If both AC switches are pressed simultaneously, the Max-AC switch takes priority.

Conditions for switching on the auxiliary blower

With the ignition switched on, the auxiliary blower is switched on and off depending on the setting of the temperature mixing flaps. In the heating mode, blower control is dependent on the blower potentiometer:

1st stage - 0,3 to < 2
2nd stage - 2,0 to 4

When the temperature mixing flaps are closed, the system is controlled in accordance with the air temperature at the temperature sensor:

1st stage on: 45° C
off: 40° C

2nd stage on: 62° C
off: 57° C

When the ignition is off, control is dependent on the air temperature at the temperature sensor.

1st stage on: 75° C
off: 70° C

Printed in Germany – VI.1994

Tools

The following tools are required for trouble-shooting:

1. **System Tester 9288 in conjunction with adapter lead 9288/1.**

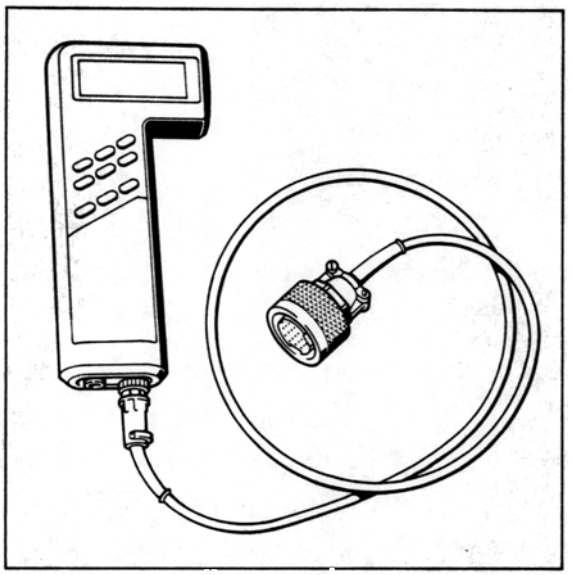

855 - 03

2. **Standard digital multimeter.**

Connector pin assignment of heater/ A/C regulator

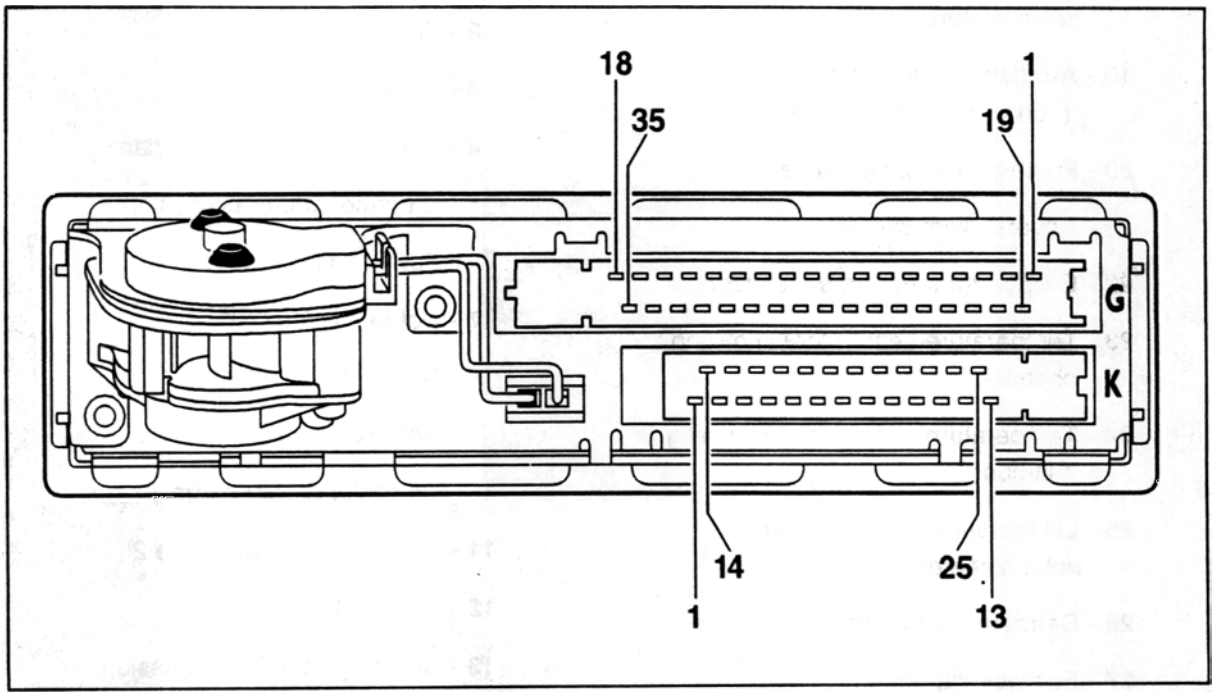

1899 - 80

G Connector

1 - Auxiliary blower diagnosis (Turbo: Left-hand side)*

2 - Not used

3 - Blower final stage diagnosis

4 - Not used

5 - Not used

6 - Not used

7 - Condenser blower diagnosis

8 - RH temperature mixing flap potentiometer

9 - Oil cooler blower diagnosis

10 - Auxiliary blower temperature sensor

11 - Not used

12 - Oil temperature sensor

13 - Positive supply to potentiometer for servo motors

14 - K wire

15 - Speedometer signal

16 - Not used

17 - Terminal 58d

* A jumper between G 1 and G 19 is fitted in the wiring harness of the 911 Carrera.

18 - Ground supply to potentiometer for servo motors

19 - Auxiliary blower diagnosis (Turbo: Right-hand side)*

20 - Fresh-air flap potentiometer

21 - Reverse light switch

22 - Evaporator temperature sensor

23 - Temperature sensor for LH mixing chamber

24 - Temperature sensor for RH mixing chamber

25 - LH temperature mixing flap potentiometer

26 - Defroster flap potentiometer

27 - Footwell flap potentiometer

28 - Not used

29 - Terminal X

30 - Not used

31 - RH blower

32 - L wire

33 - Not used

34 - LH blower

35 - Terminal 15

* A jumper between G 1 and G 19 is fitted in the wiring harness of the 911 Carrera.

K Connector

1 - Terminal 31

2 - Terminal 30

3 - Fresh-air flap

4 - RH temperature mixing flap

5 - LH temperature mixing flap

6 - Footwell flap

7 - Not used

8 - Not used

9 - Not used

10 - Oil cooler blower stage 1

11 - Condenser blower stage 2

12 - Not used

13 - Coasting shutoff suppression

14 - Defroster flap

15 - Defroster flap

16 - Fresh-air flap

17 - RH temperature mixing flap

18 - LH temperature mixing flap

19 - Footwell flap

20 - Auxiliary blower stage 1

21 - Not used

22 - Oil cooler blower stage 2

23 - Condenser blower stage 1

24 - A/C compressor magnetic clutch

25 - Auxiliary blower stage 2

Fault memory

Overview of available displays

xx: Inside temp. sensor
XXXXXXXXXXXXXXXXXXX
XXXXXXXXXXXX

xx: Left mixing chamber temp. sensor
XXXXXXXXXXXXXXXXXXX
XXXXXXXXXXXX

xx: Right mixing chamber temp. sensor
XXXXXXXXXXXXXXXXXXX
XXXXXXXXXXXX

xx: Evaporator temp. sensor
XXXXXXXXXXXXXXXXXXX
XXXXXXXXXXXX

xx: Rear blower temp. sensor
XXXXXXXXXXXXXXXXXXX
XXXXXXXXXXXX

xx: Oil cooler temp. sensor
XXXXXXXXXXXXXXXXXXX
XXXXXXXXXXXX

xx: Defroster flap motor
Signal unplausible
XXXXXXXXXXXX

xx: Footwell flap motor
Signal unplausible
XXXXXXXXXXXX

xx: Fresh-air flap motor
Signal unplausible
XXXXXXXXXXXX

XX: Left mixing flap motor
Signal unplausible
XXXXXXXXXXXX

XX: Right mixing flap motor
Signal unplausible
XXXXXXXXXXXX

XX: Left heater blower motor
Signal unplausible
XXXXXXXXXXXX

XX: Right heater blower motor
Signal unplausible
XXXXXXXXXXXX

XX: Condenser blower motor seized
XXXXXXXXXXXX

XX: Oil cooler blower motor seized
XXXXXXXXXXXX

XX: Rear blower motor - Stage 1 seized
XXXXXXXXXXXX

XX: Rear blower motor - Stage 2 seized
XXXXXXXXXXXX

Printed in Germany – VI,1994

XX: Inside sensor motor Signal unplausible XXXXXXXXXXXX
XX: Rear blower motor - Stage 1 seized XXXXXXXXXXXX
XX: Rear blower motor - Stage 2 seized XXXXXXXXXXXX
XX: Unknown fault code

Printed in Germany – VI.1994

Fault overview

Test point	Fault code	Effect of fault	Page
1	—		80 - 16
2	11	Fault memory, replacement value 35° C	80 - 16
3	12	Fault memory, replacement value*	80 - 16
4	13	Fault memory, replacement value*	80 - 16
5	14	Fault memory	80 - 17
6	15	Fault memory**	80 - 17
7	16	Fault memory	80 - 17
8	22	Fault memory	80 - 18
9	23	Fault memory	80 - 18
10	24	Fault memory	80 - 19
11	31	Fault memory	80 - 19
12	32	Fault memory	80 - 20
13	33	Fault memory	80 - 20
14	34	Fault memory	80 - 20
15	41	Fault memory	80 - 21
16	42	Fault memory	80 - 21
17	43/46	Fault memory	80 - 21
18	44/47	Fault memory	80 - 22
19	45	Fault memory	80 - 22
20	XX	Fault memory	80 - 22

If a mixing chamber temperature sensor fails, the value of the remaining sensor is assumed. If both sensors fail, a mixing flap angle of 40 % is pre-set.

Both heater blowers are switched off when the temperature mixing flaps are not in the max. cool position.

Fault, fault code	Possible causes, remedy, notes

Test point 1

Supply voltage

At heater / A/C regulator
- K 1 - Terminal 31
- K 2 - Terminal 30
- G 29 - Terminal X
- G 35 - Terminal 15
- G 17 - Check terminal 58 d (lights).

Test point 2

Inside temp. sensor
Short to ground or open circuit/short to ground or open circuit
Fault code 11

Replace heater/ A/C regulator.

Test point 3

Left mixing chamber temp. sensor
Short to ground or open circuit/short to ground or open circuit
Fault code 12

1. Check resistance between G 18 and G 23.
   Specifications: at 0° C 30.6 to 34.7 kΩ
   at 25° C 9.5 to 10.5 kΩ
   at 50° C 3.4 to 3.8 kΩ
2. Ground must be present at G 18 when the connector is connected.
3. G 23 must not be connected to ground.

Test point 4

Right mixing chamber temp. sensor
Short to ground or open circuit/short to ground or open circuit
Fault code 13

1. Check resistance between G 18 and G 24.
   Specifications: at 0° C 30.6 to 34.7 kΩ
   at 25° C 9.5 to 10.5 kΩ
   at 50° C 3.4 to 3.8 kΩ
2. Ground must be present at G 18 when the connector is connected.
3. G 24 must not be connected to ground.

Fault, fault code	Possible causes, remedy, notes

Test point 5

Evaporator temp. sensor
Short to ground or open circuit/short to ground or open circuit
Fault code 14

1. Check resistance between G 18 and G 22.
   Specifications: at 0° C 8.8 to 9.2 kΩ
   at 25° C 2.6 to 2.9 kΩ
2. Ground must be present at G 18 when the connector is connected.
3. G 22 must not be connected to ground.

Test point 6

Rear blower temp. sensor
Short to ground or open circuit/short to ground or open circuit
Fault code 15

1. Check resistance between G 18 and G 10.
   Specifications: at 0° C 28.8 to 36.4 kΩ
   at 25° C 9.0 to 11.0 kΩ
   at 50° C 3.1 to 4.0 kΩ

Note

The wires from the heating/ A/C regulator to the temperature sensor are routed across two connectors (X 3 and X 20).

2. Ground must be present at G 18 when the connector is connected.
3. G 10 must not be connected to ground.

Test point 7

Oil cooler temp. sensor
Short to ground or open circuit/short to ground or open circuit
Fault code 21

1. Check resistance between G 18 and G 12.
   Specifications: at 60° C 3.6 to 4.0 kΩ
   at 85° C 1.4 to 1.6 kΩ
   at 100° C 0.9 to 1.0 kΩ
2. Ground must be present at G 18 when the connector is connected.
3. G 12 must not be connected to ground.

Fault, fault code	Possible causes, remedy, notes

Test point 8

Defroster flap motor
Signal unplausible
Fault code 22

1. Check voltage at fitted connector between G 13 (positive) and G 18 (negative).
   Specification: approx. 5 Volts.
   If no voltage is present, replace heater/ A/C regulator.
2. Check voltage at fitted connector between G 26 (positive) and G 18 (negative).
   Specification: approx. 0.2 to 5 Volts, depending on motor position.
3. Check wires G 13, G 18 and G 26 from heater/ A/C regulator to servo motor for open circuit and wires G 13 and G 26 for short to ground.
4. Check wires K 14 and K 15 from heater/ A/C regulator to servo motor for open circuit, short to ground and short to positive.

Test point 9

Footwell flap motor
Signal unplausible
Fault code 23

1. Check voltage at fitted connector between G 13 (positive) and G 18 (negative).
   Specification: approx. 5 Volts.

   If no voltage is present, replace heater/ A/C regulator.
2. Check voltage at fitted connector between G 27 (positive) and G 18 (negative).
   Specification: approx. 0.2 to 5 Volts, depending on motor position.
3. Check wires G 13, G 18 and G 27 from heater/ A/C regulator to servo motor for open circuit and wires G 13 and G 27 for short to ground.
4. Check wires K 6 and K 19 from heater/ A/C regulator to servo motor for open circuit, short to ground and short to positive.

Fault, fault code	Possible causes, remedy, notes

Test point 10

Fresh-air flap motor
Signal unplausible
Fault code 24

Check voltage at fitted connector between G 13 (positive) and G 18 (negative).
Specification: approx. 5 Volts.

2. Check voltage at fitted connector between G 20 (positive) and G 18 (negative).
   Specification: approx. 0.2 to 5 Volts, depending on motor position.
3. Check wires G 13, G 18 and G 20 from heater/ A/C regulator to servo motor for open circuit and wires G 13 and G 20 for short to ground.
4. Check wires K 3 and K 16 from heater/ A/C regulator to servo motor for open circuit, short to ground and short to positive.

Test point 11

Left mixing flap motor
Signal unplausible
Fault code 31

1. Check voltage at fitted connector between G 13 (positive) and G 18 (negative).
   Specification: approx. 5 Volts.
   If no voltage is present, replace heater/ A/C regulator.
2. Check voltage at fitted connector between G 25 (positive) and G 18 (negative).
   Specification: approx. 0.2 to 5 Volts, depending on motor position.
3. Check wires G 13, G 18 and G 25 from heater/ A/C regulator to servo motor for open circuit and wires G 13 and G 25 for short to ground.
4. Check wires K 5 and K 18 from heater/ A/C regulator to servo motor for open circuit, short to ground and short to positive.

Printed in Germany – VI.1994

Fault, fault code	Possible causes, remedy, notes

Test point 12

Right mixing flap motor
Signal unplausible
Fault code 32

1. Check voltage at fitted connector between G 13 (positive) and G 18 (negative).
   Specification: approx. 5 Volts.
   If no voltage is present, replace heater/ A/C regulator.
2. Check voltage at fitted connector between G 8 (positive) and G 18 (negative).
   Specification: approx. 0.2 to 5 Volts, depending on motor position.
3. Check wires G 8, G 13 and G 18 from heater/ A/C regulator to servo motor for open circuit and wires G 8 and G 13 for short to ground.
4. Check wires K 4 and K 17 from heater/ A/C regulator to servo motor for open circuit, short to ground and short to positive.

Test point 13

Left heater blower motor
Signal unplausible
Fault code 33

Note

The blower final stage is monitored for excessive temperatures. The blowers are not monitored separately.

1. Check if blower final stage is securely bolted to the aluminium cooling panel.
2. Check if blower motor has seized mechanically.

Test point 14

Motor
Right heater blower
Signal unplausible
Fault code 34

Refer to Test point 13.

Fault, fault code	Possible causes, remedy, notes

Test point 15

Condenser blower motor seized
Fault code 41

1. Check voltage at condenser blower relay at term. 30 and term. 30 C.
2. Check if motor has seized mechanically.
3. Check wiring from relay term. 87 to blower motor for open circuit and short to ground.
4. Check wiring from blower motor to heater/ A/C regulator G 7 for open circuit and short to ground.
5. Check activation of relay according to wiring diagram.

Test point 16

Oil cooler blower motor seized
Fault code 42

1. Check voltage at oil cooler blower relay term. 30 and term. 30 C.
2. Check if engine has seized mechanically.
3. Check wire from relay term. 87 to blower motor for open circuit and short to ground.
4. Check wire from blower motor to heating/ A/C regulator G 9 for open circuit and short to ground.
5. Check activation of relay according to wiring diagram.

Test point 17

Rear blower motor - Stage 1 seized
Fault code 43/46

1. Check voltage at rear blower relay term. 30 and term. 30 C.
2. Check if engine has seized mechanically.
3. Check triggering of relay according to wiring diagram.
4. Check wire from relay term. 87 C to motor for continuity and short to ground.
5. Check ballast resistor (Ballast resistor with restart interlock feature; see page 80 - 1, Vol. 6).
6. Check wires from motor to heater/ A/C regulator G 1 and G 19 for open circuit and short to ground.

Printed in Germany – VI 1994

Fault, fault code	Possible causes, remedy, notes

Test point 18

Rear blower motor
- Stage 2 seized
Fault code 44/47

1. Check voltage at rear blower relay term. 30 and term. 30 C.
2. Check if engine has seized mechanically.
3. Check activation of relay according to wiring diagram.
4. Check wire from relay term. 87 to motor for continuity and short to ground.
5. Check wires from motor to heater/ A/C regulator G 1 and G 19 for open circuit and short to ground.

Note on test point 17/18

The 911 Turbo is fitted with 2 rear blowers. Fault codes 43 and 44 refer to the right-hand blower, codes 46 and 47 refer to the left-hand blower. Since the same heater/ A/C regulator is fitted to the 911 Carrera, pins G 1 and G 19 are jumpered in the wiring harness of this model. For this reason, a fault in the rear blower causes both fault codes, i.e. 43 and 46 or 44 and 47, to be displayed on the 911 Carrera.

Test point 19

Inside sensor motor
Signal unplausible
Fault code 45

1. Check voltage at connector housing.
2. Check if motor has seized mechanically.

Test point 20

Unknown fault code
Fault code XX

1. Check secondary side of ignition system.
2. Clear fault memory.

Drive links

Drive links menu

```
Drive links
1 = Left mixing flap
2 = Right mixing flap
3 = Defroster flap    >
```

```
< Drive links
1 = Footwell flaps
2 = Fresh-air flap
3 = Rear blower       >
```

```
< Drive links
1 = Left heater blower
2 = Right heater blower
3 = Oil cooler blower >
```

```
< Drive links
1 = Condenser blower*
2 = Air-condit. test*
```

* Only on system H 06.

Operation of the servo motors controlling the flaps and the blower motors, respectively, is indicated via a bar chart (except for heater blower where operation is detected by blower noise).
An important indicator of servo motor operation is that the bar chart display changes, i.e. the flaps must move from the open to the closed and from the hot to cold positions (and vice versa).

When performing the air conditioning test, make sure that the evaporator temperature drops below 5°C. If a test is not possible, check operation of the left and right mixing flaps and of the condenser blower.

Input signals

Input signals menu

```
Input signals
1 = Footwell
2 = Defroster
3 = Blower              >
```

```
< Input signals
1 = Temperature
2 = Air circulation
3 = Defroster           >
```

```
< Input signals
1 = AC*
2 = AC MAX*
```

* Only on system H06.

Potentiometer operation is displayed on a bar chart.

Changing the position of the potentiometers: The bar chart display must increase and decrease, respectively.

Switch operation is indicated by the open and closed positions, respectively.

Switch not pressed: open.
Switch pressed: closed.

Actual values

Actual values menu

```
Actual values
1 = Voltage Term. X
2 = Inside temperature
3 = Rear temperature  >
```

```
< Actual values
1 = Lt. mixing temp.
2 = Rt. mixing temp.
3 = Oil temperature   >
```

```
< Actual values
1 = Evaporator temp.*
```

* Only on system H06.

The Actual values menu option allows the above voltage and temperature settings to be called up and read off directly.

90 0 1

Diagnosis / Troubleshooting

Alarm System

System I 00

System I 01

Printed in Germany - 12.1995

Contents

	Pa
System description	90 - 3
Component layout	90 - 5
Functions of individual components	90 - 6
Tools	90 - 7
Pin assignment of control unit	90 - 8
Fault memory (overview of possible displays)	90 - 9
Fault overview	90 - 11
Drive link actuation	90 - 16
Input signals	90 - 20
Country coding (I 00)	90 - 25
Country coding (I 01)	90 - 26
Result memory	90 - 27
System check	90 - 28
Remote Control (I 01)	90 - 29
Vehicle type (I 01)	90 - 30

System description

Alarm system with integral Central Locking System

The 911 Carrera (993) is fitted with a diagnosable alarm system that incorporates the central locking feature, the delayed switchoff of the interior lights and an anti-drive-off feature.

The alarm system is activated by:

1. Locking a door.
2. Locking one of the door locks three times in rapid sequence.

After arming the alarm system, the operation of all actuation circuits is checked. If no fault is detected, this condition is indicated by rapid flashing of the alarm readiness lamps (approx. 10 seconds).

After approx. 10 seconds all actuation circuits are armed. Slow flashing of the alarm readiness lamps indicates this condition.

If a fault condition is detected, the LEDs do not flash during the check period (approx. 10 seconds).

This may be due to the following fault conditions:

- Vehicle doors not closed
- Vehicle doors not locked
- Hood not closed
- Luggage compartment lid not closed
- Glove compartment lid not closed
- Rear parcel shelf not closed (if fitted)
- Radio not fitted correctly

Only those activation circuits that are not faulty are armed after the check has been terminated. A fault condition is displayed by double flashing after the check has been terminated. If an alarm has been triggered, this is also indicated by double flashing.

Three different alarm types preadjusted according to the country specifications are provided in the control unit. When replacing the control unit, the country-specific coding must be reestablished with System Tester 9288.

Central Locking System

The Central Locking System covers the driver and passenger doors. The key may be used to lock and unlock the driver and passenger doors. The locking status of the vehicle is indicated by the flashing code of the alarm readiness lamps.

When the ignition is switched off, the central locking button in the center console may be used to lock the doors only. Wit the ignition on, it may be used to lock and unlock the doors. When the driver's door is open, the doors cannot be locked.

Time-delay circuit of the interior lights

The interior lights are no longer controlled directly via the door contacts. The interior lights are switched on:

1. By unlocking the doors.

2. By locking the doors.

The lights continue to be lit for approx. 20 seconds.

The interior lights are switched off (doors closed):

1. When the ignition is switched on.

2. When the doors are locked.

Anti-drive-off feature

The anti-drive-off feature is activated when the alarm system is armed. If an alarm is triggered, terminal 15 for the DME control unit is interrupted and the ignition and injection systems are disabled.

Component layout

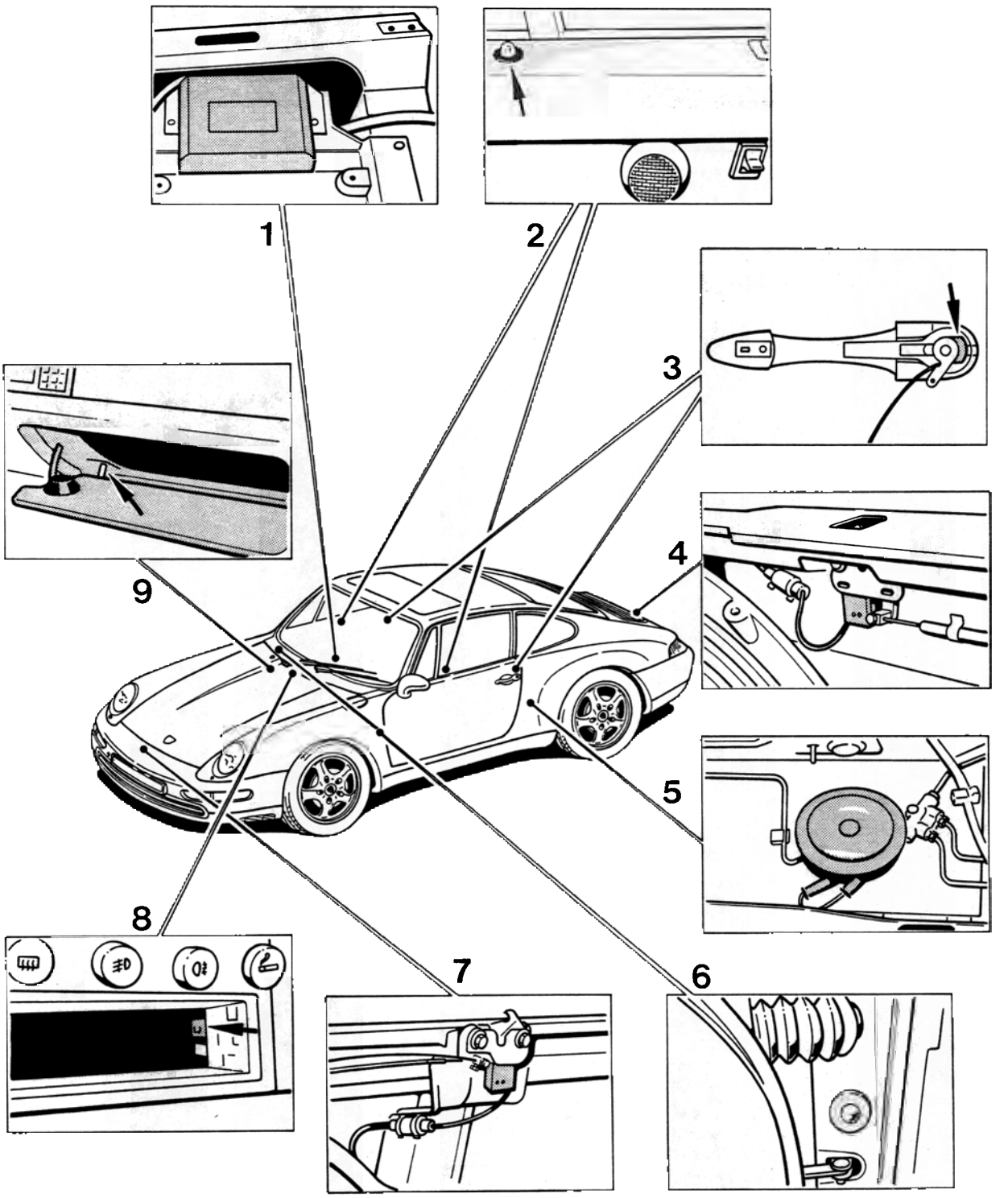

Radio (closed curr. loop) interrupted during activation

Radio contact to ground during activation

Fault memory

Overview of possible displays

Control unit faulty	Glove comp. open during activation
Voltage failure term. 30 with active alarm system	Input 2 to ground during activation
Voltage failure during alarm output	Central Locking System button closed during activation
Position of the drives unplausible	Input 1 to ground during activation
Doors(s) open during activation	Input 3 to plus during activation
Engine comp. open during activation	Position switch on drive closed during activation
Luggage comp. open during activation	Position switch on drive open during activation

Fault, Fault code	Possible causes, remedies, notes

Note

The fault memory **must** be erased whenever a fault in the alarm system has been remedied.

Test point 1

Control unit faulty
Fault code 11

Replace control unit.

Test point 2

Voltage failure term. 30
with active alarm system
Fault code 12

Check battery.

Check fuse at control unit.

Check wiring according to wiring diagram.

Test point 3

Voltage failure
during alarm output
Fault code 13

Refer to test point 2.

Test point 4

Position of the drives
implausible
Fault code 14

This fault is also stored if, for example, the driver's door is open when the key is used to actuate the central locking system from the passenger's door.

Check position switch at drive link:

1. Disconnect connections X 11/1 (driver's side) and X 12/1 (passenger's side). Use a jumper wire to connect terminal 1 to ground on pin side. Use an ohmmeter to check terminal 4 and terminal 6 (pin side) for continuity to ground.
Continuity to ground (0 - 5 Ω) at terminal 4, if door is locked.
Continuity to ground (0 - 5 Ω) at terminal 6, if door is unlocked.
If no continuity is displayed, disconnect connection at drive link.

2. Use an ohmmeter to check for continuity from terminal 3 to terminal 2 and from terminal 3 to terminal 4.
Continuity from terminal 3 to terminal 2 if door is locked.
Continuity from terminal 3 to terminal 4 if door is unlocked.

Fault overview

Test point	Fault code	Result of fault	Page
1	11	Fault memory	90 - 12
2	12	Fault memory	90 - 12
3	13	Fault memory	90 - 12
4	14	Fault memory	90 - 12
5	15	Fault memory	90 - 13
6	16	Fault memory	90 - 13
7	17	Fault memory	90 - 13
8	18	Fault memory	90 - 14
9	19	Fault memory	90 - 14
10	20	Fault memory	90 - 14
11	21	Fault memory	90 - 14
12	22	Fault memory	90 - 14
13	23	Fault memory	90 - 15
14	24	Fault memory	90 - 15
15	25	Fault memory	90 - 15
16	26	Fault memory	90 - 15

Fault, Fault code	Possible causes, remedies, notes

Test point 8

Glove compartment open during activation
Fault code 18

- Check glove compartment switch and glove compartment lamp for short to ground.
- Check control unit to glove compartment switch wire for short to ground.

Test point 9

Input 2 to ground during activation
Fault code 19

Note

Fault symptoms may appear if auxiliary systems (e.g. interior monitor) have been fitted.

- Check auxiliary system of input 2.
- Using Special Tool 9540, check wiring from control unit connector II, terminal 8, to the auxiliary system for short to ground.
- Check auxiliary system wiring for short to ground.

Test point 10

Central locking system button closed during activation
Fault code 20

- Check central locking system button.

  Using Special Tool 9540, check wiring from control unit connector II, terminal 11, to button for short to ground.

Test point 11

Input 1 to ground during activation
Fault code 21

- Check auxiliary system of input 1.

  Note

  On vehicles fitted with rear parcel shelf (Cabriolet) instead of the occasional seats, the contacts of the rear parcel trays are wired to this input.

  Using Special Tool 9540, check wire from control unit connector II, terminal 7, to auxiliary system for short to ground.

Test point 12

Input 3 to positive during activation
Fault code 22

- Check auxiliary system of input 3.
- Using Special Tool 9540, check wiring from control unit connector II, terminal 17, to auxiliary system for short to positive.

Fault, Fault code	Possible causes, remedies, notes
	Check connection from X 11/1 terminal 4 to X 12/1 terminal 4 for continuity. Check connection from X 11/1 terminal 6 to X 12/1 terminal 6 for continuity. Check connection from X 11/1 terminal 4 to control unit connector II terminal 12 for continuity. Check connection from X 12/1 terminal 6 to control unit connector II terminal 10 for continuity. Check triggering of drive links (actuators). Connectors X 11/1 and X 12/1, terminal 8 and terminal 10, must be grounded in the quiescent state. Positive voltage must be present at terminal 8 if the drive link is triggered in the "open" position. Positive voltage must be present at terminal 10 if the drive link is triggered in the "closed" position. Note The drive links are triggered for a few milliseconds only. Check wirings from control unit connector I terminal 11 and terminal 12 to the drive links for continuity.
Test point 5 Door(s) open during activation Fault code 15	Check LH and RH door contact switches for short to ground. Check wiring for short to ground according to wiring diagram.
Test point 6 Engine compartment open during activation Fault code 16	Check engine hood switch and engine compartment lamp for short to ground. Check control unit to engine compartment lamp wire for short to ground.
Test point 7 Luggage compartment open during activation Fault code 17	Check trunk lid switch and luggage compartment lamp for short to ground.

Printed in Germany – III.1993

Drive links

This function allows the following components to be triggered:

Function display in lock buttons

Lock

Alarm horn

Turn signals

Interior light

Button light in central locking system button

External output

Anti-drive-off feature

```
Function display
1 = on
3 = off
Return :              N
```

If the function display is turned on, the doors are locked and the LEDs light up permanently. The „on" display flashes on the tester.
If the function display is turned off again, the LEDs are turned off as well. The doors are unlocked again when the user returns to the menu.

```
Lock
1 = closed
3 = open
Return:               N
```

Lock closed: Doors are locked.
Lock open: Doors are unlocked.

```
Alarm horn
1 = on
3 = off
Return:               N
```

Alarm horn on: Alarm horn is triggered continuously (continuous sound).

```
Turn signals
1 = on
3 = off
Return:               N
```

Turn signals on: All turn signals are triggered continuously (continously lit).

```
Interior light
1 = on
3 = off
Return:               N
```

The interior light must be in the door contact position.

```
Button light
1 = on
3 = off
Return:               N
```

Button light on: The light in the central lock system button is triggered.

Printed in Germany – III,1993

```
External output
1 = on
3 = off
Return:              N
```

The external output is used to trigger other control units, e.g. ultrasonic monitoring of the interior.

```
Anti-drive-off feature
1 = on
3 = off
Return:              N
```

Anti-drive-off feature on: Terminal 15 of the DME control unit is interrupted. It must no longer be possible to start the engine.

Printed in Germany – III,1993

Possible fault displays

1

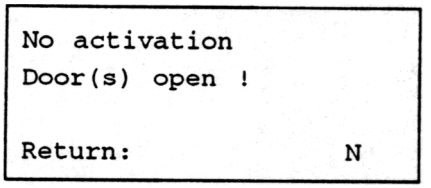

– Close doors

– Check door contact wires to alarm control unit plug II terminal 21 for short to ground.

2.

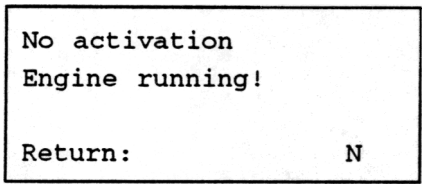

– Turn off engine, only switch on ignition.

3.

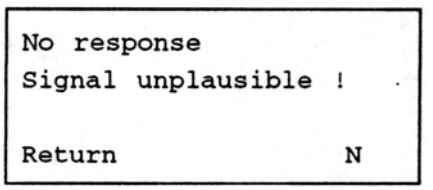

– Replace control unit.

4.

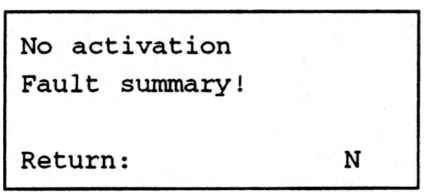

Note

Fault summary is displayed if several drive links (actuators) are triggered simultaneously, e.g. if turn signals are on while the function display is checked.

Check wiring to control unit plug I, terminals 8, 9, 10, 11, 12, and plug II, terminal 20, for short to positive.

Check wiring to control unit plug II, terminal 24 (if connected) and terminal 7, for short to ground.

5.

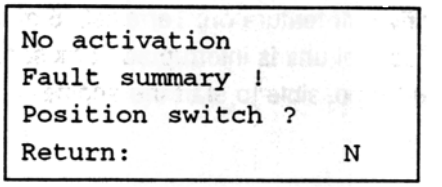

– Refer to item 4.

Also check position switch (refer to page 90- 12).

6.

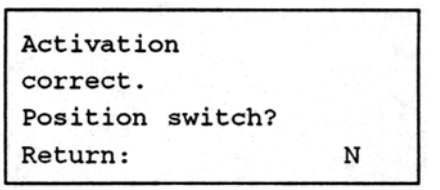

– Check position switch (refer to page 90 - 12).

Printed in Germany – III,1993

7.

```
No response
Signal unplausible !
Position switch ?
Return:              N
```

– Check position switch
(refer to page 90 - 12).

– Replace control unit.

8.

```
Unknown
response code!

Return:              N
```

Check following ground points:

1. MP X: Battery to body
2. MP XI: Body to transmission
3. MP XX: Body to alarm control unit

Printed in Germany – III,1993

Input signals

This function allows the following input signals to be checked:

Door contacts

Engine hood switch

Luggage compartment switch

Position switches at drive motors

Central locking system button

Glove compartment button

Radio closed loop

Alarm contact radio bracket

Microswitch for activation of alarm

Microswitch for deactivation of alarm

Input 1 (auxiliary system)

Input 2 (auxiliary system)

Input 3 (auxiliary system)

Speedo signal

Term. 15

Term. 61

1

```
Door(s)

- open -
Return:              N
```

Open is displayed if at least one door is open. Closed is displayed if both doors are closed. If required, check wiring to control unit for open circuit or short to ground according to wiring diagram.

2.

```
Engine compartment

- open -
Return:              N
```

Open is displayed if engine hood is open. Closed is displayed if engine hood is closed. If required, check wiring to alarm control unit for open circuit or short to ground according to wiring diagram.

Printed in Germany – III,1993

3.

```
Luggage compartment

- open -
Return                N
```

Open is displayed if hood is open. Closed is displayed if hood is closed. If required, check wiring to alarm control unit for open circuit or short to ground according to wiring diagram.

4.

```
Position switch
open: - closed -
closed:  - open -
Return                N
```

This display appears if doors are unlocked.

4a.

```
Position switch
open: - open -
closed:  - closed -
Return:               N
```

This display appears if doors are locked. If required, check position switch (refer to page 90 - 12)

5.

```
Central locking
system button
-  open -
Return:               N
```

Open is displayed if the central locking system button has not been pressed down. Closed display appears if the central locking system button is pressed down.

6.

```
Glove compartment

- open -
Return:               N
```

Open is displayed if glove compartment is open. Closed is displayed if glove compartment is closed.

7.

```
Radio
(closed loop)
- closed -
Return:               N
```

The closed-current loop must be closed. The contact is wired to ground across the alarm horn.

If the closed-current loop is open, check wire from control unit connector II, terminal No. 13, to alarm horn for continuity.

Check ground connection of alarm horn.

Printed in Germany – III,1993

8.

```
Radio contact

- open -
Return:          N
```

If Radio contact closed is displayed:

Check insulating strip on radio.

Check wiring from control unit plug II, terminal 9, to alarm contact at radio bracket or to alarm contact at CD player for short to ground.

9.

```
Activate
button
- open -
Return:          N
```

Note

The spare key is required for checks according to item 9 and 10 since the ignition must be switched off during the diagnostics.

Use the spare key to turn the locks of the driver's and passenger doors into the „locking" position one after another. The display must then switch from „open" to „closed" („locked").

If „closed 2 ("locked") is displayed in the rest position, check wiring from the lock barrels to the alarm control unit connector II, terminal 1, (terminal 2 for RHD vehicles) for short to ground according to wiring diagram.

If the display remains set to „open" after then lock barrels have been actuated, check wirings for continuity according to wiring diagram.

10.

```
Deactivate
button
- open -
Return:          N
```

Use the spare key to turn the locks of the driver's and passenger doors into the „open" position one after another. The display must then switch from „open" to „closed" („locked").

If „closed" („locked") is displayed in the rest position, check wiring from the lock barrels to the control unit connector II, terminal 2, (terminal 1 for RHD vehicles) for short to ground according to wiring diagram.

If the display remains set to „open" after the lock barrels have been actuated, check wirings for continuity according to wiring diagram.

11.

```
Input 1

- open -
Return:          N
```

Note

On vehicles (Cabriolet) with rear parcel shelf, the contacts of the rear parcel trays are wired to this input.

Display „open" for inputs that are not wired or if the parcel trays are closed (contacts open).

Display „closed" if at least one parcel tray is open (contact closed). If required, check wiring according to wiring diagram.

Printed in Germany – III,1993

12.

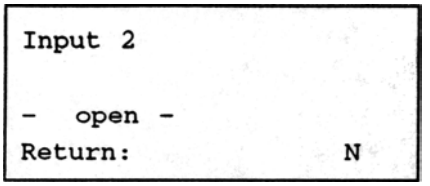

In standard version, this input is not wired. Auxiliary systems may be wired across this input. Display is „open" if input is not wired. If required, check auxiliary system according to manufacturer's instructions.

13.

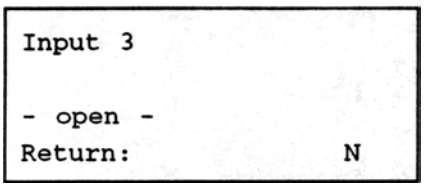

Refer to item 12.

14.

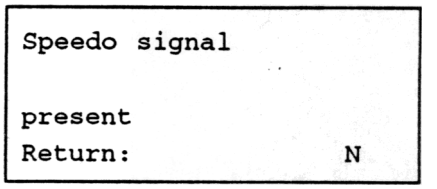

Display is not present if vehicle is stationary.
Display is present if vehicle is moving.
If required, check wiring from control unit plug II, terminal 6, to speedometer according to wiring diagram.

15.

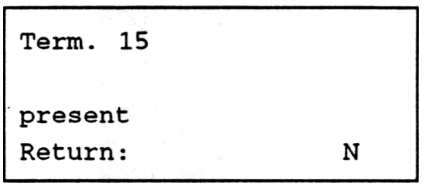

If display is not present, check wire from alarm control unit plug II, terminal 18, to central electrical system according to wiring diagram.

16.

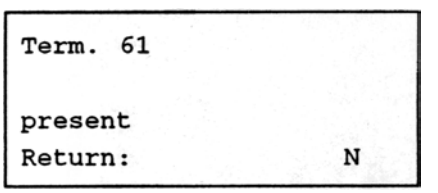

Note

If present is displayed although the engine is not running, this may be due to a summary fault (refer to item 4, Drive links functional group). In this case, start by remedying this fault.
If display is not present although the engine is running, check wire from control unit plug II, terminal 23, to generator according to wiring diagram.

Printed in Germany – III,1993

Country codes (I 00)

The System Tester 9288 may be used to encode three pre-set alarm versions

1. RoW (Rest of world)
2. CH (Switzerland)
3. USA

Alarm output

RoW

Alarm horn max. 30 sec. interval.

Turn signals max. 5 min.

Interior light flashes in an asynchronous manner with turn signals (if in door contact position).

CH

Alarm horn max. 30 sec. continuous.

USA

Alarm horn max. 3 min. interval.

Turn signals max. 4 min.

Interior light flashes in an asynchronous manner with turn signals (if in door contact position).

Alarm system encoding

When replacing the control unit, activate one of the preset country codes according to the national C number.

RoW

C numbers: 00, 05, 07, 09, 11, 12, 13, 14, 16, 17, 19, 20, 21, 22, 27, 28, 99.

C number: 10.

C numbers: 02, 04, 06, 08, 15, 18, 23, 24, 26, 31, 32, 36.

Country code		
RDW	PORSCHE	*
1 = coding		
Return:		N

The Country code menu displays the coded version in the top left corner, e.g. RoW; the center displays Porsche or Workshop, depending on where the system has been coded. The asterisk on the right is displayed for versions that include the interior lights in the alarm emission.

Printed in Germany - 12, 1995

Country codes (I 01)

The System Tester 9288 may be used to encode three pre-set alarm versions

1. RoW (Rest of world)
2. CH (Switzerland)
3. USA

Alarm output

Country group 1

Alarm horn max. 30 sec. interval.

Turn signals max. 5 min.

Interior light flashes in an asynchronous manner with turn signals (if in door contact position).

Country group 2

Alarm horn max. 30 sec. continuous.

Country group 3

Alarm horn max. 3 min. interval.

Turn signals max. 4 min.

Interior light flashes in an asynchronous manner with turn signals (if in door contact position).

Alarm system encoding

When replacing the control unit, activate one of the preset country codes according to the national C number.

County group 1

C numbers: 00, 05, 07, 09, 11, 12, 13, 14, 16, 17, 19, 20, 21, 22, 27, 28, 99.

Country grooup 2

C number: 10.

USA

C numbers: 02, 04, 06, 08, 15, 18, 23, 24, 26, 31, 32, 36.

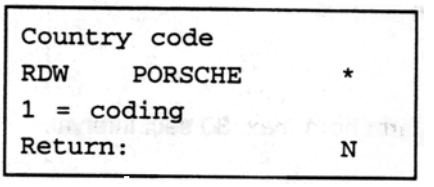

The Country code menu displays the coded version in the top left corner, e.g. RoW; the center displays Porsche or Workshop, depending on where the system has been coded. The asterisk on the right is displayed for versions that include the interior lights in the alarm emission.

For pressing, press key 1:

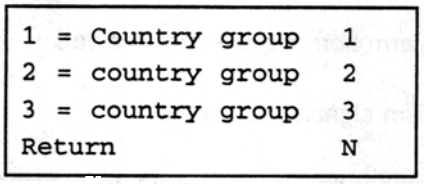

A selection of country groups then appears. To set the group required, press the appropriate key.

Result memory (I 01)

The result memory registers triggering of an alarm, the contact that triggered the alarm as well as the type of activation. A maximum of 10 results may be stored. If another result is stored, the oldest result stored is deleted. The result with the highest number is the most up-to-date result.
Alarms may be triggered by contacts at the following components:

Doors

Engine compartment

Luggage compartment

Glove compartment

Radio

Additional alarm triggering options:

Term. 15 on after system has been activated

Signal to input 1

Signal to input 2

Signal to input 3

Position switch

Open circuit of closed loop

Note

Up to three alarms may be triggered across input 2.

The following types of activation are to be distinguished:

normal, i.e. locking the doors with the key, thus activating the central locking system

locking three times, i.e. locking one of the door locks rapidly for three consecutive times

System check

The type of activation may be invoked with button 1 on the below display:

```
Alarm:              - x -
activated by
xxxxxxxxxxxxxx
```

Note

Erase the result memory whenever the alarm system has been checked.

System check

The System check menu item may be used to check all components triggering an alarm (except Term. 15). In this case, the alarm horn is only triggered twice for a short interval.

The following display appears after the System check menu item has been called:

```
System check !

Continue:          >
```

The individual components that may trigger an alarm (except Term. 15) can now be checked. E.g. if a door is opened, an alarm is triggered. At the same time, triggering of the alarm is stored in the result memory. After the check has been completed and the > key has been pressed, the following display appears:

```
Note:
Erase result
memory !
Return:            N
```

The result memory **must** be erased since the check has been stored in the memory.

Remote control

Only I 01

Using the system tester, it is possible to set the alarm system in accordance with the equipment installed and legislation in the countries concerned.

In the case of vehicles without immobilizer and therefore also without remote control units, the alarm system must be set to "remote control off".

In the case of vehicles with immobilizers, the alarm system must be encoded in accordance with the C number of the country.

For the following C numbers, the alarm system must be set to "remote control on":
00, 05, 06, 07, 08, 09, 10, 11, 12, 13, 14, 15, 16, 17, 18, 19, 20, 21, 22, 26, 27, 28, 31, 32 and 99.

For the following C numbers, the alarm system must be set to "remote control on light flashing":
02, 23, 24 and 36.



The status which has been set (on or off) appears at the top left of the display. Either Porsche or workshop appears in the center, depending on where the setting was made. The asterisk at the right appears if the setting "remote control on light flashing" has been selected.

To select a setting, press key 1

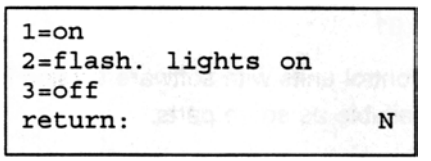

The settings which are available are displayed. To make the setting, press the appropriate key.

Note

If the setting "remote control flashing lights on" is selected, the lights flash twice as confirmation after the vehicle has been locked.

After the vehicle has been unlocked, the lights flash once.

As this status indication is not permitted in some countries. The alarm system should be set in accordance with the C number, as indicated above.

Vehicle type

Only I 01

Only control units with software version I 01 are available as spare parts.

When the alarm control unit has been replaced, the vehicle type must therefore be set.

```
        Vehicle type
1 =   911 Carrera 2/4
2 = *911 Carrera(993)
more:                  >
```

```
<      Vehicle type
1 = 968
2 = 944
3 = 928
```

In the vehicle type menu, a selection of vehicle types is displayed. The type currently selected is indicated by an asterisk.

If the unit is to be set to another type, press the appropriate key. The unit will then ask whether the vehicle type is to be changed.