page

General

Technical data 0.1

Maintenance, Self-diagnosis general

Maintenance . . . . . 03 - 1
Operating instructions for system tester 9288 . . . . . 03 - 19

Engine, Crankcase, Engine Mounts

Tolerances and wearlimits . . . . . 10 - 1
Tightening torques for engine . . . . . 10 - 5
Removing and installing engine (manual transmission) . . . . . 10 - 9
Removing and installing engine (Tiptronic transmission) . . . . . 10 - 13

Engine, Crankshaft, Pistons

Adjusting guide rail for balance shaft toothed belt . . . . . 13 - 1
Checking adjustment of balance shafts . . . . . 13 - 3
Fitting toothed belt for balance shaft . . . . . 13 - 5
Adjusting Special Tool 9201 . . . . . 13 - 7
Checking and adjusting balance shaft toothed belt tension . . . . . 13 - 9
Crankcase markings . . . . . 13 - 13
Locking the flywheel for assembly work . . . . . 13 - 15
Engine support . . . . . 13 - 17
Crankcase - Tools . . . . . 13 - 19
Machining cylinder bores in upper crankcase section . . . . . 13 - 21
Crankcase - Installation length or protrusion length of studs . . . . . 13 - 24c
Dismantling and assembling crankcase, crankshaft . . . . . 13 - 25
Aligning the upper and lower parts of the crankcase . . . . . 13 - 29
Crankshaft - Standard and Repair Dimensions . . . . . 13 - 31
Dismantling and assembling pistons, connecting rod . . . . . 13 - 33
Checking piston and cylinder bore . . . . . 13 - 37
Dismantling and assembling balance shaft drive . . . . . 13 - 39
Removing and installing double-mass flywheel and grooved ball bearing . . . . . 13 - 43

Engine, Cylinder Head, Valve Drive

Replacing the camshaft toothed belt (with hydraulic belt tensioner) . . . . . 15 - 1
Adjusting and checking the camshaft setting . . . . . 15 - 3
Applying TDC mark to camshaft sprocket . . . . . 15 - 7
Camshaft adjustment gauge (shop-made) . . . . . 15 - 9
Fitting the camshafts . . . . . 15 - 11
Fitting the camshaft seal . . . . . 15 - 15

Printed in Germany – XI, 1994

page

Camshaft references . . . . . 15 - 17
Machining the cylinder head mating face . . . . . 15 - 19
Removing and installing cylinder head . . . . . 15 - 21
Valve dimensions . . . . . 15 - 24a
Dismantling and assembling camshaft drive . . . . . 15 - 25

The following topics of Repair group 15 are described in the Repair Manual Type 944, vol. 1 - A:

Cylinder head, disassembling and assembling . . . . . 15 - 115
Valve springs, removing and installing with Sauer tool . . . . . 15 - 118
Valve springs, removing and installing, removing valve stem seal . . . . . 15 - 121
Checking valve guides . . . . . 15 - 123
Replacing valve guides . . . . . 15 - 125
Checking valve-seat wear limit . . . . . 15 - 130
Valve seats, checking and machining . . . . . 15 - 131
Checking and adjusting installation length of valve springs . . . . . 15 - 133

Engine, Lubrication

Removing and installing lubrication system components . . . . . 17 - 1
Dismantling and assembling oil pressure release valve . . . . . 17 - 5
Removing and installing oil restraining valve . . . . . 17 - 7
Checking oil pressure . . . . . 17 - 9
Cleaning the entire engine oil system . . . . . 17 - 11

Engine, Cooling

Mixing table . . . . . 19 - 1
Cecking cooling and heating system for tightness . . . . . 19 - 1

Fuel Supply

Fuel vacuum line routing . . . . . 20 - 1

The following topics of Repair group 20 are described in the Repair Manual Type 944, vol. 1 - A:

Replacing fuel filter, checking injection lines for leaks and tightness . . . . . 20 - 102

Fuel System - Electronic Injection

Testvalues . . . . . 24 - 1
Checking idle and CO level of vehicles without catalytic converter . . . . . 24 - 2
Checking idle and CO level of vehicles with catalytic converter . . . . . 24 - 3

Printed in Germany – XI, 1994

page

Removing and installing DME injection system components . . . . . 24 - 5
Removing and installing injection valves . . . . . 24 - 9

The following topics of Repair group 24 are described in the Repair Manual Type 944, vol. 1 - A:

Checking fuel pressure . . . . . 24 - 103

Ignition system

Replacing spark plugs . . . . . 28 - 1
DME control units as of Model Year '92 . . . . . 28 - 3
Removing and installing knock sensors . . . . . 28 - 5
DME-Diagnosis / Troubleshooting . . . . . D24/28 - 1

Printed in Germany – XI, 1994

PORSCHE

968

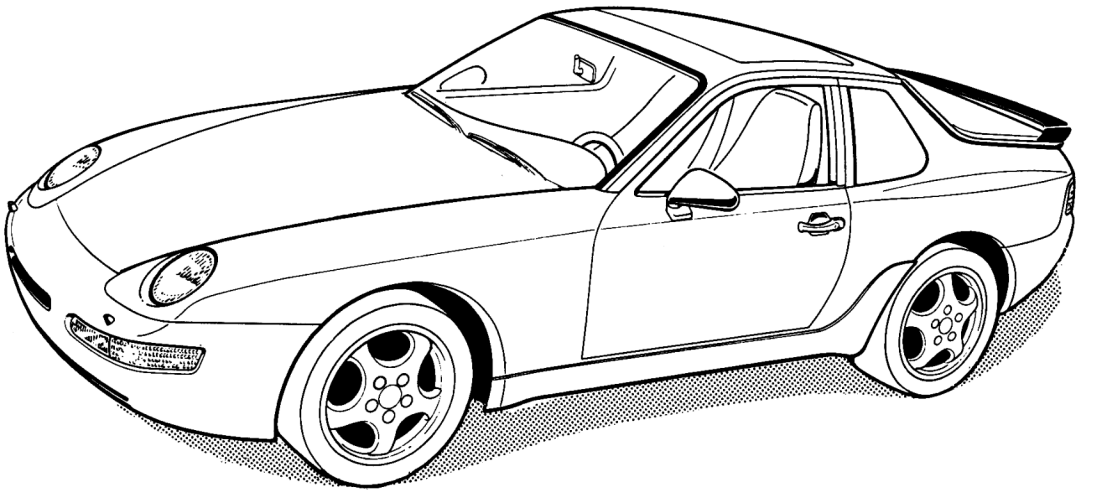

862 - 01

Printed in Germany – II, 1991

Technical Data - Type 968 - Model '92

(For adjusting values and wear limits, refer to the relevant Repair Groups)

Note: U.S. values are indicated in brackets

Power unit

Internal engine code		Manual transmission Tiptronic	M 44.43 M 44.44
No. of cylinders		4	
Bore	mm (in.)	104 (4.09)	
Stroke	mm (in.)	88 (3.46)	
Displacement (real)	c.c.(cu.in.)	2,990 (182.5)	
Compression ratio		11.0 : 1	
Max. engine power to 80/1269 / EEC Net Power, to SAE J 1349 at engine speed	 kW/HP kW (HP) rpm	 176/240 176 (236) 6,200	
Max. torque to 80/1269/EEC Net torque, to SAE J 1349 at engine speed	 Nm/kpm Nm (lbft) rpm	 305/31.0 305 (225) 4,100	
Max. liter output DIN 70020 SAE J 1349	 KW/l / hp/l KW/l (HP/l)	 58.9/80.3 58.9 (78.7)	
Torque limitation by fuel cutout Idle speed M 44.43 Idle speed M 44.44	 rpm rpm rpm	 6,700 ± 20 840 ± 40 880 ± 40	
Engine weight (dry)	kg	172	

Printed in Germany - II, 1991

Engine Design

Engine type	4-cylinder 4-stroke otto-cycle engine with 2 balance shafts
Crankcase	Light-alloy, two-piece
Crankshaft	Forged, 5 main bearings
Crankshaft bearings	Plain bearings
Connecting rods	Forged
Con-rod bearings	Plain bearings
Pistons	Light-alloy, forged
Cylinders	Light-alloy
Cylinder head	Light-alloy
Valve guides	Pressed in, special brass
Valve arrangement	2 intake, 2 exhaust, overhead in V inclination
Valve gear	2 overhead camshafts, hydraulic flat-base tappets
Camshaft	Without bearing shells, located in cylinder head
Camshaft drive	Toothed belt and internal chain with electric/hydraulic adjustment
Balance shafts	Forged
Balance shaft bearings	Plain bearings with bearings shells
Balance shaft drive	Toothed belt
Valve clearance	Automatic adjustment (hydraulic)
Basic valve timing	Intake opens 7.5 deg. after TDC Intake closes 52 deg. after BDC Exhaust opens 31 deg. before BDC Exhaust closes 1 deg. after TDC
Torque valve timing	Intake opens 7.5 deg. before TDC Exhaust closes 37 deg. after BDC Exhaust opens 31 deg. before BDC Exhaust closes 1 deg. after TDC

Printed in Germany - II, 1991

Engine cooling

Type	Closed cooling system with antifreeze protection down to - 30°C (nordic countries - 40°C)
Fan drive	Electric fan with temperature switch

Engine lubrication

Type	Forced-feed circulation lubrication with crescent-type gear pump
Oil cooling	External, thermostatically controlled air/oil cooler
Oil filter	Full-flow type
Oil pressure	0.6...8 bar, min. 3.0 bar at 3,000 rpm
Oil pressure indicator	0...5 bar, electric gauge with warning light contact
Oil consumption	Up to 1.5 l / 1,000 kms
Exhaust system	2 Twin-tube mainfolds, downpipe to catalytic converter, center muffler, rear muffler
Emission control	Oxygen sensor control with 3-way catalytic converter (metal carrier)
Heating	Hot-water heating with heat exchanger and fan

Fuel system

Injection system		DME
Fuel delivery		1 electric feed pump
Fuel octane requirements	RON/MON	98/88 Premium, unleaded

Printed in Germany - II, 1991

Electrical equipment

Suppression rating		ECE-R 10 and 72/245/EEC
Battery voltage	V	12
Battery capacity	Ah	63 Manual transmission (64 Tiptronic)
Alternator output	A/W	115/1610 AC
Ignition		via DME
Firing order		1 - 3 - 4 - 2
Spark plugs		Bosch WR 7 DTC 3-ground electrode
Electrode gap	mm (in.)	0.7 + 0.1 (0.028 + 0.004)

Body type

Unit-construction all-steel body, rear spoiler,
Coupé
Cabriolet

Dimensions (at DIN curb weight)

Length	mm (in.)	4320 (170.1)		
Width	mm (in.)	1735 (68.31)		
Height	mm (in.)	1275 (50.20)		
Wheelbase	mm (in.)	2400 (94.49)		
Track front			with rim	
	mm (in.)	1472 (58.2)	7J x 16	ET 52
		1457 (57.7)	7 1/2 J x 17	ET 65
Track rear	mm (in)	1450 (57.1)	8J x 16	ET 52
		1445 (57.0)	9J x 17	ET 55

Printed in Germany - II, 1991

Dimensions

Ground clearance (at max. total weight)	mm (in.)	125 (4.92)
Ramp angle (at max. total weight)	deg.	11.0
Front overhang angle (at max. total weight)	deg.	14.5
Rear overhang angle (at max. total weight)	deg.	15.5

Weights (to DIN 70020)

		Coupé Manual transmission RoW
Curb weight front	kg (lbs)	670 (1477)
Curb weight rear	kg (lbs)	700 (1543)
Curb weight total	kg (lbs)	1370 (3020)
Max. total weight	kg (lbs)	1700 (3747)
Max. axle load front	kg (lbs)	820 (1807)
Max. axle load rear	kg (lbs)	990 (2182)
Max. roof load incl. roof rack	kg (lbs)	75 (165) with genuine Porsche roof transportation system

Printed in Germany - II, 1991

Capacities

Engine	Use only approved engine oils. Refer to Technical Information manual
Engine oil quantity	approx. 6.5 l (with filter) Refer to measurement level on oil dipstick according to Owner's Manual
Transmission with differential	approx. 2.75 l
Tiptronic	approx. 7 l
Final drive	approx. 0.7 l
Fuel tank	approx. 74 l (reserve approx. 8 l)
Brake fluid reservoir	approx. 0.2 l
Washer fluid reservoir and headlight washer system	approx. 6.5 l
Engine coolant	approx. 7.8 l
Power-assisted steering	approx. 1.0 l

Performance

		Manual transmission
Max. speed	km/h (mph)	252 (156)
Acceleration 0 to 100 km/h	s	6.5
1000 m from standing start	s	26.6

Climbing performance

		Manual transmission
In %	1st	60%
	2nd	46%
	3rd	30%
	4th	21%
	5th	15%
	6th	12%

Printed in Germany - II, 1991

Lifting the vehicle

The car jack, the trolley jack and the support plates of the lifting platform may only be used to lift the car at the jacking points shown below.

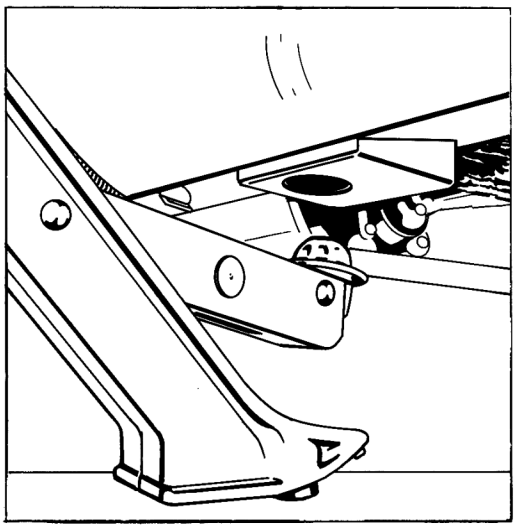

front 846-03

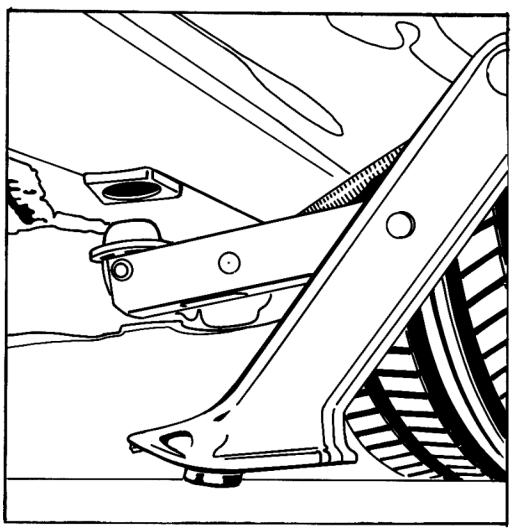

rear 847-03

The jacking point at the front side member may still be used to raise the vehicle on the lifting platform.

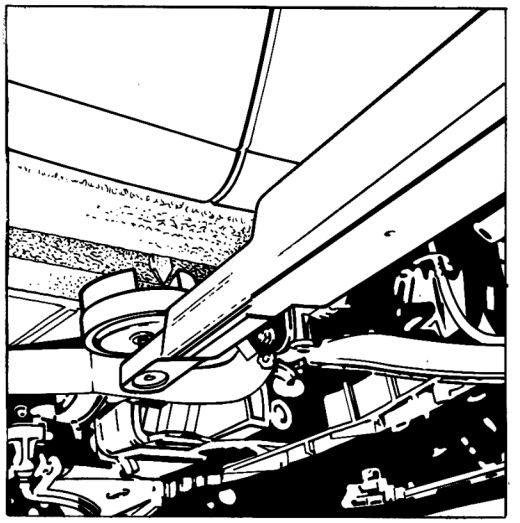

848-03

Never raise the vehicle at the oil pan or the transmission since this may cause severe damage.

Printed in Germany – II, 1991

PORSCHE

Centre's stamp

Maintenance

Working instruction to order no.

Vehicles as from model year 1992

VIN _____

☐ Maintenance every 20,000 km/12,000 mls

(working position 03 20 00..)

Type ⇨

The terms "inspect" and "check" include all associated work such as adjustments, readjustments, corrections and replenishment. They do not include the repair, replacement or overhaul of components or assemblies. The maintenance points stated above are valid for all vehicle types of the model line in question.

	968	911 Turbo	911	928
Diagnosis system: Read out fault memory	●	●	●	●
Change engine oil and oil filter	●	●	●	●
Check valve clearance		●	●	
V-belt or Polyrib belt: Check condition and tension	●	●	●	●
Toothed belt for camshafts: Check condition and tension				●
Toothed belt for power steering: Check condition		●	●	
Toothed belt tensioner: Check oil level				●
Change spark plugs (only on vehicles without catalytic converter)	●	●	●	●
Check boost pressure safety switch		●		
Visual inspection for leaks: Oils and fluids	●	●	●	●
Coolant hoses: Check condition Radiator: Visual inspection for external fouling Coolant: Check level and anti-freeze content	●			●
Air filter: Replace filter element				●
Crankcase ventilation: Check tightness of hose connections		●	●	●
Fuel system: Visual inspection for damage, correct position and tightness of connections	●	●	●	●
Intake air system: Check hoses, lines and connections for tightness	●	●	●	●
Handbrake: Check free travel of handbrake lever	●	●	●	●
Brake system: Visual inspection of brake pads and disks for wear	●	●	●	●
Brake hoses and lines: Visual inspection for damage, correct position and corrosion, check brake fluid level. For 928: Visual inspection of components for Tire Pressure Monitoring System	●	●	●	●
Clutch: Check play or final position of clutch pedal	●	●	●	●
Throttle valve actuation: Check for ease of movement and full throttle position	●	●	●	●
Resonance flap: Check operation			●	●
Steering gear: Visual check of bellows for damage Track rod links: Check play and dust caps	●	●	●	●
Power steering: Check fluid level	●	●	●	●
Axle joints: Visual inspection of dust caps for damage Screw connections of suspension adjustment system: Check for tightness front and rear	●	●	●	●
Front wheel bearings: Check play	●			●
Manual transmission/axle drives: Check oil level	●	●	●	●
Automatic transmission: Check fluid level	●		●	●
Drive shafts: Visual inspection of sleeves for leaks and damage	●	●	●	●
Exhaust system: Visual inspection for leaks and damage, check attachment	●	●	●	●
Tires: Check condition and pressure (928 with system tester)	●	●	●	●
Door hinges: Lubricate		●	●	
Check door, lid locks and safety hooks on front lid for tightness and operation	●	●	●	●
Hinges for rear lid: Lubricate				●
Safety belts: Check operation and condition	●	●	●	●

Continuation p.t.o.

Copyright by
Dr. Ing. h.c. F. Porsche AG
KD-Technik
Printed in Germany - 8/91

Maintenance every 20,000 km/12,000 mls

Type ⇨	968	911 Turbo	911	928
Seals for doors, compartment lids and roof: remove abraded rubber, Apply suitable lubricant	●	●	●	●
Check operation of vehicle lighting All headlights: Check setting Horn: Check operation	●	●	●	●
Pop-up headlights: Lubricate linkages	●			●
Windshield washer, headlight washer: Check fluid levels and nozzle settings; in the winter months top up with anti-freeze as necessary.	●	●	●	●
All other electrical equipment as well as indicator and warning lights: Check operation	●	●	●	●
Ignition circuit 1 and 2: Check operation			●	
Additional:				
☐ **every 40,000 km/24,000 mls**				
Automatic transmission: Change fluid, clean ATF strainer or change filter	●		●	●
Replace fuel filter	●	●	●	●
Air filter: Replace filter element	●	●	●	
Auxiliary air pump: Replace filter element		●		●
Toothed belt for balance shafts: Check condition and tension	●			
Toothed belt for camshafts: Check condition	●			
Replace spark plugs (only in vehicles with catalytic converter)	●	●	●	●
☐ **every 80,000 km/48,000 mls**				
Manual transmission/axle drives: Change oil	●	●	●	●
Automatic transmission: Change oil in axle drive	●		●	●
Toothed belt for camshafts: Replace (Check tension of balance shaft belt after 3,000-4,000 km/2,000-2,500 mls if replaced.)	●			
☐ **every 100,000 km/60,000 mls**				
Replace toothed belt for camshafts (check tension after 3,000-4,000 km/2,000-2,500 mls)				●
☐ **Yearly – after the first 2 years**				
File Status Report for Long-life guarantee	●	●	●	●
☐ **every 2 years**				
Change brake fluid	●	●	●	●
Change coolant	●			●
☐ **after 4, 8 and 10 years, thereafter every 2 years**				
Check airbag system	●	●	●	●

Signature (mechanic): _____

Test drive:

Foot brake and handbrake, clutch, automatic speed control, steering, heating, air conditioning and instruments: Check operation	●	●	●	●
Visual inspection for leaks: Oils and fluids	●	●	●	●

Signature (final control) _____

PORSCHE

Centre's stamp

Maintenance

Working instruction to order no.

VIN _____

☐ Maintenance 3,000 to 4,000 km/2,000 to 2,500 mls

(working position 03 01 00 ..)

Type ⇨

The terms "inspect" and "check" include all associated work such as adjustments, readjustments,corrections and replenishment. They do not include the repair, replacement or overhaul of components or assemblies. The maintenance points stated above are valid for all vehicle types of the model line in question.

	968	911 Turbo	911	928
Tires: Check condition and pressure (928 with system tester)	●	●	●	●
Front axle: Check toe adjustment				●
Diagnosis system: Read out fault memory	●	●	●	●
V-belt and Polyrib belt: Check tension		●		●
Toothed belt for camshafts: Check tension				●
Toothed belt for balance shafts: Check tension	●			
Visual inspection for leaks: Oils and fluids	●	●	●	●
Coolant: Check level	●			●
Windshield washer, headlight washer: Check fluid level, in winter months top up with anti-freeze as necessary	●	●	●	●
Check operation of lighting system	●	●	●	●
Exhaust system: Visual inspection for leaks and damage	●	●	●	●
Test idle speed		●		
Perform system adaptation; on vehicles without catalytic converter: Test CO content			●	●
Convertible top: Check operation	●	●	●	

Signature (mechanic):_____

Test drive:

Foot brake and handbrake, clutch, automatic speed control, steering, heating, air conditioning and instruments: Check operation	●	●	●	●
Visual inspection for leaks: Oils and fluids	●	●	●	●

Signature (final control): _____

Copyright by
Dr. Ing. h.c. F. Porsche AG
KD-Technik
Printed in Germany - 8/91

☐ Recommended Yearly Maintenance

Vehicles with a low yearly mileage between two required service intervals (working position 03 50 00...)

Type ⇨

The terms "inspect" and "check" include all associated work such as adjustments, readjustments, corrections and replenishment. They do not include the repair, replacement or overhaul of components or assemblies. The maintenance points stated above are valid for all vehicle types of the model line in question.	968	911 Turbo	911	928
Visual inspection for leaks: Oils and fluids	●	●	●	●
Diagnosis system: Read out fault memory	●	●	●	●
Handbrake: Check free travel of handbrake lever	●	●	●	●
Brake system: Visual inspection of brake pads and disks for wear	●	●	●	●
Check brake fluid level	●	●	●	●
Steering gear: Visual inspection of bellows for damage Track rod joints: Check play and dust caps	●	●	●	●
Axle joints: Visual inspection of dust caps for damage	●	●	●	●
Drive shafts: Visual inspection of cup seals for leaks and damage	●	●	●	●
Exhaust system: Visual inspection for leaks and damage, check attachment	●	●	●	●
Tires: Check condition and pressure (928 with system tester)	●	●	●	●
Seals for doors, compartment lids and roof: remove abraded rubber Apply suitable lubricant	●	●	●	●
Check operation of lighting system	●	●	●	●
Windshield washer, headlight washer: Check fluid level and nozzle settings; in the winter months top up with anti-freeze as necessary.	●	●	●	●
Battery: Check electrolyte level and density	●	●	●	●
All other electrical equipment as well as indicator and warning lights: Check operation	●	●	●	●
File Status Report for Long-life guarantee (after the first 2 years)	●	●	●	●

Signature (mechanic)_____

Test drive:

Foot brake and handbrake, clutch, automatic speed control, steering, heating, air conditioning and instruments: Check operation	●	●	●	●
Visual inspection for leaks: Oils and fluids	●	●	●	●

Signature (final control) _____

Diagnosis system:

Read out the fault memory

The procedure for reading out the fault memory is described in the operating instructions for System Tester 9288. A copy of the operating instructions is supplied with each tester.

The System Tester 9288 is connected to the vehicle via a 19-pole socket outlet.

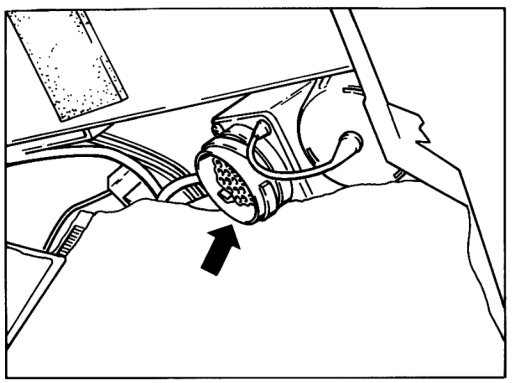

823-03

Toothed belt for for balance shafts

Checking the belt tension

Checking and adjustment operations are identical to those for the 944 S 2.

Adjustment value:
(For new and used toothed belts)

2.7 ± 0.3 scale values

Checking and adjusting tightness of power steering pump drive belt

Checking

Check tightness by applying thumb pressure on belt at point midway between two pulleys. Deflection: approx. 5 mm.

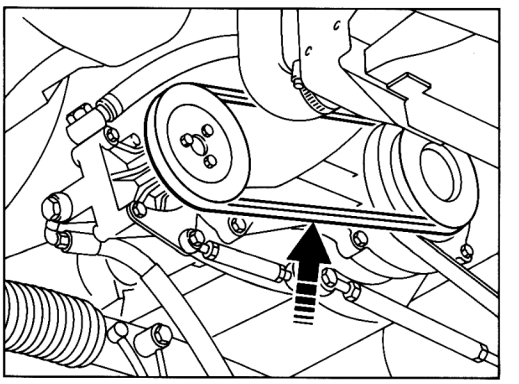

858-13

Adjusting

1. Remove splash shield.

2. Loosen upper mounting bolt or nut slightly.

Printed in Germany – II,1991

3. Loosen hexagon head bolts of connecting rod slightly.

Loosen lock nuts of connecting rod and turn connecting rod accordingly until the correct belt tightness is reached.

4. Tighten mounting bolts and nuts after finishing adjustment.

Polyrib drive belt of alternator or a/c compressor

1. Loosen hexagon head bolts of connectrod slightly. Loosen lock nuts of connecting rod and turn back connecting rod one turn (reduces tension).

2. Prepare Special Tool 9201 for checking. Pull out lockpin on special tool and slide out testing pin opposite the lockpin completely. Place drag needle on indicator needle. Slide special tool on to the drive belt. Push in testing point (arrow) slowly until the lockpin is felt to engage, and read the displayed value from the dial gage.

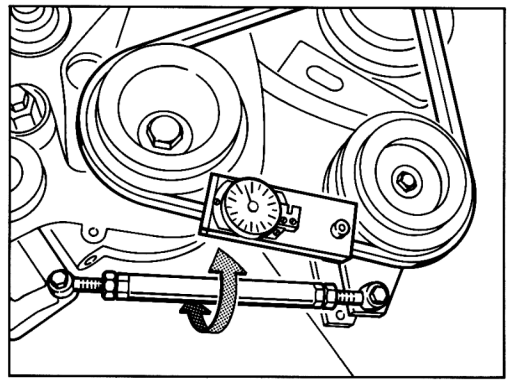

857-13

Note

The slides must have complete contact on the belt surface.
The special tool must not be turned or moved on the belt while checking.

Printed in Germany – II,1991

Adjustment value without air conditioning
Turn link rod until an adjustment value of 9.5 scale values is reached.

Adjustment value with air conditioning
Adjustment specification modified, refer to page 03 - 18a.

Changing engine oil and engine oil filter

Requirements:

Engine at operating temperature.

1. Undo and remove oil filler cap.
2. Remove oil drain plug from oil pan and drain engine oil.
3. Undo oil filter with oil filter wrench (Special Tool 9204). Drain remaining oil into suitable container.
4. Clean drain plug. Always replace seal. Tightening torque: 50 Nm (37 ftlb).
5. Oil seal of oil filter lightly, tighten by hand until seal is seated, tighten by one more turn. Use oil filter wrench to check tight seating of filter afterwards. Guide value for tightening torque: 20 Nm (15 ftlb).
6. Fill in engine oil, warm up engine to operating temperature and check tightness.
7. Check oil level with engine turned off.

Parking brake:

Checking free play of parking brake lever

The parking brake system is fitted with asbestos-free brake pads. The parking brake fitted with asbestos-free brake pads must not be adjusted in such a manner that the pads must "grind free" in operation.

If the parking brake lever can be pulled by more than 4 teeth under moderate pulling force without showing any sign of braking effect, the parking brake must be readjusted.

Adjusting the parking brake

1. Remove rear wheels.
2. Release parking brake lever and push back rear-axle disc until the brake pads rotate freely.
3. If required, slacken adjusting nut at tension jack of parking brake lever far enough to release the tension of the cable.
4. Use a screwdriver to reach through the bore in the brake disc and reset the adjuster until the wheel can no longer be turned. Then turn adjuster back again until the wheel can be rotated freely. Now turn back by two more teeth (loosening). Repeat operation on the other wheel.
5. Tighten parking brake lever by two teeth and turn adjuster nut at tension jack of parking brake lever until both wheels can hardly be rotated manually any more.
6. Release parking brake lever and check if both wheels rotate freely again.
7. Lock adjusting nut at tension jack.

Printed in Germany – XI, 1994

Brake system:

Visual inspection, checking the brake pads and brake disk for wear

Note

Brake pads must be replaced for the complete axle when the brake-pad warning lamp lights up, but at the latest when the pads have worn down to 2 mm. If the brakepad wear is indicated by the warning lamp, the warning contact (sensor including cable and connector) must also be replaced. It is possible to avoid replacing the warning contact if the brake pads are replaced when worn down to 2.5 mm at the latest. Warning contacts must be replaced if the core of the cable has been exposed. If only the plastic part of the warning contacts has been rubbed, however, it is not necessary to replace it.

1. To check the rear brake pads, remove the **rear wheels***. The front pads can be checked with the wheels remaining on the car.

2. Check the brake pads for war by means of a visual inspection.

The wear limit has been reached when the brake pads is worn down to 2 mm.

* Note instructions on page 44 - 03 (fitting of Cup-Design wheels).

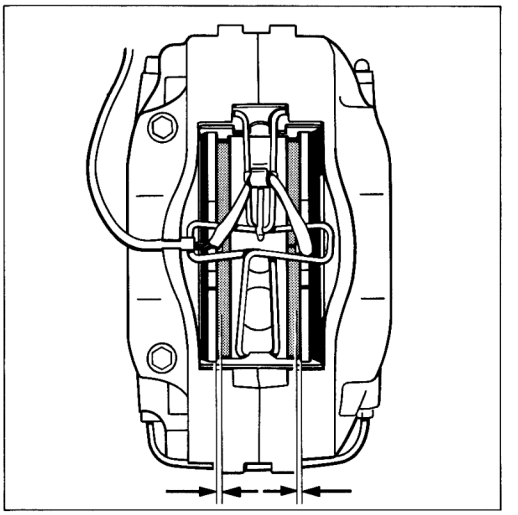

578-46

Checking the brake fluid

The brake fluid level must be between the min. and max. mark on the reservoir.
Use only DOT 4 brake fluid.

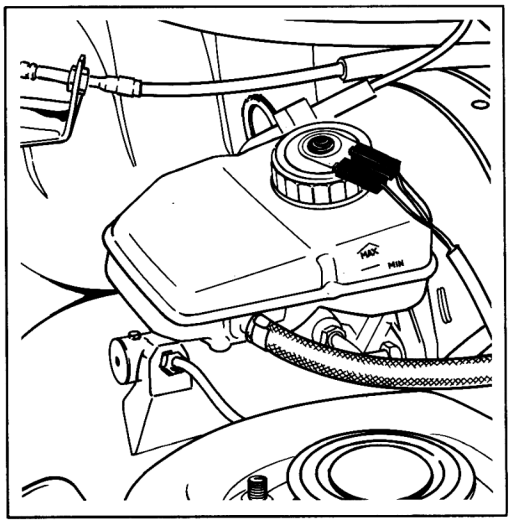

BA-03

Printed in Germany – XI, 1994

Clutch:

Checking clutch free play and pedal end position

The clutch master cylinder is provided with internal stops. Free play adjustment is therefore no longer required.
The pedal end position must still be checked, however, for smooth clutch operation.

Depress clutch pedal at the pedal plate for a couple of millimeters and release again.
The pedal must return to its initial position (end position of clutch master cylinder) under its own force.

Pull back and check at pedal plate if pedal has actually reached the end position.
On vehicles with cruise control, check cruise control switch position if required.

Steering gear:

Checking rubber boots visually for cracks and damage

Tie rod ends:

Checking free play and dust bellows

Check all unions to steering gear and tie rods as well as operation and sealing quality of dust boots, rubber bellows and joints.

The rubber boots and bellows at the steering gear and the tie rods may have been damaged due to esternal forces, e.g. by stone hips or when working on the axle. If the dust boot is found to be leaky, replace the joint or tie rod, respectively, since the joint will then deteriorate rapidly due to ingress of dirt and water.

Power-assisted steering:

Checking fluid level

General

Damage to the power-assisted steering system is often due to lack of oil in the hydraulic system. Even minor leaks may cause fluid to escape due to the high hydraulic system pressure, thus damaging the power pump.

Grunts that become audible when turning the steering wheel or foaming in the reservoir indicate lack of oil and/or air drawn into the system. Before topping up the reservoir, however, remedy any leaks present on the intake side and replace damaged parts on the feed side.

Note

For adjustment of the drive belt, refer to page 03 - 1.

Checking fluid level of the power steering system

The reservoir is fitted on the right-hand side of the engine compartment (on the wheel housing panel).

Printed in Germany – II, 1991

With the engine at idle, check the ATF-fluid (ATF-Dexron II D) without moving the steering. The correct level is between the min. and max. marks on the reservoir.

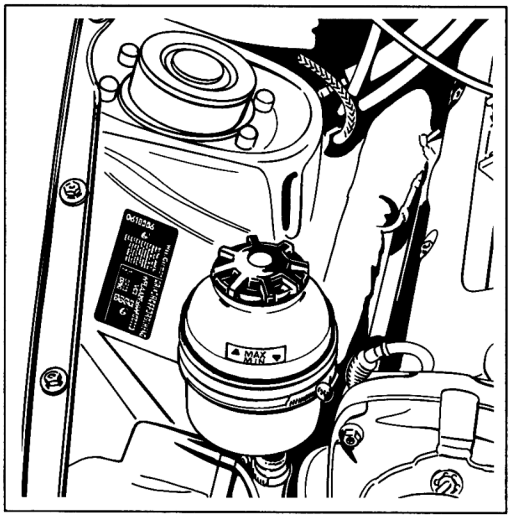

844-03

Axle Joints

Visual inspection for damage to the dust caps

Check the dust caps for the axle joints (ball joints) on the wheel suspension as follows:

- Drive the vehicle onto the lifting plattform, steering lock released.
- Turn the front wheels as far as the stop.
- After cleaning, carry out a visual inspection of the visible areas to the left and right. Press the rubber caps back with your figures and look for concealed cracks.
- After turning the front wheels to the stop in the other direction, check the remaining rubber caps.

Note

It is not possible to carry out a visual inspection on a small area around the brake cover panels. Check this area by touch.
If a rubber cap is found to be leaky, the respective joint must be replaced as it will be destroyed by the penetration of dirt or moisture.

Printed in Germany – II, 1991

Adjusting the running gear:

Checking nut and bolt connections of front and rear running gear adjusters for tightness

When checking the specified tightening torques, use a second wrench to lock so as not to give false readings of the adjustment values.

Front axle:

Connection of strut to steering knuckle (camber adjustment). Tightening torque 120 Nm (88 ftlb) (Fastening screw and camber eccentric).
Start by checking the tightening torque of the bottom bolt connection. Upper bolt connection (camber eccentric): Lock at eccentric bolt.

Caster adjustment (eccentric at A-arm and mount). Tightening torque 100 Nm (74 ftlb). Lock at caster eccentric.

Rear axle:

Connection of trailing arm to rear axle radius rod (camber and kingpin inclination adjustment).
Tightening torques:
Lock nut to camber eccentric = 90 Nm (66 ftlb)
Fastening screw = 103 Nm (76 ftlb).
Start by checking the tightening torques of the fastening screws.

Adjusting the front wheel bearings

Wheel bearing clearance is adjusted correctly when the thrust washer may be moved by applying finger pressure using a screwdriver (but not by rotational or levering action).

1. Take off wheel. Lever off hub cap with two tire irons or Special Tool VW 637/2 (lever).

2. Remove pan head screw of clamping nut. Tighten clamping nut somewhat, rotating the hub at the same time.

3. Loosen clamping nut far enough to allow the thrust washer to be shifted barely with a screwdriver.
   When shifting the washer, do not use the hub as a support for the screwdriver.

4. Tighten pan head screw of clamping nut to 13 + 3 Nm (10 + 2 ftlb) without rotating the clamping nut.

5. Recheck adjustment by shifting the thrust washer, correct if required.

Drive shafts:

Check rubber boots visually for leaks or damage.

Printed in Germany – II, 1991

Changing the transmission oil (Manual transmission)

Capacity: approx. 2,75 l

Oil quantity:
Hypoid transmission oil SAE 75 W 90 to API GL5 or MIL-L 2105 B

1. Drain oil with the car standing on a level surface and the transmission at operating temperature.

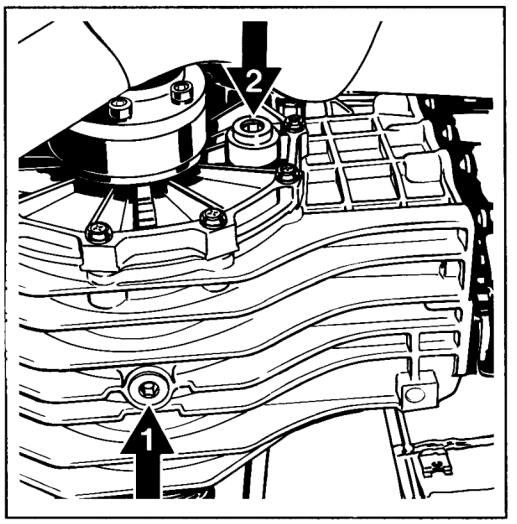

849-03

1 - Magnetic drain plug
2 - Filler plug

2. Clean drain and filler plugs, tighten plugs to 35 Nm (22 ftlb).

3. With the vehicle on a level surface, fill in transmission oil, until it overflows at the filler plug neck.

Note

On initial production cars, the thread of the filler plug in the lateral transmission covers was located 6 mm too high.
When filling those transmissions with 2,75 l of transmission oil, the oil level is 6 mm below the filler neck bore.
The relevant transmissions are identified by a **+ 6** mark above the filler plug.

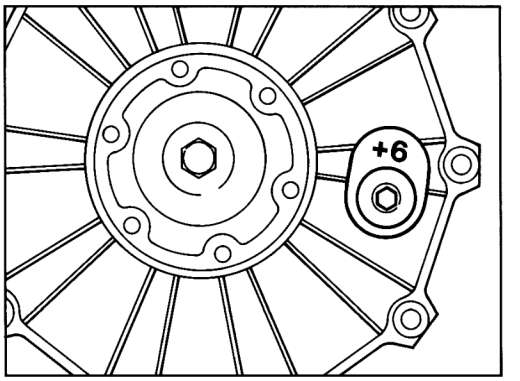

850-03

Printed in Germany – VII, 1992

Changing the transmission oil (Rear-axle drive / Tiptronic)

Capacity: approx. 0,7 l

Oil quantity:
Hypoid transmission oil SAE 75 W 90 to API GL5 (MIL-L 2105 B), or SAE 90

1. Drain oil with the car standing on a level surface and the transmission at operating temperature.

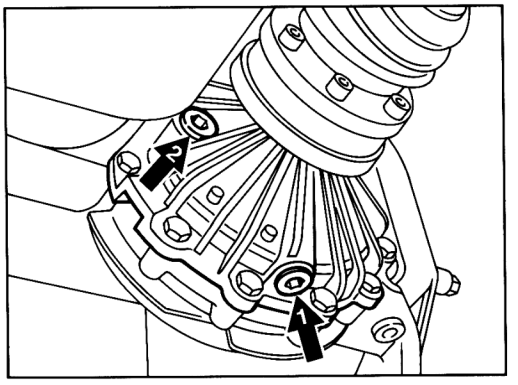

852-03

1 - Tightening torque 40 Nm (30 ftlb)
2 - Tightening torque 50 Nm (37 ftlb)

2. Clean filler and drain plugs, replace seals and tighten screws to specified torque.

3. With the vehicle on a level surface, fill in transmission oil until it overflows at the filler plug neck.

Checking the ATF level

Correct ATF level is an essential prerequisite for proper operation of the automatic transmission.

Check requirements:

Vehicle must be on a level surface

Engine running at idle

Handbrake pulled

Selector lever set to "N"

ATF temperature approx, 80°C

At 80°C operating temperature, the ATF level must be between the 80°C min. and max. marks.

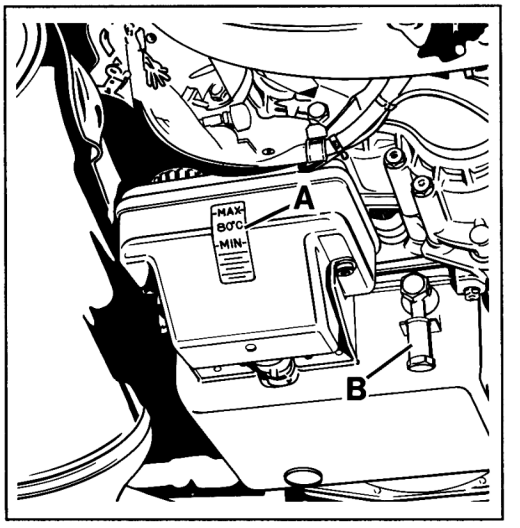

851-03

A = Check range at 80°C ATF temperature
B = Quick-fill device

To determine the precise ATF temperature, use System Tester 9288.

If required, top up with ATF fluid across the quick-fill device.

Printed in Germany – VII, 1992

Tire condition / tire pressure

Tires are safety-relevant items that are only capable of meeting the requirements applicable if they are run at the correct tire pressure and with sufficient tread depth.

The tire pressures indicated are minimum pressures. The tires must never be run at lower pressures since this affects roadholding in a negative manner and may lead to severe tire damage.

Valve caps protect the valve against dust and dirt and therefore help prevent leaks. Always screw on caps tightly and replace missing caps.

For safety reasons, do not limit tire checks to checking the tire pressure but also check for sufficient tread depth, ingress of foreign matter, pinholes, cuts, tears and bulges in the sidewalls (cord break)!

Tire pressure for cold (approx. 20°C) tires (16" and 17" summer and winter tires)

front	2.5 bar excess pressure
rear	2.5 bar excess pressure
Spare tire	
front/rear	2.5 bar excess pressure

Printed in Germany – II, 1991

Checking door, hood locks and safety catches of front lid for tightness and operation

Checking for tightness:

The fastening screws for door lock, front lid lock (Coupé and Cabriolet) and rear lid lock (Cabriolet), the fastening nuts for the upper lock sections of the front lid (Coupé and Cabriolet) and the rear lid (Cabriolet) as well as the fastening nuts for the tailgate locks (Coupé) must be tightened to 9.7 Nm (7 ftlb).

Operational check:

Door lock

The door lock must latch across the striker in two steps when the door is closed and must unlatch again when the door release (inside and outside) is actuated.

Front and rear lid lock

When closing the lids (front and rear), the lid locks must latch when the upper lock sections or the lock pins engage, and must be released again when the lid lock release is actuated.

Front lid safety catch

After releasing the lid lock, the front lid must be held down by the safety catch. The lowest point of the safety catch must engage in the locator.
With the lid open, the return spring must pull the safety catch back to the stop of the baseplate of the upper lock section.

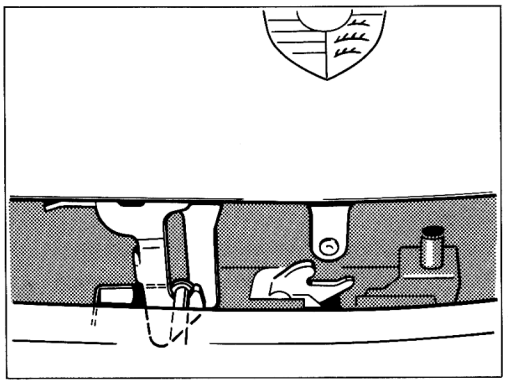

814 - 55

Seat belts

Checking operation and condition

Checking belt operation:

The belt strap must reel off the belt retractor smoothly across the deflection fitting and the belt lock tab must engage into the belt lock with an audible click. When pulling the belt abruptly, the belt retractor must lock, thus preventing further unreeling of the belt.

Checking belt condition:

Visual inspection must not indicate any damage or wear of the belt.
Should damage such as cuts, fraying, split seams, chafing etc. be evident on the belt strap, replace the seat belt immediately.

Printed in Germany – II, 1991

Additional checks on seat belts with overload indicator (tear seam) – Airbag equipment

After checking operation and condition of this seat belt type, make sure the tear seam above the holder of the belt strap is not damaged.
The tear seam serves as an overload indicator to highlight overloading and, hence, to indicate that replacement of the belt is required.

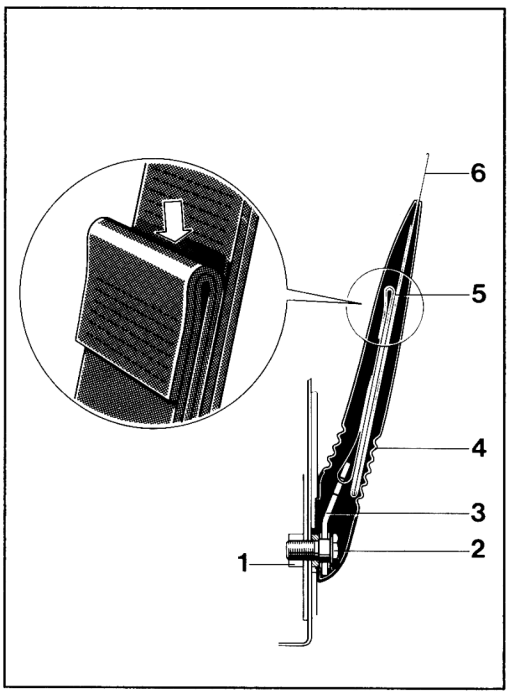

261 - 68

1 = Location of holder
2 = Fastening screw
3 = Holder
4 = Plastic cover
5 = Indicator (tear seam)
6 = Belt strap

Door, hood and roof rubber seals

Removing rubber abrasion, coating seals with suitable product

Cleaning:

Remove rubber abrasion and dirt with petroleum ether.

Maintenance:

Coat seals with glycerine, talcum or similar rubber care product.

Checking operation of lighting system:

Adjusting the headlights

1. Raise pop-up headlights.

2. Release pop-up headlights and tilt forward.

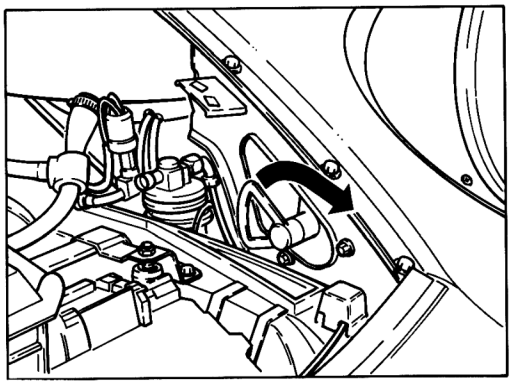

829 - 94 B

3. Remove cover shroud.

4. Tilt back pop-up headlights.

5. Clean light-diffusing lens and turn on low beam.

6. Adjust headlights with the car in roadworthy condition (fuel tank filled, driver's seat loaded with one person or 75 kg, tire pressure set to specified values), using a headlight aiming device.

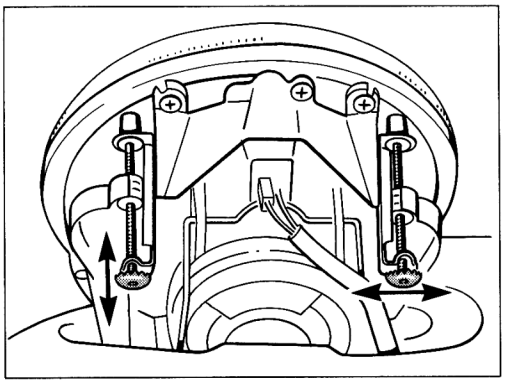

842-03

Note

Adjustment is performed with the headlight beam adjuster switch set to position 0.

Adjusting auxiliary headlights and fog lights

Note

Auxiliary headlights and fog lights can only be adjusted together.

1. Remove turn signal lights.

2. Turn on high beam.

Printed in Germany – II, 1991

3. Adjust with the car in roadworthy condition (refer to headlight section), using a headlight aiming device.

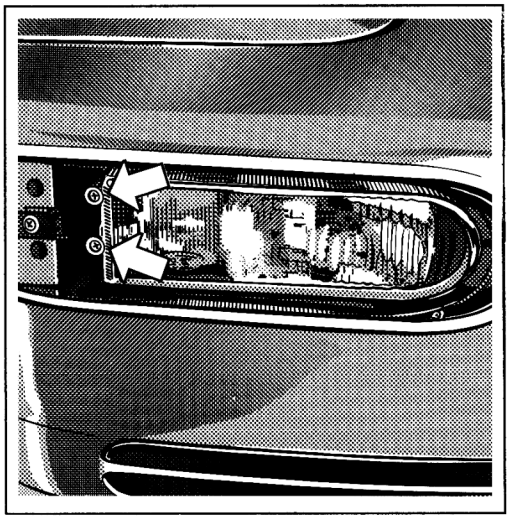

843-03

Note

Adjustment is not performed horizontally and vertically via one adjusting screw each. Instead, horizontal and vertical adjustments are made simultaneously.
References:
Turning both screws in the same direction: Lateral adjustment.
Turning both screws in opposite directions: Height adjustment.

Adjust in such a manner that the center of the light beam is within the reference marks around the central mark on the screen of the headlight aiming device.

4. Check adjustment of fog lights.

Pop-up headlights:

Greasing the linkage

Grease ball joints of link rod using commercial multi-purpose grease.

Headlight washer:

Adjusting the headlight washer jets

Special Adjusting Tool 3019 A

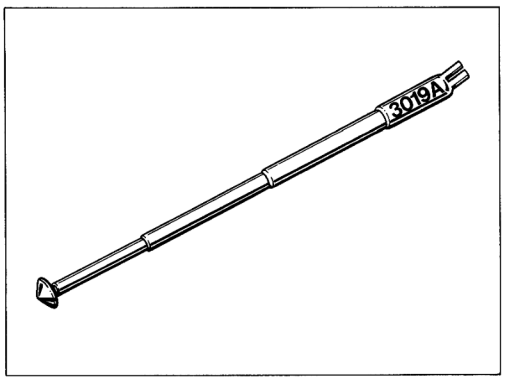

1. Insert Special Tool into sprayer jet.

2. Rotate jet insert using the tool until the telescopic extension points to the center of the light-diffusing lens.

3. Start washing operation and check operation of spray jet.

Printed in Germany – III, 1991

Replacing the fuel filter

1. Undo fuel pipes, using a second wrench to lock. Drain overflowing fuel into a suitable container.

2. Undo hose clamp and take off fuel filter.

3. Install new filter. Observe direction of flow = direction of arrow.

4. Start engine and check fuel lines and fuel filter, respectively, for leaks.

Replacing the air cleaner cartridge.

1. Unhook clamps. Take out housing lid and cartridge.

2. Clean inside of filter housing with a lint-free rag.

3. Install new cartridge. Observe installation position. Put housing lid in place and engage clamps. Check for correct seating of air cleaner upper section.

Replacing the camshaft toothed belt (with hydraulic belt tensioner)

Refer to Vol. 1, Repair Group 15, page 15 - 1.

Printed in Germany – II, 1991

Replacing the brake fluid / Bleeding the brakes

Notes

Use only clean DOT 4 brake fluid.
Total quantity for brake fluid change approx. 1 l.

The brake fluid must be replaced at least every 2 years.

Sequence of operation for bleeding and brake fluid change

- Fill reservoir with new brake fluid up to the upper edge. **Connect bleeding device to expansion tank.**
  Turn bleeding device on. Bleeding pressure approx. 1,5 bar.

- Continue bleeding or changing the brake fluid, respectively, on the other brake calipers (no special sequence to be observed).
  Open each bleeder valve until clear brake fluid or until the corresponding brake fluid change quantity per caliper (approx. 250 cm^3) is reached. note that each four-piston fixed caliper must be bled at both bleeder valves.

- To check that escaping brake fluid is clean and free from air bubbles, and to determine the brake fluid quantity used, use a suitable receiver bottle.

- After fitting a new brake master cylinder, depress brake pedal fully several times with the bleeder valves open during the bleeding operation. This allows trapped air to escape from the brake master cylinder.

- When changing the brake fluid, also drain some brake fluid from the clutch slave cylinder.

- **Turn off and disconnect bleeding device.**
  If required, top up with fresh brake fluid.

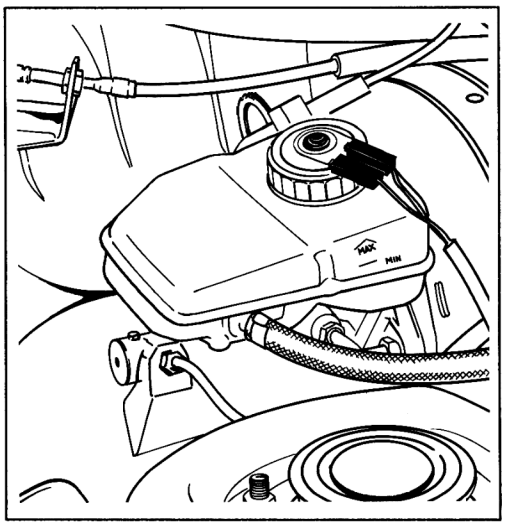

BA-03

Printed in Germany – II, 1991

Replacing the coolant and bleeding the cooling system

1. Drain cooling system (only with engine cooled off). Set heater lever to "hot", open drain plug at radiator and loosen coolant hose at auxiliary plastic flange of coolant pump.

2. Screw drain plug into radiator. Tightening torque: 5 Nm (4 ftlb). Fit coolant hose to flange

3. Leave heater lever in "hot" position or set to the hot position now and screw out bleeder screw. Fill up with coolant slowly until coolant overflows at the bleeder flange.

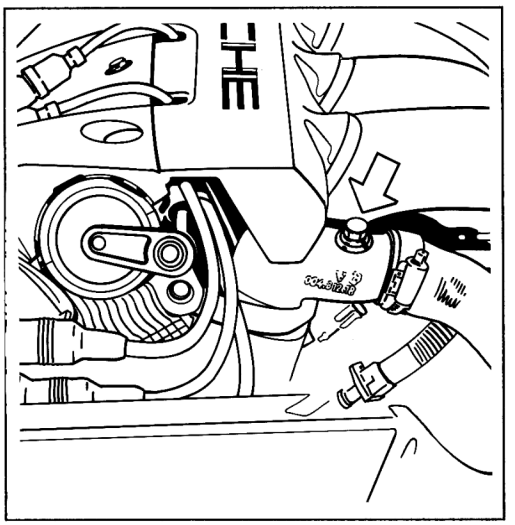

854-03

Drain some coolant until the coolant level has settled halfway down in the reservoir (this is required to keep the reservoir from overflowing when the engine warms up).

4. Turn bleeder screw a few turns in. Start engine and run at accelerated idle to warm it up to operating temperature (until radiator fan has switched on and off).

   As soon as no more air bubbles escape at the bleeder bore, tighten bleeder screw. Tightening torque 15 + 3 Nm (11 + 2 ftlb). Top up coolant level to "max:" mark on reservoir.

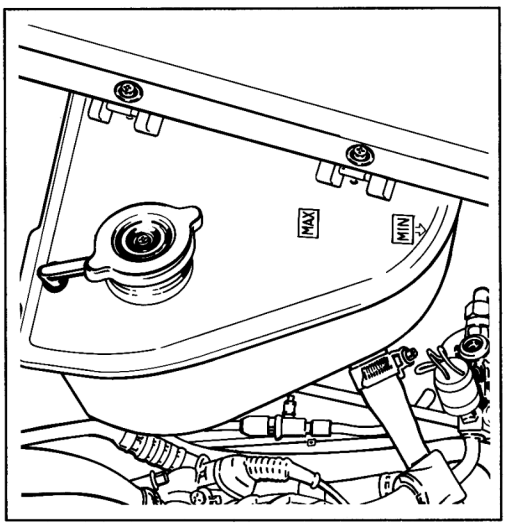

853-03

Check coolant level again after a test drive. If required, top up with coolant.

Printed in Germany – II, 1991

Replacing spark plugs

1. Pull off spark plug leads.

2. Remove spark plugs using a commercially avail. plug wrench (e.g. Hazet No. 767-1). A spark plug wrench is supplied with the tool kit.

3. Apply a light coat of **Molykote paste HTP White** to the plug threads.

Tightening torque: 25 to 30 Nm (18 to 22 ftlb)

Printed in Germany – III, 1991

Checking and adjusting Polyrib drive belt of A/C compressor

When adjusting the Polyrib drive belt, the belt thickness must be taken into account. Determine belt thickness with a caliper gauge. The following adjustment specifications are applicable in accordance with the belt thickness determined:

Scale value indications for Special Tool 9201

Belt thickness (mm)	Scale value	Link rod
4.4 - 4.8	8.5	–
4.9 - 5.2	9.5	–
5.3 - 5.6	9.5	add 1 turn

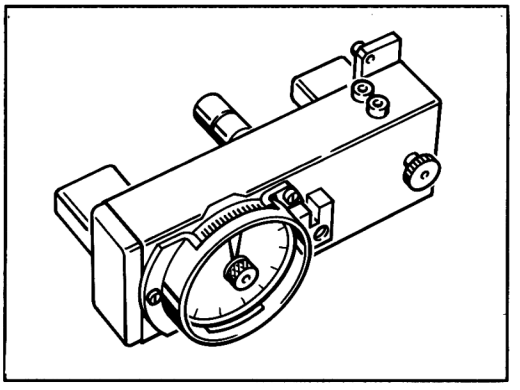

1047-13

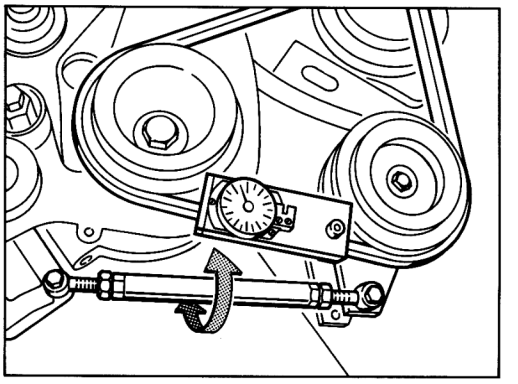

857-13

After fitting a new Polyrib drive belt, compensate the settling of the belt as follows:
Run engine at idle for approx. 15 min. or test drive vehicle for approx. 15 min. Then allow engine to cool down to ambient temperature and correct setting according to the specifications applicable to the respective belt thickness.

Printed in Germany – XI, 1994

Operating instructions for System Tester 9288

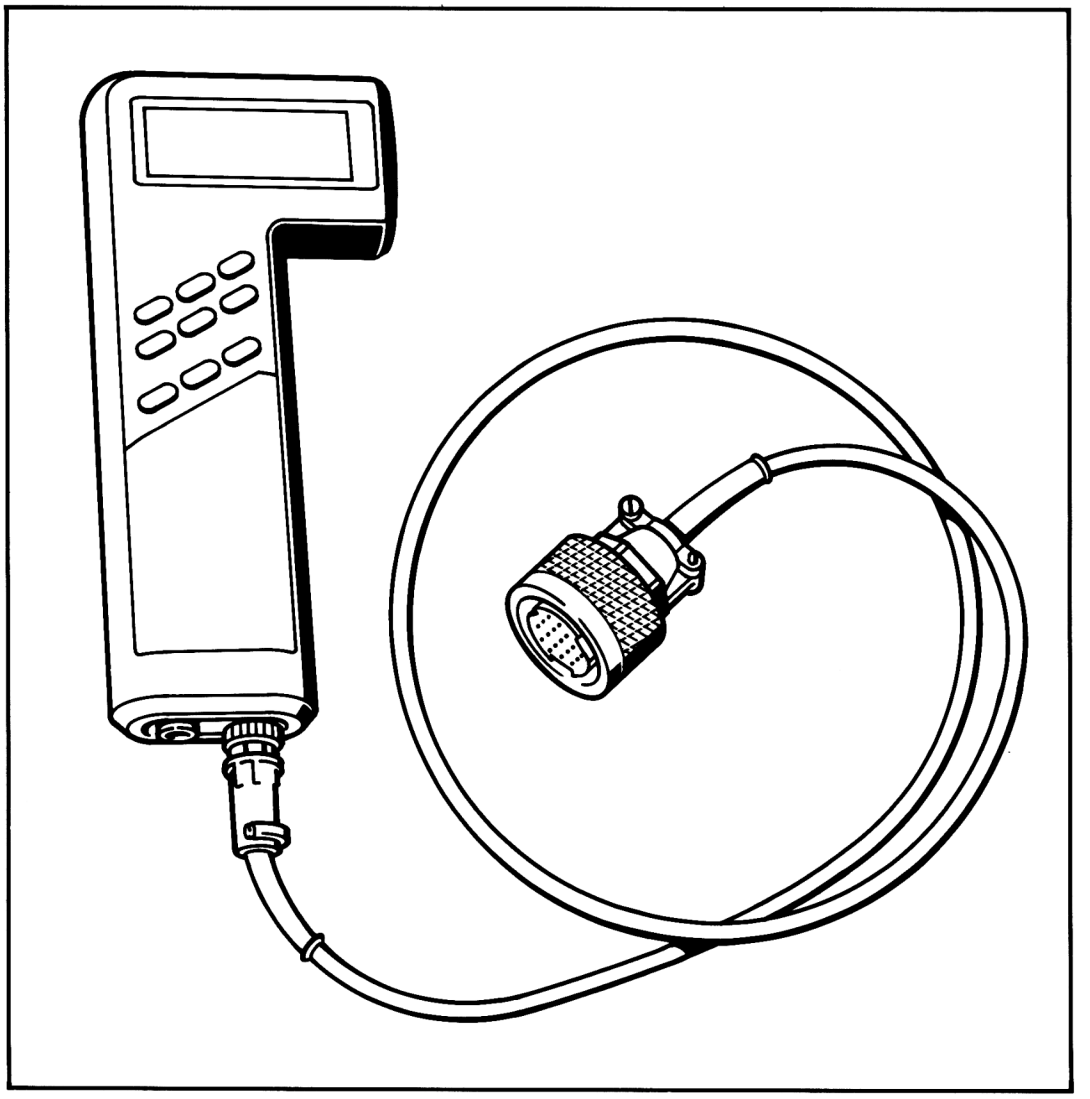

855-03

1. General information

1.1 Application

The Systemtester 9288 (BOSCH KTS 301) is a microprocessor-controlled self-diagnosis tester.

All systems which have a diagnosis interface as per ISO Standard can be tested with this tester. The following tests are possible:

- Reading out the fault memory
- Testing of the actuators
- Testing the circuit inputs
- System adaptation
- Engine-knock detection
- Sensor and status checks, tire-pressure monitoring (RDK)

The Systemtester 9288 is a high-quality piece of electronic equipment. In order to prevent damage to the equipment as a result of improper use, please read the information in the operating instructions carefully and comply with it.

In addition, the instructions (specifications) of the vehicle manufacturer are also to be observed.

If the tester should fail, check the following points before sending it in for repair:

1. Has the tester been operated incorrectly?
2. Is the battery sufficiently charged?
3. Is the adapter cable OK?
   (Please note when checking the adapter cable that a highly sensitive electronic matching circuit is installed in the vicinity of the 19-pole plug).

1.2 Construction (Fig. 1)

No.	Description	Function	Remarks
1	LCD indicator	Dot matrix 5 x 8 4 lines each with 20 characters Foreign languages possible Illumination	If the Systemtester 9288 is switched on without the program module, following the self-test the tester switches off automatically and informs the user that the program module is not fitted.
2	Keyboard	Keys 1, 2, 3 = Selection key Keys < > = Previous page/next page Key H = Help menu, e.g.: Illumination Screens stored Control-unit overview Setting up printer Switching off unit Key N = Return to the next higher program level following termination of a test sequence or, during a test sequence, return to the last display Key ⇩ = Storing indication Key ⇧ = Playing back stored reading	Switching on: = Press any key Switching off: = 180 s after last depression of a key or if no data stream flows across the serial interface. (automatic) The last field in the top right-hand corner is filled completely, this means that this is a stored figure and not an actual, real-life figure.
3	Power supply If the voltage is not sufficient, "Charge battery" appears on the display. If this is not done, the unit switches itself off.	Fitted accumulator with NiCd batteries. The Systemtester 9288 must be switched off during the initial battery charging process. Charging time > 8 hours	Discharged upon delivery. Following charge: Operating time: 4 – 8 hours without scale illumination 1 – 2 hours with scale illumination
		Connection to vehicle battery by means of vehicle-specific adapter lead (see 1.4)	Connection through ISO-interface Charging voltage supply
		Battery charger (accessory)	For test operation and for charging the NiCd batteries.
4	Connection for input and output devices	Connection facility for Printer e.g. Epson, IBM, Hewlett Packard (HP)	The Systemtester 9288 transmits data with the following configurations: 8 data bits / 1 start bit / 1 stop bit / No parity (for printer matching)
5	Connection for vehicle specific adapter lead	Reading out the data	Input for flashing-code support
6	Plug-in programme module (see also Figure 2) ⚠ C-MOS ! Do not touch plug !	Operating system LCD drive Keyboard Interface communication Computations and data conversions	Plug in module: remove rubber protector, insert module fully.

Printed in Germany – II, 1991

1.3 Battery charger run off mains voltage (Figure 3)

– Accessory –

Item 1 Charger with connecting cable, 1.5 m long

Item 2 8-pin AMP plug

1.4 Vehicle-specific adapter cable

Porsche No. 000 721 928.81

1.5 Connecting lead (Figure 4)

– Self-fabrication –

for printer, programme load station or similar unit.

For interface-trunk assignment, see manual of corresponding unit.

Printer cable for standard D 25
BOSCH No. 1 684 465 193

Printer cable for EPSON
BOSCH No. 1 684 465 194

2. Connection

The following points must be observed:

- No gear must be engaged on the vehicle (Automatic transmission in position N-P) – Danger of Accident !
- **ALL** work on the vehicle must only be carried out with the ignition switched off.

After having connected the vehicle-specific adapter cable, the instructions listed under "3" are displayed on the Systemtester 9288:

2.1 Charging with the battery charger (Fig. 3)

Connecting the Systemtester 9288 to the battery charger. (Fig.1, pos. 5).

2.2 Diagnosis

Connecting the Systemtester 9288 to the diagnosis plug in the vehicle by means of the vehicle-specific adapter cable.

Switch on the tester and proceed according to the instructions displayed.

3. Testing

Scope of module:

Guidance through the menu, communication with the ECU, reading out the error memory and selection of the "Help" menus, actuator diagnosis, circuit inputs and system adaptation, engine-knock detection, sensor and event check for the tire-pressure monitor (RDK).

3.1 Reading-out the error memory

Connect the Systemtester 9288 (see 2.)
Switch on the Systemtester,
(possible with every key!)

Display:

```
PORSCHE
Eprom modul      eng
Mod. intro.  xx.xx.xx
```

If a specific instruction does not appear in a display, it is always possible to proceed by pressing the button >.

Due to the fact that the Systemtester 9288 can store error displays (see Chapter 3.7), the following display will appear if errors have been stored in the image memory:

```
Stored displays
erased ?
1 = yes
3 = no
```

Key 3

Display:

```
Print out
displays:          H

continue:          >
```

H = Help menu (see 3.6) or key 1

Display:

```
Vehicle types
1 = 944 S
2 = 911 Carrera 4
3 = 928 S 4
```

Selection of the vehicle type with key 1, 2 or 3.

After the vehicle type has been selected, the following instruction appears:

```
Connect adapter
cable to veh. plug.
Ignition "ON".
After completion:  >
```

The following then appears:

```
Wait for
Data

Break off test:    N
```

After a short pause, the Systemtester 9288 reports all the systems that are installed in the particular vehicle. If a system is preceded by " # ", this means that at least 1 error is stored in that particular system.

Examples:

```
Installed systems
1 = # LH
2 = # EZK
3 =   RDK
```

The particular system can be selected by means of key 1, 2 or 3.

After selection (for instance with key 1), the following display appears:

```
LH
System:  L01 LH-JET
Ser. No.: 92861812313
RB. No.:  0280002507
```

After pressing the key >, a selection menu is displayed:

```
Menu
1 = Fault memory
2 = Drive links
3 = Input signals      >
```

```
< Menu
1 = System adaptation
```

In the example – press key 1. There then follows the display of the number of errors which are stored (if any).

```
Number of
faults

→ 2 ←
```

Proceed with key >

```
Additional info to
every display with
key 1
continue:              >
```

Proceed with key >

Error output:

```
1: Engine
temperature sensor 2
Short to ground
not present
```

If key 1 is pressed instead of the > key, the corresponding error code display appears (the last two digits of the flashing code).

```
Fault code: – 14 –
```

Proceed with key >

Further errors are displayed (if they exist):

```
2: Idle contact

Short to ground
present
```

If key 1 is pressed instead of key > the corresponding error-code display appears (the last two digits of the flashing code).

```
Fault code: – 12 –
```

After the last displayed error, the following instruction appears:

```
Repair fault accord-
ing to repair
instructions
Continue:              >
```

Proceed with key >

```
Fault repaired ?
1 = yes
3 = no
```

Return to display "No. of errors" with key 3.

Proceed with key 1:

```
Fault memory
1 = Erase
3 = Do not erase
```

If key 3 is pressed:
= Return to menu "error memory".

The error memory is not erased!

Proceed with key 1:

```
Fault memory
has been cleared

Return:                N
```

The test scope "Read-out error memory" is terminated at this point.

3.2 Actuator diagnosis

If an actuator is selected, this is triggered by the ECU so that it can be checked for correct functioning.

The various actuators components are gone through one after the other and are selected with the > key.

Operate the Systemtester 9288 as described under 3.1 until the following menu display appears:

```
Menu
1 = Fault memory
2 = Drive links
3 = Input signals      >
```

After pressing key 2, the display for the first actuator appears:

```
Injector
to activate
1 = Start
Continue:              >
```

If key > is pressed, the next actuator is selected.

Pressing key 1 results in the following instruction:

```
Can injectors be
heard / felt ?
1 = yes
3 = no
```

Key 1 selects the next actuator (e.g. idle actuator). Following instruction:

```
Repair fault accord-
ing to repair
instructions
Continue:          >
```

After pressing key >, the following display appears:

```
Injector
to activate
1 = Start
Continue:          >
```

Proceed with key 1

```
Can injectors be
heard / felt ?
1 = yes
3 = no
```

Proceed with key 1 to the next actuator.

```
Idle stabilizer
to activate
1 = Start
Continue:          >
```

Proceed with key 1

```
Can idle stabilizer
be heard / felt ?
1 = yes
3 = no
```

By pressing key 1, the next actuator is selected. After pressing key 3, the next instruction appears:

```
Repair fault accord-
ing to repair
instructions
Continue:          >
```

Proceed with key >

```
Idle stabilizer
to activate
1 = Start
Continue:          >
```

After pressing key 1, the following display appears:

```
Can idle stabilizer
be heard / felt ?
1 = yes
3 = no
```

By pressing key 1, the next actuator is selected. The actuators are selected one after the other and triggered until the following display appears:

```
Drive link test
completed

Return:            N
```

By pressing the key N, the operator is returned to the menu.

3.3 Circuit inputs

In addition to the actuators, the Systemtester 9288 can also check circuit inputs. To this end, operate the Systemtester 9288 in accordance with 3.1 until this menu display appears:

```
   Menu
1 = Fault memory
2 = Drive links
3 = Input signals  >
```

Press key 3

```
Idle contact
1 = Start

Continue:          >
```

By pressing key > the next circuit input is selected.

The next display appears when key 1 is pressed.

```
Activate accl. pedal
Idle contact
– closed –
Continue:          >
```

Operate the accelerator pedal, the following display appears:

```
Activate accl. pedal
Idle contact
– open –
Continue:          >
```

The next circuit input is selected by pressing key >. Repeat until this display appears:

```
Input signals
testing completed

Return:            N
```

Press key N for return to menu

3.4 System adaptation

When the function "System adaptation" is triggered, the ECU registers the basic air requirement of the engine.

To this end, operate the Systemtester 9288 as per 3.1 until the following menu display appears:

```
   Menu
1 = Fault memory
2 = Drive links
3 = Input signals  >
```

Proceed with key >

```
< Menu
1 = System adaptation
```

Proceed with key 1

```
Prerequisite:
Eng. at oper. temp.
with all consumers
and ignition off.
```

Proceed with key >

```
System adaptation
1 = Start

Return:          N
```

If key N is pressed
= return to menu.

If key 1 is pressed:

```
Start engine !
```

Following engine start there appears:

```
System is being
adapted

Please wait !
```

After approx. 30 secs there appears:

```
System adaptation
completed

Return:          N
```

If it is impossible to carry out system adaptation (idle contact not closed, or defective), the following display appears:

```
No system adaptation
possible
Idle contact ?
Return:          N
```

After completion of the system adaptation, return to the menu with key N.

3.5 Engine-knock registration

The engine-knock registration function can only be triggered through the EZK or DME control unit.

To this end, operate the Systemtester 9288 as described in 3.1 until the following display appears:

```
Installed systems
1 = # LH
2 = # EZK
3 =   RDK
```

The particular system can be selected by means of key 1, 2 or 3. For instance with key 2 the following display appears:

```
   EZK
System: E01EZK
Ser. No.: 92861812415
RB. No.: 0227400154
```

Proceed with key >
The following menu display appears:

```
< Menu
1 = Fault memory
2 = Knock registration
```

Proceed with key 2

```
Condition:
Engine at operating
temperature
                  >
```

Proceed with key >

```
< Start knock
registration before
test drive
                  >
```

Proceed with key >

```
< A normal test
drive is a pre-
requisite
                  >
```

Proceed with key >

```
< Stop the test
drive only if the
display with the no.
of knocks comes on.
```

Proceed with key >

```
Knock registration
1 = Start

Return:          N
```

Pressing key 1 activates the engine-knock counter:

```
Knock registration
in progress

Please wait!
```

The knock counter registers 10,000 ignitions before the display with the actual number of combustion "knocks" appears.

```
Number
Knocks:          xxx
Combustion:      xxxxx
Continue:          >
```

Proceed with key >

```
Knock registration
completed

Return:            N
```

If knock registration is impossible (due to lack of engine-speed signal), the following display appears:

```
No knock regist-
ration possible.
RPM signal ?
Return:            N
```

Following completion of the knock registration test, return to the menu with key N.

3.6 Help menu

The "Help" menu can be selected from every display by pressing key H. Return to the initial display with key N.

```
   Help menu
1 = Illumination
2 = Display stored
3 = Ctrl. unit chart   >
```

Proceed, for instance with key 1:

Key 1:

The scale illumination is switched on and the tester returns to the previous display.

Or with key 2:

```
Data display stored
1 = Print
2 = Clear
```

Proceed with key 1
Stored displays are printed out (If printer connected).

Proceed with key 2
Stored displays are erased.

With the "Help" menu, for instance

```
   Help menu
1 = Illumination
2 = Display stored
3 = Crtl. unit chart   >
```

if the key > is pressed, a further section of the "Help" menu is displayed:

```
< Help menu
1 = Printer setting
2 = Switch off equip.
3 = Baud Rate
```

Proceed for instance with key 1

```
Printer setting
1 = IBM
2 = HP Quiet Jet
3 = EPSON
```

The selection of the printer results in the tester being set up for the printer type in question.

3.7 Store measurement displays (Key ⇩)

Using key ⇩, all displays can be stored manually.

The following displays are stored automatically:

- ECU-Identity
- Installed systems
- All existing errors

When the memory limit is reached, the following instruction is displayed:

```
Data display mem.
full !

Return:            N
```

3.8 Show stored measurement displays (Key ⇧)

Using the keys < or >, the stored displays for the selected system can be shown.

The stored displays can be called up by means of the ⇧ key.

The system selection (LH - EZK - RDK) takes place with the keys 1, 2 or 3.

4. Service and wear parts (BOSCH)

Fig.	BOSCH Part No.	Designation	Comment
1/3	1 687 335 002	NC-battery	
4/1	1 684 483 152	Plug	
4/2	1 684 485 170	Socket	9pole
4/3	1 680 552 005	Screwed cap	
	1 684 465 193	Printer cable (Standard D 25)	
	1 684 465 194	Printer cable (EPSON)	

4.1 Service parts (Porsche)

Designation	Porsche Part No.	Special tool No.
Systemtester 9288	000.721.928.80	9288
Adapter cable	000.721.928.81	9288/1
Battery charger	000.721.928.82	9288/2
Module (D)	000.721.928.84	9288/4
Module (GB/USA)	000.721.928.85	9288/5
Module (F)	000.721.928.86	9288/6
Module (I)	000.721.928.87	9288/7
Module (E)	000.721.928.88	9288/8

Printed in Germany – II, 1991

Tolerances and Wear Limits

Engine M 44.43/44

		When fitting (new)	Wear limit
Cooling			
Coolant thermostat	opening temperature	81 to 85°C	
Cooling system cap			
Pressure relief valve	opens at excess pressure of	1.3 to 1.5 bar	
Vacuum relief valve	opens at partial vacuum of	0.1 bar	
Oil circuit			
Oil consumption	l / 1,000 km		approx. 1.5
Oil pressure at 80 deg. C oil temperature:			
at 5,000 rpm	excess pressure	approx. 4 bar	
Oil volume		6.5 l	
Quantity difference at oil gauge		approx. 1.5 l	
Oil thermostat	opening temperature	95° ± 4 °C	
Valve gear			
Camshaft bore	inside dia.	28 + 0.021 mm – 0	
Camshaft	dia.	28 – 0.04 mm – 0.055	
Camshaft	axial end play	0.08 to 0.18 mm	
Flat-base tappet bore	inside dia.	35 + 0.015 mm + 0.005	
Flat-base tappet	dia.	35 – 0.025 mm – 0.041	
Camshaft	runout	0.02 mm	

Printed in Germany – II, 1991

Tolerances and Wear Limits

Motor M 44.43/44

			When fitting (new)	Wear limit
Cylinder head with valves				
Sealing surface	distortion			max. 0.05 mm
Valve seat width	inlet		1.5 mm	
	exhaust		1.8 mm	
Seat angle			45°	
Outer correction angle			30°	
Inner correction angle			60°	
Valve guides	inside dia.		7 + 0.015 mm	
Valve stem:				
Inlet	dia.		6.98 - 0.012	
Exhaust	dia. (stem end)		6.974 ± 0.006 tapered stem	
Valve guide/valve stem	rocking clearance			
Inlet				0.8
Exhaust				0.8
Compression			8 bar and above	6.5 bar
Pistons with connecting rods				
Cylinder/piston	clearance		0.008 to 0.032	approx. 0.080
Piston rings	vertical clearance	Groove 1	0.040 to 0.075	
		Groove 2	0.030 to 0.065	
		Groove 3	0.020 to 0.055	
Piston rings	gap width	Groove 1	0.20 to 0.50	
		Groove 2	0.20 to 0.55	
		Groove 3	0.30 to 0.90	

Printed in Germany - II, 1991

Tolerances and Wear limits

Engine M 44.43/44

		When fitting (new)	Wear limit
Small end bush	dia.	24 + 0.018 + 0.028	
Piston pin	dia.	24 – 0.004	
Small end bush/piston pin	radial clearance	0.018 to 0.032	
Crankshaft and cylinder block			
Crankshaft measure at bearing 2, 3 or 4 Bearings 1 and 5 on prisms	runout	0.04	max. 0.06
Crankpin	dia.	51.971 to 51.990	
Con-rod bearing/crankshaft	radial clearance	0.027 to 0.069	
	axial clearance	0.080 to 0.240	
Main bearing web	dia.	69.971 to 69.990	
Crankshaft main bearings/ crankshaft	radial clearance	0.028 to 0.070	0.16
Crankshaft main bearings/ crankshaft	axial bearings	0.060 to 0.192	0.40
Cylinder bore	ovality	0.010	0.020
Balance shaft bearing bore in crankcase or balance shaft cover	dia.	34.000 to 34.019	
Bore for bushing in bearing housing	dia.	34.000 to 34.019	
Balance shaft	dia.	30.975 to 30.991	

Printed in Germany – II, 1991

Engine tightening torques

Location	Thread	Tightening torque Nm (ftlb)
Crankshaft/ crankcase		
Crankcase bolt joints top and bottom section (studs)	M 12 x 1.5	30 (22) 1st stage 60° torque angle 2nd stage
	M 10	20 (15) 1st stage 50 (37) 2nd stage
	M 8 M 6	20 (15) 10 (7)
Rotation body on balance shaft	M 6	10 (7), secured with Loctite 270
Cover for balance shaft housing to upper crankcase section Hexagon head bolt	M 6 M 8	10 (7) 20 (15)
Hexagon head bolt (bearing saddle)	M 8 x 58	15 (11) 1st stage 33 (24) 2nd stage
Left-hand and right-hand bearing housing to upper crankcase section	M 8	20 (15)
Sprocket on balance shaft	M 10	45 (33)
Tensioning pulley to bearing housing	M 10	45 (33)
Water pump to crankcase	M 6	10 (7), secured with Loctite 270
Idler pulley to water-pump housing	M 10	45 (33)
Tensioning pulley to oil pump housing	M 10	45 (33)
Oil pump to crankcase	M 6 M 10	10 (7) 45 (33)
Toothed belt tensioner to crankcase	M 8	20 (15)
Tensioning pulley to tensioning lever	M 10	45 (33)
Connecting-rod bolts (forged con-rods) Verbus-Ripp nut	M 10 x 1.25	25 (18) + 90° torque angle

Printed in Germany – II, 1991

Location	Thread	Tightening torque Nm (ftlb)
Oil pan to crankcase	M 6	hand-tight 1st stage 4 (3) 2nd stage 10 (7) 3rd stage
Oil pan insert to oil pan	M 5	6 (4), secured with Loctite 270
Oil drain plug	M 20 x 1.5	50 (37)
LH + RH engine support to crankcase	M 10	48 (35)
Flywheel to crankshaft	M 10 x 1.25	40 (29) 1st stage 90 (66) 2nd stage
Sensor brackets to crankcase	M 8	20 (15)
Sensor to bracket	M 6	10 (7)
Sprocket to crankshaft	M 16 x 1.5	210 (155)
Flywheel to sprocket	M 6 x 25 Grade 10.9	13 (10)
Mounting of belt cover	M 6	8 (6)
Bracket for alternator to crankcase	M 10	45 (33)
Water temperature gauge	M 10 x 1	35 (26)
Temperature sender (coolant or oil)	M 12 x 1.5	15 (11)
Knock sensor	M 8	20 (15) Genuine bolt without washer
Oil pressure sender	M 18 x 1.5	35 (26)
Housing insert in oil pump housing	M 6	10 (7), mating flange sealed with Loctite 574
Radiator fan/thermostat housing to crankcase	M 8	20 (15)
Plug at oil/coolant radiator housing	M 18 x 1.5	35 (26)
Coolant vent plug	M 8 x 1	12 + 3 (9 + 2)
Oil filter pressure relief valve	M 20 x 1.5	45 (33) 20 (15)

Printed in Germany – II, 1991

Location	Thread	Tightening torque Nm (ftlb)
Cylinder head		
Cylinder head to crankcase upper section		
Engine type M 44.43/44	M 12	20 (15) 1st stage 60° torque angle 2nd stage 90° torque angle 3rd stage
Camshaft support to cylinder head	M 8	20 (15)
Camshaft adjuster - VarioCam to cylinder head	M 6	10 (7)
Socket head bolts for chain tensioner / oil pipe	M 6	10 (7)
Banjo bolt / oil pipe	M 8 x 1	10 (7)
Cylinder head cover	M 6	10 (7)
Intake pipe to cylinder head	M 8	20 (15)
Inlet flange for heater to cylinder head	M 8	20 (15)
Flange for coolant pipe	M 8	20 (15)
Toothed belt cover to cylinder head	M 6	10 (7)
Hall sender / mounting	M 6	10 (7)
Camshaft gearwheel to camshaft multi-tooth bolt	M 10	65 - 70 (48 - 52)
Distributor rotor to camshaft gearwheel	M 4	4 (3)
Transport bracket to cylinder head	M 6	10 (7)
Spark plugs	M 14 x 1.25	25 - 30 (18 - 22); grease thread lightly with Molykote paste HTP (white)

Printed in Germany – III, 1991

Location	Thread	Tightening torque Nm (ftlb)
Fuel system		
Mounting of pressure regulator to fuel collection pipe	M 6 x 12	10
Cap nut to fuel collection pipe	M 12 x 1.5	12 (9)
Exhaust system		
Plug nut to catalytic converter	M 14 x 1.5	30 (22)
All other nuts and bolts:		
	M 6	8 + 2 (6 + 1)
	M 8	20 + 2 (15 + 1)
	M 10	40 + 5 (29 + 4)
Coat all nut and bolt unions with Optimoly HT		

Printed in Germany – III, 1991

Removing and installing engine (manual transmission)

Engine Type M 44.43

Note

The engine is removed from above. The clutch housing remains fitted to the engine.

Removal

1. Place protective covers on fenders and remove hood. Disconnect battery ground strap. Open tie-wraps at bulkhead. Disconnect cable from cruise control actuator motor and remove hood.

2. Undo fuel lines betwen engine and body, using a second wrench to lock. Catch remaining fuel in a suitable container. Do not kink fuel lines.

3. Disconnect cable for throttle operation. Pull off oxygen sensor connector and undo bracket from manifold. Pull vacuum hose off pressure regulator.

4. Undo ground cable and wire clamp from clutch housing. Pull off vacuum hose from brake booster.

5. Disconnect twin- and multi-plug connectors. Disconnect vacuum hose from tank vent valve and manifold.

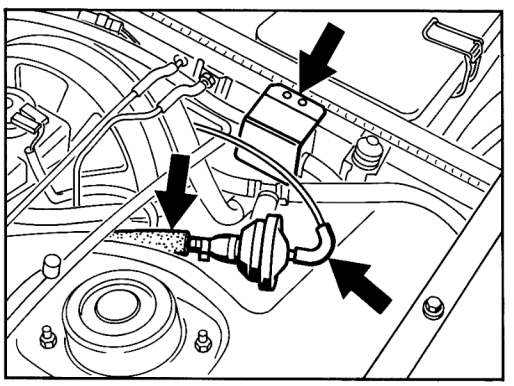

1238-10

6. Remove and take out air filter assembly.Pull off ignition cable from distributor to ignition coil.

7. Unscrew cover panel in passenger footwell and lift out. Unscrew support panel for DME control unit and pull off control unit plug. Disconnect electrical plug.

8. Remove engine undertray panel and front undertray cover.

9. Open coolant drain plug and drain coolant. Remove alternator vent hose.

10. Loosen radiator hose at bottom right-hand side of radiator and at engine and pull off hose. Catch remaining coolant in a suitable container.

11. Pull off electrical connectors from fan motors. Undo bracket for fan motors from radiator and take out from below.

12. Unbolt radiator bracket. Loosen radiator hose and vent hose on upper left-hand side of radiator and pull off. Pull off electrical connector from temperature switch of radiator.

13. Unclip radiator cover and lift radiator carefully out from above. Separate radiator hose from reservoir and pull off.

Printed in Germany - VII, 1992

14. Suspend engine at front transport bracket using support 10 - 222A and keep suspended in installation position. Check for correct position of support.

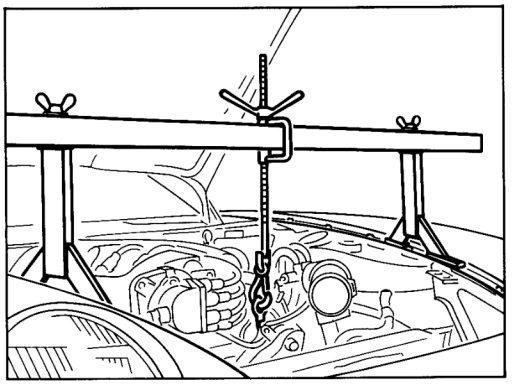

1239-10

15. Remove Poly-Rib belt tensioner from A/C compressor and take off drive belt. Remove compressor from console and suspend out of the way. (Do not undo refrigerant hoses).

16. Unbolt stabilizer bar from body. Undo hose clamps between steering ATF radiator and power steering pump top-up reservoir and pull off hoses.

17. Slacken power pump belt and lift power steering pump off the console, taking the spacer bushing out from the front. Leave power steering pump suspended at steering. Remove oil pipes from oil cooler at engine console.

18. Mark installation position of left-hand and right-hand control arm mounts on body. Undo and remove control arm mounts.

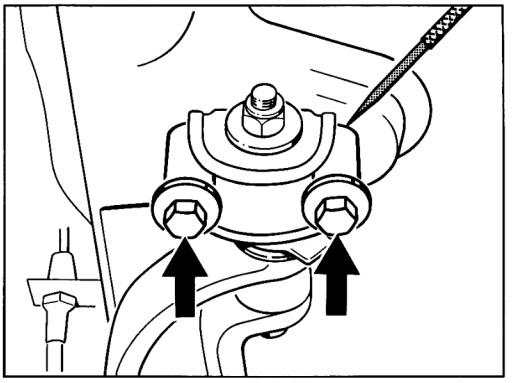

1240-10

19. Unbolt universal joint from steering rack, hydraulic engine mounts from engine supports and front-axle cross member from bodywork. The front-axle cross member remains suspended on the vehicle along with the steering rack and the power pump.

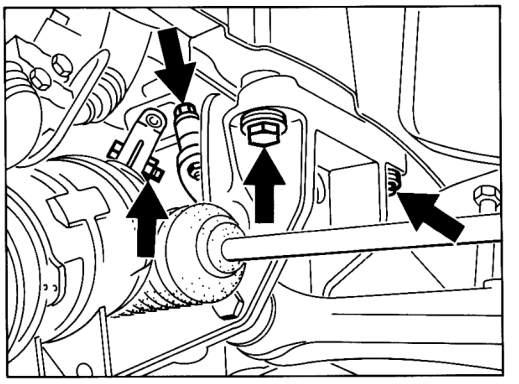

1241-10

20. Disconnect electrical connections from starter and remove starter. Remove wire clamp from clutch housing.

Printed in Germany - VII, 1992

21. Remove clutch slave cylinder from clutch housing (pipe remains connected). Undo and remove bracket for piping from upper clutch housing section.

22. Unbolt exhaust system from exhaust manifold flange and mount and remove exhaust system complete with oxygen sensor assembly.

23. Remove cover for clutch housing. Screw hex socket head bolts out of clamping sleeve and push clamping sleeve along with central shaft to the rear.

24. Screw out upper central tube / clutch housing fastening bolts.

25. Undo coolant hose for heater above exhaust manifold and at cylinder head.

26. Engage engine support (VW Special Tool 3033) into engine transport brackets as follows:
    Pulley side: Position 3
    Flywheel side: Position 11
    In position 3, the threaded rod is "below" the support. In position 11, the threaded rod is "above" the support

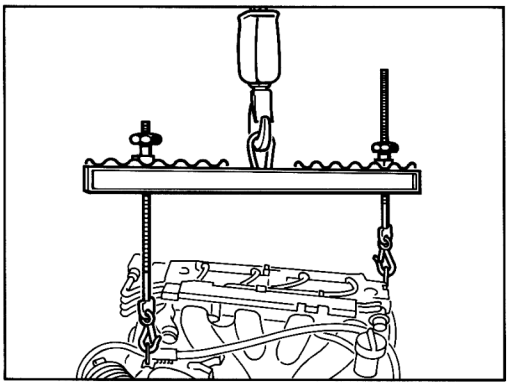

1242-10

27. Slightly preload engine with shop crane, e. g. Bilstein K 750 H, and remove support bracket 10 - 222 A. The threaded rod for support bracket 10 - 222 A remains in the front mounting eye.

28. Screw out bottom central tube / clutch housing fastening bolts.

29. Pull engine forward, push rubber bellows out of bulkhead towards engine compartment and pull wiring harness carefully out of passenger's footwell. Lift out engine in upward direction.

Installation

When installing the engine, observe the following:

1. Insert wiring harness for DME control unit carefully into passenger side footwell.

2. Start by screwing in the central tube / clutch housing fastening bolts but do not tighten them yet.

Note

Tighten down fastening bolts to specified torque only after the hydraulic engine mounts have been fitted to the front-axle crossmember.

3. Install control arm.
   The control arm mount must be fitted in exactly the same position marked before removal.

4. Check wheel alignment. Adjust if required.

5. Replace all gaskets, seals and O-rings before refitting. Check for correct location of the radiator in the rubber mounts.

Printed in Germany - VII, 1992

6. Tighten nuts and bolts to specified torque.

Tightening torques:

Clamping sleeve to central shaft	M 10	80 Nm (59 ftlb)
Central tube to clutch housing	M 10	42 Nm (31 ftlb)
Control arm to body	M 10	46 Nm (34 ftlb)
Steering universal joint	M 8	30 + 5 Nm (22 + 4 ftlb)
Cross member to body	M 12	85 Nm (63 ftlb)

7. Add coolant and bleed cooling system.

8. Top up reservoir with ATF fluid and bleed steering system.

9. Warm up engine to operating temperature, check engine oil and coolant levels again, top up if required.

Printed in Germany - VII, 1992

Removing and installing engine (Tiptronic Transmission)

Engine Type M 44.44

Note

When removing and installing the engine on vehicles with Tiptronic transmission, certain deviations from the instructions for manual transmission versions must be observed.

Removal

1. The flywheel must be separated from the damper across the starter aperture (9 bolts). The clutch housing is unbolted from the engine and remains fixed to the central tube.

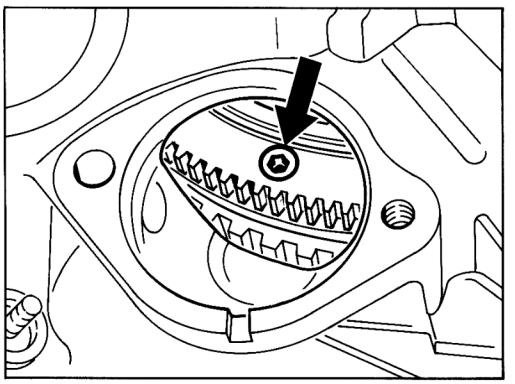

1243-10

2. Remove ATF lines from cross member, cylinder head and radiator. Plug oil apertures to avoid dirt ingress. Remove protective shield from clutch housing.

Installation

Flywheel / damper intallation note

1. Rotate flywheel until assembly mark (roll pin hole with large chamfer) points down.

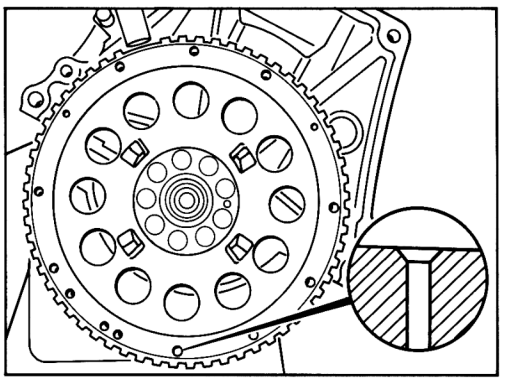

1244-10

2. Also rotate damper until positioning groove points down.

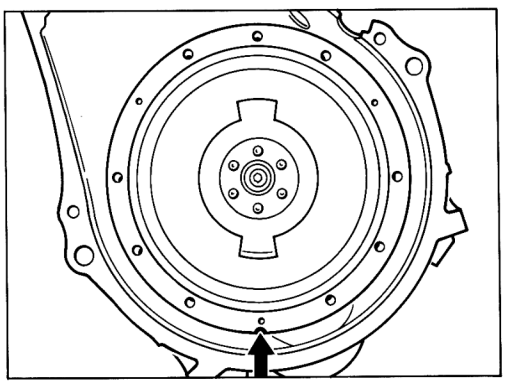

1245-10

Printed in Germany - VII, 1992

3. When fitting engine and clutch housing, make sure that both marks are lined up with each other. Tighten fastening bolts evenly.

4. Before installing the engine, coat the clutch housing/engine bolts with Optimoly TA.

Tightening torques:

Clutch housing to engine	M 12	75 Nm (55 ftlb)
Damper to flywheel	M 8	21 Nm (15 ftlb)
ATF lines to radiator		24 Nm (18 ftlb)

Printed in Germany - VII, 1992

Adjusting guide rail for balance shaft toothed belt

Engine Type M 44.43/44

1. Tighten mounting bolts of guide rail lightly.
   Fit sprocket for balance shaft drive and toothed belt.
   Put balance shaft toothed belt under preload.

2. Using a feeler gauge, measure and adjust clearance between toothed belt and guide rail.
   Adjusting dimension: 1 ±0.5 mm

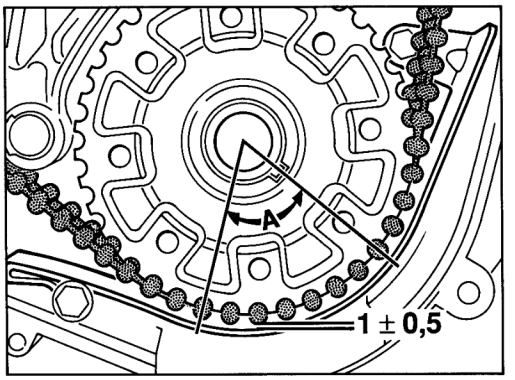

1041-13

3. Check clearance of guide rail over a length of 7 teeth (dimension A).
   The adjusting dimension must be 1 ±0.5 mm.

4. To achieve the correct adjustment, slide the guide rail in the bolt holes.

5. Tighten both hexagon head bolts of the guide rail and check setting dimension again. Take off toothed belt and sprocket and tighten both pan head screws.

6. Fit sprocket and balance shaft toothed belt and adjust according to specification.
   Refer to pages 13 - 7 to 13 - 10.

Printed in Germany – IV, 1992

Checking adjustment of balance shafts

1. Undo and remove engine underside protection and upper toothed belt cover.

2. Rotate crankshaft clockwise until TDC mark on camshaft drive sprocket is lined up with the mark on the toothed belt cover.
   The TDC mark on the flywheel (center notch on double-mass flywheel) must also line up.

3. The mark on the upper balance shaft drive sprocket must line up with the mark on the rear toothed belt cover.

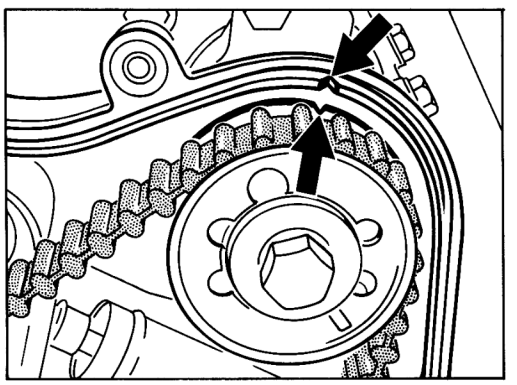

1042-13

4. Remove plug cap from lower toothed belt cover.
   Check position of marks of lower balance shaft drive sprocket across inspection hole. Mark on sprocket must line with mark on rear toothed belt cover.

The Fig. shows the sprocket position with the toothed belt cover removed.

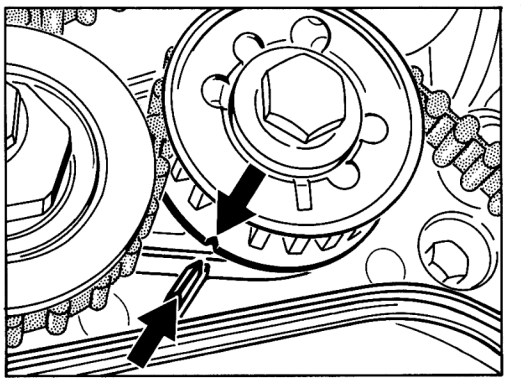

1043-13

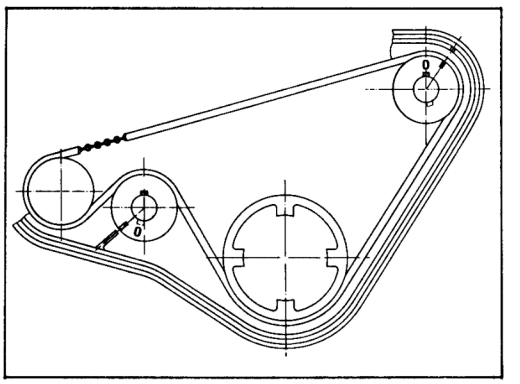

1044-13

Printed in Germany – IV, 1992

Fitting toothed belt for balance shaft

Note

Handle balance shaft toothed belt with care, avoid twisting or turning as this may cause excessive running noise. Store separately.

When replacing the toothed belt, do not undo the mounting bolts of the balance shaft drive sprockets.

1. Rotate crankshaft clockwise until the TDC mark on the camshaft drive sprocket lines up with the mark on the toothed belt cover. The TDC mark on the flywheel (center notch of double-mass flywheel) must also line up.

2. Rotate both balance shafts (without toothed belts) until the marks on the balance shaft drive sprockets are lined up with the marks on the rear toothed belt cover.

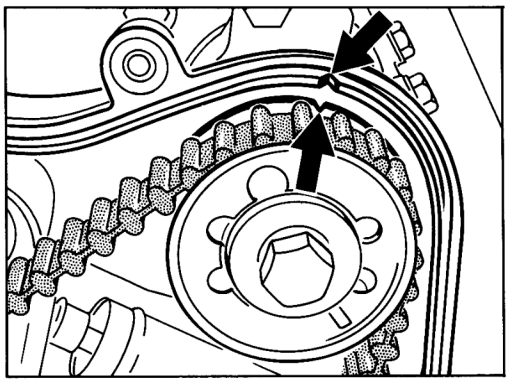

1042-13

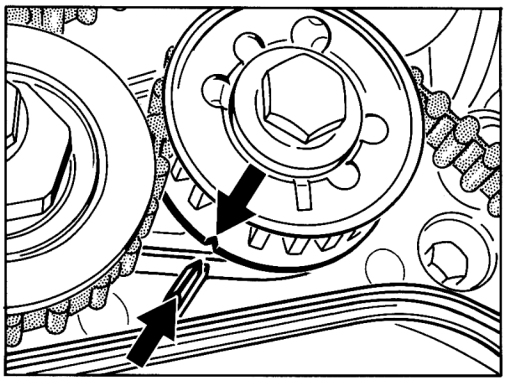

1043-13

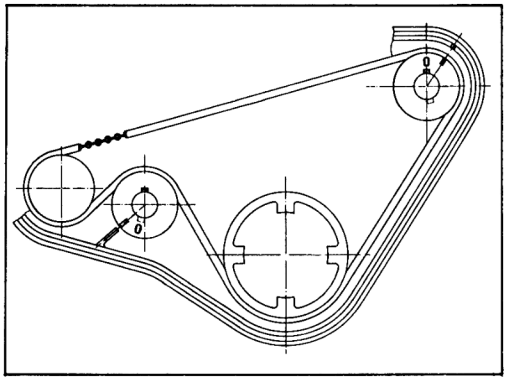

1044-13

3. Fit the toothed belt:

   When fitting the toothed belt, make sure the belt side with the color-coded tooth faces towards the outside.

4. Adjust toothed belt tension according to specification.
   Refer to page 13 - 7 to 13 - 10.

Printed in Germany – IV, 1992

Adjusting Special Tool 9201

The measuring gauge has been preset to a display of 4.0 dial values and allows the Special Tool 9201 to be checked and to be set to 4.0 dial values, respectively.

Adjustment of the device is required after:

- approx. 100 measurements
- hard shocks
- minor damage

If major damage is present or if the display deviates by more than approx. 2.0 dial values, the devices cannot be adjusted any more. Return the device to the manufacturer for repair.

Address:

Fritz Staeger
Jahnstrasse 68 - 72

D-1000 Berlin 47

Phone: 030/6291-266
Fax: 030/6291277

Adjustment

Tools required:

- Hex socket head screwdriver 1.5 A/F (for new tools)
- or screwdriver 1.6 x 40 x 0.4 (for older tools)
- Measuring gauge 9201/2

1. Adjust to zero, rotating dial ring of dial gauge until pointer and zero line up.
2. Place measuring gauge 9201/2 into position, making sure both measuring mating faces on the sliding blocks are centered. (Measuring gauges of the new type are made of one piece, allowing them to be placed into position easier).

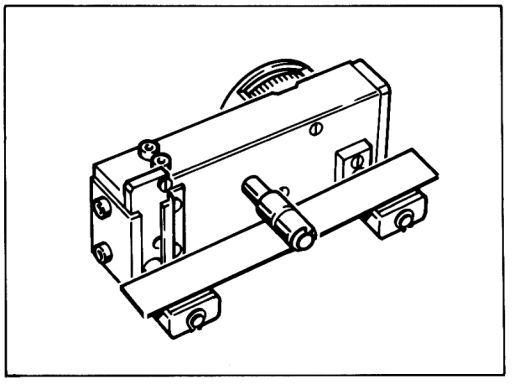

1045-13

3. Measure as when using the tool on the toothed belt, i.e. press in measuring button until engagement of the lock pin is felt, and read off displayed value on the dial gauge.

Printed in Germany – IV, 1992

4. If the display is beyond the measuring range of 4.0 ± 0.3 dial values, readjust dial gauge. To do so, use hex socket head screwdriver or standard screwdriver, respectively, to turn the adjusting screw until the specified value of 4.0 dial values is obtained. The measuring gauge 9201/2 rests between the measuring pointer of the tester.

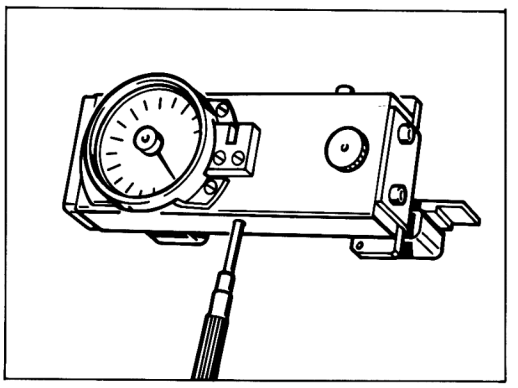

1046-13

5. Follow adjustment with another test.

Printed in Germany – IV, 1992

Checking and adjusting balance shaft toothed belt tension

Tools

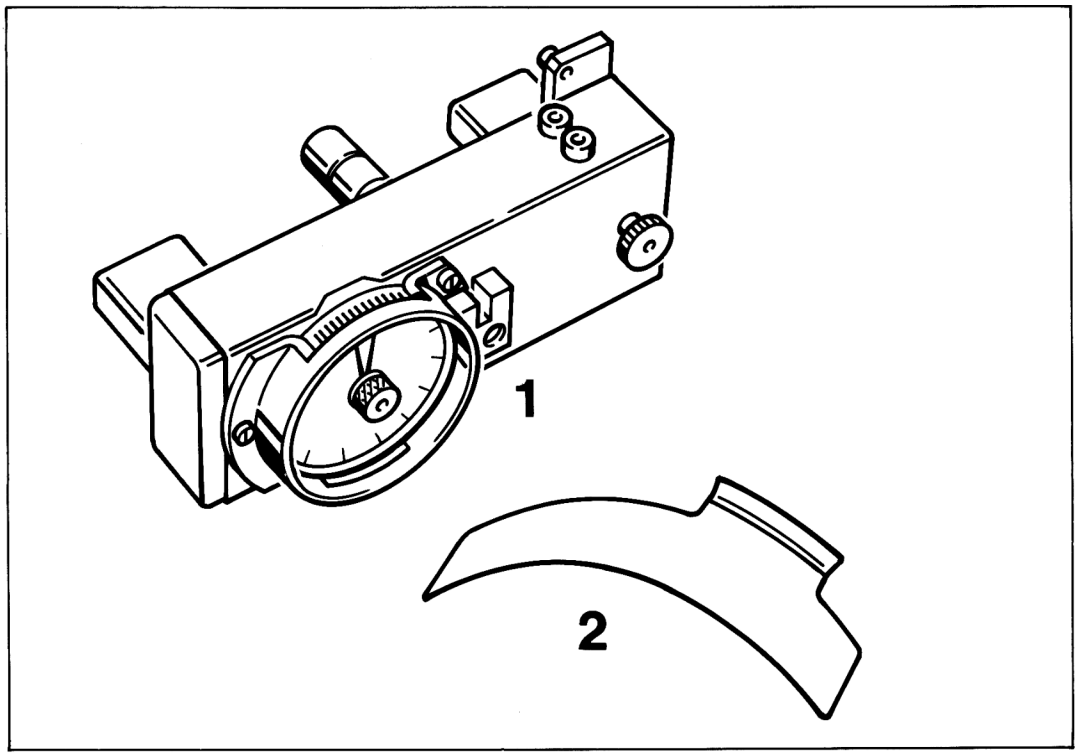

No.	Designation	Special tool	Order number	Explanation
1	Tester for belt tension	9201	000.721.920.10	
2	Adjusting gauge	9207	000.721.920.70	

Printed in Germany – IV, 1992

Checking and adjusting balance shaft toothed belt tension

Note

The toothed belt tension must be checked and adjusted only when the engine is cold (room temperature).

1. Undo and remove air cleaner assembly and engine underside protection.

2. Remove Poly-Rib belt or power pump belt, respectively.

Note

Before undoing the lock nuts, always start by slightly loosening the hexagon head bolts of the link rod.

3. Remove toothed belt cover. Undo idler until the idler no longer places a preload on the toothed belt.

4. Rotate crankshaft clockwise until TDC mark on camshaft drive sprocket lines up with mark on toothed belt cover.

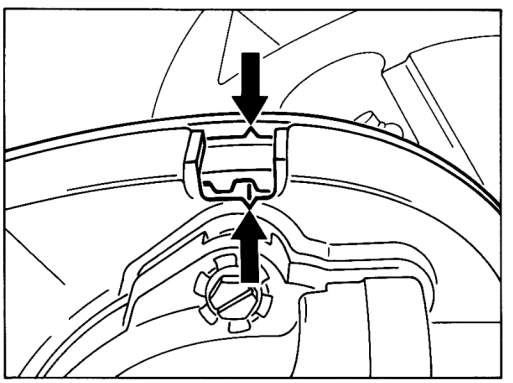

1048-13

5. The TDC mark on the flywheel (double-mass flywheel) must also line up.

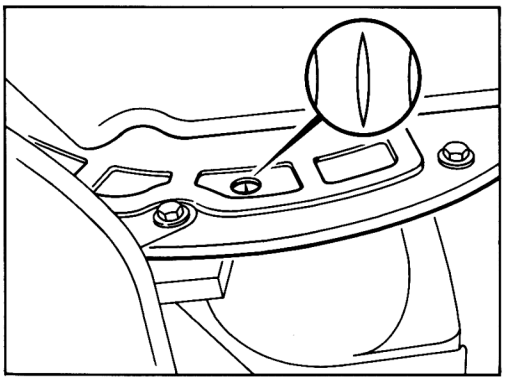

794 - 15

6. Check basic position of balance shaft drive sprockets. The marks on the sprockets must line up with the marks on the rear toothed belt cover.

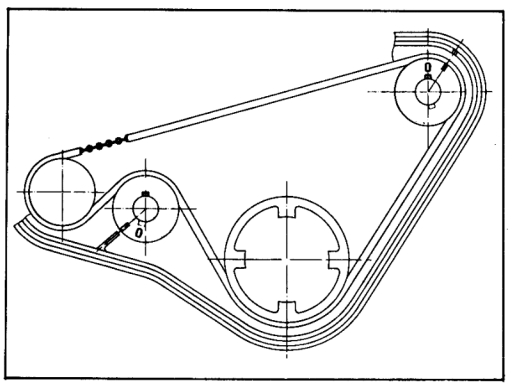

1044-13

Printed in Germany – IV, 1992

7. Prepare Special Tool 9201 for check. Pull out lock pin of Special Tool and push measuring pin opposite the lock pin all the way out. Align non-return pointer to measuring pointer.

8. Push Special Tool onto toothed belt. Push measuring button (arrows) slowly in until engagement of the lock pin is felt and read off displayed value on dial gauge.

Note

To avoid reading errors, the non-return pointer must always be aligned to the measuring pointer after the lock pin has engaged (turn counterclockwise).

Adjusting value:

(new and used belts)
2.7 ± 0.3 dial values
If required, correct toothed belt tension.

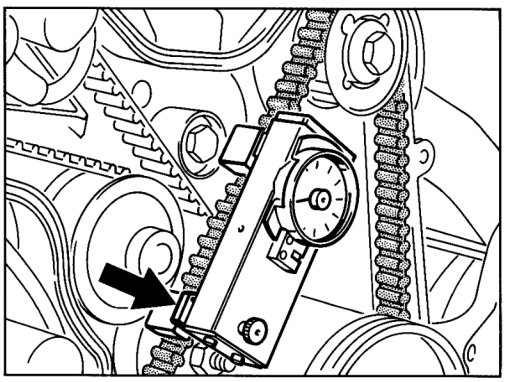

1049-13

Adjusting

9. The sliding blocks must rest on the belt along their entire surface. During the measuring process, the Special Tool must neither be twisted nor moved on the belt.

10. When tensioning, rotate tensioning pulley clockwise. When slackening, rotate tensioning pulley counterclockwise.
Tighten hexagon nut to 45 Nm (33 ftlb), using a second wrench to lock.

11. After the toothed belt has been adjusted, follow by adjusting the idler. Using Special Tool 9207 or a feeler gauge (0.5 mm), set idler pulley to a clearance of 0.5 mm to the toothed belt in bottom balance shaft area and preload upper toothed belt train by 0 to 1 mm at same time. Tighten idler pulley in this position. If the adjustment travel is not sufficient, turn idler pulley by 180° and repeat adjustment. Tighten hexagon head nut to 45 Nm (33 ftlb), using a second wrench to lock.

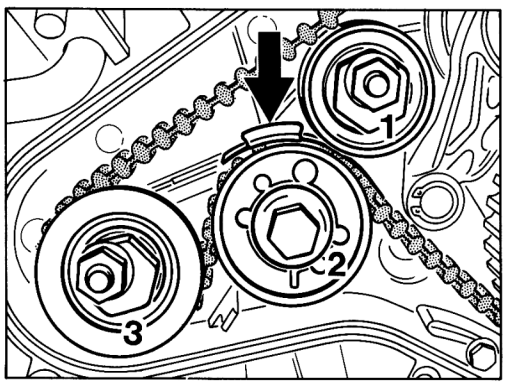

1050-13

1 - Idler pulley
2 - Balance shaft
3 - Tensioning pulley

Printed in Germany – IV, 1992

12. Fit toothed belt cover. Install Poly-Rib belt or power pump belt, respectively, and adjust according to specification. Fit belt or power pump belt, respectively, and adjust according to specification. Fit engine undertray and air assembly.

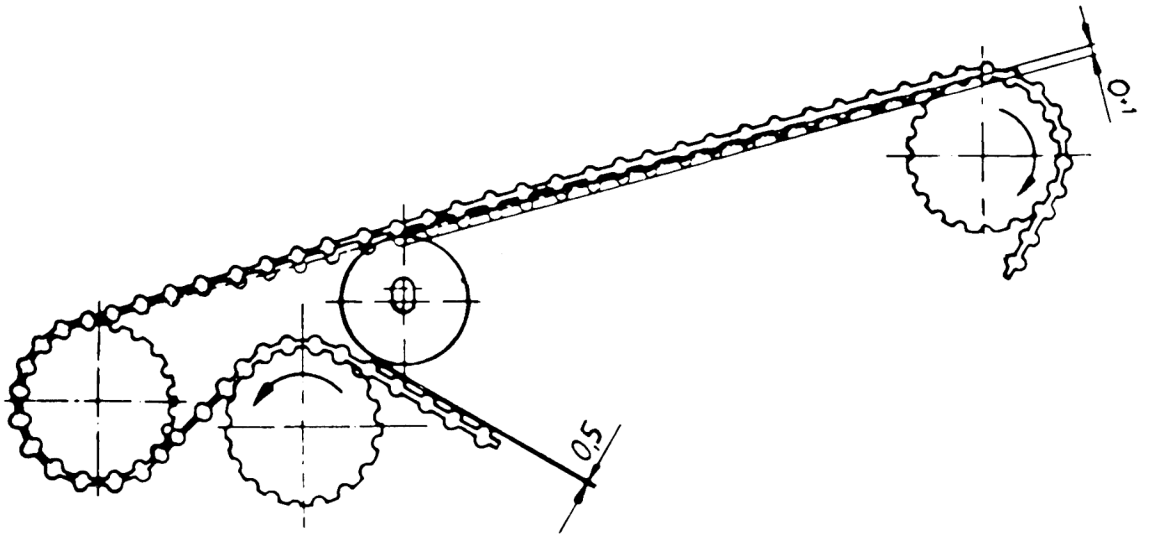

Printed in Germany – IV, 1992

Crankcase markings

Upper and lower crankcase section and balance shaft cover

1. The upper and lower crankcase sections as well as the balance shaft cover are machined as a unit and must always be fitted as a unit. Observe correct identification marking.

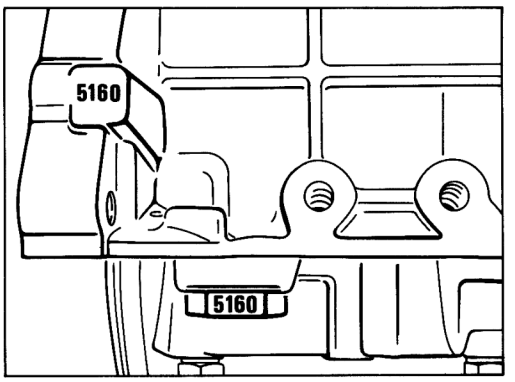

1052-13

2. When the components have been fitted, it must be possible to read off the markings of both balance shaft covers from above.

Engine number

The engine number is engraved on the right-hand rear end of the engine when seen in the direction of travel.

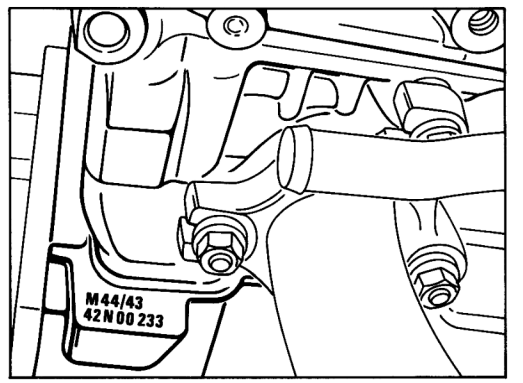

1051-13

Printed in Germany – IV, 1992

Locking the flywheel for assembly work

Tools

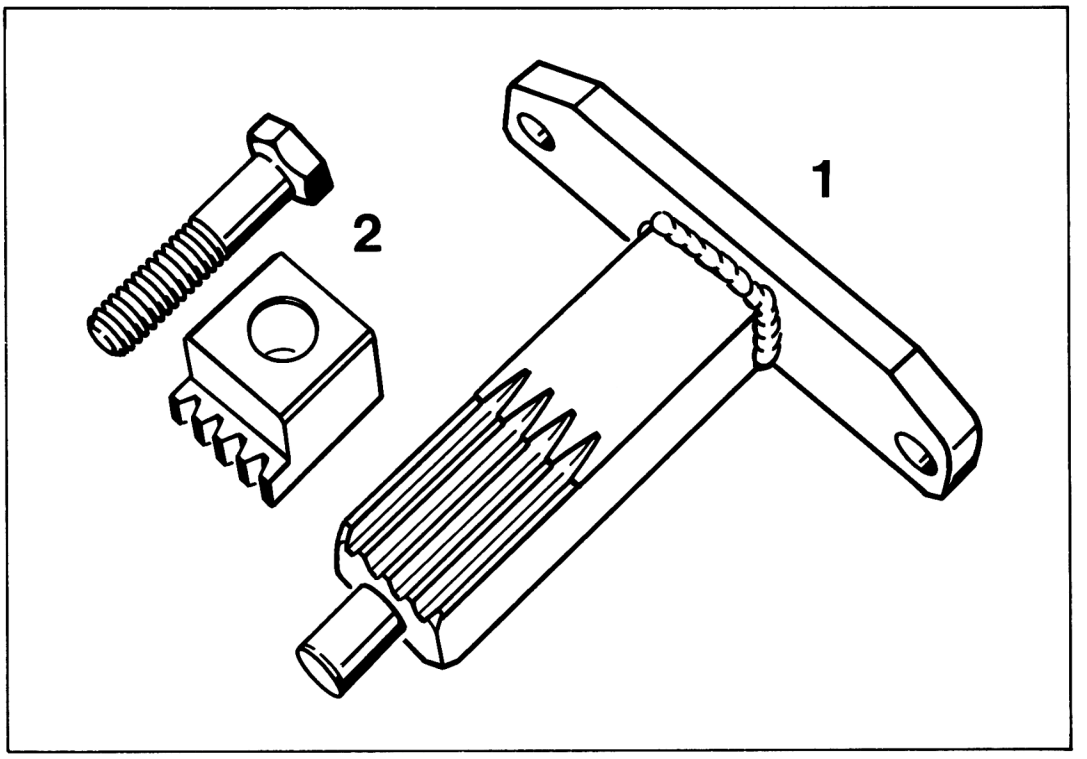

No.	Designation	Special tool	Order number	Explanation
1	Toothed segment	9206/1	000.721.920.61	Engine installed
2	Toothed segment with hex. head bolt M 12 x 1.5 x 60	9538/1	000.721.953.81	Engine removed

Printed in Germany – IV, 1992

Locking the flywheel for assembly work

(Engine with double-mass flywheel is installed)

1. Disconnect ground cable from battery. Remove starter.

2. Place Special Tool 9206/1 into position and lock.

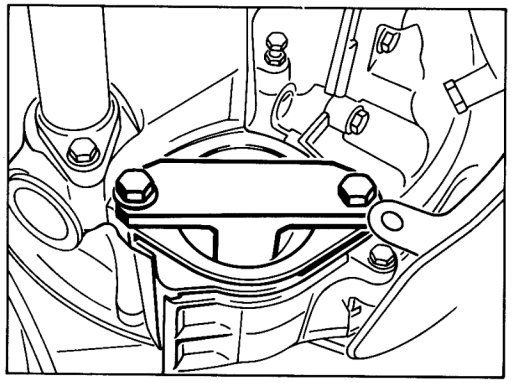

810-13

3. In case of Tiptronic transmissions, use old Special Tool 9206.

Engine removed

4. Fit hexagon head bolt with Special Tool 9538/1 to engine support adapter and lower engine mount.

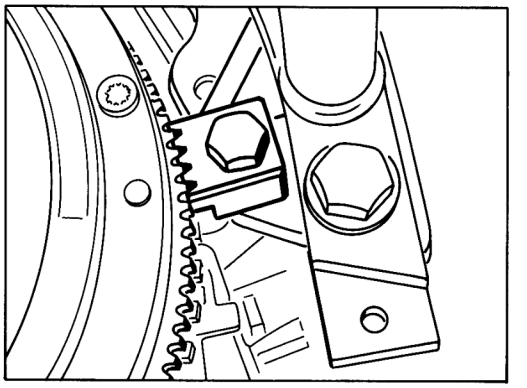

1054-13

Printed in Germany – IV, 1992

Engine support

Tools

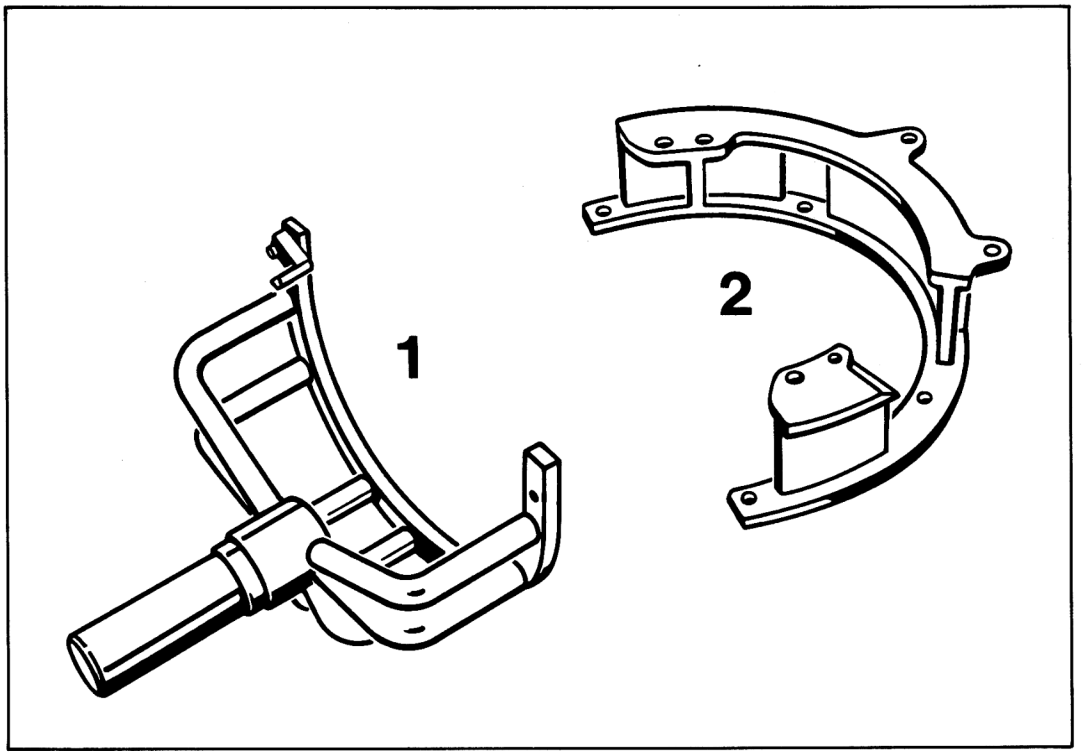

No.	Designation	Special tool	Order number	Explanation
1	Engine support	9127	000.721.912.70	
2	Engine support adapter	9197	000.721.919.70	

Printed in Germany – IV, 1992

Crankcase - Tools

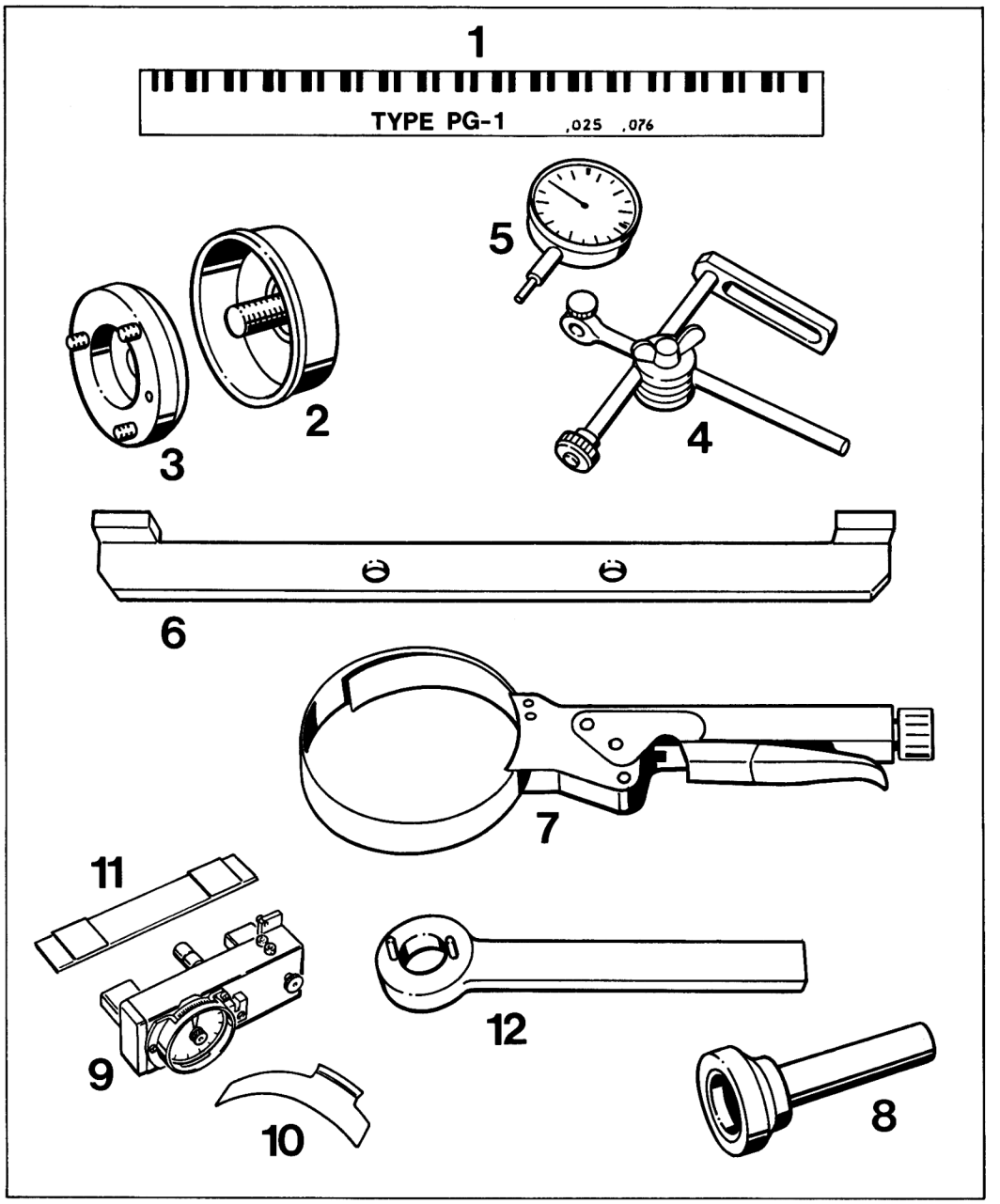

1803-13

No.	Designation	Special tool	Order number	Explanation
1	Plastigage for measuring the bearing clearances		V/161 - green V/162 - red V/163 - blue	Commercially available, e.g. Matra-Werke Dieselstrasse 30 - 40. Frankfurt/Main
2	Thrust piece for seal	9517	000.721.951.70	
3	Assembly tool	9517/1	000.721.951.71	
4	Dial gauge holder	VW 387	VW 387	
5	Dial gauge			Commercially available
6	Retaining bracket for locking the flywheel	9130	000.721.913.00	
7	Piston ring compressor			Commercially available, e.g. Hazet 794-U-3
8	Thrust piece	9202	000 721 920 20	
9	Belt tension tester	9201	000 721 920 10	
10	Adjusting gauge	9207	000 721 920 70	
11	Measuring gauge	9201/2	000 721 920 12	
12	Retaining wrench	9200	000 721 920 00	

Printed in Germany – XI, 1994

Machining cylinder bores in upper crankcase section

The upper crankcase section is an aluminium alloy product and contains minute particles of pure silicium.

In order to have an usable cylinder surface finish, the cylinder bores have to be machined in a manner that the silicium particles protrude out of the aluminium and therefore pistons and piston rings only have contact with the silicium.

If it is necessary to machine cylinder bores, they can be restored with a **SUNNEN CK-10 / CV - 616** cylinder repairing machine for installation of oversize pistons.

Standard size	100.00 mm
Oversize 1	100.50 mm

Single cylinder bores can be machined as required, since pertinent oversize pistons weigh the same as standard pistons.

Prior to machining cylinder bores it is recommended to check the stocks on hand for pertinent tolerance groups and, if necessary, to hone the bore for a certain piston size which is available. There could be problems in supplying pistons of certain tolerance groups depending on circumstances.

The following procedures are necessary:

Rough turning to 0.1 mm before finished size.
Dressing to 0.02 mm before finished size.
Polishing to finished size.
Lapping with Sunnen silicium mixture.

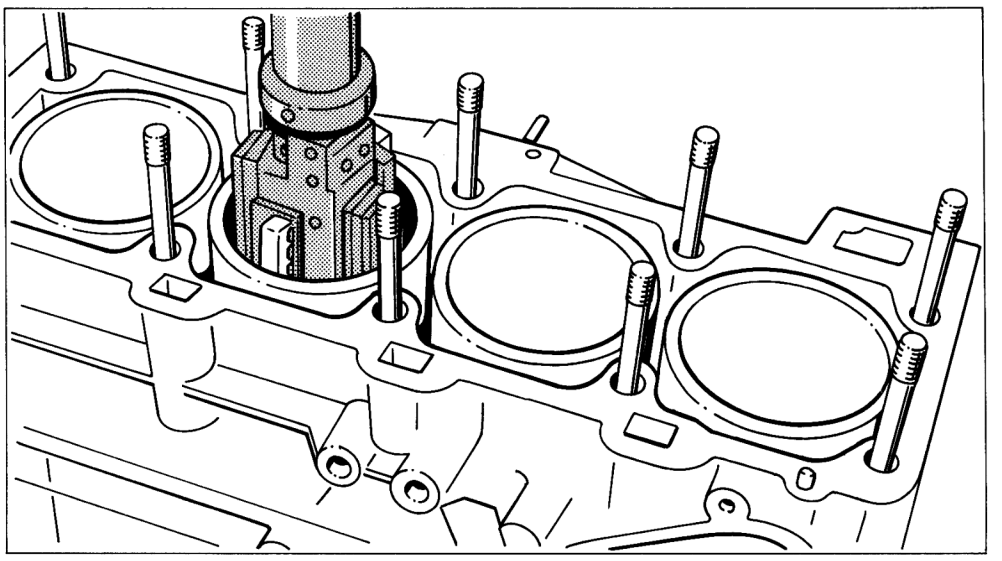

Printed in Germany – XI, 1994

Procedures

It is absolutely necessary to bolt the upper and lower crankcase sections together with help of the bearing studs prior to machining.

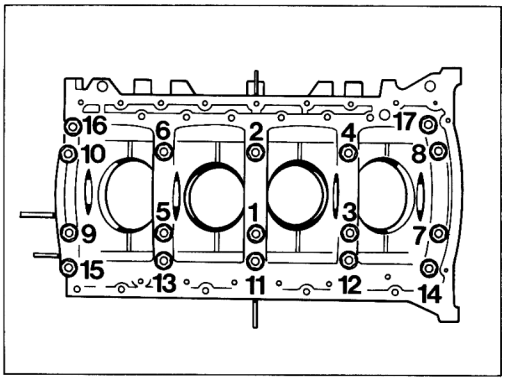

1817-13

Tightening sequence:

Nos. 1 to 10 in 2 steps:
Thread M 12 x 1.5

1st step	30 Nm (22 ftlb)
2nd step	60 deg. rotating angle

Nos. 11 to 17 in 2 steps
Thread M 10 x 1.5

1st step	20 Nm (15 ftlb)
2nd step	50 Nm (37 ftlb)

Tools

Machine	CK-10 with filter CV-616 with filter
Grinding attachement	CK-3000 or CK-2600
Grinding oil	MB-30
Felt inserts	C30-F 85 1 set
Silicium mixture	AN-30
Storage box for felt inserts	AN-35
Stone holder set for felt inserts instead of honing stones	CK-3035 A 1 set
Stone holder set for honing stones for 3 different stones (types)	CK-3035 A 3 set
Felt holder seat instead of guide shoe	CK-3130 A 1 set
Roughing stone set	C30-J 55 ++ shorten to 70 mm length
Dressing stone set	C30-J 84 ++ shorten to 70 mm length
Polishing stone set	C30-C 03 - 81

Printed in Germany – XI, 1994

Honing Procedures

Perform all honing and lapping jobs without the upper dressing guide shoe.

The protrusion of the bronze bar on main guide shoe no. 3 has to be eliminated; flush with guide shoe base.

Setting up machine

Roughing adjustment – table described in column 1.
Dressing adjustment – table described in column 2.
Polishing adjustment – table described in column 3.
Lapping - uncovering the silicium crystals.

1. Set up machine as described in column 4 of test sheet.

2. Thoroughly remove all abrasive residue form previous honing jobs with filtered honing oil.

3. Wipe cylinder bores dry and apply a thin coat of thoroughly mixed silicium mixture.

Note:

If the silicium mixture is too consistent, it can be diluted by adding fresh honing oil and mixing thoroughly.

4. Holders with felt inserts are now placed in th grinding attachment instead of guide shoe and honing stones.

Adjusting to the cylinder diameter is made with a gage as for the guide rails and honing stones.

5. Soak felt inserts in filtered honing oil and coat with silicium mixture.

6. Stop grining oil feed; cylinders are lapped without grinding oil!

Printed in Germany – XI, 1994

Machinging cylinders

Guide grinding attachment into bore. Turn feed wheel anticlockwise until felt inserts rest on walls. Start machine and keep turning handwheel anticlockwise until needle of load instument reaches approx. 20 to 30 %.

Now set scale of feed wheel to 20.

The machine stops on its own after about 80 seconds. The cylinder surface will now be dull and without gloss.

First coat felt inserts with new silicium mixture before going on the next cylinder.

Note:

If holder with felt inserts are not being used, they must be kept in the storage box to avoid contact with dirt.

Never reuse old silicium mixture.

Printed in Germany – XI, 1994

Machining Cylinder Bores with SUNNEN - 10/CV 616

	1. Roughing to Ø	2. Dressing to Ø	3. Polishing to Ø	4. Lapping
Cylinder dia. Standard 100.00 mm				
Cylinder dia. Oversize 1: 100.50 mm	100.40 mm	100.48 mm	100.50 mm	100.50 mm
Cylinder length 145 mm				
Honing head type	CK - 3000 or CK - 2600	dto.	dto.	dto.
Travel scale for stone length	70 mm	70 mm	70 mm	70 mm
Adjustment on scale	160 mm	160 mm	160 mm	125 mm
Speed (rpm)	125 CK/CV	125 CK/CV	125 CK/CV	125 CK/C4
Strokes per minute	49 CK/57 CV	49 CK/57 CV	49 CK/57 CV	73 CK/80 CV
Feed	4	3	3	3
Stone protrusion top	21 mm	21 mm	21 mm	2 mm
Roughing stone	C 30 - J 55			
Dressing stone		C 30 - J 84		
Polishing stone			C 30-C03-81	
Felt insert				C 30-F 85
Display %	30 - 40	30 - 40	20 - 30	20 - 30
Material removed	0.07 mm	0.03 mm	0.01 mm	aprox. 20 lines
Adjustment on feed wheel	10 lines	10 lines	10 lines	80 sek. runn. t.
Surface finish (Rt.)	approx. 7 - 8 my	approx. 2my	approx. 0,6-0,8 my	approx. 1-2 my

Printed in Germany – XI, 1994

A chamfer of 0.5 mm x 30° has to be machined on the upper cylinder wall of machined cylinder bores after finishing the honing procedures.

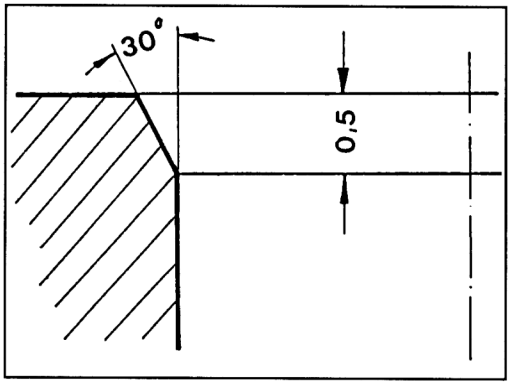

1818-13

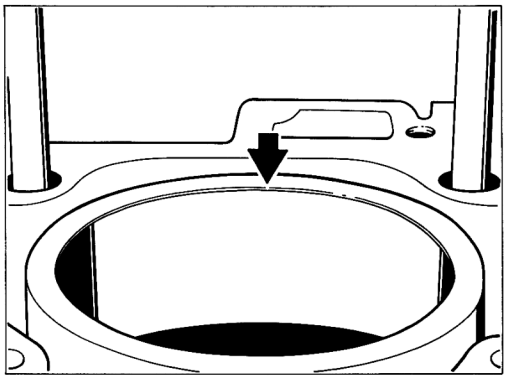

1819-13

Clean upper and lower crankcase sections thoroughly to remove abrasion residue and silicium paste prior to assembling.

Printed in Germany – XI, 1994

Crankcase - Installation length or protrusion length of studs

Caution: Unless indicated otherwise, lock all studs with Loctite 270 when reassembling the engine!

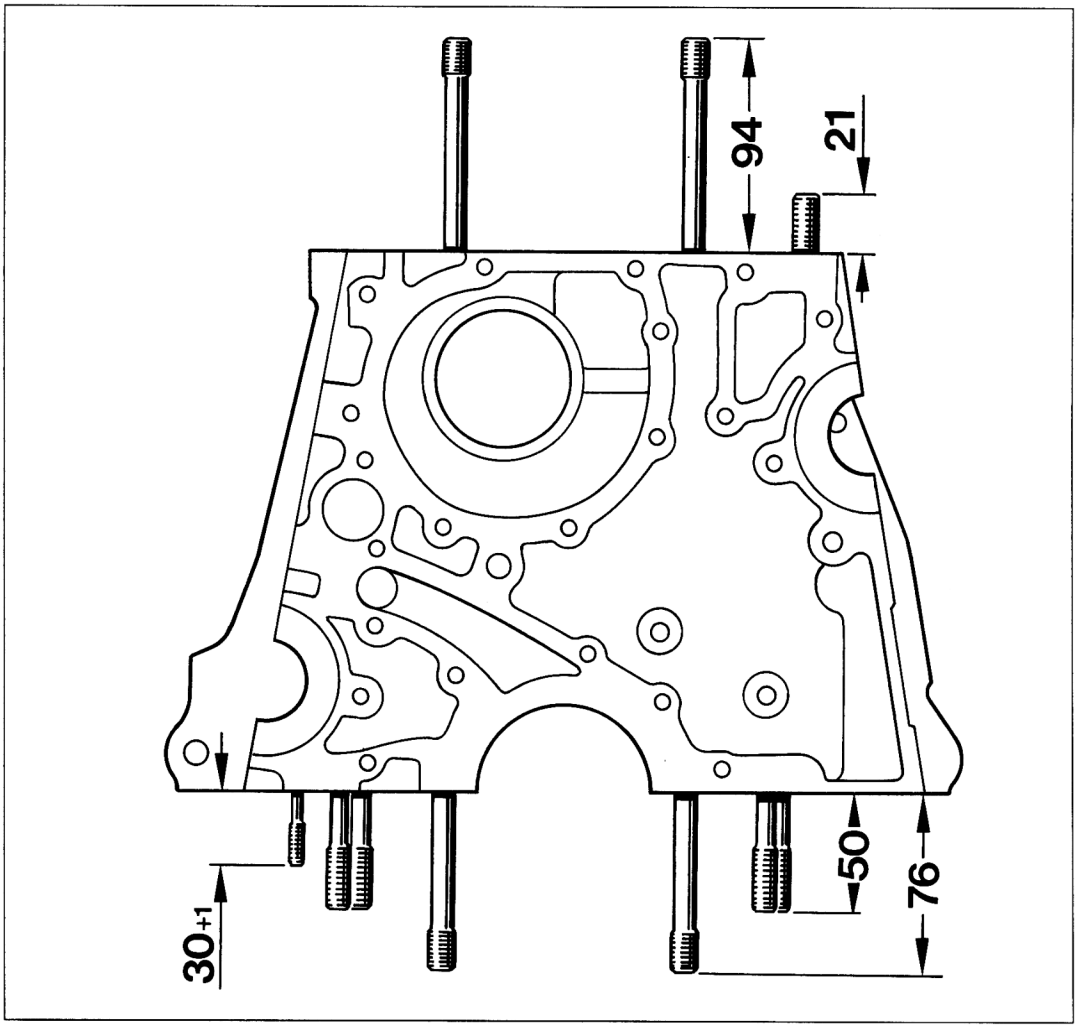

1799-13

Printed in Germany – XI, 1994

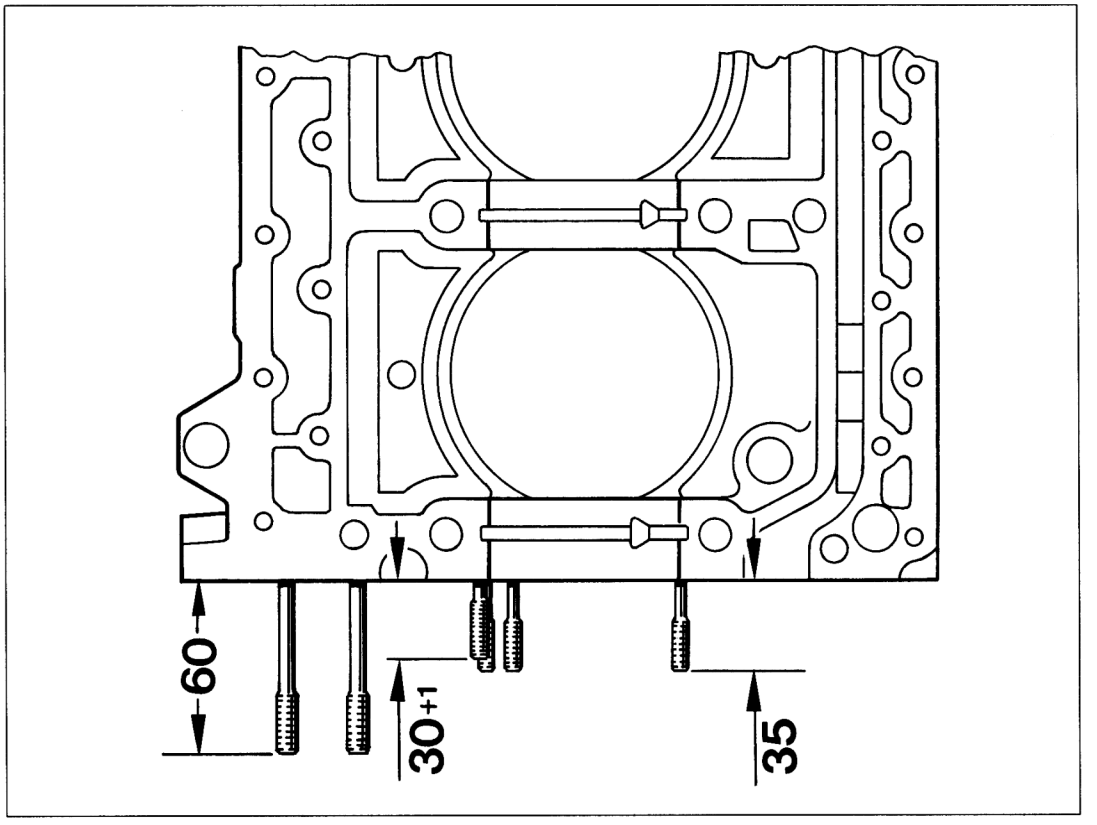

1800-13

Studs - oil pump area

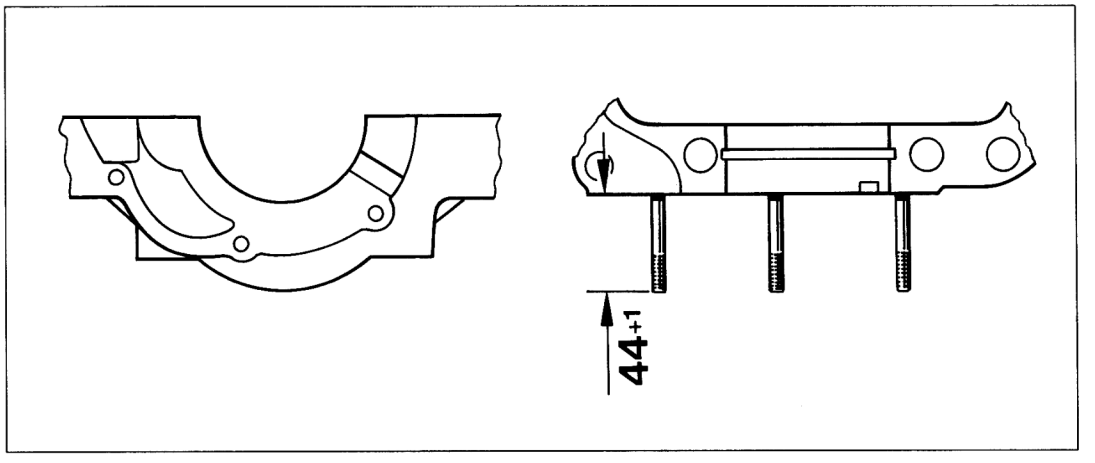

1823 - 13

Printed in Germany – XI, 1994

Dismantling and assembling crankcase, crankshaft

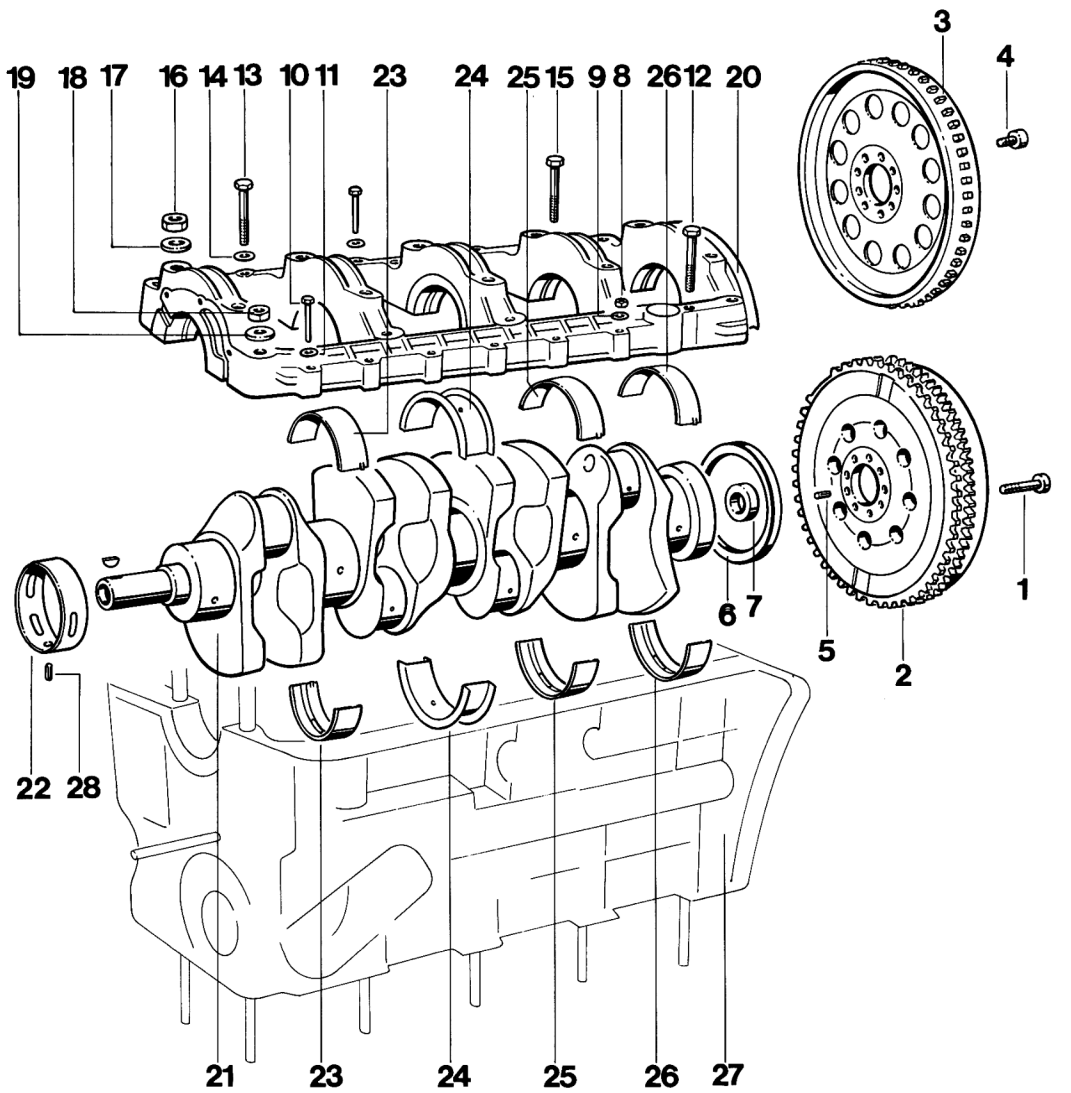

1227-13

Printed in Germany – V, 1992

No.	Designation	Qty.	Note: Removal	Note: Installation
1	Pan head screw M 10 x 1.25 x 62	9		Tightening torque 90 Nm (66 ftlb)
2	Double-mass flywheel	1		
3	Tiptronic flywheel	1		
4	Pan head screw M 10 x 1.25 x 20	9		Tightening torque 90 Nm (66 ftlb)
5	Roll pin 6 x 16	1		
6	Shaft seal	1		Replace, apply a thin coat of oil to sealing lip
7	Deep-groove ball bearing	1		
8	Hexagon head nut	1		
9	Washer A 6.4	1		
10	Hexagon head bolt M 6 x 35	5		
11	Washer A 6.4	5		
12	Hexagon head bolt M 8 x 55 Oil suction pipe mounting	1		
13	Hexagon head bolt M 8 x 55	6		
14	Washer	6		
15	Hexagon head bolt M 8 x 55	1		
16	Hexagon head nut M 10	7		
17	Washer	7		Rounded side faces up
18	Hexagon head nut M 12 x 1.5	10		Lettering faces up
19	Washer	10		Rounded side faces up
20	Lower crankcase section	1		Clean and degrease sealing surface, apply Loctite 574 to seal

Printed in Germany – V, 1992

No.	Designation	Qty.	Note: Removal	Installation
21	Crankshaft	1		Check end clearance and radial play
22	Closed main-bearing bushing, bearing No. 1	1		Make sure the bearing engages in the roll pin
23	Main bearing No. 2	1		Place bearing insert **without** lubrication groove into lower crankcase section
24	Thrust bearing No. 3 (pilot bearing)	1		Place bearing insert **without** lubrication groove into lower crankcase section
25	Main bearing No. 4	1		Place bearing insert **without** lubrication groove into lower crankcase section
26	Main bearing No. 5	1		Place bearing insert **without** lubrication groove into lower crankcase section
27	Lower crankcase section	1		Clean and degrease sealing surface in oil suction passage and flywheel areas
28	Roll pin 4 x 8	1		Check for correct seating

Printed in Germany – V, 1992

Dismantling and assembling crankcase and crankshaft

Main bearing no. 1

The closed main bearing sleeve for bearing no. 1 has a lubricating groove around one half.

Main bearings no. 2, 4 and 5

When installing it is important, that bearing shells **with** lubricating grooves are placed in the upper crankcase section and bearing shells **without** lubricating grooves in the lower crankcase section.

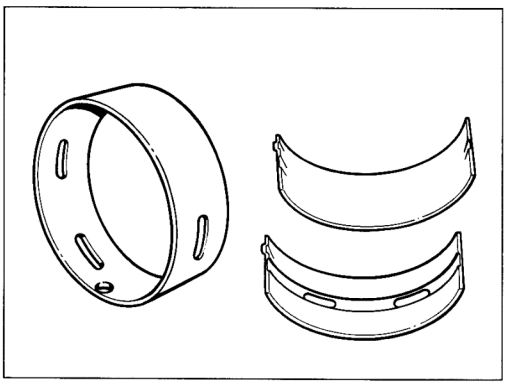

1231-13

Tightening sequence - tightening torque

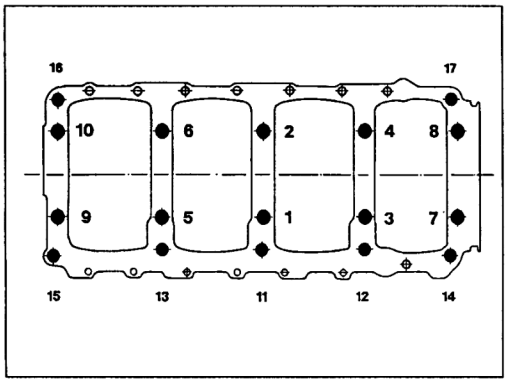

1359-13

Tightening sequence:

Nos. 1 to 10 in 2 steps:
Thread M 12 x 1.5

1st step	30 Nm (22 ftlb.)
2nd step	60 deg. rotating angle

Nos. 11 to 17 in 2 steps:
Thread M 10

1st step	20 Nm (15 ftlb.)
2nd step	50 Nm (37 ftlb)

Printed in Germany – VIII, 1993

Checking crankshaft bearing clearance

The „Plastigage" method is a simple way of checking bearing clearance.

Plastigage is available in three different sizes for measuring ranges from 0.025 to 0.230 mm.

Type	Color	Measuring Range
PG-1	green	0.025 to 0.075 mm
PR-1	red	0.05 to 0.15 mm
PB-1	blue	0.10 to 0.23 mm

Checking radial clearance

1. Remove crankcase lower section.

2. Remove oil from bearing shell and bearing journal.

3. Place Plastigage having width of bearing on crankshaft journal in axial direction. Install crankcase lower section carefully and tighten to specified torque.

Note

Do not turn crankshaft while measuring.

4. Remove crankcase lower section. Read width of flattened Plastigage from measuring scale. Corresponding value on measuring scale equals the bearing clearance.

Play of new bearings: 0.020 to 0.098 mm
Wear limit: 0.16 mm

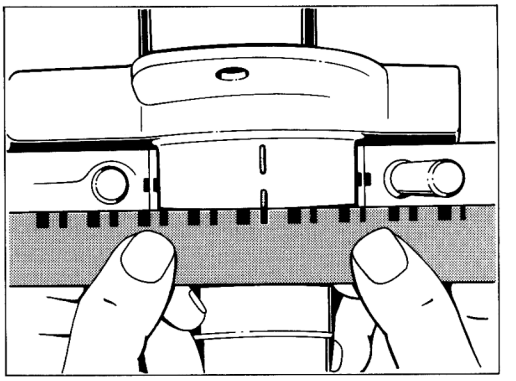

1801-13

Checking axial clearance

Use special tool VW 387 to check axial clearance.

Play of new bearings: 0.110 to 0.312 mm
Wear limit: 0.40 mm

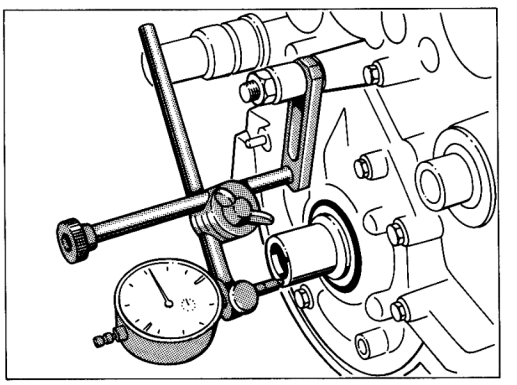

1802-13

Printed in Germany – IV, 1992

Aligning the upper and lower parts of the crankcase

Note

When assembling, make sure that there is no offset between the crankcase halves on the facing surface (on the oil pump side).

1. Using a plastic hammer, align the slightly tightened lower part of the crankcase (tightening torque 10 - 20 Nm / 7 - 15 ftlb.) with the upper part of the crankcase. Carry out the finger-nail test at the joint.

2. Tighten the crankcase with the specified tightening torque (3 stages).

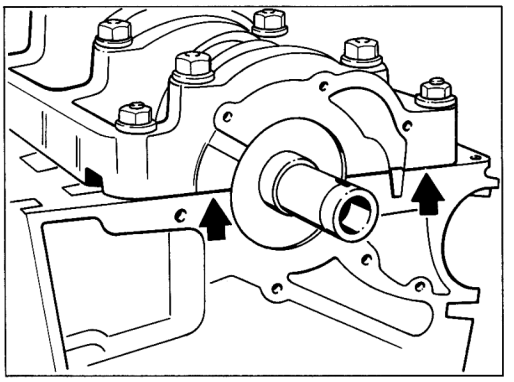

1235-13

3. Smooth any slight remaining offset at the joint with oil stone.

Printed in Germany – V, 1992

Crankshaft – Standard and Repair Dimensions

Size	Crankshaft bearing journal d 1 Ø	Crankshaft conrod bearing journal d 2 Ø	Thrust bearing 3 width
Standard	69.971...69.990	51.971...51.990	30.00 - 30.052*
- 0.25	69.721...69.740	51.721...51.740	
- 0.50	69.471...69.490	51.471...51.490	

	Crankcase bore Ø
	Standard 75.000...75.019
	Oversize 72.250...75.269

* Thrust bearing 3
Reconditioned size 30.200...30.239

Note

It is recommended to check the availability of bearing sizes prior to machining the crankshaft.

Printed in Germany – V, 1992

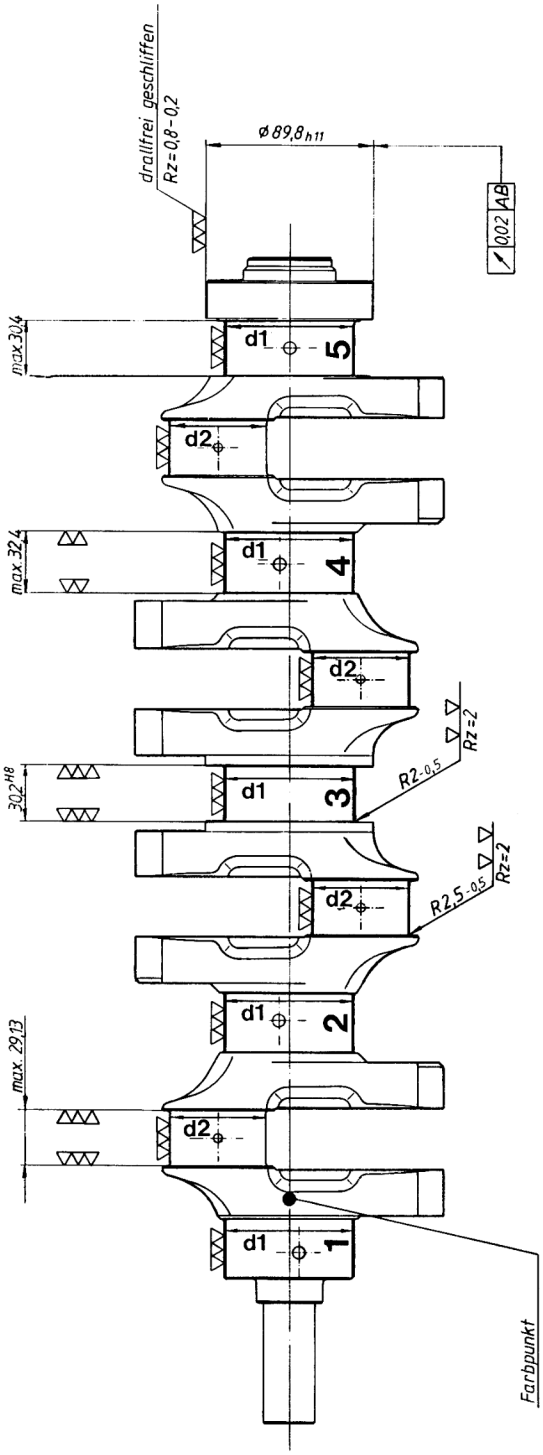

Grind bearing surface for oil seals to dimension 89.8 only if score marks are too deep. In other cases, repolish if required R_t = 0.8...2.

Oil bores are rounded to R 0.5 after grinding.

Remove sharp edges with R = 0.2...0.5.

Max permissible radial runout relative to support in — – — – — max. 0.04.

Color coding or repair stages:

1st repair stage	blue color dot
2nd repair stage	green color dot

Dismantling and assembling pistons, connecting rod

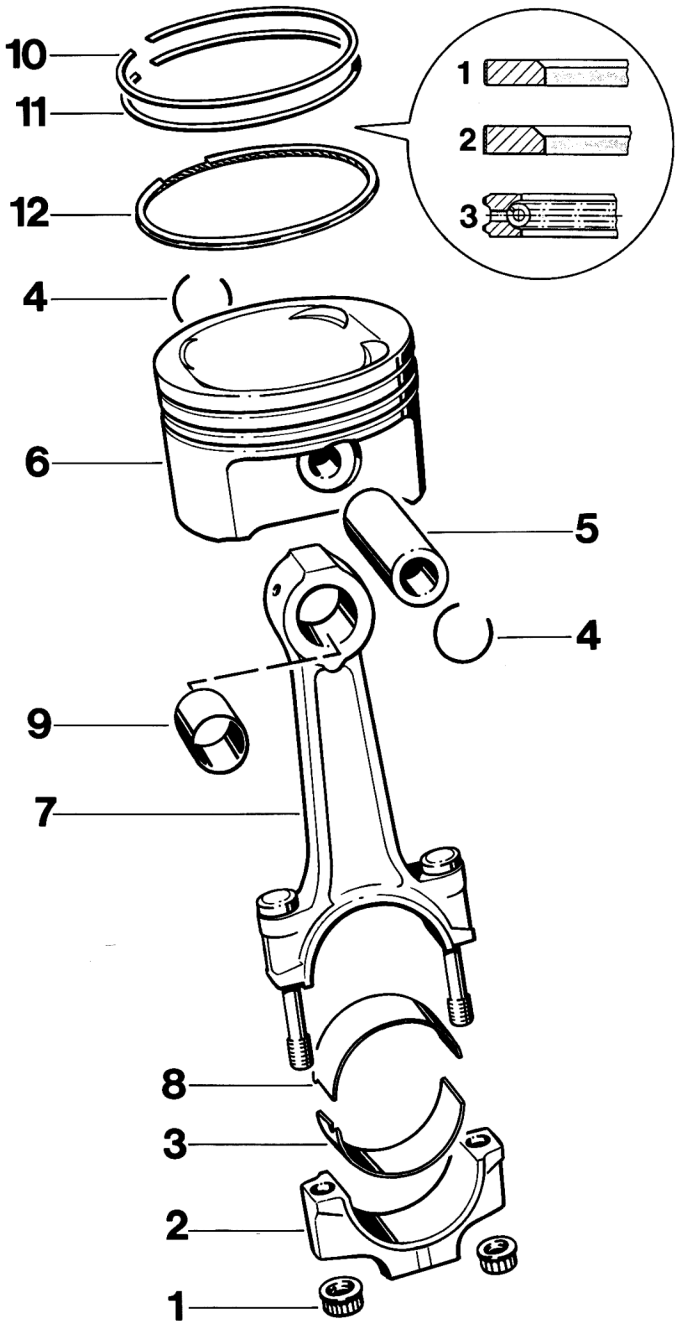

1228-13

Printed in Germany – V, 1992

No.	Designation	Qty.	Note: Removal	Installation
1	Connecting rod nut	8		Replace. Tightening torque: 1st stage: 25 Nm (18 ftlb) 2nd stage: 1 x 90° tightening angle Threads and mating surface must be oiled lightly
2	Connecting rod cap	4		Observe correct matching numbers
3	Lower big end bearing insert	4		Always replace used bearing inserts
4	Snap ring	8	Lever out, making sure snap ring does not spring away, e.g. by covering with a rag	Observe correct seating
5	Piston pin	4		
6	Piston	4	Mark installation position	Oil lightly. Observe installation position and tolerance groups
7	Connecting rod with connecting rod bolts	4		Observe matching number, identification S 3 engraved on side
8	Upper big end bearing insert	4		Always replace used bearing inserts
9	Small end bushing	4		
10	Piston ring, 1st groove Plain compression ring with internal chamfer, 0.4 wide, 45°	4		Lettering faces up
11	Piston ring, 2nd groove Taper faced ring with internal chamfer 0.8 wide, 45°	4		Lettering faces up
12	Piston ring, 3rd groove Narrow-land spring-loaded oil ring with tubular spring	4		Lettering faces up

Printed in Germany – V, 1992

Assembly notes

Reinforced connecting rods

Adopted for production from Oct. 1, 1993, as of the following engine numbers:

42 R 00 598 (engine type M 44/43)
42 R 50 621 (engine type M 44/44)

Identification mark:

Reinforced transition area from stem to bolt head seating surface

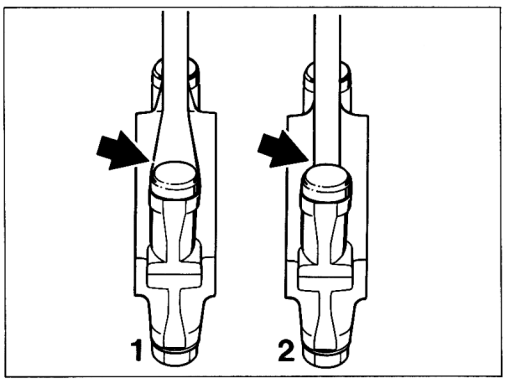

1 = New 2 = Former version

If at least one of the connecting bolt unions is undone during an engine rebuild, the new reinforced connecting rods must always be fitted throughout (if the engine was equipped with the former connection rod version).

These connecting rods are retroactively applicable for spare purposes for all models as of Model Year 1992 (N).

Connecting rod installation position

The matching numbers must be fitted so that they face each other and remain legible.

The matching numbers of the four connecting rods must be located in one line, i.e. all matching numbers must be located on the same side.

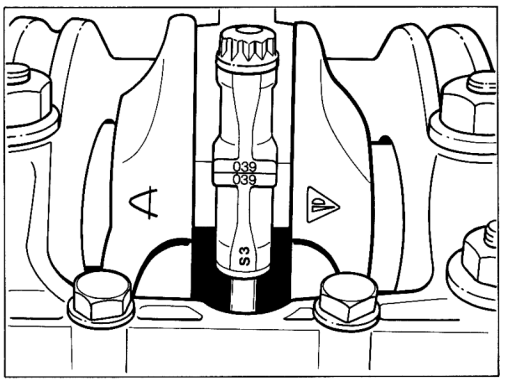

Printed in Germany – XI, 1994

Piston installation position

The arrow (rubber stamp) points towards the pulley. If the arrow is no longer visible, make sure the tolerance group mark also points towards the pulley.

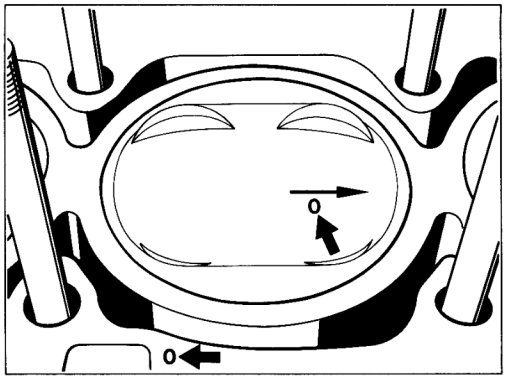

1232-13

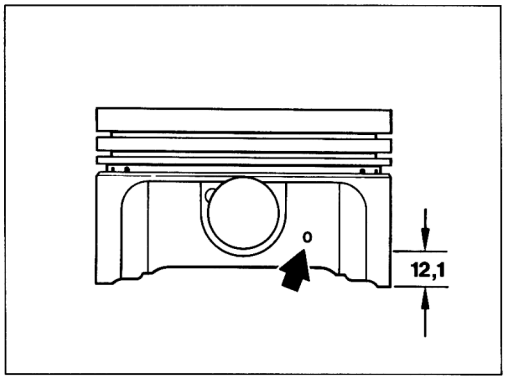

1230-138

Printed in Germany – XI, 1994

Checking piston and cylinder bore

Engine type M 44.43/44

Repair size	Piston Ø (mm) Kolben Schmidt AG		Cylinder bore (mm)		Tolerance groups Code
Standard	103.980	± 0.007	104.000	± 0.005	0
	103.990		104.010		1
	104.000		104.020		2
Oversize 1	104.480	± 0.007	104.500	± 0.005	10
	104.490		104.510		1 1
	104.500		104.520		12

Checking pistons

Measure at a distance of 12.1 mm from the bottom of the piston skirt, offset from the piston pin axis by 90°.

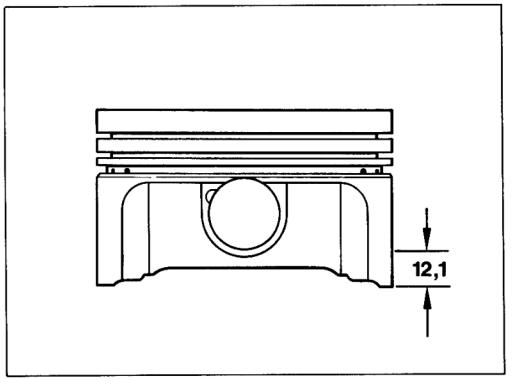

1230-13A

Checking cylinder bore

Measure approx. 61 mm from top edge of cylinder bore, across the cylinder block.
For measurement, mount lower crankcase section and tighten with prescribed tightening torque.

Note

It is recommended that the stocks of the relevant piston tolerance group are checked before machining the cylinders. If necessary, hone to the piston size available.
In some cases, certain tolerance groups may be in short supply.

Printed in Germany – V, 1992

Dismantling and assembling balance shaft drive

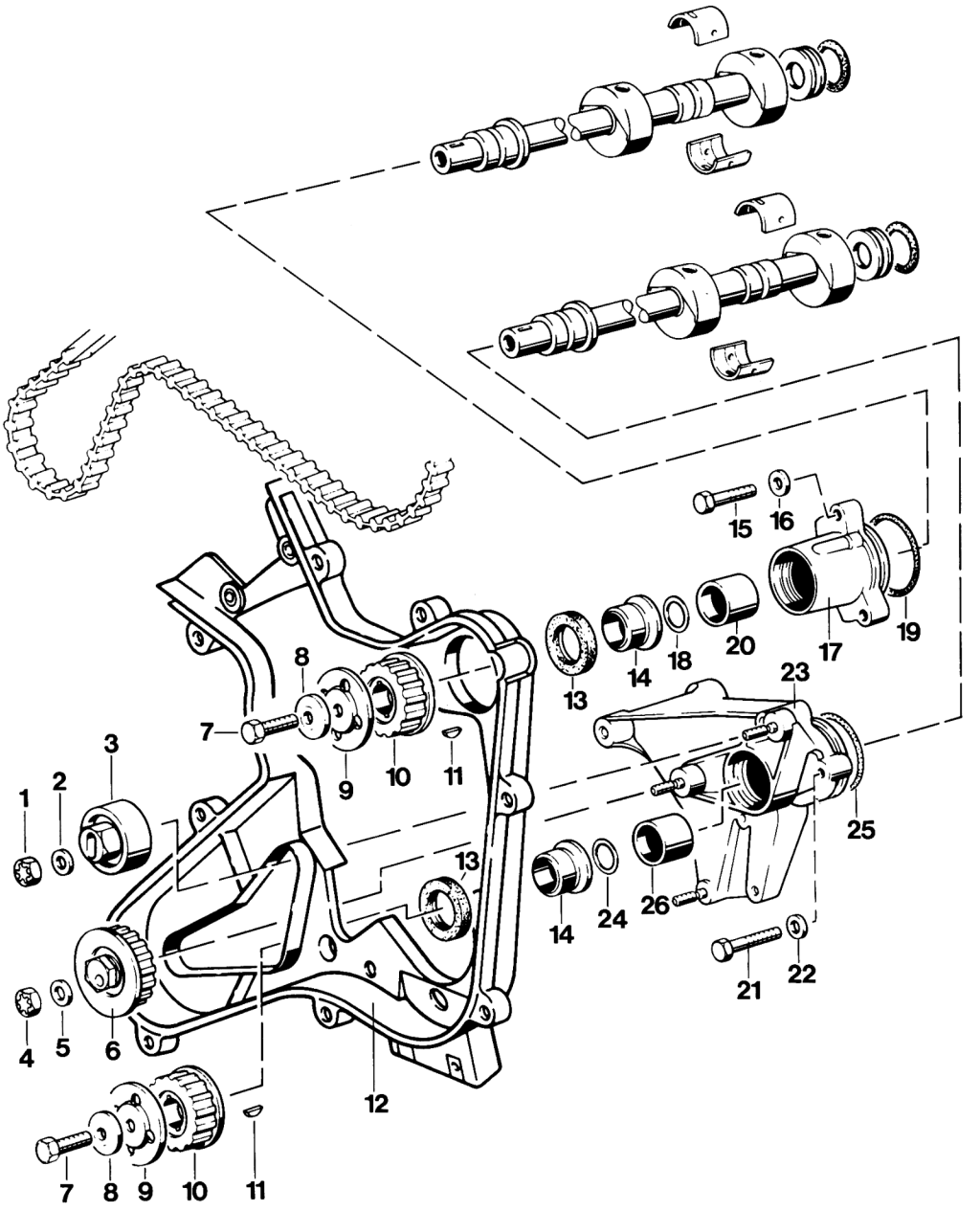

Printed in Germany – VII, 1992

Nr.	Benennung	Stück	Beachte: Ausbau	Einbau
1	Lock nut	1		Check, replace if required
2	Washer A 10.5	1		
3	Pulley	1		Check
4	Lock nut	1		Check, replace if required
5	Washer A 10.5	1		
6	Tensioning pulley	1		Check
7	Hexagon head bolt M 10 x 35	2		Coat threads with **Loctite 574. Tightening torque 45 Nm (33 ftlb).** Use **retaining wrench 9200** to lock.
8	Washer	2		
9	Flange washer	2		**Upper balance shaft:** Install in correct position. Locating tab engages into drive gear groove that is not marked. "0" mark is visible in large opening of flange washer. **Lower balance shaft:** Install in correct position. Locating tab engages into "0" drive gear groove. The "0" mark is visible in the rectangular cutout of the flange washer.
10	Drive gear for balance shaft	2		Check smoothness of balance shaft seating face, machine if required. Apply a thin coat of Optimoly HT to seating face.
11	Woodruff key	2		
12	Cover	1		

Printed in Germany – VII, 1992

Nr.	Benennung	Stück	Beachte: Ausbau	Einbau
13	Shaft seal	2		Replace, apply oil to sealing lip. Seal for **upper** balance shaft: 30 x 47 x 7 Seal for **lower** balance shaft: 30 x 48 x 7
14	Spacer sleeve	2		
15	Hexagon head bolt M 8 x 35	1		
16	Washer A 8.4	1		
17	Upper bearing housing	1		
18	Gasket	1		Replace
19	O-ring 56.7 x 3.53	1		Replace, oil lightly. Do not twist ring when fitting.
20	Bearing sleeve	1		
21	Hexagon head bolt M 8 x 60	1		
22	Washer A 8.4	1		
23	Lower bearing housing	1		
24	Gasket	1		Replace
25	O-ring 56.7 x 3.53	1		Replace, oil lightly. Do not twist ring when fitting.
26	Bearing sleeve	1		

Printed in Germany – VII, 1992

Removing and installing double-mass flywheel and grooved ball bearing

Removal

1. Fit double-mass flywheel to engine support adapter using Special Tool 9538/1.

2. Unbolt clutch pressure plate evenly and take off pressure plate complete with drive plate.

3. Undo cylinder bolt (multi-tooth bolt) from double-mass flywheel and lift off. Caution! Take care not to damage the reference mark sender.

Installation

Tighten cylinder bolts in two steps.

1st step	40 Nm (30 ftlb.)
2nd step	90 Nm (66 ftlb.)

Removing and installing grooved ball bearing

Removal

Pull out grooved ball bearing with internal puller, e.g. Kukko 21/2 (14.5 to 18.5 mm).

Installation

Push in with Special Tool VW 295 A until it is seated against the stop.

Printed in Germany – VIII, 1993

Replacing the camshaft toothed belt (with hydraulic belt tensioner)

Removal

1. Turn engine in direction of rotation and set cylinder 1 to firing TDC. Refer to Figs. on page 15 - 4.

2. Remove engine undertray. Slacken and take off Poly-Rib belt for air conditioning compressor / alternator and belt for power pump.

3. Loosen crankshaft bolts, remove toothed belt cover, guide rail (balance shaft toothed belt) as well as toothed belt.

4. Take guide rail off coolant pump housing and toothed belt tensioner off support. The toothed belt tensioner may be taken off in forward direction without having to lock the parts.

5. Remove tensioner lever and take off toothed belt.

Pre-tensioning the hydraulic toothed belt tensioner

6. After removal, the hydraulic toothed belt tensioner must be pre-tensioned in a vise. Fit aluminum jaws into vise. Insert the crankshaft bolt washer (part no. 944.102.210.02) at the lower section of the tensioner housing to protect the tensioner bottom.

Note

Do not apply pressure to inner surface of the tensioner housing. Press only on outer edge of the tensioner housing.

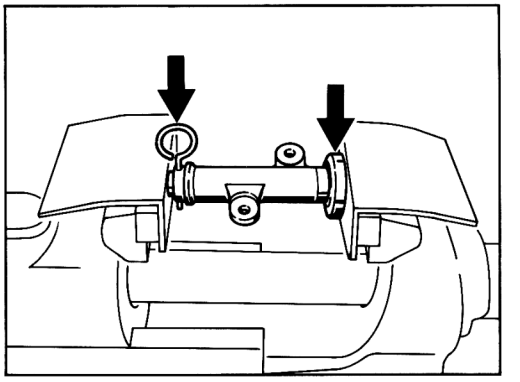

790-15

7. Tighten vise slowly until resistance is felt. Wait for a couple of seconds and then tighten somewhat more.

8. Continue to tighten in this order until the push rod /housing bores are flush with each other and the push rod may be locked with Special Tool 9530 (upper Fig.).

Note

Never continue to rotate engine if the toothed camshaft belt is not fitted or has not been tightened since this may lead to valve damage.

Printed in Germany – II, 1991

Installation

9. When refitting the toothed belt, observe the following sequence:
- Crankshaft drive pinion
- Install and lock tensioning lever (Preload the lock ring, replace if required)
- Camshaft drive pinion
- Coolant pump recirculation gear
- Tensioning pulley

10. Install hydraulic toothed belt tensioner and rotate Special Tool 9530 to pull tool out. Rotate crankshaft by two turns and check TDC marks on flywheel and camshaft drive pinion, respectively.

Printed in Germany – II, 1991

Adjusting and checking the camshaft setting

Tools

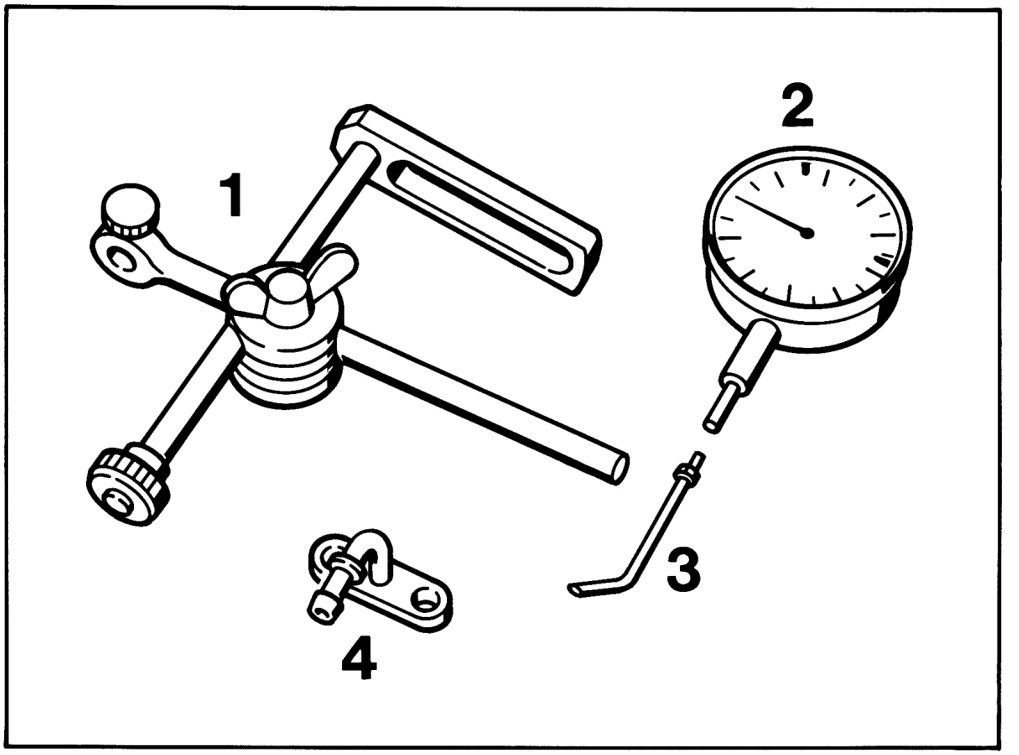

No.	Designation	Special tool	Order number	Explanation
1	Dial gauge support	VW 387	VW 387	
2	Dial gauges			commercial items
3	Dial gauge insert for push-rod stroke measurements	9232	000.721.923.20	
4	Flange	9529	000.721.952.90	
	Dial gauge insert for push-rod stroke measurements			shop-made (approx. 205 mm long)

Printed in Germany – II, 1991

Checking and adjusting the camshaft setting

Engine Type M 44.43/44

Check requirements: Belt tension o.k.

Visual check of TDC marks

1. Turn engine in sense of rotation until cylinder no. 1 is at firing TDC

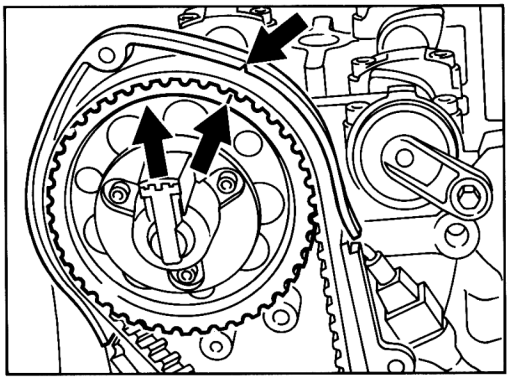

792-15

TDC mark on flywheel (center notch) with engine fitted (double-mass flywheel).

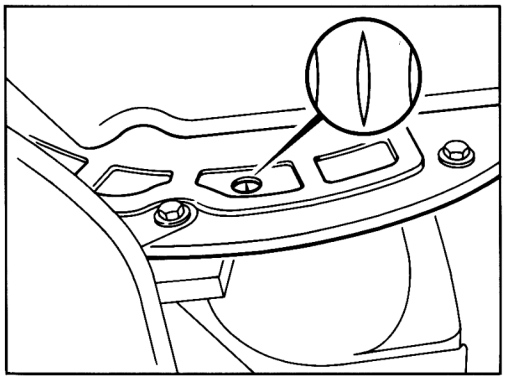

794-15

Note

Distributor rotor points up.

Camshaft position with cyl. 1 at firing TDC.

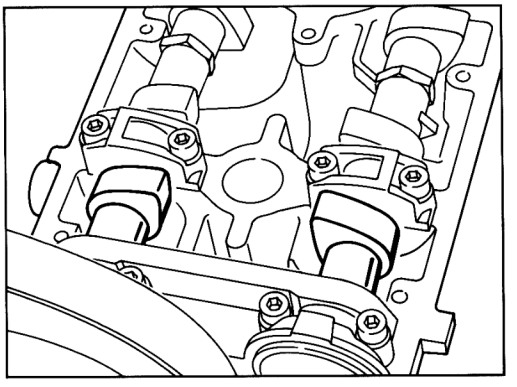

793-15

With the engine removed, transfer TDC flywheel mark with a color pen to the sensor ring gear.

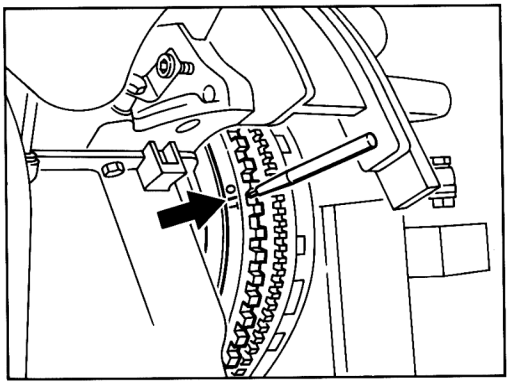

795-15

Set TDC flywheel mark opposite crankcase mark.

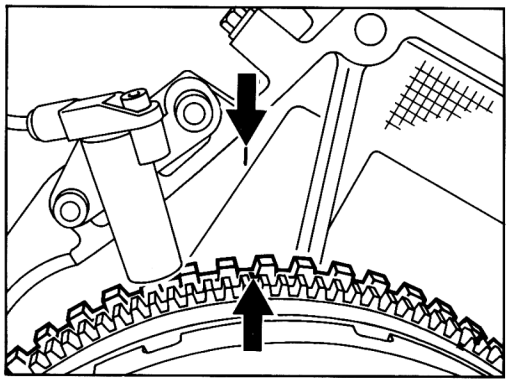

Adjusting with dial gauges

2. Align dial gauge with shop-made extension (length 205 mm) to piston pin (cyl. 1). Preload 3 mm.
   Align second dial gauge to hydraulic tappet of cyl. 1 inlet valve. The dial gauge must be set up perpendicular to the inlet valve. Preload: 3 mm.

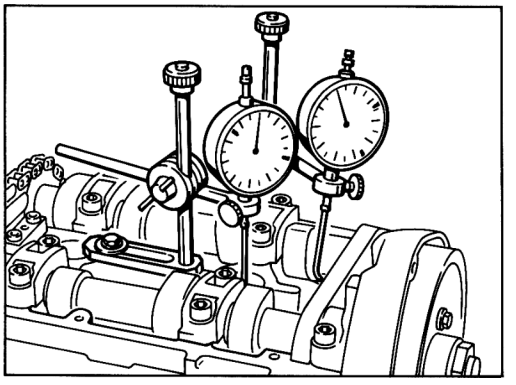

3. Remove distributor rotor and fit camshaft gear with 3 auxiliary bolts (M 5 x 15) to prevent the camshaft gear and the camshaft, respectively, from turning when the central camshaft bolt is undone.

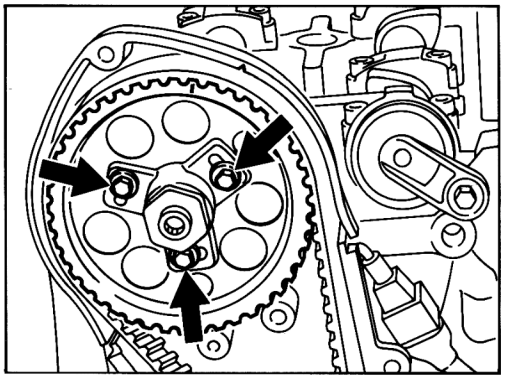

4. Undo central camshaft bolt, using a suitable retainer to keep the camshaft from turning. Rotate engine against the sense of rotation until the camshaft gear is against the stop within the woodruff key groove.

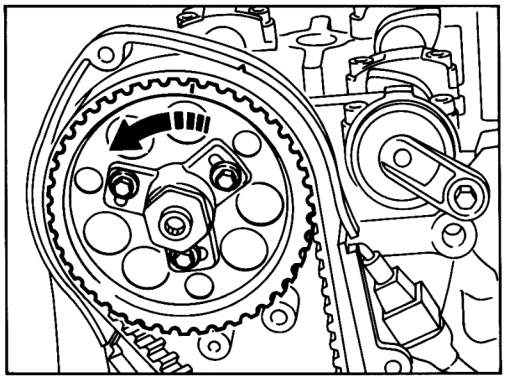

5. Tighten auxiliary bolts to 6 Nm (4 ftlb) and central bolt to approx. 40 Nm (29 ftlb).

Printed in Germany – II, 1991

6. Remove oil line from camshaft adjuster. Connect flange (Special Tool 9529) to camshaft adjuster and pressurize (pressure flow approx. 3.0 bar). A consistent supply of compressed air is required since air can escape across a vent hole.

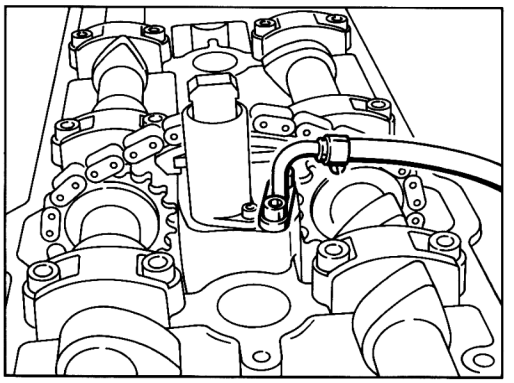

799-15

7. Turn engine in sense of rotation until maximum piston stroke is reached.

8. Set dial gauge of hydraulic tappet of cyl. 1 inlet valve to zero.

9. The crankshaft is now rotated from the firing TDC (cyl. 1). Observe dial gauge of cyl. 1 inlet valve at the same time.
Rotate until a stroke of **0.39 ± 0.03 mm** is reached.

Note

Do not rotate crankshaft against the sense of rotation.

10. Undo central bolt and auxiliary bolts, making sure the setting of **0.39 ± 0.03 mm** on the dial gauge does not change.

11. Continue to rotate the crankshaft slowly until maximum piston stroke on the dial gauge is reached. This crankshaft position corresponds to the cyl. 4 firing TDC setting of the camshafts.

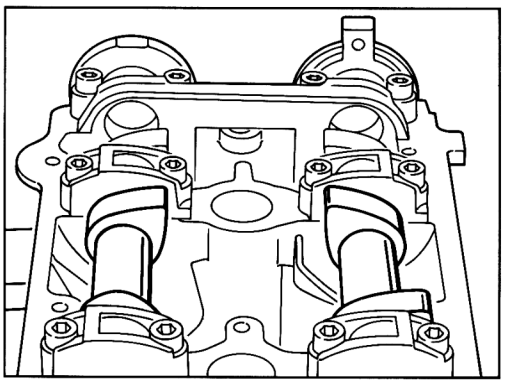

800-15

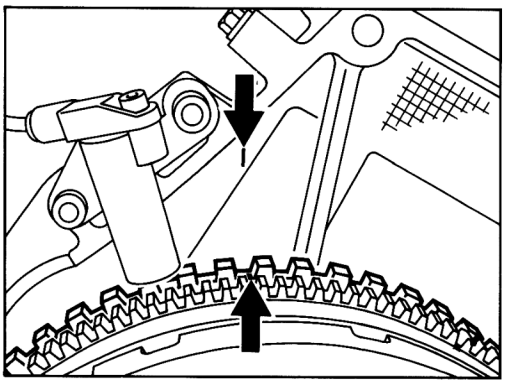

796-15

12. Tighten auxiliary bolts and central bolt. Tightening torque of central bolt: 65 (48) to 70 Nm (52 ftlb).

13. To verify the setting, rotate crankshaft by two more turns and check setting.

14. Remove Special Tool and auxiliary bolts and reinstall distributor rotor.

Printed in Germany – III, 1991

Applying TDC mark to camshaft sprocket

Engine Type M 44.43/44

Note

Camshaft sprockets supplied by the spares department do not have the TDC marks. The TDC mark is applied after the camshaft has been adjusted on the new engine.

1. Place new camshaft sprocket exactly over old camshaft sprocket and transfer TDC mark to new sprocket using a color pen.

2. Fit new camshaft sprocket and adjust camshaft according to instructions on page 15 - 4 to 15 - 6 in Repair Manual.

3. Following item 13, page 15 - 6, apply the final TDC mark to the new camshaft sprocket, using a three-square file and referring to page 15 - 4, Fig. 1.

Printed in Germany – IV, 1992

Camshaft adjustment gauge (shop-made)

Engine Type M 44.43/44

Tools

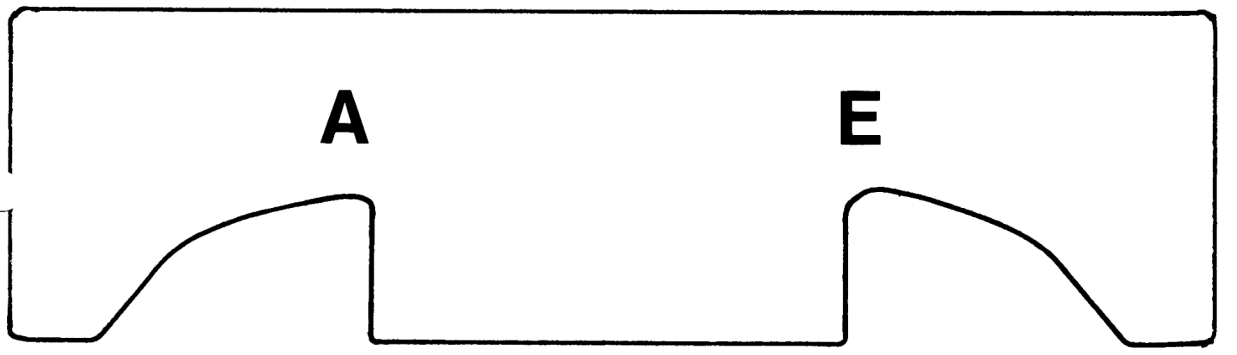

A - Exhaust
E - Inlet

Scale 1 : 1

Note

1. If color marks or casting lugs are missing on the camshafts, use the camshaft adjusting gauge (shop-made) for referencing the camshafts.

2. After having placed the camshafts into the timing chain, the attribution of the cams of **cylinder 1** may be checked with the gauge. Rotate both camshafts against each other so that the lower chain section is tensioned.

Check again after the bearing saddles have been tightened.

Printed in Germany – IV, 1992

Fitting the camshafts

Tools

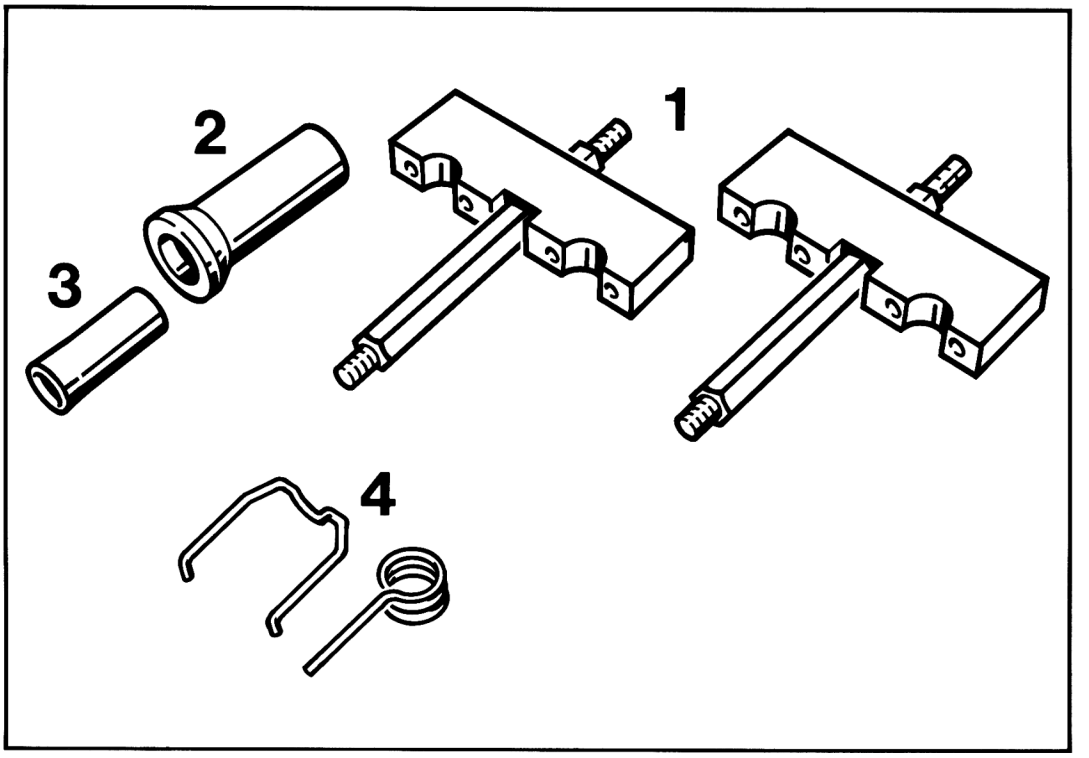

No.	Designation	Special tool	Order number	Explanation
1	Mounting saddles for removal and installation of camshafts	9248	000.721.924.80	Used in conjunction with tensioning pins of Special Tool 9226
2	Thrust piece for seal	9234	000.721.923.40	
3	Assembly sleeve for seal	9233	000.721.923.30	
4	Assembly tools	9530	000.721.953.00	For fitting of "VarioCam" camshaft adjuster and hydraulic toothed belt tensioner

Printed in Germany – IV, 1992

Fitting the camshafts

1. Rotate engine in direction of rotation to approx. 45° before firing TDC (cylinder 1).

2. Compress "VarioCam" camshaft adjuster and lock with Special Tool 9530.

Note

The oil check valve in the camshaft adjuster may drop out when the adjuster is compressed. Retain oil check valve and take it out if required.

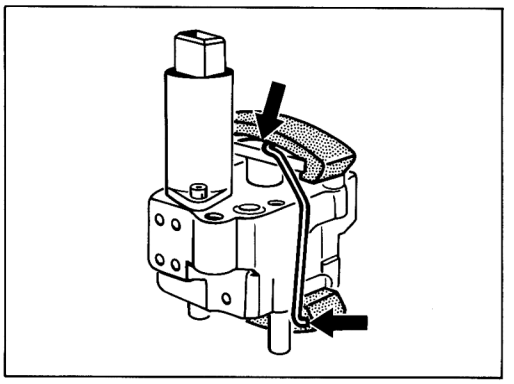

1057-15

3. Place inlet camshaft and exhaust camshaft into timing chain.
   Place both camshafts into timing chain in such a manner that the color marks or casting lugs line up with the chain links marked.

Note

The distance between the inlet camshaft mark and the exhaust camshaft mark is 7 chain outer links.

4. Place "VarioCam" camshaft adjuster between the camshafts into the chain.

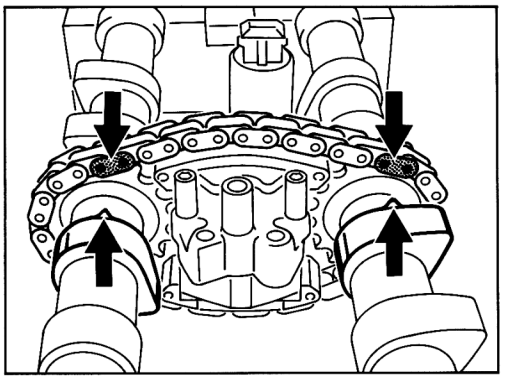

1058-15

5. Oil bearing surfaces of camshaft, cylinder head and cams. Fit camshafts with assembly saddles, Special Tool 9248, used in conjunction with tensioning pins of Special Tool 9226, to cylinder head.

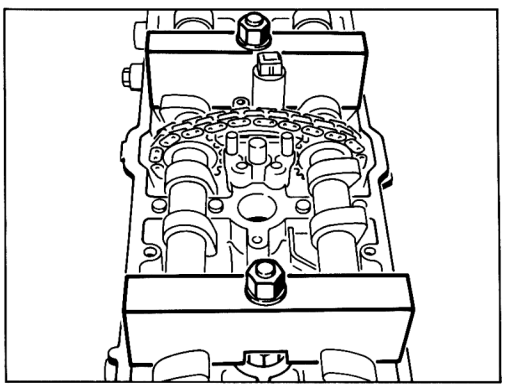

1059-15

6. Fit camshaft bearing saddles and bearing covers. The bearing saddles or covers are machined as a unit with the cylinder head and must always be fitted as a unit. Observe correct identification character and matching number. Tighten bearing saddles or covers to 20 Nm (15 ftlb).

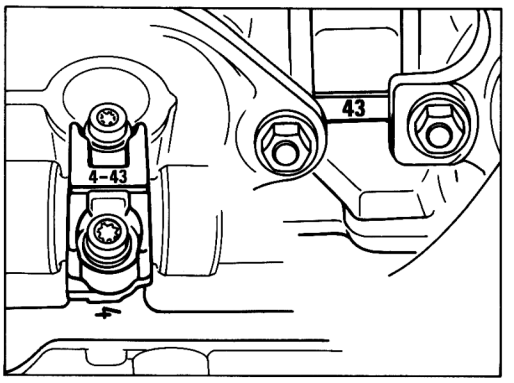

1060-15

7. When fitting, apply Loctite 574 to the sealing surfaces of the front and rear double bearing saddles.

8. Fit "VarioCam" camshaft adjuster to cylinder head. **Take out Special Tool 9530**. Fit oil pipe. Tightening torque of banjo bolt: 10 Nm (7 ftlb).

9. Use Special Tool 9233 (assembly sleeve) and thrust piece 9234 to press the seal into the drive side of the camshaft. Oil sealing lip before fitting the seal.

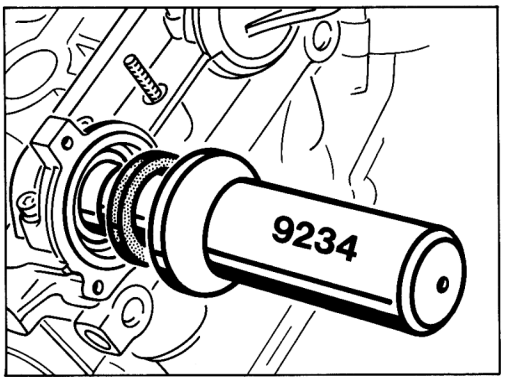

1061-15

Note

If a damaged toothed belt has caused the valves to be damaged by the pistons, it is mandatory to replace the timing chain. Visually check chain sprockets and chain tensioner thoroughly.

Printed in Germany – IV, 1992

Fitting the camshaft seal

1. Place sealing washers or lock pins, respectively, into bearing surfaces and fit bearing saddle, applying some Loctite 574.
   Tightening torque: 20 Nm (15 ftlb).

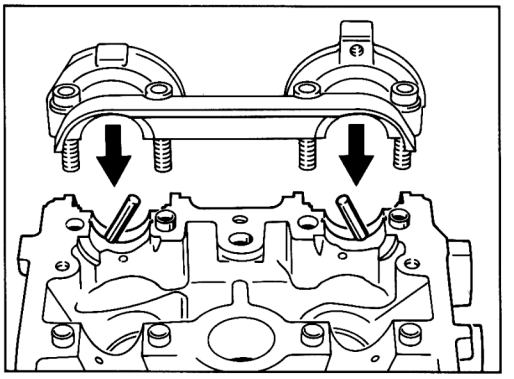

1062-15

2. The seal cover may only be used with Special Tool 9234 after the bearing saddle has been tightened.

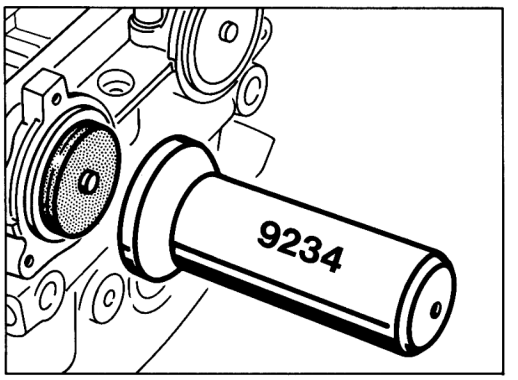

1063-15

Engine fitted

Note

If the sealing cover leaks with the engine fitted to the vehicle, fit the sealing cover as follows:

1. Place sealing washers or lock pins, respectively, into bearing surfaces.

2. Coat bearing saddle with Loctite 574 and fit saddle. Place a 0.02 mm feeler gauge between bearing saddle and cylinder head and manually tighten bolts lightly.

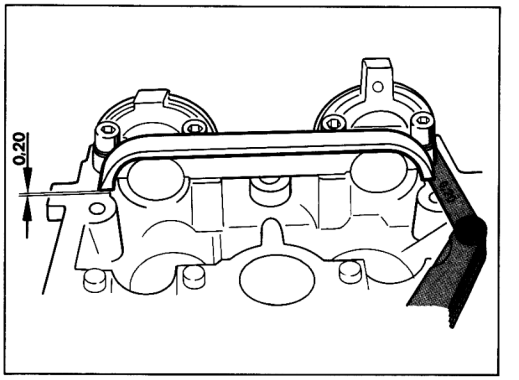

1064-15

3. Oil sealing cover lightly and press in manually. Tighten bearing saddle to specified torque.
   Tightening torque: 20 Nm (15 ftlb)

Printed in Germany – IV, 1992

Camshaft references

Camshaft references	Worldwide as of MY '92
	Engine Type 968 M 44.43/44
Camshafts	
Inlet camshaft	944.105.277.09
Exhaust camshaft	944.105.275.10
Marking between thrust bearing and cam of cylinder 1 or on rear face	277.09 275.10
Camshaft timing 1 mm stroke, zero clearance	
Basic timing	
Inlet opens	7.5° CR after TDC
Inlet closes	52 ° CR after BDC
Exhaust opens	31 ° CR bef. BDC
Exhaust closes	1 ° CR after TDC
Torque timing	
Inlet opens	7.5° CR bef. TDC
Inlet closes	37 ° CR after BDC
Exhaust opens	31 ° CR bef. BDC
Exhaust closes	1 ° CR after TDC

Printed in Germany – IV, 1992

Machining the cylinder head mating face

Checking cylinder head for distortion

Using a feeler gauge and ruler or straight edge, check the cylinder head mating face for distortion.

Admissible distortion of the mating face: 0.05 mm

Distorted cylinder heads may be repaired by machining the mating face. Admissible distortion after machining: 0.03 mm.

Machining the cylinder head

Reface cylinder head mating face only until the surface is level. Max. wear limit: 146,6 mm

Note for refacing the mating face:
Max. roughness = 0,015 mm

If the new-dimension tolerance is exceeded during machining, a cylinder head gasket with a thickness of 1.4 mm must be fitted.

New dimension A = 147 ±0.1 mm
Wear limit A =146.6 mm

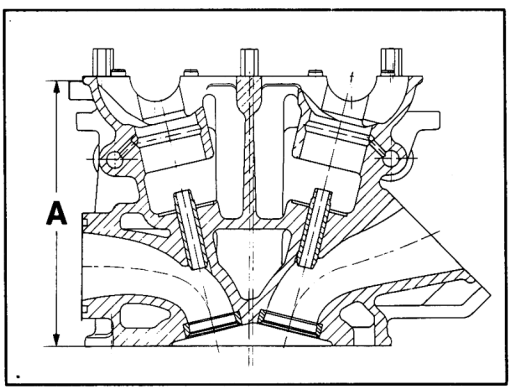

1126-15

Machining dimension and identification of the cylinder head

New dimension : 147 ±0.1 mm
Gasket : 1.1 mm
Identification : none

Refacing dimension : 146.8...146.6 mm
Gasket : 1.4 mm
Identification : N

Identification „N"

To be applied on the exhaust side between cylinder nos. 2 and 3, on the boss below the mating surface of the cylinder head cover.

Height of stamped character „N" 6 mm

Printed in Germany - IV, 1992

Removing and installing cylinder head

Engine Type M 44.43/44

Removal

1. Place protective covers on fenders and disconnect ground cable from battery.

2. Remove air cleaner assembly complete with air mass sensor. Remove engine covers.

3. Undo distributor cap, pull off plug connectors, unclip cover for fuel rail and put aside along with ignition leads.

4. Pull off connector for oil temperature sender and camshaft adjuster. Unscrew fuel return and feed lines from fuel pipe, making sure a second wrench is used to lock. Undo fuel rail at intake distributor and take out along with injector valves. Put fuel rail complete with wiring harness to the rear. Do not kink fuel lines.

5. Remove engine undertray. Undo exhaust system at exhaust manifold / exhaust pipe flange.

6. Pull off coolant hose between reservoir and thermostat housing and catch coolant in a suitable container.

7. Remove ATF reservoir from body. Remove coolant pipe with heater valve. Bend heat shroud slightly forwards.

8. Pull connector off idle speed positioner and throttle valve switch. Unhook throttle valve operating gear and remove bracket complete with idler. Pull vacuum hose off intake rail and throttle body. Remove coolant hose from reservoir at throttle body.

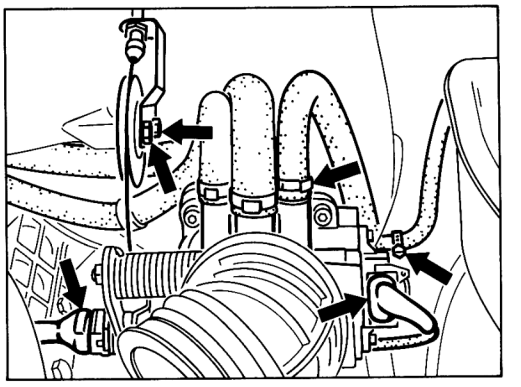

1251-15

9. Remove oil dipstick. Pull vacuum non-return valve from brake booster. Remove coolant hose between radiator and cylinder head from breather flange. Undo intake rail at left-hand engine mount.

Printed in Germany – VII, 1992

10. Remove bracket for oxygen sensor connector from intake rail. Loosen breather hose at oil separator and coolant hoses at connecting flange and pull off. Remove wiring harness bracket from connector flange.

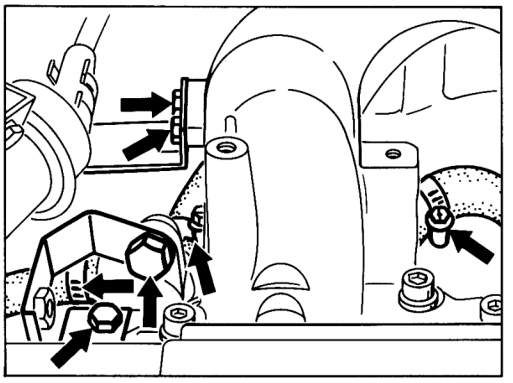

1252-15

11. Detach and remove intake rail from cylinder head. Remove rocker cover, toothed belt cover and camshaft sprocket console.

12. Rotate engine in direction of rotation and set engine to firing TDC of cylinder No. 1. Slacken camshaft toothed belt and pull belt off camshaft sprocket. Refer to page 15 - 1 to 15 - 4.

13. Take out distributor rotor. Tighten camshaft sprocket with three M 5 x 20 mm auxiliary screws to keep the basic camshaft setting from shifting when the central camshaft bolt is removed.

14. Undo central bolt, making sure a second wrench is used to lock. Remove camshaft sprocket and rear console. Disconnect connector for Hall sender unit.

15. Remove „VarioCam" camshaft adjuster from cylinder head. Remove bearing cap from cylinders No. 1 and 3. Retain both camshafts in bearings using Special Tool 9226. Undo and lift off front twin bearing saddle and remaining bearing caps. For installation of camshafts, refer to page 15 - 11 to 15 - 13.

16. The rear twin bearing saddle may remain attached to the cylinder head. Loosen Special Tool 9226 in a uniform manner and remove both camshafts complete with camshaft adjuster and put them aside.

17. Undo cylinder head. Undoing sequence: From outside to inside. Lift off cylinder head. (If tolerances are too narrow, the right-hand engine bracket must be separated from the hydraulic mount)

Note

If traces of oil ingress in the water are found, the cylinder head must be examined closely by visual inspection for hairline cracks. For this purpose, check the cooling system for tightness. Run tightness check with tester VW 1274 across the reservoir (max. pressure 1 bar). The camshaft cap must be removed for visual checking.

Printed in Germany – VII, 1992

Installation

Note

The cylinder head may be fitted with the engine remaining in the car.

1. Place cylinder head gasket into correct position.

2. Fit cylinder head.
   Tightening sequence:

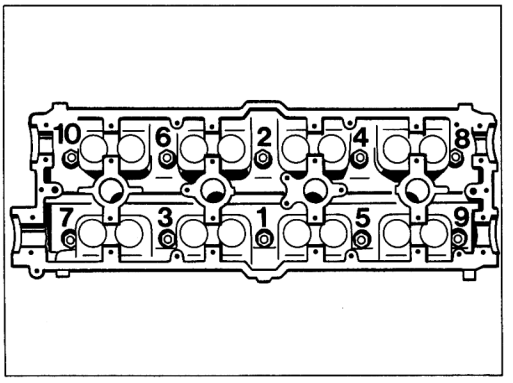

271-15

For unbolting, follow opposite sequence.

3. Replace gaskets, seals and O-rings before fitting the cylinder head. Tighten nuts and bolts to the specified torque.

4. Top up coolant and bleed cooling system. Warm up engine to operating temperature, check coolant level again and top up if required.

Cylinder head tightening specifications

Engine Type M 44.43/44

1st stage	20 Nm (15 ftlb)
2nd stage	60° turning angle
3rd stage	90° turning angle

Note

Do not use any lubricant when fitting the cylinder head nuts and washers. Only the threads of the studs should receive a thin coat of engine oil.

Printed in Germany – VII, 1992

Valve dimensions

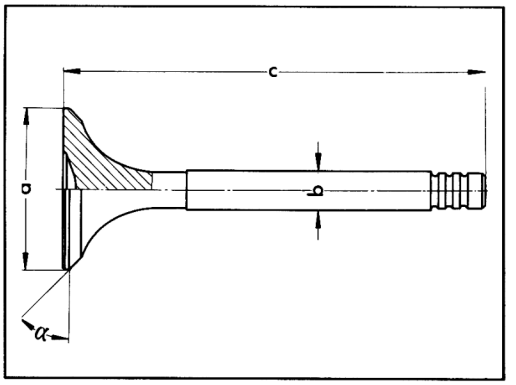

15/127

Valve dimensions

Engine type M 44.43/44

Dimens.	Inlet	Exhaust
a	**39** mm	33 mm
b	6.98 mm	6.97 mm
c	114.70 mm	113.60 mm
α	45°	45°

Printed in Germany – VIII, 1993

Dismantling and assembling camshaft drive

Tools

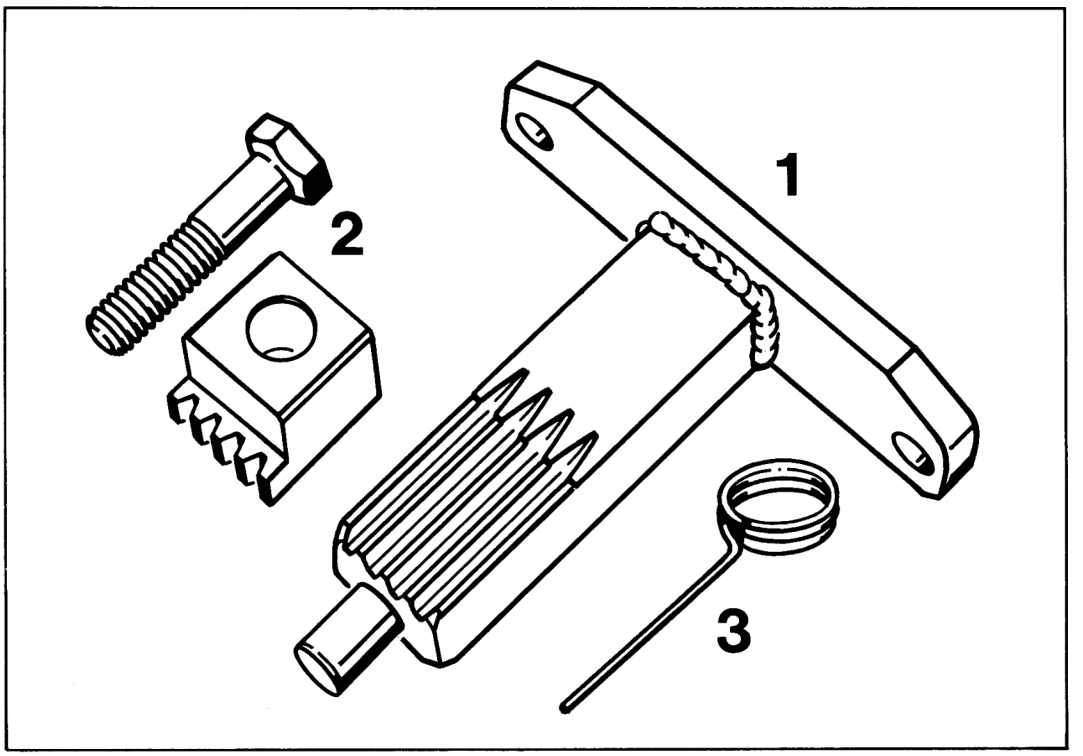

No.	Designation	Special tool	Order number	Explanation
1	Toothed sector	9206/1	000.721.920.61	Engine installed
2	Toothed sector with hexagon bolt M 12 x 1.5 x 60	9238/1	000.721.953.81	
3	Assembly tool for toothed belt tensioner	9530	000.721.953.00	
–	Spacer sleeve			refer to page 15 - 30
–	Piston retracting tool			refer to page 15 - 30

Printed in Germany – VIII, 1993

Dismantling and assembling camshaft drive

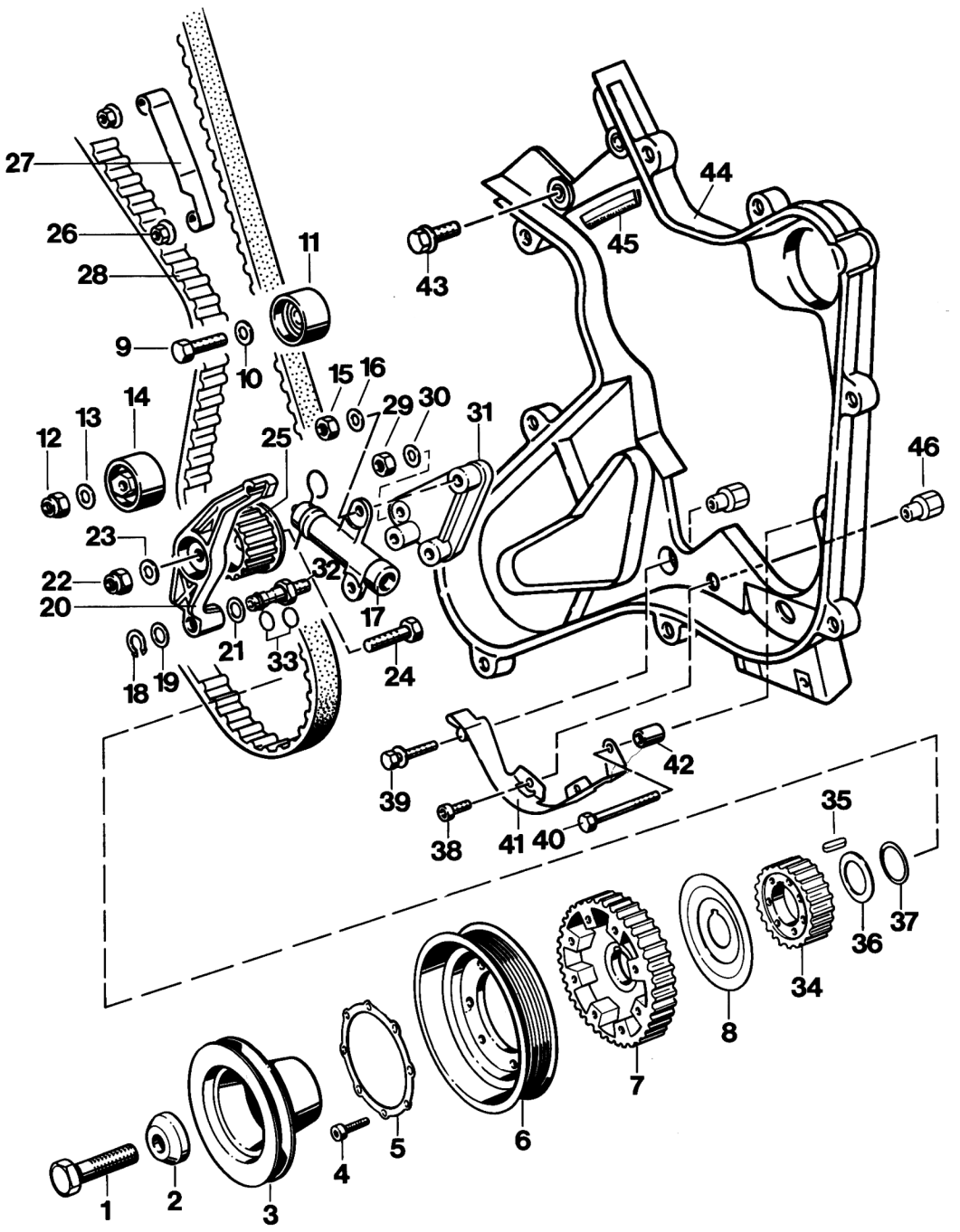

Printed in Germany – VII, 1992

Nr.	Benennung	Stück	Beachte: Ausbau	Einbau
1	Hexagon head bolt M 16 x 1.5 x 60	1		Tightening torque 210 Nm (155 ftlb)
2	Washer	1		
3	Pulley	1		
4	Pan head screw M 6 x 25	8		Tightening torque 15 Nm (11 ftlb)
5	Tab washer	1		
6	Pulley	1		
7	Gear drive for balance shafts	1		
8	Flange washer	1		
9	Hexagon head bolt M 10 x 30	1		Tightening torque 45 Nm (33 ftlb)
10	Washer A 10.5	1		
11	Pulley	1		
12	Lock nut M 10	1		
13	Washer A 10.5	1		
14	Pulley	1		
15	Hexagon head nut	2		
16	Washer A 8.4	2		
17	Hydraulic toothed belt tensioner	1		
18	Snap ring 14 x 1	1		
19	Shim 14 x 20 x 0.5	1		
20	Tensioning lever for toothed belt tensioner	1		
21	Shim 14 x 20 x 0.5	1		
22	Lock nut	1		Tightening torque 45 Nm (33 ftlb)
23	Washer			
24	Hexagon head bolt M 10 x 45	1		

Printed in Germany – VII, 1992

Nr.	Benennung	Stück	Beachte: Ausbau	Einbau
25	Tensioning pulley	1		
26	Lock nut	2		
27	Locking clamp	1		
28	Camshaft toothed belt	1	Treat carefully, do not twist or turn	
29	Hexagon head nut	1		
30	Washer A 8.4	1		
31	Console	1		
32	Shaft bolt M 10	1	Heat shaft bolt area with hot air gun	Use **Loctite 270** to bond into crankshaft. Pack lubricating groove with **Optitemp PU 035** grease, Part No. 000 043 110 00. **Tightening torque 45 Nm (33 ftlb).**
33	O-ring 12 x 1.5	2		Replace
34	Camshaft drive gear	1		Apply a thin coat of **Optimoly HT** to mount area. Lettering points to the front.
35	Woodruff key 5 x 5 x 22	1		
36	Support washer	1		
37	Round seal	1		Replace
38	Pan-head screw	2		
39	Hexagon head bolt with captive washer M 6 x 42	1		
40	Hexagon head bolt M 6 x 70	1		
41	Guide rail	1		For adjustment, refer to page 13 - 1

Printed in Germany – VII, 1992

No.	Designation	Qty.	Note: Removal	Installation
42	Spacer sleeve	1		
43	Combination screw	2		
44	Toothed belt cover	1		
45	Anti-chafing protection	1		
46	Spacer	3		

Special note on toothed belts and drive belts

As a rule, make sure the toothed belts and drive belts are **not kinked** during assembly, packing and storage. Improper handling may cause incipient damage to the camshaft toothed belts and may eventually lead to engine damage.

Printed in Germany – VIII, 1993

Assembly note

Slackening camshaft toothed belt

1. Remove idler pulley. Fit spacer sleeve (shop-made tool) with a M 10 x 55 hexagon head bolt.

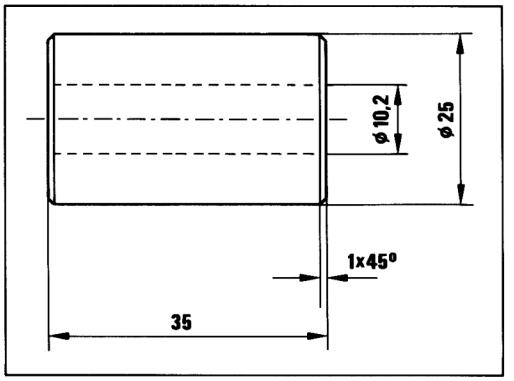

1349-15

2. Align piston retracting tool between spacer sleeve and toothed belt tensioning lever. Compress toothed belt tensioner slowly until a resistance is felt. Wait for a few seconds and rotate somewhat more.

3. Keep on rotating in this sequence until the pushrod-to-housing holes are lined up and the pushrod can be locked with **Special Tool 9530**.

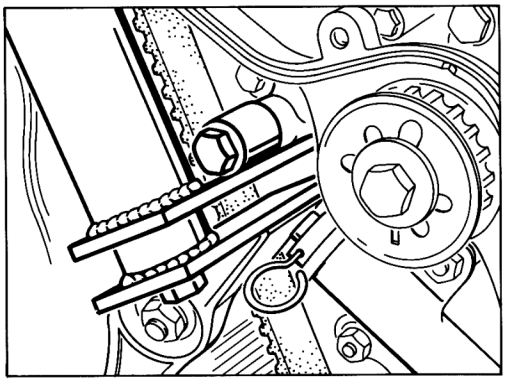

1350-15

Illustration shows tensioned belt tensioner locked with **Special Tool 9530, assembly tool (pin)**.

Note

Never rotate the engine **if the camshaft toothed belt is not fitted or tensioned** as this may cause damage to the valves.

The piston retracting tool is available from tool suppliers.
Order No.:
03.9314-4950.3/01

Supplier:

Messrs.
Alfred Teves GmbH
Postfach 900 120
D-60441 Frankfurt 90

Printed in Germany – VIII, 1993

Removing and installing lubrication system components

Tools

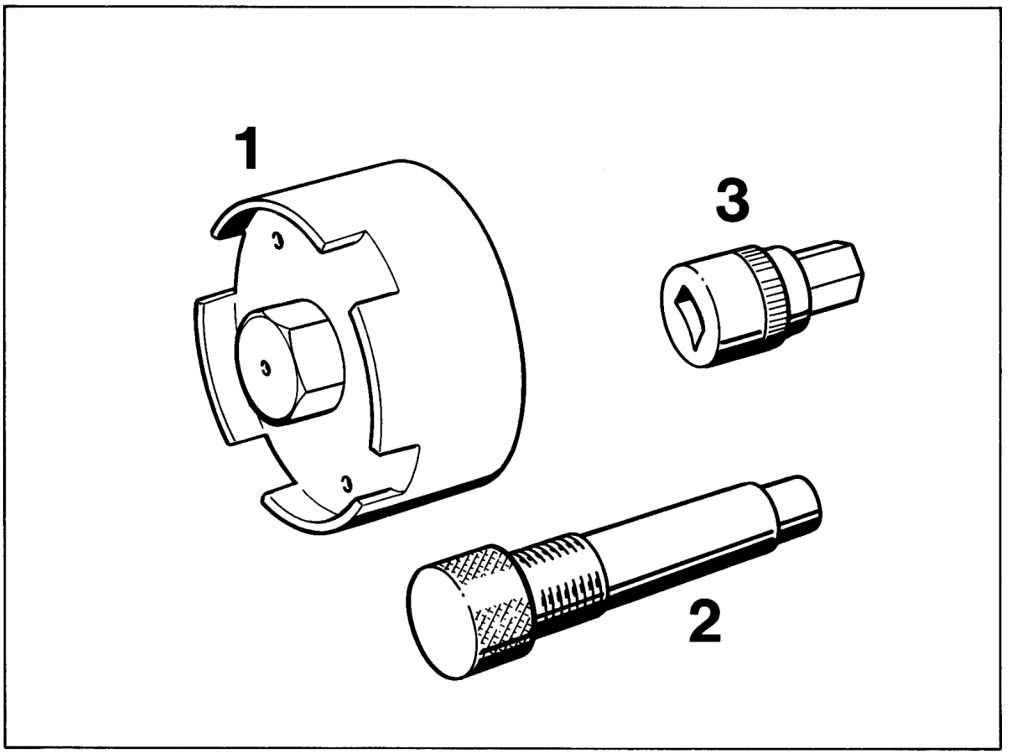

1118-17

No.	Designation	Special tool	Order number	Explanation
1	Oil filter wrench	9204	000.721.920.40	
2	Assembly pin	9262/1	000.721.926.21	
3	Screwdriver insert for plug / thermostat		985-17	e.g. Hazet, available from tool shops

Printed in Germany – IV, 1992

Removing and installing lubrication system components

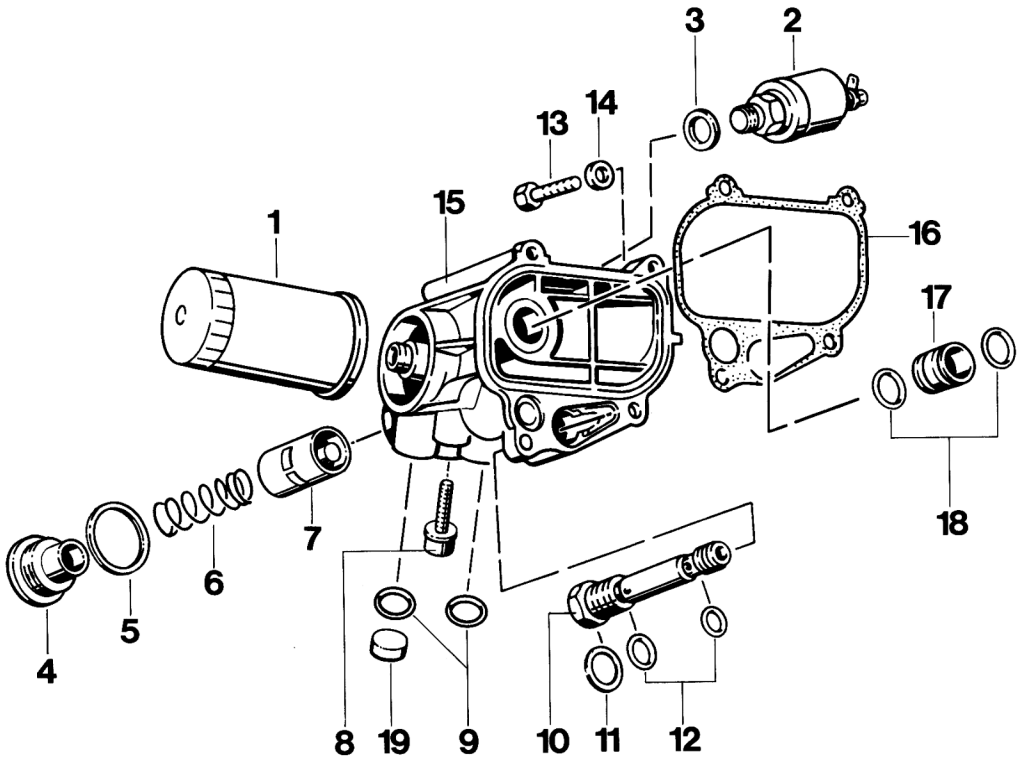

1100-17

Printed in Germany – IV, 1992

No.	Designation	Qty.	Note: Removal	Installation
1	Oil filter	1	Use Special Tool 9204	Oil gasket lightly, tightening torque 20 Nm (15 ftlb)
2	Oil pressure sender unit	1		Tightening torque 35 Nm (26 ftlb)
3	Seal	1		Replace
4	Plug M 42 x 1.5	1		Tightening torque 50 (37 ftlb) + 10 Nm (7 ftlb), use screwdriver insert (17 mm dia.) (e.g. Hazet 985-17)
5	Seal A 42 x 49	1		Replace
6	Spring	1		Check for correct seating
7	Thermostat	1		
8	Pan head screw with captive washer M 8 x 25	1		Tightening torque 28 Nm (21 ftlb)
9	O-ring	2		Replace
10	Oil pressure release valve	1		Tightening torque 45 Nm (33 ftlb)
11	Seal A 20 x 24	1		Replace
12	O-ring	2		Replace
13	Hexagon head bolt M 8 x 25	4		Tightening torque 28 Nm (21 ftlb)
14	Washer	4		
15	Thermostat housing	1		Align with assembly pin 9262/1
16	Profiled gasket	1		Replace
17	Flange	1		Preassemble in thermostat housing, press in to stop
18	O-ring	2		Replace, oil lightly
19	Cover	3		Bonded in place with Loctite 649

Printed in Germany – IV, 1992

Assembly note

Aligning the thermostat housing

1. Fit preassembled housing to crankcase and tighten hexagon head bolts lightly. Screw in oiled assembly pin 9262/1 manually, center and tighten hexagon head bolts crosswise. If a resistance is felt when the assembly pin is withdrawn, the fitting operation must be repeated.

2. Fit oil pressure release valve with new seal and oiled seals.
   Tightening torque 45 Nm (33 ftlb).

Printed in Germany – IV, 1992

Dismantling and assembling oil pressure release valve

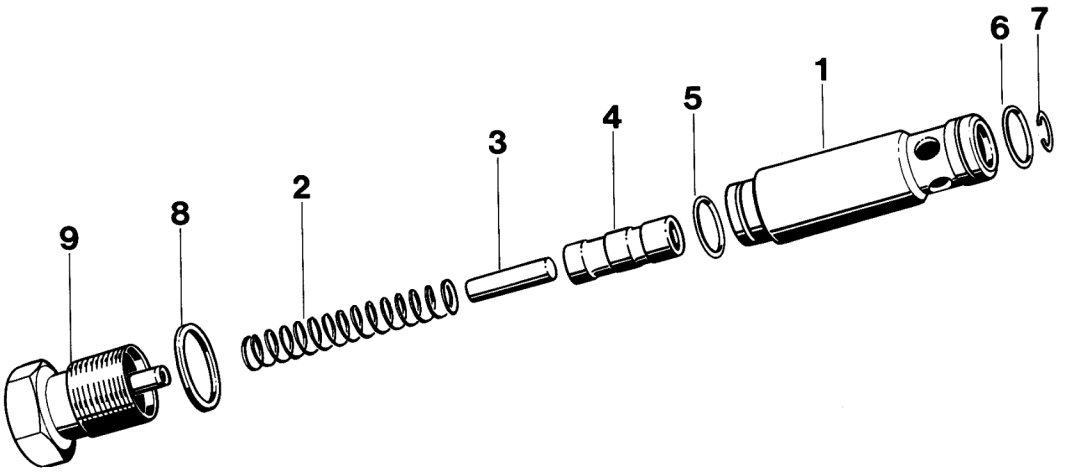

No.	Designation	Qty.	Note: Removal	Note: Installation
1	Slide valve housing	1		
2	Thrust spring	1		
3	Damping plunger	1		
4	Slide plunger	1		
5	O-ring	1		Replace, oil lightly
6	O-ring	1		Replace, oil lightly
7	Snap ring	1	May remain in slide valve housing	Check for correct seating
8	Seal A 20 x 24	1		Always to be replaced
9	Plug with grooved pin	1		Tightening torque 45 Nm (33 ftlb)

Printed in Germany – IV, 1992

Assembly notes

Note

Before dismantling the oil pressure release valve, use a suitable tool, e.g. a round wooden or plastic rod, to check if the slide plunger (4) slides smoothly in the slide valve housing (1). If it sticks or binds, the oil pressure release valve must not be fitted anymore.

Dismantling

1. Tighten oil pressure release valve at hexagon in a vise.

2. Put on protective gloves and pull slide housing out of plug.

Note

The slide valve housing (1) can only be pulled off with difficulty since the O-ring (5) must be destroyed in the process. In addition, the valve is spring-loaded.

Assembly

1. Oil O-ring (5) lightly and fit to slide housing.

2. Coat damping plunger (3) and slide plunger (4) with oil and preassemble them in the slide valve housing.

3. Grease slide valve housing (1) well in O-ring area, e.g. using Optimol Olit 2 EP or TL-VW 735.

4. Fit thrust spring (2), press slide valve housing into plug, using a vise and protecting the housing in a suitable manner (e.g. with a wooden or plastic block etc.).

5. Apply a thin oil coat to O-ring (6) and fit to slide valve housing.

Printed in Germany – IV, 1992

Removing and installing oil restraining valve

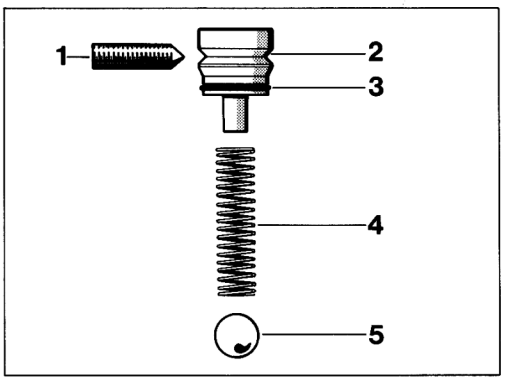

31-17

1 – Threaded pin

2 – Spring guide

3 – O-ring

4 – Thrust spring

5 – Ball

1. Remove cylinder head cover. Screw one hexagon head bolt, e.g. M 6 x 40, into spring guide from above. Undo threaded pin by two turns and pull out spring guide in upward direction.

2. Take out thrust spring and ball using a magnet. Clean ball seat, ball, thrust spring and oil duct thoroughly. The ball seat remains in cylinder head and must not be damaged.

3. Replace O-ring before fitting and oil lightly. Tightening torque for threaded pin: 3.5 Nm (3 ftlb).

Printed in Germany – IV, 1992

Checking oil pressure

1. Remove oil pressure transmitter and screw oil pressure tester VW 1342 together with M 10 x 1 adapter, and M 10 x 1/M 18 x 1.5 adapter, in its place in the oil/water cooler housing.

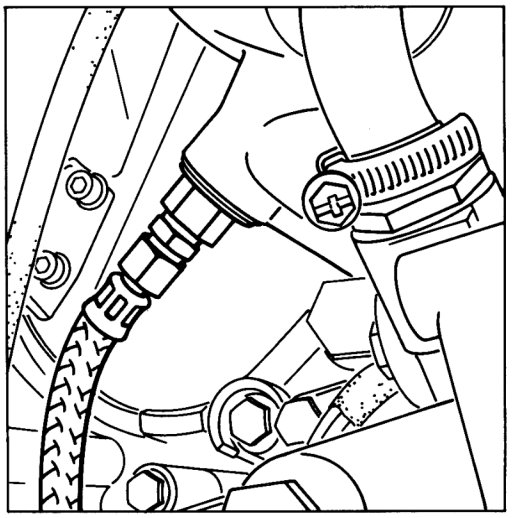

2. Run engine to operating temperature (80° C oil temperature), checking the temperature with, for example, an oil temperature tester (Special Tool 9122 + 9122/2).

3. At idle speed the oil pressure should be 2.5 bar or more.
   Have a second person accelerate the engine speed to 4000 rpm.
   Read oil pressure from tester. The value should be greater than 4.5 bar.

4. Install oil pressure transmitter with a new A 18 x 24 seal.
   Tightening torque: 35 Nm.

Printed in Germany – VIII, 1993

Cleaning the entire engine oil system after an engine failure (bearing failure)

Note

This cleaning sequence is only intended to give pointers as to whereyou may find chips. The actual amount of work involved will depend oneach individual case of engine damage.

Replace the following parts:

- Hydraulic valve tappets
- Oil pressure relief valve (crankcase)
- Oil filter

The following parts must be dismantled, inspected and cleaned thoroughly:

- Oil pump
- Thermostat housing
- Oil restraining valve in cylinder head

The following parts must be cleaned thoroughly and/or rinsedthrough repeatedly:

Note:

All oil bores may be rinsed through thoroughly with benzine and a commercially available oil/benzine syringe.

- Oil pan
- Oil intake pipe
- Oil drain pipe
- Crankcase
- Crankshaft
- Cylinder head
- Oil lines
- Oil cooler
- Oil filler neck

Change oil filter and engine oil after approx. 500 km.

Note:

After an engine failure, the entire intake system must be inspected for foreign bodies and/or oil and cleaned before assembly.

Printed in Germany – VIII, 1993

Mixing table

(Average values)

Antifreeze-Cooling water

Antifreeze protection to	Antifreeze	Water	Antifreeze	Water
– 30° C	45 %	55 %	3.5 liters	4.3 liters
– 35° C	50 %	50 %	3.9 liters	3.9 liters
– 40° C	55 %	45 %	4.3 liters	3.5 liters

Checking cooling and heating system for tightness

1. Check visually for leaks.

2. Check coolant and heater hoses for proper routing, porosity, cracks and chafing. Replace all damaged hoses.

3. Retighten hose clamps.

Printed in Germany – IV, 1992

Fuel vacuum line routing

Engine Type M 44.43/44

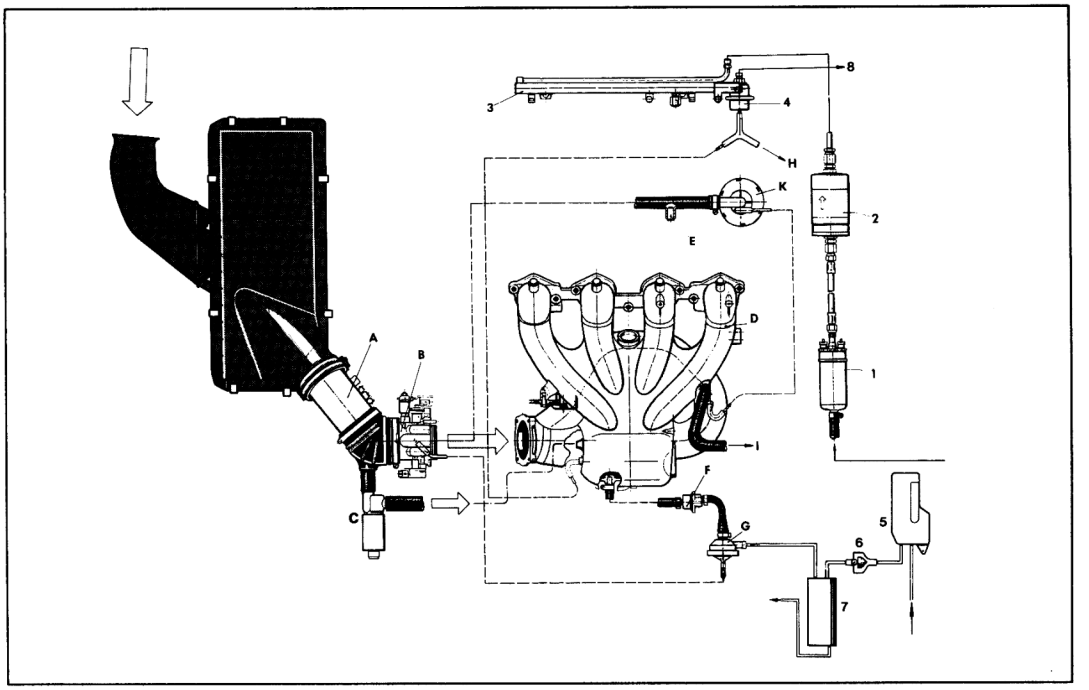

1088-20

A - Air flow meter

B - Throttle body

C - Idle speed positioner

D - Inlet manifold

E - Overflow valve

F - Tank venting valve

G - Vacuum valve

H - Heating

I - Brake booster

K - Oil separator

1 - Fuel pump

2 - Fuel filter

3 - Injection line

4 - Pressure regulator

5 - Expansion tank

6 - Roll-over valve

7 - Carbon canister

8 - Return to tank

Printed in Germany – IV, 1992

Test values

Engine Type M 44.43/44

Test operation	Test values		Special remarks
Electric fuel pump Min. feed	rate 850 cc/30 s		
Fuel pressure (Engine standstill) DME relay jumpered	3.8 ± 0.2 bar		
Check value at idle	3.3 ±0.2 bar		
Leak test Min. pressure after 20 min.	2.0 bar		
Idle speed, rpm Engine type M 44.43 (Manual transmission)	without cat. conv. 840 ± 40**	with cat. converter 840 ± 40**	**Idle speed can only be checked. Idle adjustment is no longer performed.
Engine type M 44.44 (Tiptronic)	880 ± 40**	880 ± 40**	
CO values %	0.5...1.5	0.4...1.2*	* Measured ahead of catalytic converter, oxygen sensor connector not disconnected CO adjustment is no longer performed
HC values ppm	≤300	≤300*	

Printed in Germany – II, 1991

Checking idle and CO level of vehicles without catalytic converter

Engine Type M 44.43/44

Note

No provisions for idle speed adjustment are made any more. Adjustment at the throttle body is therefore no longer performed.

Adjusting the idle CO level

Adjustment requirements

Perfect condition of the mechanical engine components. Loads must be turned off while adjustments are made. Perform adjustments as rapidly as possible to avoid excessive heat buildup in the inlet ducts as this would give faulty CO level readings. Ambient temperature 15 to 35 deg. C.

1. Warm up engine to operating temperature. (Oil temperature 70 to 90 deg. C), check with oil temeprature tester (Special Tool 9122 and 9122/2).

2. Check CO level. If the CO level is not within the specified adjustment range, correct adjustment at CO potentiometer. Remove plug from inlet bore to CO level adjuster screw.

3. The CO potentiometer is located behind the right-hand pop-up headlight.

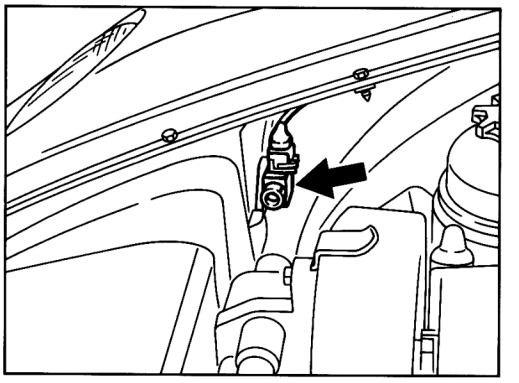

789-03

CO level setting: 0.5...1.5%
Turning clockwise - richer mixture
Turning counterclockwise - leaner mixture

Check idle speed.

Connect separate tachometer according to manufacturer's instructions.

Idle speed:

Engine Type M 44.43	840 ± 40 rpm
Engine Type M 44.44	880 ± 40 rpm

Printed in Germany – II, 1991

Checking idle speed and CO level on vehicles with catalytic converter

Engine Type M 44.43/44
Note

Idle and CO level adjustment is no longer possible on vehicles fitted with catalytic converter. When checking the idle CO level, the oxygen sensor is not disconnected.

Check requirements

Perfect condition of the mechanical engine components. Loads must be turned off while checks are made. Perform checks as rapidly as possible to avoid excessive heat buildup in the inlet ducts as this would give faulty CO level readings. Ambient temperature 15 - 35 deg. C.

1. Connect commercially available exhaust gas adapter to test connector of catalytic converter.

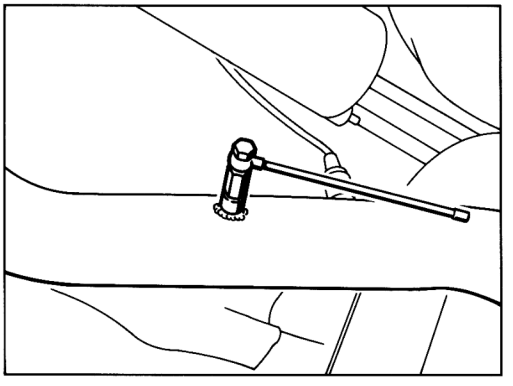

788-03

2. Warm up engine to operating temperature. (Oil temperature 70 to 90°C), check with oil temperature tester (Special Tool 9122 and 9122/2).

3. Do not disconnect oygen sensor connector. Connect CO level measuring instrument and separate tachometer according to manufacturer's instructions.
   CO check value: 0.4...1.2%

   Idle speed:

Engine Type M 44.43	840 ± 40	rpm
Engine Type M 44.44	880 ± 40	rpm

Printed in Germany – II, 1991

Removing and installing DME injection system components

Printed in Germany – III, 1991

Removing and installing DME injection system components

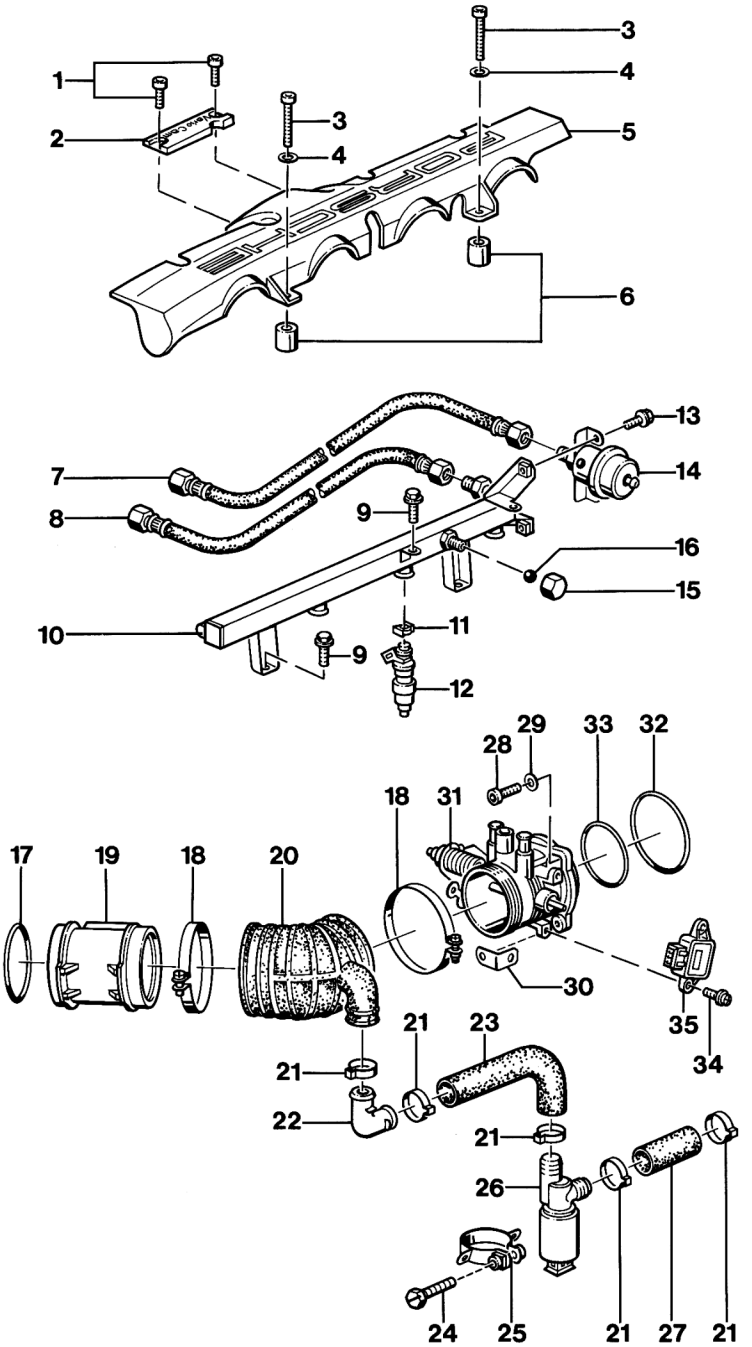

Printed in Germany - III, 1991

No.	Designation	Qty.	Note: Removal	Installation
1	Pan head screw M 5 x 10	2		
2	VarioCam script	1		
3	Pan head screw M 5 x 35	2		
4	Washer	2		
5	Cover	1		
6	Spacer bushing	2		
7	Fuel return line	1	use a second wrench to lock when removing	use a second wrench to lock when removing
8	Fuel supply line	1	use a second wrench to lock when installing	use a second wrench to lock when installing
9	Hexagon head bolt M 6 x 12	4		
10	Fuel distributor pipe	1		
11	Retaining clip	4		
12	Injection valve	4		Replace seals. Apply a light coat of oil to the seating bore
13	Hexagon head bolt M 6 x 12	2		
14	Pressure regulator	1		Replace seal. Apply a light coat of oil to the seating bore
15	Cap nut	1	use a second wrench to lock when removing	Tightening torque 12 Nm (9 ftlb). Use a second wrench to lock
16	Ball	1		
17	O-ring	1		
18	Hose clamp	2		
19	Air mass meter	1		
20	Shroud	1		
21	Hose clip	5		

Printed in Germany – III, 1991

No.	Designation	Qty.	Note: Removal	Note: Installation
22	Union	1		
23	Hose	1		
24	Hexagon head bolt M 8 x 40	1		
25	Clamp	1		
26	Idle speed positioner	1		
27	Hose	1		
28	Pan head screw M 6 x 25	4		
29	Washer	3		
30	Retaining bracket	1		
31	Throttle body	1		
32	Round seal 82 x 2.5	1		always to be replaced
33	Round seal 65 x 3	1		always to be replaced
34	Philips screw M 4 x 10	2		
35	Throttle switch	1		

Printed in Germany - III, 1991

Removing and installing injection valves

Removing

1. Detach and remove cover for injection valves and plug leads. Unclip plastic cover and leave suspended at plug leads.

2. Pull off vacuum hose at pressure regulator and electric connector at oil temperatur sensor (cylinder head).

3. Undo fuel distributor pipe at intake distributor and take out from above. Pull off electrical connector and retaining clamp at injection valve. Take out injection valve and catch overflowing fuel in a suitable container.

Installation

1. Replace injection valve seals. Oil seating bore of seals lightly.

2. Check visually for leaks.

Printed in Germany – III, 1991

Replacing spark plugs

1. Pull off spark plug leads.

2. Remove spark plugs using a commercially avail. plug wrench (e.g. Hazet No. 767-1). A spark plug wrench is supplied with the tool kit.

3. Apply a light coat of **Molykote paste HTP White** to the plug threads.

Tightening torque: 25 to 30 Nm (18 to 22 ftlb)

Printed in Germany – III, 1991

DME control units as of Model Year '92

Engine Type M 44.43/44

Model	Production control unit	Introduction date	Remarks
92	944.618.123.00	Start of production July, '91	
	944.618.123.01	approx. September, '91	
	944.618.123.02	December, '91	

Spare control unit

944.618.123.02

Printed in Germany – IV, 1992

Removing and installing knock sensor

1. To remove and install the knock sensors, unbolt the intake rail from the engine. Refer to page 15 - 21 to 15 - 22.
   The coolant hoses remain connected. The intake rail remains in the engine compartment.

2. Undo and take out knock sensors. Disconnect connector.

3. Reinstall with a new genuine M 8 x 30 bolt (micro-sealed) **without washer**.

Tightening torque: 20 Nm (15 ftlb.)

Note

Handle the knock sensor very carefully. The knock sensor must never drop to the ground from greater heights as this may damage the piezocrystal.

Printed in Germany – VIII, 1993

DME-Diagnosis / Troubleshooting

968

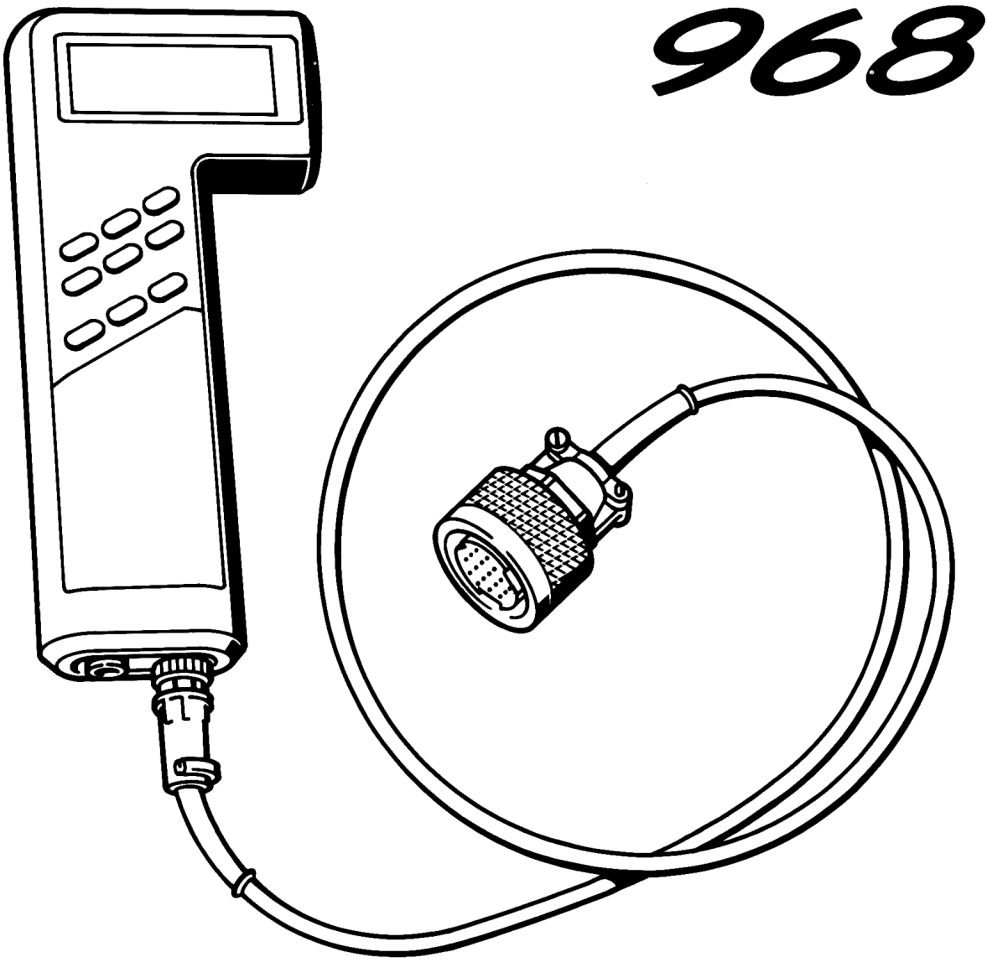

Dr. Ing. h.c. F. Porsche Aktiengesellschaft

Test Point	Description	Page
	Precautions	2
	Important Vehicle Information	3
	Test Requirements	4
	Pin assignments of DME Control Unit Plug	7
	Effects of Faults (Cross Reference List)	8
1	Power Supply	9
2	Engine Temperature Sensor 2	10
3	Throttle Potentiometer	11
4	Oil Temperature Sensor	11
5	Rpm signal	11
6	Speed signal <- Speedometer	12
7	Air flow sensor	13
8	Oxygen regulation	14
9	Oxygen sensor	15
10	Ignition timing change	15
11	Opening winding of idle stabilizer	16
12	Closing winding of idle Activation	16
13	Triggering of AC relay	17
14	Knock sensor 1	17
15	Knock sensor 2	18
16	Control unit faulty	18
17	Hall signal	18
18	VarioCam	19
19	Idle CO potentiometer	19
20	Control unit faulty	19
21	Fuel pump relay (DME relay)	20
22	Tank ventilation valve	20
23	Check Engine warning lamp	21
24 - 27	Injector valves	22
28	Fuel pressure	24
29	Intake system leaks	26
30	Ground and plug connections	26
31	Ignition system	28
32	Alternator, regulator	29
33	Leads K and L	28
	CO and idle speed test	30
	Coding the control unit	30
	Check Engine lamp	31

Printed in Germany – III, 1991

Precautions

Increased demands of modern engines on the ignition systems and a desire for freedom from maintenance have led to the introduction of electronic ignition systems in standard production some time ago. Normally the ignition power of electronic systems (of almost all makes) is greater than that of conventional systems and further power increases can be expected in the future. This places electronic ignition systems in a power range where touching live parts or terminals may be hazardous (this applies both to primary and to secondary circuits).

In this context, we must point out that all relevant national safety regulations and legislation must always be observed when working on or testing ignition systems. The ignition (i.e. ignition or power supply) must always be switched off when working on the ignition system.

Such work includes:

- Connecting engine testers, e.g.
  timing light, dwell angle/speed tester, oscilloscope etc.

- Replacing ignition system components, e.g.
  spark plugs, ignition coil, distributor, ignition leads etc.

The above hazardous voltage will be present in the entire system should it be necessary to switch on the ignition for ignition tests or engine adjustments.

Consequently, sources of hazardous voltages are not limited to the individual components of the ignition system (such as distributor, ignition coil, control unit, ignition tackle etc.) but are also present on wiring harnesses, plug connections and testers.

Printed in Germany – III, 1991

Important Vehicle Information

- Always turn off the ignition or disconnect the battery for resistance tests. (If this is not done, the tester may be destroyed).
- Always disconnect the rpm sensor plug for compression tests. (If this is not done, hazardous high voltages and insulation damage to the ignition coil, high-voltage distributor and ignition leads may result).
- The specified ignition coil (refer to Order No.) must not be replaced by a different coil.
- Never connect a suppression capacitor to ignition coil terminals 1 and 15.
- Never connect ignition coil terminal 1 to ground for burglar alarm. (Ignition coil and control unit may be destroyed).
- Never connect the positive battery terminal or a test lamp to ignition coil terminal 1. (The control unit will be destroyed)
- Never disconnect the ignition lead from ignition coil terminal 4 to high-voltage distributor terminal 4 while the engine is running.
- Voltage flashover from ignition coil terminal 4 to coil terminals 1 and 15 must not occur. (Control unit may be destroyed).
- To avoid destruction of the control unit, the secondary circuit of the ignition system must be suppressed with at least 4 kΩ, the original distributor rotor with 1 kΩ suppression resistance having to be installed.
- Disconnect DME control unit only after turning off the ignition.
- Flashover or disruptive discharge in the area of the high-voltage distributor cap (poor insulation) may destroy the control unit.
- Never disconnect the battery when the engine is running.
- Battery polarity reversal could lead to destruction of the ignition coil and the DME control unit.
- External engine starting with more than 16 V or with a boost battery charger is not permitted.
- When pulling off the connectors, e.g. for air mass sensor, throttle valve switch, injection valves etc., make sure the inside gasket is not lost.
- Always follow the accident prevention regulations when working on the fuel system.

Printed in Germany – VIII, 1993

Equipment Required for DME Testing:

- Diagnostics tester 9288 with connecting leads
- 1 oscilloscope approved by Porsche
- 1 digital display multimeter with an internal resistance of at least 50 kΩ
- 1 Bosch L-Jetronic test lead, Bosch No. 1684 463 093 (check lead for correct polarity at plugs)
- 2 control unit plug test leads (shop-made) with 2 tab connectors no. 17.457.2 fitted to avoid damage to the plug terminals in the control unit plug during testing.
- 2 adapter test leads, consisting of: 4 plug connectors N 017.483.1 with 2 leads approx. 150 mm long, soledered.
- 1 three-pin test lead (e.g. VAG 1501).

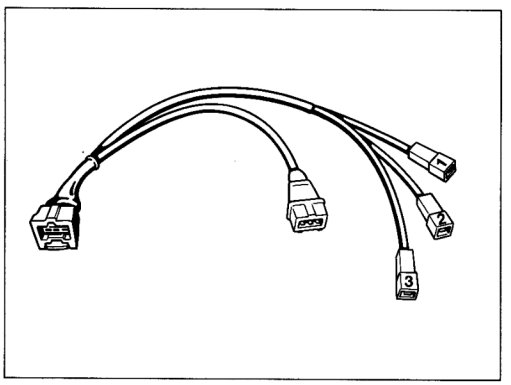

958-24/28

- 2 control unit plug test leads (shop-made) with 4 tab connectors N 17.457.2.

The test leads must always be used for the tests!

All sender and ignition timing signals of Porsche vehicles can be checked with the engine testers recommended by Porsche. Since instructions for connection of testers on a car will differ depending on the equipment manufacturer, these instructions must always be followed to ensure correct tester connection.

The following signals can be checked with the oscilloscope:

- Engine speed
- Vehicle speed
- t_i (injection time)
- Idle stabilizer
- Hall signal
- Tank venting signal
- VarioCam

Note for USA:

If a fault that affects exhaust gas composition is detected by the Check Engine lamp and is read out, repair is possible with standard workshop tools.

Diagnosable DME Control Unit

A self-diagnosis feature with fault memory is incorporated into the DME control unit to permit certain faults to be detected and stored.

The DME control unit has a permanent positive connection to prevent deletion of detected and stored faults when the iginition is switched off. Detected faults remain stored in the fault memory for at least 50 engine starts.

Caution:
If the DME control unit plug or the battery is disconnected, the fault memory will be cleared.

Tester Connections:
The diagnostics socket is located on the right-hand side of the passenger footwell.

Note:
The fault path and fault code displayed on the System Tester 9288 will be complemented by the relevant test point in the troubleshooting plan.

The Eprom module Version 4.0 may be used to select the following menus that may in turn be used to select additional submenus. These are displayed by the System Tester in text form.

Selectable menus:

- Fault memory
- Drive links
- Input signals
- Knock registration
- Actual values
- Drive link active

This DME diagnosis/troubleshooting plan is based on the contents of the fault memory.
Paths not covered by self-diagnosis are diagnosed by conventional means (test points 28 - 33, refer to fault list opposite).

Printed in Germany – III, 1991

Troubleshooting requires that the person performing the tests

- is familiar with the location of components, function and technical relationships of the systems being tested
- is able to read and evaluate Porsche wiring diagrams
- knows the functions of circuits and relays
- is capable of using testers such as oscilloscope, voltmeter, ohmmeter and ammeter, as well as of evaluating the test results.

The fault text displayed indicates the fault path, i.e. the fault may be present anywhere, from the control unit, across all connectors up to the component itself.
Before reading the fault memory, do not try to locate faults by disconnecting plugs etc., since this may be detected and stored as a fault in the fault memory.

Note for System Tester 9288

If the tester display shows ... **not present**, this could mean

- Fault did not exist at time of testing
- In case of a loose contact, an additional + symbol is displayed.
  Example: **... not present +**
  Remedy: Visual inspection of path
- Conditions under which the fault is tested do not correspond to the conditions under which the fault occurred.
  Remedy: Conform with conditions displayed on the tester.

If the **Signal unplausible** message is displayed on the tester, this could mean

- The signal of the monitored component is not within the tolerance range.

Explanations for the counter shown on the tester display
When the fault is detected for the first time, the counter is always set to 50.
If a lower number is displayed, determine the difference between 50 and the value shown. This value represents the number determined from the combination of starting process, meeting the test conditions and non-presence of the fault. When the number 0 is reached, the fault path is deleted in the control unit.
Should the fault status change from not present to present at a number below 50, the counter is reset to 50. If a number above 50 is displayed, the difference indicates the number of loose contacts that have occurred. Even at a value above 50, the counter counts down to zero when the above combination of conditions is met.

Printed in Germany – III, 1991

Pin assignment of DME control unit plug

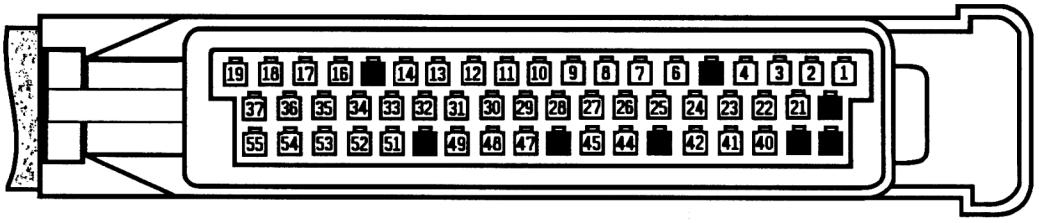

Note

Slots marked black are not used.

1 Ignition coil

2 Ground, ignition output stage (MP IX)

3 Ground (Fuel pump relay)

4 Idle speed positioner, opening winding

5 not used

6 Speed signal at rev counter

7 Air mass sensor signal

8 Hall sender signal

9 Speed signal from speedometer

10 Ground, electronics (MP VIII)

11 Knock sensor 1

12 Positive terminal, Hall sender / throttle

13 Diagnostics L-wire

14 Ground, injection valves (MP IX)

15 not used

16 Injection valve cylinder 3

17 Injection valve cylinder 1

18 Terminal 30

19 Ground, electronics

20 not used

21 Check Engine warning lamp

22 Idle speed positioner, closing winding

23 VarioCam

24 Ground of remaining output stages (MP IX)

25 Hot-wire burnoff

26 Ground, air mass sensor

27 Terminal 15

28 Oxygen sensor/idle CO potentiometer

29 Knock sensor 2

30 Ground NTC/shield knock sensor

31 Knock yes/no

32 Control of AC relay

Printed in Germany – III, 1991

Diagnosis not practicable	Poor hot starting	Engine hesitation	Poor energie power	High fuel consumption	Misfiring	Poor pick-up	Erratic idling	Engine hard to start	Engine will not start	Test point	Engine in perfect running condition Battery charged Starter motor cranks the engine **Terms in bold letters =** Display Fault Memory / Fault Path	Fault Code 1	Test equipment	Plug, control Unit
x		x			x				x	1	**Supply voltage**	11	V	24 → 18 24 → 27
		x	x	x		x	x	x	x	2	**Engine temperature sensor 2**	14	Ω	45 → 30
				x		x	x			3	**Throttle potentiometer**	16	V	
			x			x				4	**Oil temperature sensor**	17	Ω	47 → 30
		x	x		x	x		x	x	5	**Rpm signal**	18	≡	49 → 48
										6	**Speed signal <- Speedometer**	19	≡	9 → 24
		x	x	x	x	x	x	x		7	**Air flow sensor**	21	V Ω	
		x	x	x		x				8	**Oxygen regulation**	23		
		x	x	x		x				9	**Oxygen sensor**	24	V	
										10	**Ignition timing change**	26		
	x						x	x		11	**Opening winding of idle stabilizer**	27	V	
	x						x	x		12	**Closing winding of idle stabilizer**	28	V	
										13	**Activation of AC relay**	29	V Ω	
			x	x		x				14	**Knock sensor 1**	31		
			x	x		x				15	**Knock sensor 2**	32		
			x	x		x				16	**Control unit faulty**	33		

			x	x		x				15	**Knock sensor 2**	32		
			x	x		x				16	**Control unit faulty**	33		
			x	x		x				17	**Hall signal**	34	≅	
			x	x		x				18	**VarioCam**	35	V	
										19	**Idle CO potentiometer**	36		
x								x	x	20	**Control unit faulty**	41		
									x	21	**Fuel pump relay (DME-relay)**	42	V	
	x	x				x	x	x		22	**Tank ventilation relay**	43	V ≅	
										23	**Check Engine warning lamp**	45		
	x	x		x	x	x	x	x		24	**Injection valve cylinder 1**	51	V Ω	
	x	x		x	x	x	x	x		25	**Injection valve cylinder 2**	52	V Ω	
	x	x		x	x	x	x	x		26	**Injection valve cylinder 3**	53	V Ω	
	x	x		x	x	x	x	x		27	**Injection valve cylinder 4**	54	V Ω	
	x	x	x	x	x	x	x	x	x	28	Fuel pressure			
	x	x	x	x	x	x	x	x	x	29	Intake system leaks			
		x			x	x	x	x	x	30	Ground and plug connections			
	x	x	x	x	x	x	x	x	x	31	Ignition system	≅		
		x			x					32	Alternator + Regulator	V		
x										33	Leads K + L	V		

V = Voltmeter Ω = Ohmmeter ≅ = Oscilloscope

33 Tank venting valve

34 Injection valve cylinder 2

35 Injection valve cylinder 4

36 DME relay 85

37 DME relay 87

38 not used

39 not used

40 AC switch input

41 Coolant temperature switch (115°C)

42 Position switch (selector lever)

43 not used

44 Ground, version coding

45 Engine temperature sensor 2

46 not used

47 Oil temperature sensor

48 Speed signal / reference mark

49 Speed signal / reference mark

50 not used

51 Ignition angle cut-in (Tiptronic)

52 Throttle position to transmission control unit

53 Signal from throttle potentiometer

54 Version coding

55 Diagnosis for lead K

Printed in Germany – III, 1991

Fault, Fault Code	Possible Causes, Elimination, Remarks

Test Point 1a

Power supply for
DME control unit (V)

a) Permanent positive (B+) If there is no B+ the fault memory is cleared

Test procedure:

Connect a voltmeter to terminal 24 (–) and terminal 18 (+) of the control unit plug with the help of test leads.

Display: Battery voltage

No display: Check current flow and ground paths in accordance with wiring diagram.

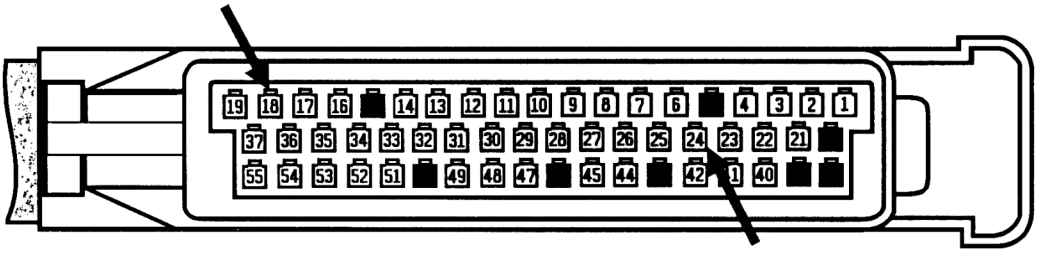

Test point 1b

Power supply of
DME control unit (V)
too high/too low
Fault code 1_11

b) Power supply via terminal 15

Check regulator voltage with the engine running. Specified value approx. 13.8 V
Connect a voltmeter to terminal 24 (–) and terminal 27 (+) of the control unit plug with the help of test leads. Turn on ignition.

Display: Battery voltage

No display: Check current flow according to wiring diagram

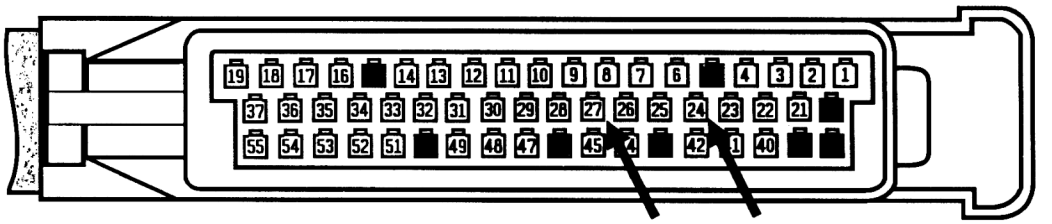

Printed in Germany – III, 1991

Fault, Fault Code	Possible Causes, Elimination, Remarks

Test point 2

Engine temp. sensor
(NTC II/Ω)
Fault code 1_14

Using System Tester 9288, the engine temperature can be read off directly in menu item „Actual values".

no is not plausible display:

Connect ohmmeter to terminal 45 and terminal 30 of the disconnected DME control unit plug with the help of test leads.

Display at:			
	0°C	=	4.4 - 6.8 kΩ
	15 - 30°C	=	1.4 - 3.6 kΩ
	40°C	=	1 - 1.3 kΩ
	80°C	=	250 - 390 Ω
	100°C	=	160 - 210 Ω

If the above values are not obtained, check directly at engine temperature sensor.

Note: Temperature sensor 2 informs the control unit of the engine temperature. It provides additional fuel in the cold starting and warm-up stages of engine operation.

Open circuit (∞ Ω):

The DME control unit of the 968 adjusts to a value pre-set in the control unit that approximately corresponds to that of the engine at operating temperature. Enrichment by the faulty temperature sensor 2 when the engine is warm does not occur (emergency running program). This results in starting problems when the engine is cold (no cold start enrichment).

Short circuit to ground:

When engine is cold: No engine pickup, too lean, engine stops.
No effect if engine is at operating temperature.

Replacement value is applicable to both types of fault!

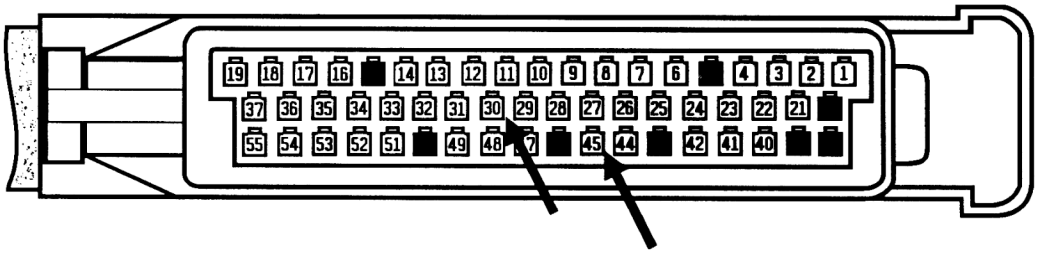

Fault, Fault Code	Possible Causes, Elimination, Remarks

Test point 3

Throttle potentiometer
Fault code 1_16

Using System Tester 9288, the throttle angle may be read directly in the **Actual values** menu item.
If no plausible display is obtained, check power supply
Connect test lead VW 1501 between throttle potentiometer and disconnected plug. Connect voltmeter between lead No. 1 and No. 2.
Ignition on = display: approx. 5 V (Power supply of throttle potentiometer)
No display: Check according to wiring diagram
Connect voltmeter to lead No. 1 and No. 3.
Display approx. 0.5 Volt.
Operate throttle. Voltage should now increase to approx. 4.7 Volt.

Test point 4

Oil temperature sensor
(in cylinder head)
Fault code 1_17

Using System Tester 9288, the oil temperature may be read directly in the **Actual values** menu item. As an alternative, connect an ohmmeter between terminal 47 and terminal 30 of the disconnected DME control unit plug.

Display at: 60°C = 3.8 kΩ
85°C = 1.5 kΩ
100°C = 930 Ω

If the above values are not reached, check directly at oil temperature sensor.
Note: The engine temperature sensor informs the control unit of the actual oil temperature. Changes of the oil temperature cause the VarioCam shift points to be relocated.

Test point 5

Rpm signal
Fault code 1_18

Run test using an oscilloscope. Connect and adjust shop oscilloscope according to manufacturer's instructions.

Connect oscilloscope test lead with terminal 49 and terminal 48 of the disconnected DME control unit plug.

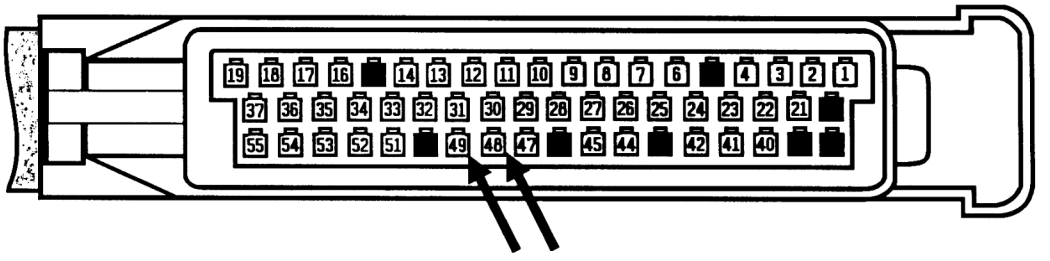

Printed in Germany – III, 1991

Fault, Fault Code	Possible Causes, Elimination, Remarks

Start engine. Sinewave fluctuations of 3 V min. must now be displayed. An intermittently higher amplitude indicates the reference mark signal.

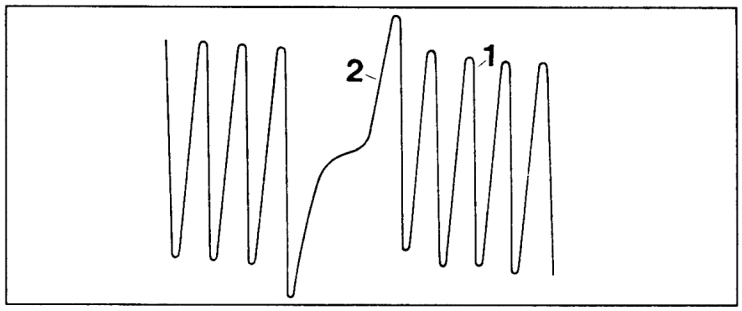

1 – Rpm signal
2 – Reference mark signal

If the voltage signal is too low (< 3V), the gap between sensor and ring gear may be adjusted incorrectly.

Sensor gap: between ring gear and sensor: 0.8 ±0.2 mm.
Using System Tester 9288, the reference mark signal may be read directly in the **Input signals** menu item.

Test point 6

Speed signal/ Speedometer
Fault code 1_19

Using System Tester 9288, the speed signal may be read directly in the Actual values menu item. As an alternative, check with an oscilloscope.
To do so, connect oscilloscope to terminal 9 and terminal 24 of the control unit plug. Turn left front wheel manually.
The following signal must now be displayed:

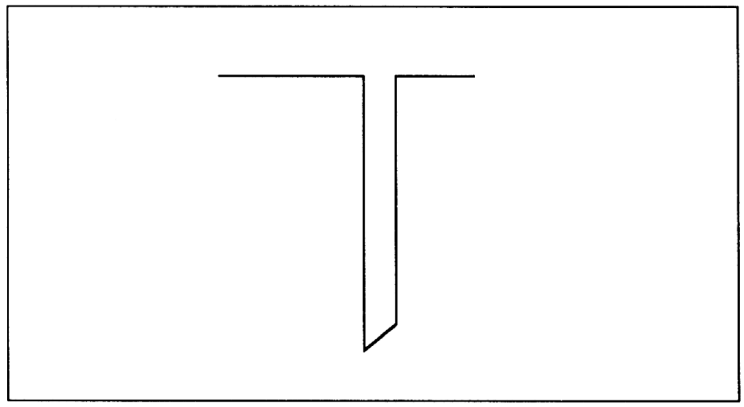

Printed in Germany – III, 1991

Fault, Fault Code	Possible Causes, Elimination, Remarks

Test point 7

Air flow sensor (V/Ω)
Fault code 1_21

Voltage supply (V)

Disconnect plug at air flow sensor, connect voltmeter to plug terminals 2 and 5 using test leads.

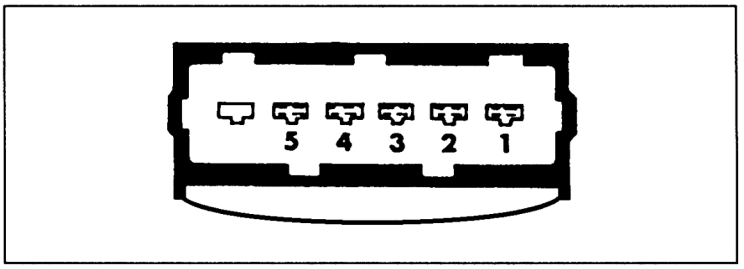

Ignition on:
Display: Voltage approx. 10 Volt up to 13.8 Volt

No display: check in accordance with wiring diagram
Reconnect plug.

Checking the hot-wire signal with System Tester 9288

The air flow sensor signal may be tested directly in the **Actual values** menu item using System Tester 9288.
To check the signal, remove upper air cleaner section and start engine.
Display: approx. 2.5 ±0.5 Volt
Blow against hot wire. This must cause the System Tester display to change.

Printed in Germany – III, 1991

Fault, Fault Code	Possible Causes, Elimination, Remarks

Checking the hot wire signal (V)

Connect plug to air flow sensor.
Pull off DME plug.
Connect DME plug terminal 36 to ground (e.g. door stop).
Connect Voltmeter to DME plug terminal 7 and 26.

Display: ≈ 1.4 V

Blow against air flow sensor and observe voltmeter. A **voltage change** must occur **(~ 1.6 - 5 V)**.

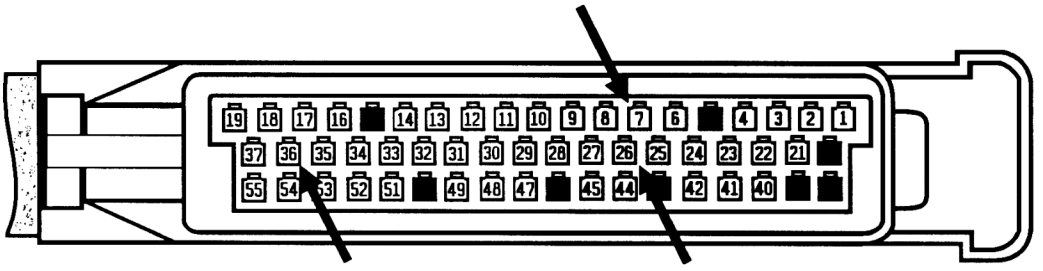

Checking the hot-wire burn-off circuit (visual check)

Operate engine with air flow sensor installed and connected. When an engine temperature > 60° C is reached, increase engine speed to above 2,000 rpm and stop engine (ignition off).
After a waiting time of approx. 4 seconds, the hot wire must glow for approx. 1 second (burn-off).

Test point 8

Oxygen regulation stop
Fault code 1_23

The oxygen regulator cannot operate within its control range if extreme problems of mixture preparation occur, e.g. due to an excessively lean setting because of unmetered air, or due to an excessively rich setting because of a faulty injector valve. The oxygen regulator then moves up to the stop position.

Oxygen regulation stop **too rich:**	Check intake system for leaks (Test point 29)
Oxygen regulation stop **too lean:**	Check fuel pressure (Test point 28) Check injector valves for leaks

Printed in Germany – III, 1991

Fault, Fault Code	Possible Causes, Elimination, Remarks

Test point 9

Oxygen sensor (V)
(Sensor signal)
Fault code 1_24

Checking the sensor signal

Using the System Tester 9288, the oxygen sensor signal may be read directly under the **Actual values** menu item.
Diagnosis can only be carried out if an engine temperature of 70 deg. C has been reached for more than 1 minute.

If not:

Disconnect oxygen sensor plug. Connect digital voltmeter with test connector (sensor voltage signal) and ground at the sensor end.

Start engine and allow to warm up so that the oxygen sensor reaches its operating temperature. When the mixture is enriched, e.g. acceleration, a change in the voltage signal must be displayed.

Voltmeter display:
approx. 150 mV - 900 mV (acc. to mixture composition)
If the regulator sets in with a certain delay, the oxygen sensor heater must be checked. To do so, connect voltmeter at control unit end with sensor plug disconnected and engine running. System voltage must be present.

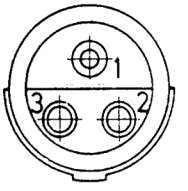

Test connection:

1 = Sensor voltage

2 = Sensor heating

3 = Sensor heating

Note:

If the control unit detects an oxygen sensor voltage signal of more than 1.4 V or less than 0.1 V, the control unit switches to operation without oxygen sensor. (Short to ground or open circuit)

If regulation does not work and the sensor voltage is O.K., check the coding of the control unit before replacing it.

Test point 10

Ignition timing change
Fault code 1_26

Using the System Tester 9288, the ignition timing change signal may be modified directly in the Input signals menu item.
On Tiptronic vehicles, ignition is retarded when a gear change is made. When the Ignition timing change fault message occurs, check wiring continuity between DME plug and Tiptronic connector.
DME control unit plug: Pin 51, Tiptronic control unit plug: Pin 32
Caution, observe connection between plugs.
This fault causes the Tiptronic to operate in emergency mode. For the test to be valid, a test drive is required since the signal is only displayed for a very short time.

Printed in Germany – III, 1991

Fault, Fault Code	Possible Causes, Elimination, Remarks

Test points 11 and 12

Idle stabilizer (V)
Fault code 1_27
1_28

The idle stabilizer is designed as a twin-winding actuator with one opening winding and one closing winding.

Using the System Tester 9288, actuation of the idle stabilizer may be read directly in the Drive links menu item.

If no higher pulse is present, check the following:

Voltage supply

Connect voltmeter with disconnected plug of idle stabilizer terminal 2 and engine ground. Ignition on.

Display: Battery voltage

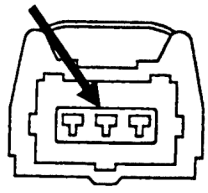

No display:
Check power supply in accordance with wiring diagram.

Checking the control signal

Using the System Tester 9288, the idle stabilizer signal may be read directly in the **Actual values** menu item.
Operational check: Switch on loads in idle mode. % display must change, idle speed remains constant. If not:

Connect 3-pin adapter lead VW 1501 between idle stabilizer and plug port.

Connect oscilloscope to the adapter lead terminal 2 and terminal 1 as well as terminal 2 and terminal 3, respectively.

Make sure the wiring connectors are not shorted to vehicle ground (to avoid short circuits).

With the engine running, the following display must appear:

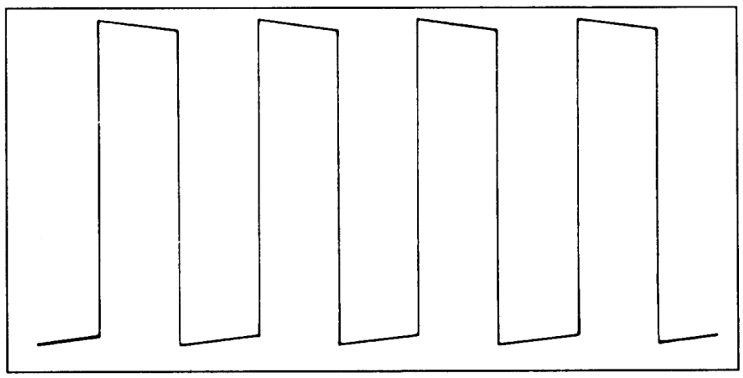

If no audible pulse is detected even though voltage is present and a signal is applied, replace the idle stabilizer.

Printed in Germany – III, 1991

Fault, Fault Code	Possible Causes, Elimination, Remarks

Test point 13

Activation of AC relay
Fault code 1_29

Using the System Tester 9288, activation of the AC relay may be checked directly in the **Drive links** menu item.
If no sound is audible, check the following:
1) AC switch signal:

DME plug disconnected, ignition on, connect voltmeter between terminal 40 and terminal 24.
AC switch on: Display approx. 12 Volt
If not: Check in accordance with wiring diagram
If the air conditioning system is inoperative, the fault may be due to the 115° C coolant temperature switch. To check the switch, connect ohmmeter with terminal 41 of the disconnected control unit plug and ground. Ignition on.
Display: $\infty\Omega$
If not, check in accordance with wiring diagram

2) Voltage at A/C relay:

Connect DME plug. Remove A/C relay (G19) from Central Electrical System. Connect voltmeter with relay base terminal 2 and terminal 7. Operate A/C switch with engine running.
Display: Battery voltage after approx. 5 seconds
No display: Check wiring between A/C relay and DME control unit.

Test point 14

Knock sensor 1
Fault code 1_31

- Mounting of knock sensor (observe torque and type of screw)
- Check wiring harness and plug connection in accordance with wiring diagram
- Reconnecting the plugs helps to eliminate contact resistances
- Check if coolant or other fluids have ingressed in the knock sensor area
- Replace knock sensor

If the knock sensor is faulty, ignition timing is retarded by 6° on the crankshaft at a certain engine load.

Printed in Germany – III, 1991

Fault, Fault Code	Possible Causes, Elimination, Remarks

Test point 15

Knock sensor II

Fault code 1_32

- Mounting of knock sensor (observe torque and type of screw)
- Check wiring harness and plug connections in accordance with wiring diagrams
- Reconnecting the sensors helps to eliminate contact resistances
- Check if coolant or other fluids have ingressed in the knock sensor area
- Replace knock sensor

If the knock sensor is faulty, ignition timing is retarded by 6° on the crankshaft

Test point 16

Control unit faulty

(Knock computer)

Fault code 1_33

Ignition timing is retarded by 6° on the crankshaft for all cylinders from a certain engine load if this fault occurs.

Replace control unit.

Test point 17

Hall signal

Fault code 1_34

To check the Hall signal, disconnect plug at the cylinder head behind the camshaft sprocket and insert 3-pin adapter lead (VW 1501). Connect oscilloscope to terminals 1 and 2 of the adapter lead, start engine.

If the Hall system is O.K., the following signal must be displayed:

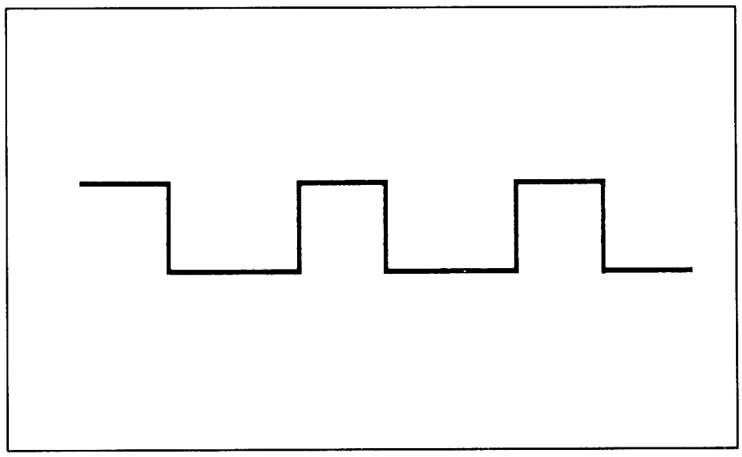

Printed in Germany – III, 1991

Fault, Fault Code	Possible Causes, Elimination, Remarks
	If the DME control unit detects a missing Hall signal, ignition timing is retarded by approx. 6° in all rpm ranges.
Test point 18 **VarioCam** Fault code 1_35	Using the System Tester 9288, VarioCam may be checked directly in the **Drive links** menu item or the **Drive link active** test point. A switching noise must be audible in case of the Drive links test point. For the Drive link active menu item, the entire system is checked with the engine running. With this test, there is a risk of the engine stalling due to valve overlap. This causes communication to the System Tester 9288 to be interrupted. To be able to continue the diagnosis, switch the ignition off and back on again. Then press the ">" key on the System Tester. If VarioCam is not triggered, disconnect plug at the solenoid. Switch ignition on. Connect voltmeter to plug (refer to drawing) and ground (engine). 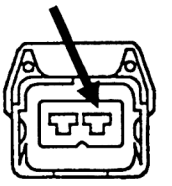 Display: Battery voltage No display: Check wiring according to wiring diagram
Test point 19 **Idle CO potentiometer** Fault code 1_36	On vehicles without catalytic converter that show fault code 36, start by testing the control unit coding (Actual values menu item with System Tester 9288). If the coding is O.K., check power supply for CO potentiometer and potentiometer signal in accordance with the wiring diagram.
Test point 20 **Control unit faulty** Fault code 1_41	Using the System Tester 9288, the version coding may be read directly in the **Actual values** menu item. If this fault is detected by the control unit, maximum engine speed is limited to 6,000 rpm 6 minutes after starting the engine. This is done to protect the engine.

Printed in Germany – III, 1991

Fault, Fault Code	Possible Causes, Elimination, Remarks

Test point 21

Fuel pump relay
(DME relay) (V)
Fault code 1_42

Start engine - the fuel pump must operate during engine starting.

If not:

Switch off ignition. Disconnect control unit plug. Use a test lead to connect terminal 36 and terminal 24 of the control unit plug. Using an additional test lead, connect terminal 3 of DME plug to ground (e.g. door stop). The pump must run.

If not:

Check in accordance with wiring diagram

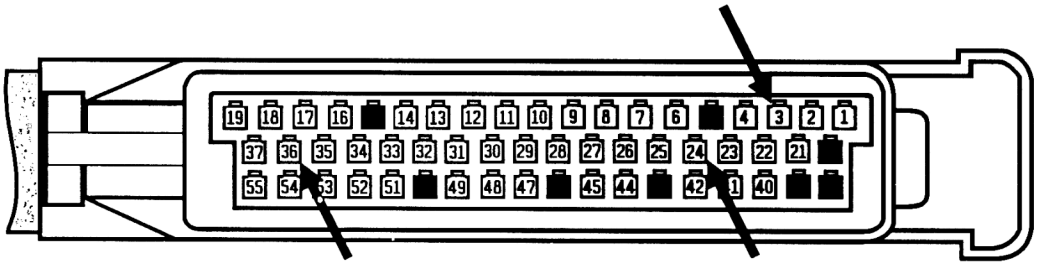

Test point 22

Tank ventilation valve (V)
Fault code 1_43

When the engine operates at operating temperature, the tank ventilation valve (at the brake booster) is opened for a longer or shorter period as a function of the load. The opening period is determined by a ground pulse from the control unit.

a) Activation test

To activate the tank ventilation valve directly, System 9288 may be used, selecting the Drive links menu item. If there is no audible pulse from the tank venting valve, check voltage supply at the terminal — refer to drawing — of the tank ventilation valve plug and body ground according to the wiring diagram.
Ignition on. Display: Battery voltage

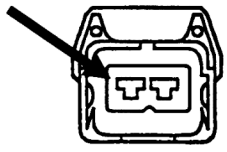

b) Control signal test

Connect DME test lead (Bosch No. 1 684 463 093) between tank ventilation valve and plug connection. Connect and adjust engine tester according to manufacturer's instructions.

Printed in Germany – III, 1991

Fault, Fault Code	Possible Causes, Elimination, Remarks

The tank ventilation valve is not activated permanently.

Testing must be performed within 7 minutes after starting the engine at operating temperature. Then interrupt activation of ventilation valve for approx. 75 seconds, continue afterwards.

Start engine and accelerate. With the engine at operating temperature, the following display must be visible on the tester:

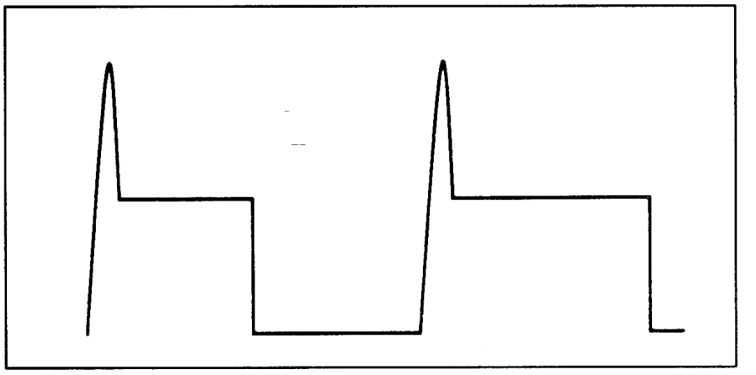

The signal becomes wider as the air throughput increases.

If there is no signal, check path in accordance with wiring diagram

Test point 23

Check Engine warning lamp
Fault code 1_45

A ground signal is fed from the control unit – terminal 21 – to the „Check Engine lamp", causing this lamp to come on when an emission control component fails.

If the „Check Engine" warning lamp fails, this fault is stored in the fault memory.

Check by supplying ground to disconnected DME control unit plug terminal 21 and switching on ignition. The Check Engine lamp must now come on.

To replace a faulty display lamp, always use the specified lamp.

Reading errors using the Check Engine warning lamp is covered on page D24/28 - 31.

Printed in Germany – III, 1991

Fault, Fault Code	Possible Causes, Elimination, Remarks

Test point 24 - 27

Injector valves (V/Ω)
Fault code 1_51
1_54

Using the System Tester 9288, the injector valves may be checked directly in the **Drive links** menu item or the **Drive link active** menu item.

Selective injection allows each injector valve to be actuated individually. In case of the Drive links test point, a rather weak switching noise of the injector valves is audible.
In case of the Drive link active menu item, each individual injector valve may be isolated with the engine running.

Power supply

Disconnect valve plug, connect voltmeter to the injector valve plug terminal – refer to drawing – and ground (engine).
Ignition on.

Display: Battery voltage

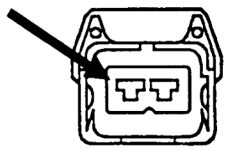

If no battery voltage is displayed, check according to wiring diagram.

Checking coil resistance of injector valves

Disconnect valve plug. Check coil resistance at injector valve terminal contacts with an ohmmeter.

Test value: approx. 16 Ω

Injection output stage

Adjust oscilloscope according to manufacturer's instructions. Connect a Bosch test lead (1 684 463 093) between injector valve and plug. Connect oscilloscope according to manufacturer's instructions with the test lead.

Caution:

Make sure the tester leads are not grounded in any way.

Printed in Germany – III, 1991

Fault, Fault Code	Possible Causes, Elimination, Remarks

Start engine. If the injection output stage operates correctly or if the tester connections are correct, respectively, the following signal must be displayed:

ti signal

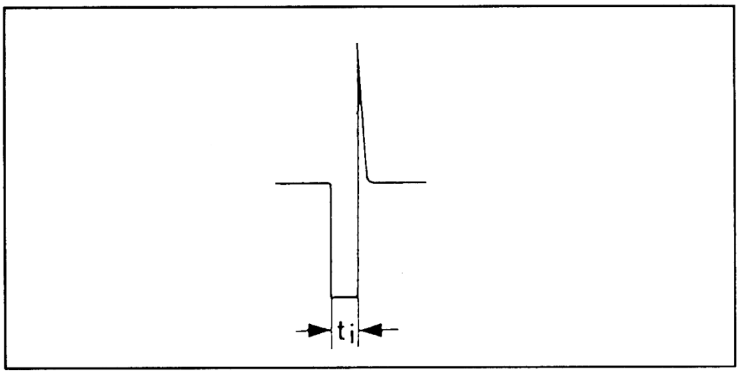

Printed in Germany – III, 1991

Fault, Fault Code	Possible Causes, Elimination, Remarks

Test point 28

Fuel pressure

The left-hand fuel collection pipe has a test connection at cyl. no. 3. Unscrew the cap nut of the test connection.

Caution: The inserted ball seat could fall out!

Connect pressure gauge P 378 or VW 1318 to the test connection. Start engine.

Test pressure 3.3 ±0.2 bar (Idle speed)

In case of hot starting problems:

Check with engine stopped and fuel pump running. For the test, remove fuel pump relay and jumper terminal 87b and terminal 30.

Test pressure 3.8 ±0.2 bar

- Switch off fuel pump. Read off pressure on pressure gauge (nominal 3.8 ±0.2 bar).
- Max. permissible pressure drop with warm engine: **0.5 bar in 30 minutes.**
- If the pressure drops below the specified value, proceed as described below:

Printed in Germany – III, 1991

Fault, Fault Code **Possible Causes, Elimination, Remarks**

Build up pressure again by switching on the fuel pump briefly.
Remove return pipe from pressure regulator (fuel pump must not be switched on).

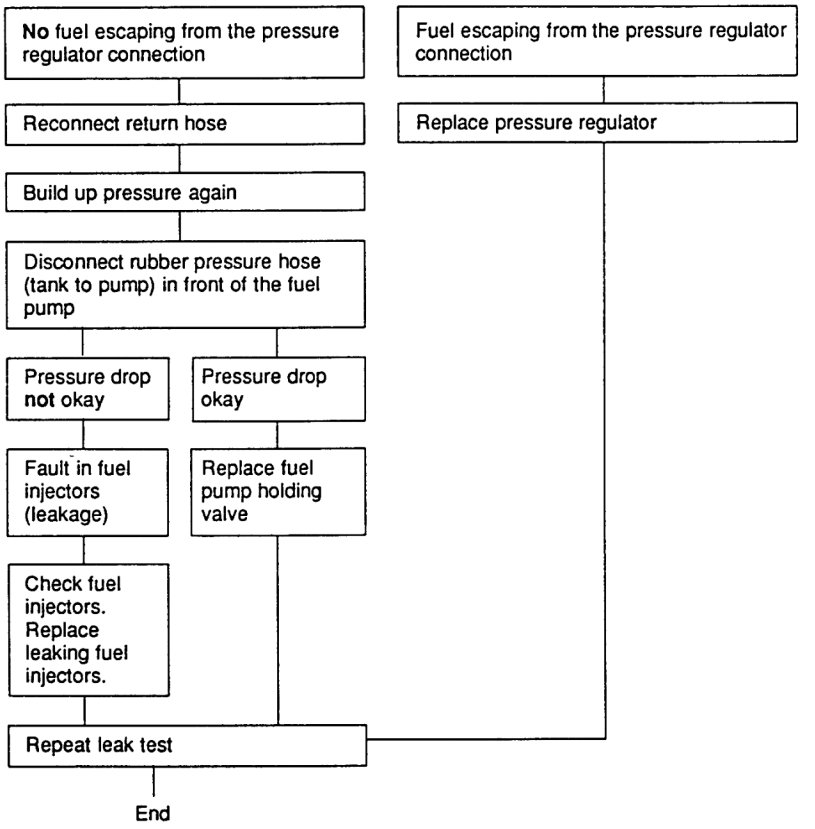

Printed in Germany – III, 1991

Test point 29

Intake System Leaks

Check all connections downstream of the air flow sensor for leaks. Remove upper air cleaner section. Attach Special Tool 9264/4 to the air mass sensor and build up a positive pressure of approx. 0.5 bar in the intake system. Leaks will cause the pressure in the intake system to drop quickly.

Note:

Fault flashing code 1_23 (oxygen regulator at stop) appears in cars with oxygen regulation and very large leaks in the intake system (e.g. intake pipe gasket).

Test point 30

Ground connection/plug connections (V)

- Ground lead (2x) from wiring harness to engine block.
- Battery ground lead at clutch bell housing (engine ground) and body (body ground, next to battery).
- Fuel pump ground between rear lock crosswall and spare wheel well.
- Are ground connections tight and free from corrosion?
  If not, undo, clean and retighten ground connections as specified.

Note:

Never start the engine as long as the ground lead between body and engine is disconnected!
This will destroy the control unit immediately!

Printed in Germany - III, 1991

Plug connections

Are all plugs connected correctly, not loose and not corroded? The pins and sleeves of the plugs must not be bent!

- The 55-pin plug on the DME control unit (behind the floor plate in the passenger footwell)
- A 14-pin plug in the engine compartment next to the brake booster
- A 3-pin plug for reference mark/engine speed sensor and a 3-pin plug for the oxygen sensor behind intake pipe for cylinder no. 4 (remove cover at fuel ring pipe first)
- A 3-pin plug at throttle potentiometer
- A 2-pin plug at tank ventilation solenoid valve (at the brake booster)
- A 6-pin plug at the air mass sensor
- A 2-pin plug at NTC II (The temperature sensor is screwed into the engine block above the left-hand balance shaft near cylinder no. 1)
- A 3-pin Hall sender plug (behind the camshaft drive gear)
- A 2-pin plug for knock sensor I (between intake pipe for cylinder no. 1 and 2)
- A 2-pin plug for knock sensor II (between intake pipe for cylinder 3 and 4)
- A 3-pin plug for the idle stabilizer
- One 2-pin plug for each of the 4 injection valves

The 968 is fitted with a standard control unit. The control unit is coded accordingly depending on the vehicle model.

The type of coding may be retrieved under the Version coding heading in the Actual values menu.

Power to the DME control unit is supplied across ignition lock terminal 15 and terminal 30.

Printed in Germany – III, 1991

Test point 31

Ignition system

a) Secondary ignition display

Adjust secondary ignition display at oscilloscope. Connect test leads according to manufacturer's instructions.

Note:

If a fault is displayed for all cylinders, the fault is located in the primary or secondary circuit from the ignition coil to the distributor rotor. If a fault is displayed for one cylinder only, the fault is located after the distributor rotor.

Primary resistor:
Terminal 1 + 15 = 0.4 - 0.6 Ω

Secondary resistor:
Terminal 1 + 4 = 5 - 7.2 kΩ

b) Spark plug connector (Ω)

Suppression resistor: 3 kΩ
Visual inspection for damage, traces of burning etc.

c) Distributor

Distributor rotor, distributor cap:
Suppression resistor: 1 kΩ each

Visual inspection for damage, dirt, faulty mounting position.

d) Ignition timing test

Ignition timing is tested with the engine at operating temperature:

Using System Tester 9288, ignition timing and engine speed can be read directly in the „Actual values" menu item.

Test values: 968 (with manual transmission)

At 840 ± 40 rpm ...10° ± 3°

968 (with Tiptronic)

At 880 ± 40 rpm ... 10° ± 3°

Printed in Germany – III, 1991

Test point 32

Alternator, regulator

Engine misfire may be caused by voltage peaks of the alternator.

Take drive belt off the alternator, start engine.

Check alternator and regulator after having remedied the faults.

Test point 33

Leads K and L

The diagnosis connection between the DME control unit and testers is established by means of the two leads K and L. If no diagnosis is possible, the following points must be checked:

1. Continuity test (refer to wiring diagram)

Leads L: Pin 7 (19-pin diagnostic socket)
– Pin 13 (DME plug)

Leads K: Pin 8 (19-pin diagnostic socket)
– Pin 55 (DME plug)

2. Ground short test (refer to wiring diagram)

Leads L: The voltage at pin 7 (19-pin diagnostic socket) must be > 8 V when the ignition is on.

Lead K: The voltage at pin 8 (19-pin diagnostic socket) must be > 8 V when the ignition is on

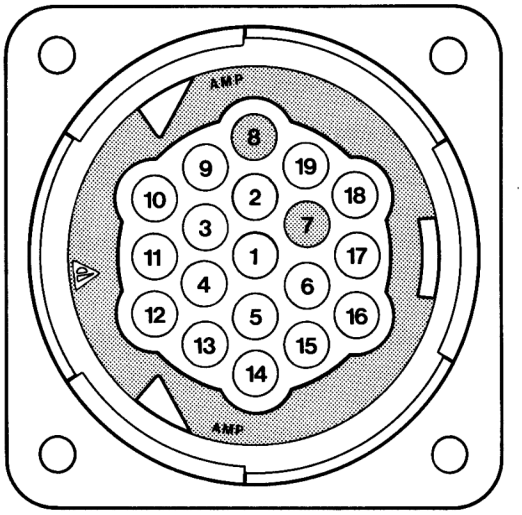

951 - 24/28

Assignments:

7 - Lead L
8 - Lead K
10 - Ground
13 - Terminal 15

Possible fault cause at < 8 Volt:

- Short to ground or open circuit in wiring or connectors

- A defective control unit connected to the above leads. (May be any diagnosable control unit, need not necessarily be the DME control unit).

Checking: Disconnect plugs at diagnosable control units one after the other until the voltage is > 8 V. Replace responsible control unit.

- Tester faulty.

- No power supply at the diagnostic plug.

- No ground supply at diagnostic plug.

Printed in Germany – III, 1991

Notes on idling speed and idling CO testing:

a) Idling speed

Idle speed check value for engines at operating temperature:
840 ± 40 rpm with manual transmission
880 ± 40 rpm with Tiptronic

b) Idle speed CO of cars without catalytic converter

The CO level is adjusted at the idle potentiometer in the engine compartment. The following requirements must be observed:

- Engine at operating temperature
- Engine in good mechanical condition, ignition o.k.
- All loads switched off
- CO tester at operating temperature, calibrated and adjusted correctly

Adjusting value: 0.5 - 1.5 % CO

c) Idle speed CO of cars with catalytic converter

On these vehicles, adaptation of idle speed CO level takes place along with adaptation of the idle speed. As a result, only the actual condition can be checked on those vehicles. The following requirements must be observed when performing the checks:

- Engine at operating temperature
- Engine in good mechanical condition, ignition o.k.
- All loads disconnected
- Exhaust tester at operating temperature, calibrated and adjusted correctly
- **Oxygen sensor plug connected**

Test value: 0.4 - 1.2 % CO

After disconnecting the control unit plug or the battery, the engine must run at idle for at least 10 minutes before these values can be rechecked.

Coding the control unit

The DME control unit is coded using a jumper connection deviating from the control unit wiring loom. If the jumper connection is free, the control unit operates in controlled mode, i.e. with oxygen sensor regulation. If a 1 kΩ resistor is attached to the jumper, the control unit operates in uncontrolled mode, i.e. without oxygen sensor regulation.

The coding may also be read directly in the "Actual values" menu item using System Tester 9288.

Printed in Germany – III, 1991

Check-Engine Lamp

(Malfunction Indicator Light M.I.L.)

USA vehicles are fitted with with a warning lamp that lights up if a component relevant to exhaust gas composition fails.

As a function check of the warning lamp, the lamp lights up when the ignition is switched on and goes out when the engine is running after it has been started without depressing the accelerator.

A flashing code of the warning lamp indicates the defective fault path.

To trigger the flashing code, fully depress the accelerator pedal for 3 seconds with the engine off and the ignition on until the Check-Engine lamp flashes. Then ease off the throttle.

If no fault is stored, i.e. no warning came from the warning lamp, a flashing code appears



15
no fault.

• = Lamp on O = Lamp off

If the warning lamp did indicate a warning, i.e. there is a fault, a flashing code appears, e.g.

1 1 2 4

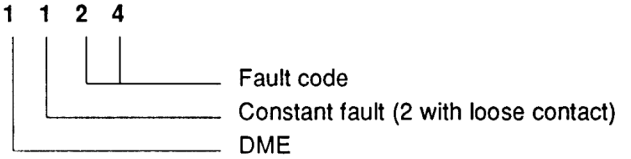

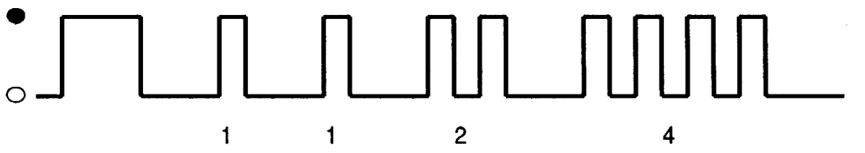

1124
Oxygen sensor

The flashing code is listed in the Diagnosing/Troubleshooting plan on page D 24/28-8.
The fault can also be read directly using System Tester 9288. After the repair the fault memory must be erased using the **System Tester**.

If the fault memory is read via the Check-Engine lamp, repairs may be performed using conventional shop equipment.

Printed in Germany – III, 1991

The Repair Manual 968, Vol. II, „Transmission", covers manual and Tiptronic transmissions. The description of Tiptronic transmission repairs is found after the section covering the manual transmission.

General

Technical data . . . . . 30 - 01

Clutch, operation

Identification of clutch pressure plates . . . . . 40 - 4a
Removing and installing clutch . . . . . 30 - 1
Adjusting the clutch pedal . . . . . 30 - 5

Manual Transmission, Operation, Housing

Removing and installing transmission . . . . . 34 - 1
Adjusting gearshift . . . . . 34 - 2a
Removing and installing gear set . . . . . 34 - 3
Removing and installing drive shaft seal if transm. has not been dismantled . . . . . 34 - 7
Removing and installing 5th and 6th gear . . . . . 34 - 9
Determining snap rings for tapered roller bearing and 6th gear gearwheel . . . . . 34 - 17
Removing and installing drive pinion and drive shaft . . . . . 34 - 19
Dismantling and assembling end cover . . . . . 34 - 23
Recalculating adjusting shim „S4" . . . . . 34 - 29
Dismantling and assembling end shield . . . . . 34 - 31
Dismantling and assembling transmission housing . . . . . 34 - 37

Manual Transmission, Gears, Shafts

Dismantling and assembling drive shaft . . . . . 35 - 1
Dismantling and assembling drive pinion . . . . . 35 - 7

Differential / Transaxle System

Removing and installing differential . . . . . 39 - 1
Dismantling and assembling differential . . . . . 39 - 5
Adjusting drive set . . . . . 39 - 11

Printed in Germany – XI, 1994

Technical data

6-speed manual transmission G 44

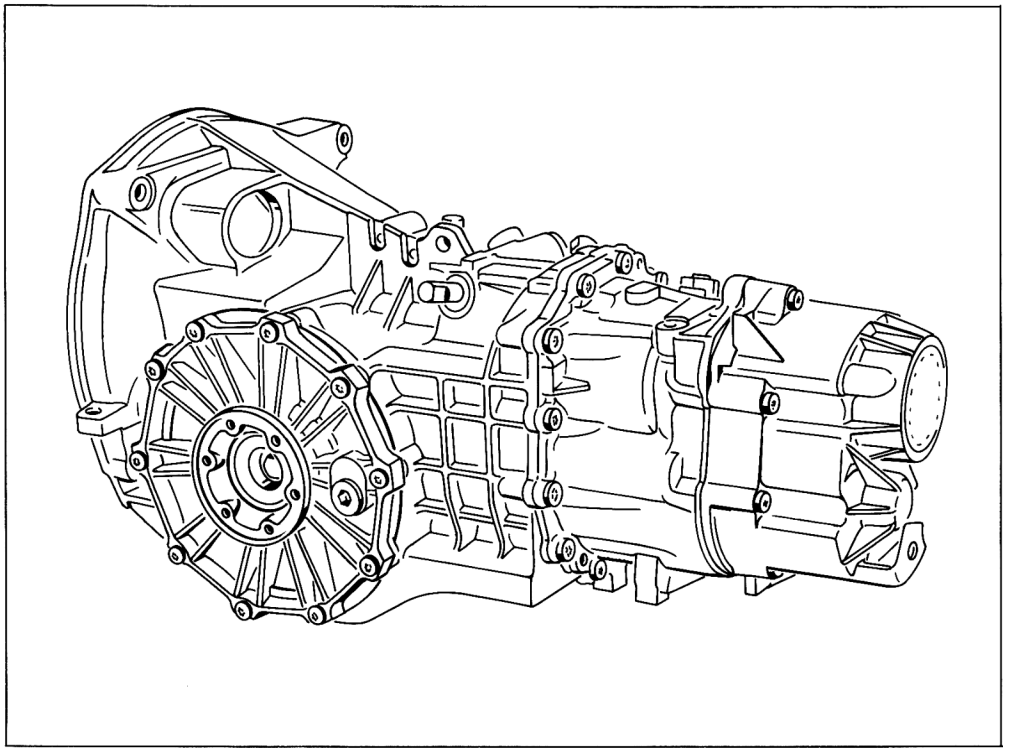

Model	Code letter	Equipment	Installed in:	Model year
G 44/00		6-speed	968 worldwide	'92

Printed in Germany – V, 1992

Technical data

General data	Manual transmission G 44
Transmission ratios $Z_2 : Z_1 = i$	
1st gear	35 : 11 = 3.182
2nd gear	38 : 19 = 2.000
3rd gear	33 : 23 = 1.435
4th gear	30 : 27 = 1.111
5th gear	31 : 34 = 0.912
6th gear	28 : 36 = 0.778
Reverse	38 : 11 = 3,455
Final drive	Hypoid bevel-gear drive with 12 mm offset
Transmission ratio Final drive	34 : 9 = 3.778
Filling capacity	approx. 2.75 liter hypoid oil SAE 75 W 90 or API classification GL5 (or MIL-L 2105 B)

Printed in Germany – V, 1992

Technical Data

Tightening torques for manual transmission G 44

Location	Thread	Tightening torque Nm (ftlb.)
Selector shaft cover to transmission housing	M 8	25 (18)
Lock bolts to transmission housing and end shield	M 24 x 1.5	70 (52)
Reverse light switch to cover	12 x 1.5	20 (15)
End shield to transmission housing	M 8	25 (18)
Drive shaft four-point bearing	M 17 x 1	150 (111)
End cover to end shield	M 8	25 (18)
Retainer plate to end shield	M 8 (with collar)	25 (18)
Deflection lever for reverse gear to end shield	M 14 x 1.5	35 (26)
Oil filler and oil drain plug	M 22 x 1.5	35 (26)
Threaded flange for guide plate to transmission housing	M 6	10 (7) (with Loctite 271)
Side transmission cover to transmission housing	M 8	25 (18)
Halfshaft flange to differential	M 10	44 (32)
Crown wheel to differential housing (Verbus-Ripp bolt)	M 12 x 1.25	200 (148)

Printed in Germany – VIII, 1993

Removing and Installing Clutch

Removal

1. Disconnect battery ground cable.

2. Remove full set of power unit undertray panels.

3. Disconnect oxygen sensor connector and pull cable downwards.

4. Remove exhaust mainfold complete with catalytic converter.

5. Undo starter mounting bolts, remove heat shield and move starter to the side.

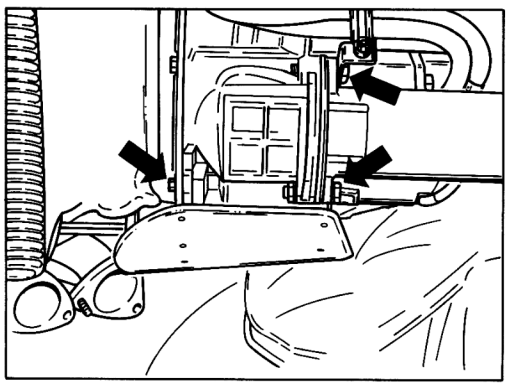

830-30

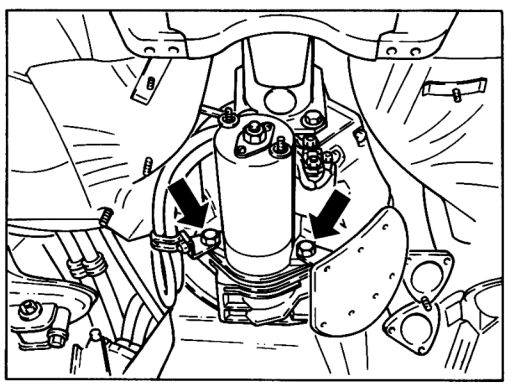

831-30

6. Unbolt clutch slave cylinder and hang to one side, the line remaining connected. Attach note in interior of vehicle: "Do not operate clutch pedal".

7. Remove cover of clutch housing.

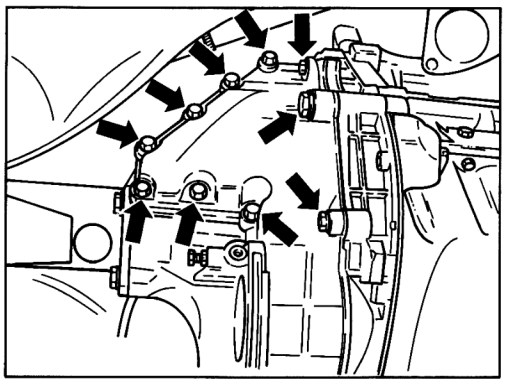

832-30

8. Pull out release lever shaft using an M8 bolt after having undone the lock bolt.

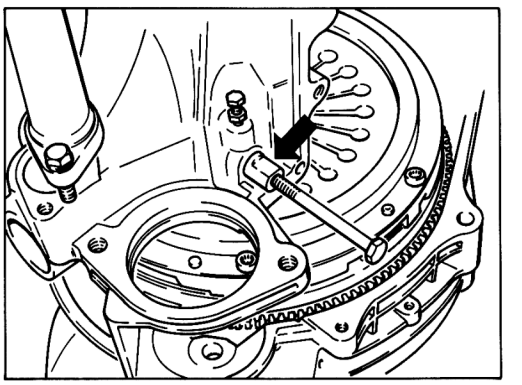

833-30

Printed in Germany – II, 1991

9. Release socket head bolt of clamping sleeve and push back clamping sleeve complete with central shaft I.

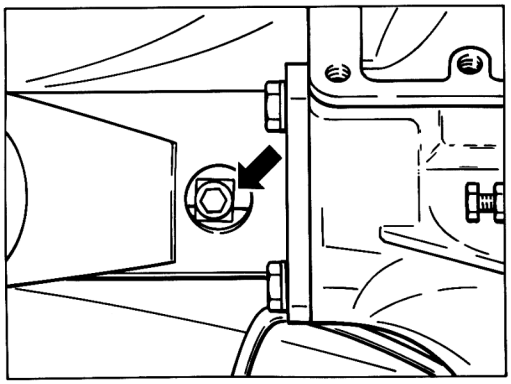

834-30

10. Remove hexagon head bolts (M 6) for guide tube and push guide tube towards thrust plate.

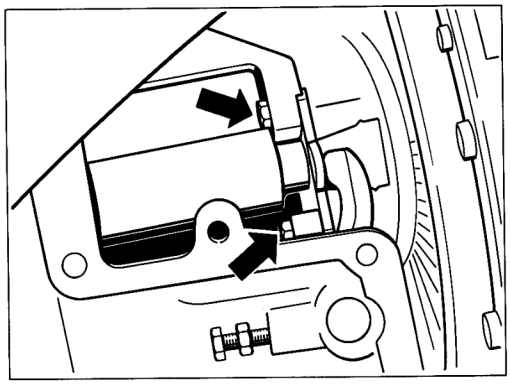

835-30

11. Mark installation position of thrust plate and flywheel for reassembly.

12. Release multi-tooth bolts of clutch thrust plate evenly and take out thrust plate together with guide tube and clutch drive plate.

Installation

Grease all sliding surfaces for clutch release as well as central shaft teeth with Olista Longtime 3 EP.

1. Before fitting the complete clutch assembly (drive plate, thrust plate and guide tube), align release bearing and guide tube with regard to each other. Note hole pattern of thrust plate to flywheel.

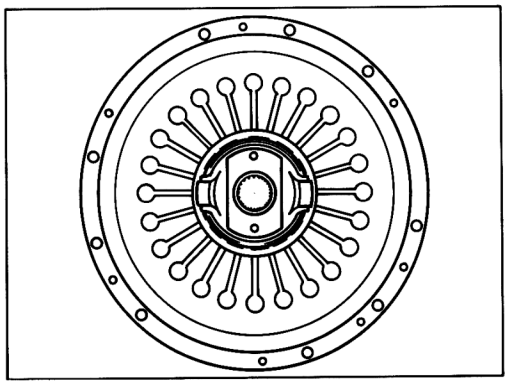

836-30

Note

Insert release fork into clutch housing before installing the clutch assembly (installation of fork is not possible afterwards).

2. Put clutch assembly in place and screw in multi-tooth bolts of thrust plate manually.

3. Push central shaft I in forward direction, centering the drive plate at the same time.

Printed in Germany – II, 1991

Note

A groove is machined in central shaft I to allow a screwdriver to be used to push the shaft forward.

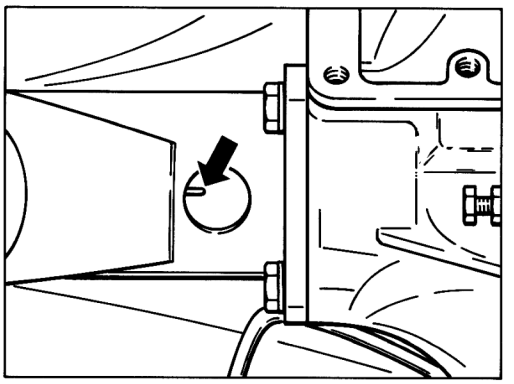

837-30

4. Determine center position of clamping sleeve relative to central shaft II and tighten socket head bolt to 80 Nm (59 ftlb).

5. Tighten mounting screws of thrust plate evenly. Tightening torque 23 Nm (17 ftlb).

6. Tighten guide tube. Check for correct seating. Tightening torque 10 Nm (7 ftlb).

7. Engage release fork. Relocate release lever until needle sleeve and bore in the clutch housing line up. Push in release lever shaft to stop, making sure it is positioned correctly (milled surface pointing towards the mounting bolt). If required, mover release lever to and fro to facilitate alignment. Do not use force to achieve correct alignment.

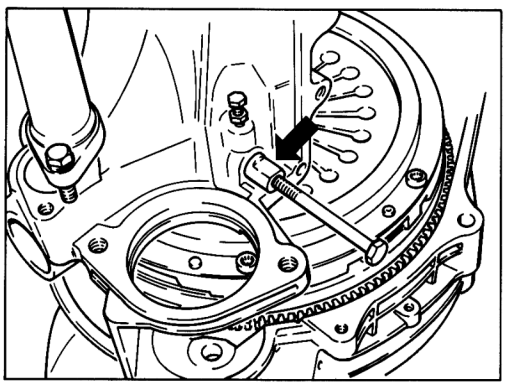

833 - 30

Printed in Germany – II, 1991

Identification of clutch pressure plates

To avoid confusion, the pressure plates are color-marked for positive identification.

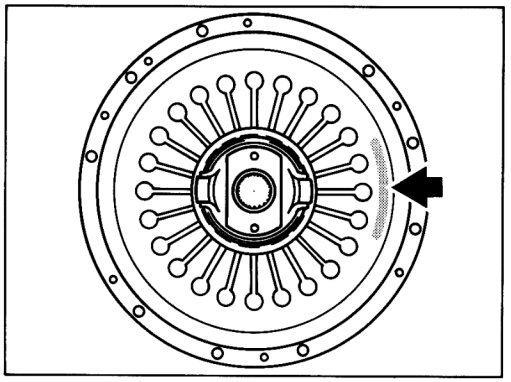

836-30

Color marking:

968	Green
911 Carrera 2/4	Blue
911 Carrera (993)	No mark
911 Turbo 3.6	Red

Printed in Germany – XI, 1994

Adjusting the clutch pedal

Note

The following items are essential requirements for smooth clutch operation and must therefore be observed whenever the pedal is adjusted:

- Correct bleeding of clutch hydraulics.
- Tightness of hydraulic system.
- Correct setting of pushrod and boost spring.
- Pedal position according to standard setting.

Checking and adjustment procedures

1. **Adjusting pedal position/pushrod (dimension A = LHD: 147 mm / RHD: 109.5 mm).**
   If repairs on the master cylinder have been carried out, the pushrod must be readjusted. Move the sound insulation in this area out of the way. The correct pedal pos. is obtained automatically after the pushrod has been set **to dimension A** (measured between body and rod center). This dimension is set by turning the hexagon head pushrod and by locking with the hex nut.
   If required, correct the cruise control switch position on vehicles equipped with cruise control.

2. **Adjusting the boost spring (dimension B = 65 mm) / or 68* mm).**
   The boost spring can be set to dimension B = **65 mm ± 1 or 68* mm ± 1 mm** only after the pedal position has been checked and adjusted. Measure the dimension between the outer edge of the washer and the
   cutter support (refer to diagram).
   If the parts have been **dismantled** or when ordering spare parts, dimension B is **76 mm ± 1. or 78* mm ± 1 mm**. In this case, the boost spring is secured with a cotter pin (2 mm dia.).

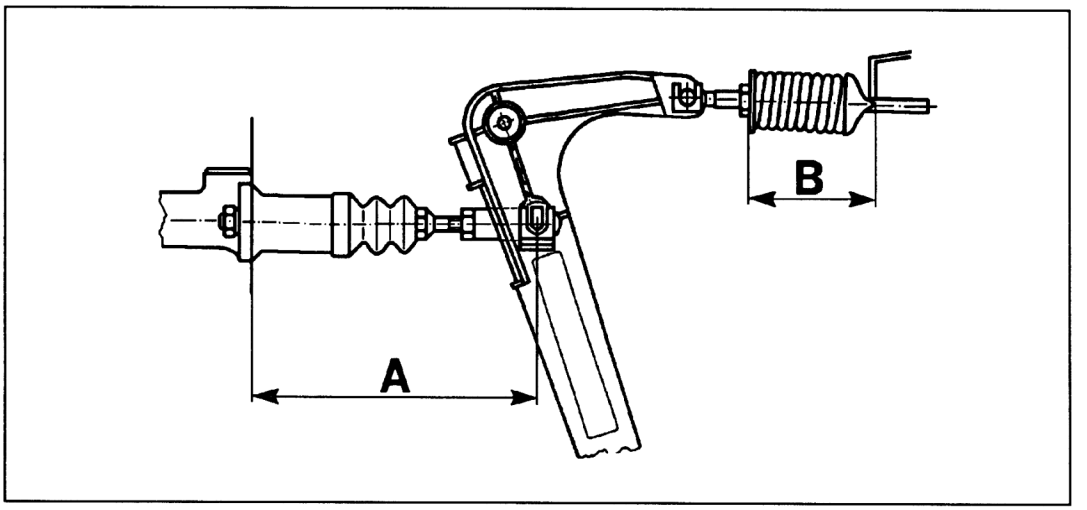

* New boost spring fitted as of April, 1993 (grey color)

112-30

Printed in Germany – XI, 1994

3. Clutch free play.

The free play cannot be adjusted.

The clutch master cylinder is provided with an internal stop. If the boost spring and the pushrod are adjusted correctly, the clutch pedal is always forced against this stop. Pull the pedal back to check if this stop (= end position) is reached.

Due to the fact that any free play is automatically taken up hydraulically, the free play of the clutch **cannot** be checked at the clutch pedal.

Printed in Germany – XI, 1994

Removing and installing transmission, Model G 44

Removal

1. Undo drive shafts at transmission end and suspend horizontally on vehicle.

2. Disconnect connector for reverse light switch.

3. Push shift rod bellows to the rear and unscrew clamping screw. Disconnect shift rod from intermediate lever.

4. Unscrew pan head screws of clamping sleeve across inspection holes and push clamping sleeve towards transmission.

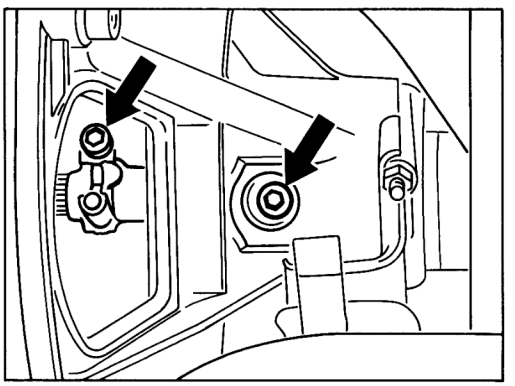

1135-34

Note

To fit the pan head screw into the central tube housing, use an extension with swivel joint (16° angle).
Order No. SXW 10

Supplier's address:
Snap-on Tools GmbH
Rudolph Diesel Strasse 6
D-7104 Obersulm-Willsbach
Phone 07134/3054

or any other Snap-on distributor worldwide.

5. Locate transmission complete with central tube in installation position, placing a suitable wooden block between the crosstube and the central tube.

6. Place a general-purpose transmission jack below the transmission and secure with a retaining strap.

7. Remove fastening bolts for transmission mounting.

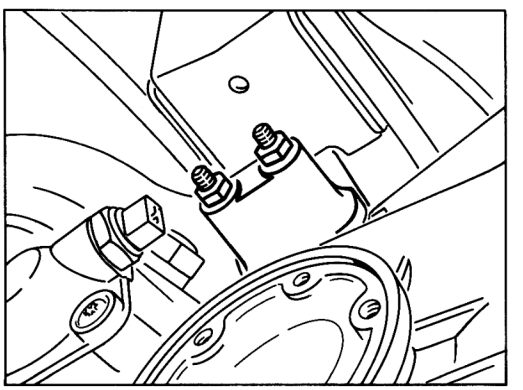

1134-34

8. Remove transmission/central tube fastening bolts.

9. Pull transmission to the rear and lower carefully towards bottom.

Printed in Germany - V, 1992

Installation

1. Fit transmission with general-purpose transmission jack.

2. Engage transmission and fit flange bolts. Tighten all fastening bolts to the specified torque.

3. Retain transmission in installation position and fit transmission mount.

4. Fit connectors for reverse light switch, shift rod and drive shafts.

Tightening torques:

Transmission to central tube	M 12	85 Nm (63 ftlb)
	M 10	42 Nm (31 ftlb)
Shift rod	M 8	21 Nm (15 ftlb)
Mounting bracket to transmission	M 8	23 Nm (17 ftlb)
Drive shafts	M 8	42 Nm (31 ftlb)

Order of assembly of the clamping sleeve:

Start by fitting one bolt each on left and right-hand side and tightening to 10 ±5 Nm (7 ±4 ftlb). Fit opposite bolts and tighten to 80 Nm (59 ftlb). Re-tighten the bolts fitted initially to 80 Nm (59 ftlb).

Printed in Germany - V, 1992

Adjusting gearshift

1. Set manual shift lever (No. 3) to idle position. The transverse selector shaft is now in the 3rd and 4th gear shift plane.

   With the gearshift mechanism adjusted correctly, the shift lever (No. 3) is not inclined in transverse direction.

   Adjusting shift lever position:
   Undo lock nuts (No. 1) and turn centerpiece of the joint rod (No. 2) until no transverse inclination remains anymore at the shift lever (No. 3).

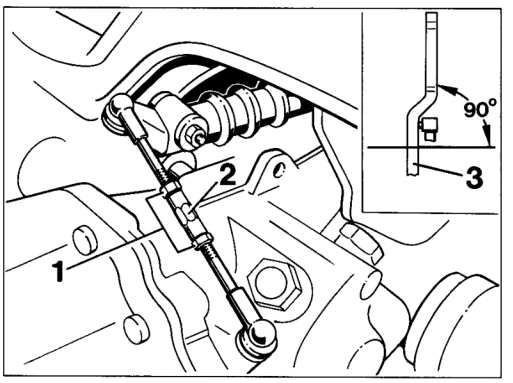

2. To adjust shift lever, move the shift lever support mount (arrow) to the front or rear until the inclination is 85°. The shift lever must remain in neutral position during this adjustment operation.

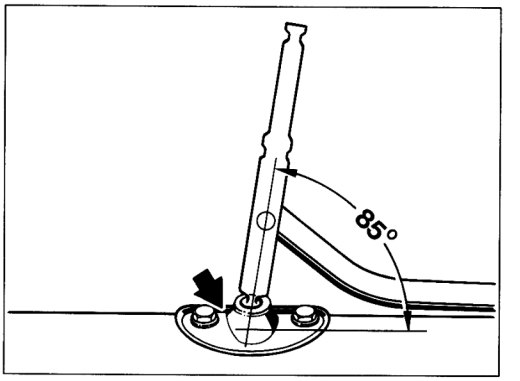

Printed in Germany – VII, 1992

Removing and installing gear set

Tools

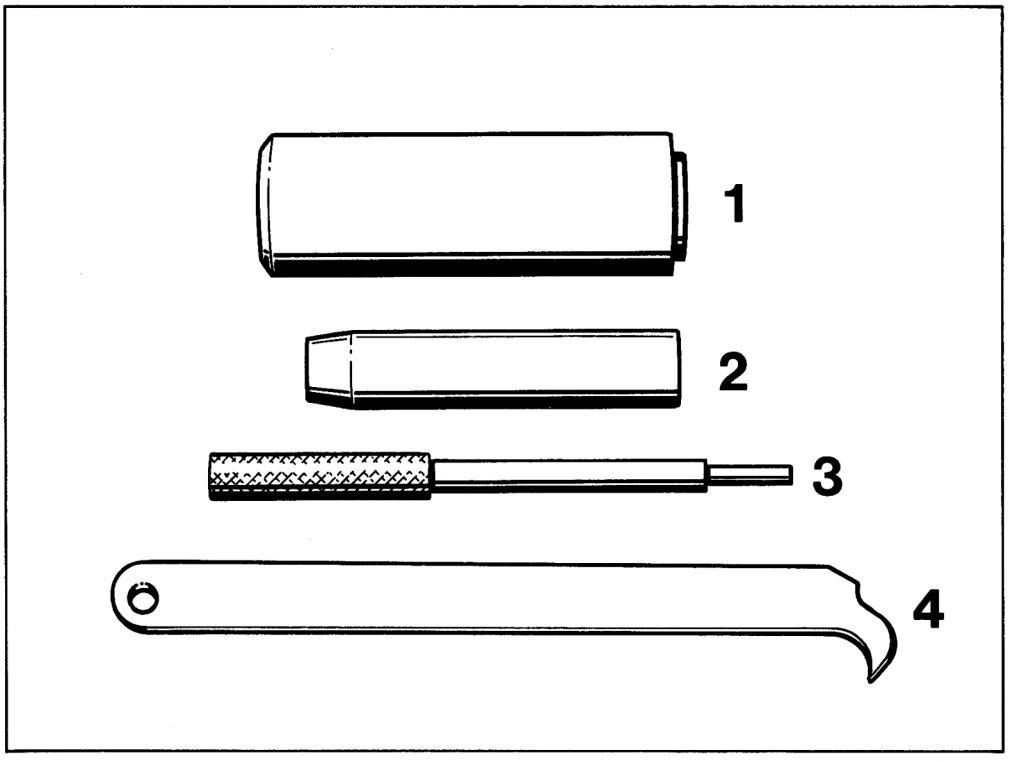

No.	Designation	Special tool	Order number	Explanation
1	Drift	9256	000.721.925.60	
2	Assembly sleeve	9255	000.721.925.50	
3	Drift	9532	000.721.953.20	
4	Hook	VW 681	–	VW Special Tool

Printed in Germany – V, 1992

Removing and installing gear set

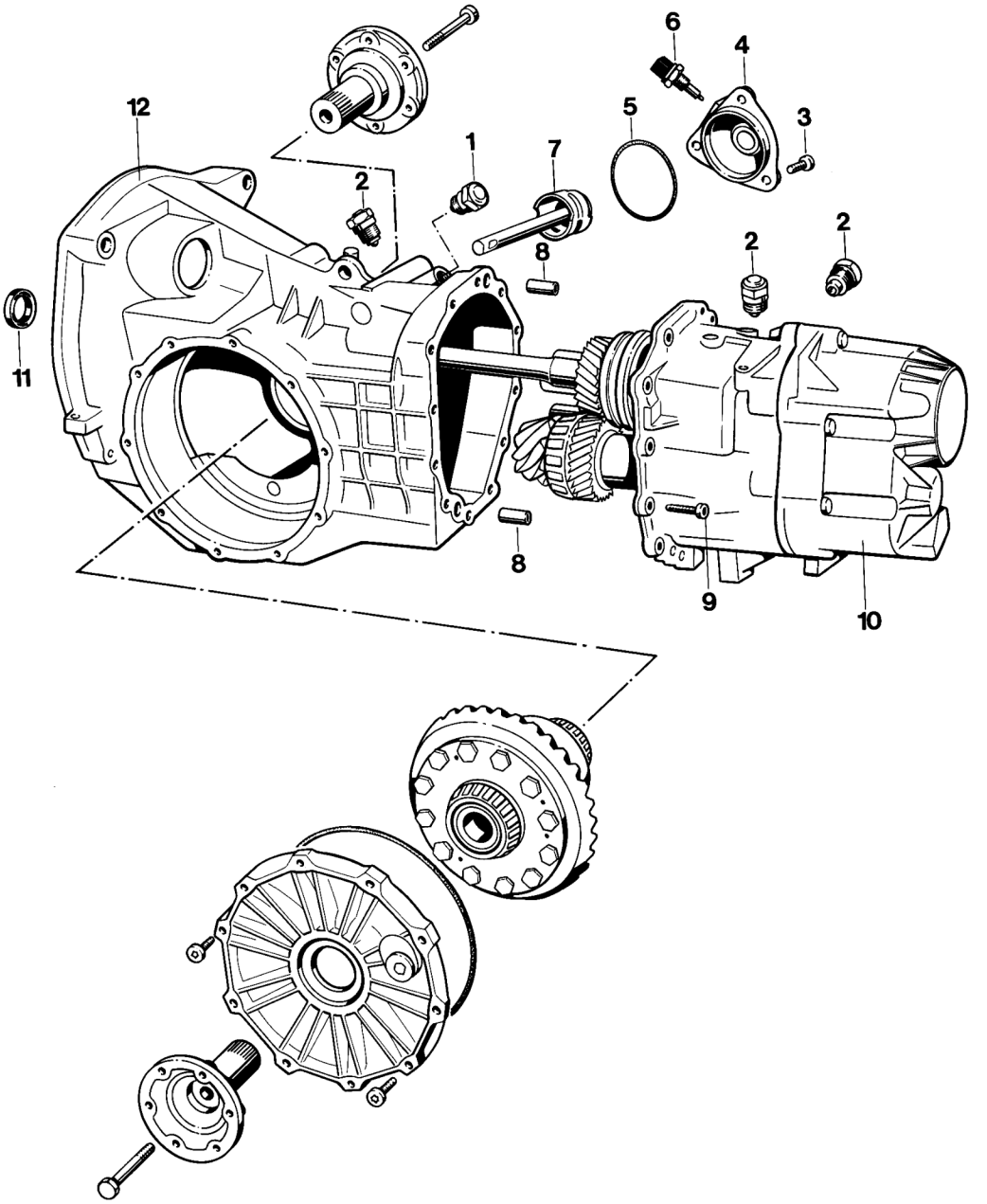

Printed in Germany – V, 1992

No.	Designation	Qty.	Note: Removal	Installation
1	Shift catch (black)	1		Do not confuse with shift catch (No. 2) Tightening torque 70 Nm (52 ftlb)
2	Shift catch (light)	3		Do not confuse with shift catch (No. 1) Tightening torque 70 Nm (52 ftlb)
3	Bolt M 8 x 22	3		Insert with Loctite 573 and tighten to 25 Nm (18 ftlb)
4	Cover	1		
5	Sealing ring	1		Replace
6	Reverse light switch	1		Tighten to 20 Nm (15 ftlb)
7	Selector shaft with shift cylinder	1		
8	Adapter sleeves	2	Use Special Tool 9532 to drive out	
9	Bolt M 8 x 36	12		Tighten to 25 Nm (18 ftlb)
10	Full gear set	1		
11	Shaft seal	1	May be replaced without dismantling the transmission (refer to page 34 - 7)	Replace, fit only after gear set has been installed as it may otherwise be damaged. Pack space between sealing lip and dust lip with multi-purpose grease
12	Transmission housing			

Printed in Germany – V, 1992

Removal and installation notes

Removal

Note

When working on the gear set, it is not necessary to remove the differential.

1. Clamp transmission with Special Tool VW 540 into assembly stand and drain transmission oil.

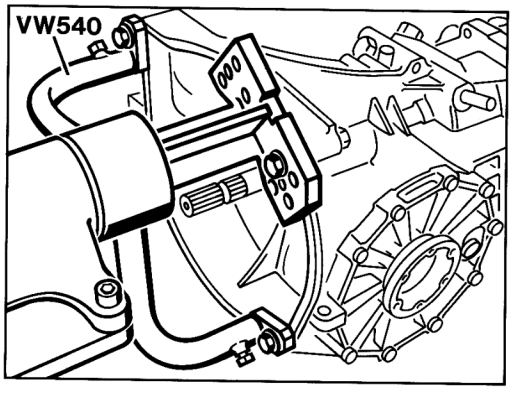

1152-34

Installation

Note

To avoid damaging the seal, install drive shaft seal only after the gear set has been installed.

1. Coat end shield/transmission housing sealing surface with sealant (Loctite 573) and place full gear set carefully into transmission housing.

2. Drive adapter sleeves into position and tighten mounting screws to 25 Nm (18 ftlb)

3. Fit seal for drive shaft (refer to page 34 - 7).

Printed in Germany – V, 1992

Removing and installing drive shaft seal if transm. has not been dismantled

Removal

1. Remove transmission.

2. Lever out seal carefully, using hook VW 681.

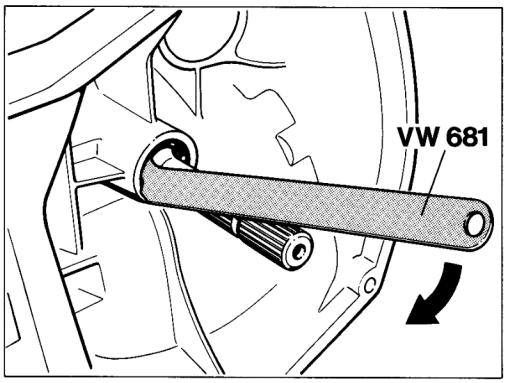

1208-34

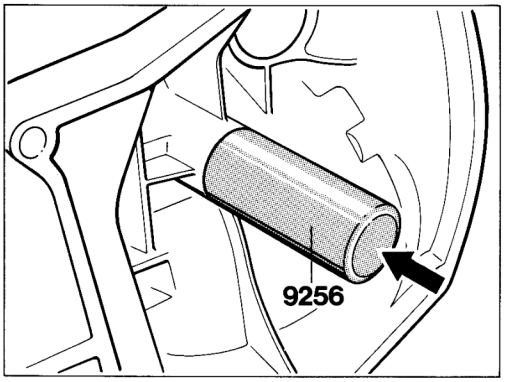

1209-34

Note

Make sure the sealing surfaces for the seal are not damaged.

Installation

1. Push assembly sleeve 9255 onto drive shaft splines.

2. Pack seal space between dust lip and sealing lip with multi-purpose grease.

3. Push seal into place using Special Tool 9256 until it is seated at the stop.

Printed in Germany – V, 1992

Removing and installing 5th and 6th gear

Tools

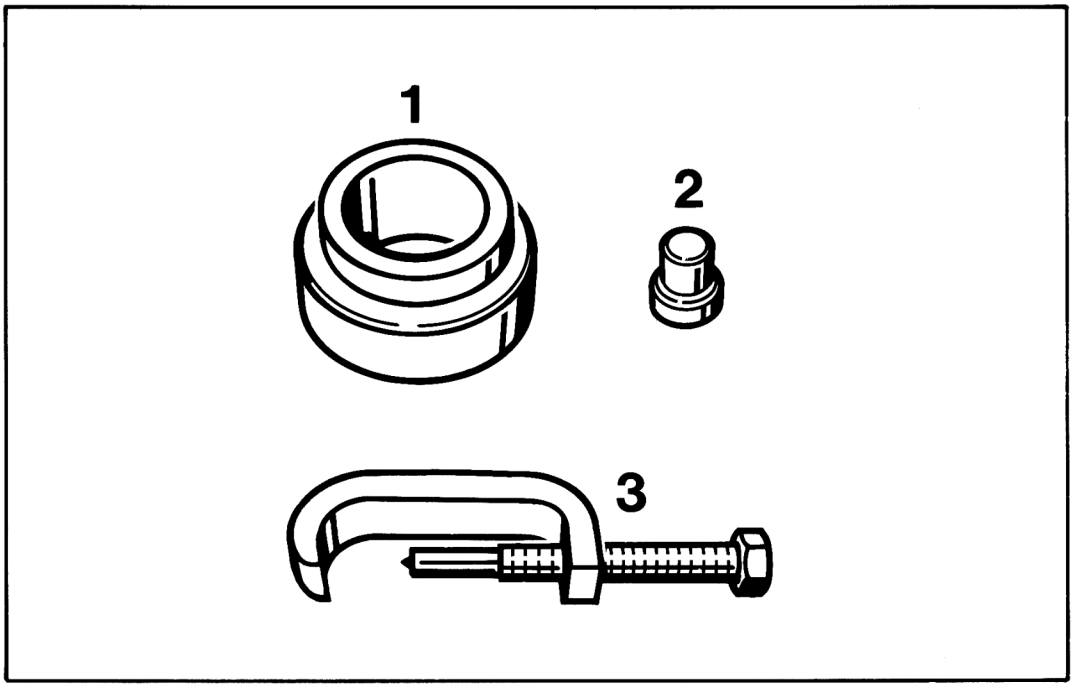

1201-34

No.	Designation	Special Tool	Order number	Explanation
1	Thrust piece	9535	000.721.953.50	
2	Thrust piece	9536	000.721.953.60	
3	Pressing device	3276	—	VW Special Tool

Printed in Germany – VIII, 1993

Removing and installing 5th and 6th gear

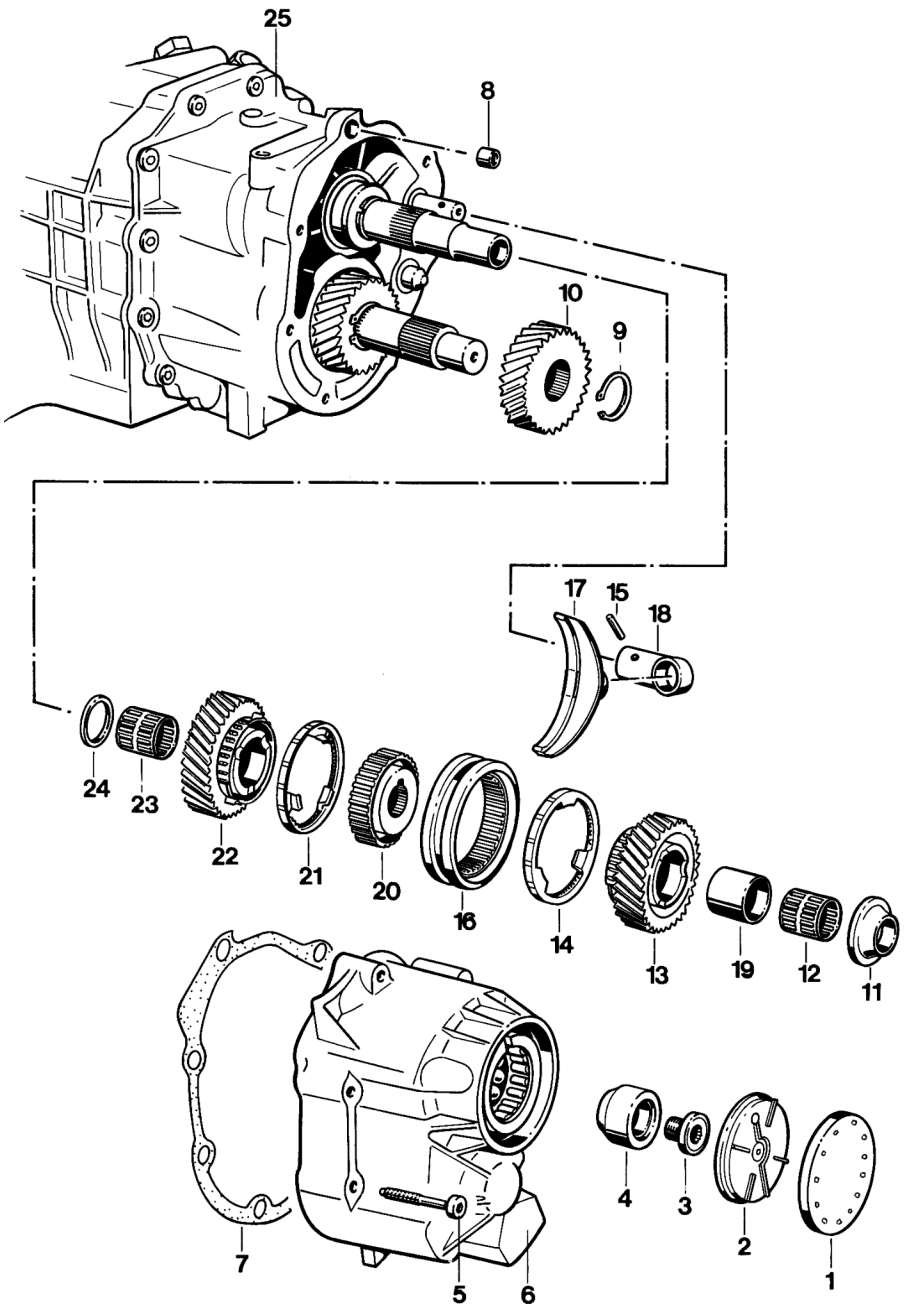

Printed in Germany – V, 1992

No.	Designation	Qty.	Note: Removal	Installation
1	Cover	1	Use a large screwdriver to lever out. The oil catcher is damaged in the process	Replace
2	Oil catcher	1	Lever out at bore using a screwdriver	Replace. Observe installation position
3	Bolt	1	Lock drive shaft, removing shift cylinder and engaging two gears	Tighten to 150 Nm (111 ftlb)
4	Four-point bearing inner race	1	Pull out using thrust piece 9535 and internal puller 30...37 mm (e.g. Kukko 21/5)	Heat to approx. 100°C and drive into place
5	Bolt M 8 x 60*	7		Tighten to 25 Nm (18 ftlb)
6	End cap	1		
7	Gasket	1		Replace
8	Adapter sleeve	2		
9	Lock ring	1		
10	Fixed gear, 5th gear	1	Engage 2 gears and pull off using two-way puller	Heat to approx. 120°C and drive in to stop, observing correct installation position. Installation position: Flange towards gearwheel for 6th gear
11	Four-point bearing inner race	1	Pull off across 5th gear loose gearwheel (No. 13), using thrust piece 9536 and two-way puller	Heat to approx. 100°C and drive in to stop
12	Needle-roller bearing	1	Mark for reinstallation	Oil with transmission oil. Fit with the same gearwheel as before
13	5th gear loose gearwheel with spring	1		
14	Synchronizing ring	1	Mark for reinstallation	Check for wear. Fit with same gearwheel as before.

No.	Designation	Qty.	Note: Removal	Installation
15	Spiral pin	1	Press out only with Special Tool 3276	Press in only with Special Tool 3276
16	Selector sleeve	1	Mark for reinstallation along with synchronzier hub. Pull off shift rod along with shift fork and dog	Marks on synchronizer hub and selector sleeve must match
17	Shift fork	1		
18	Driver	1		Replace only complete with shift rod for 5th and 6th gear
19	Bearing inner race	1	Pull off across 6th gear loose gearwheel (No. 22) using thrust piece 9536 and two-way puller	Heat to approx. 100°C and drive in until it is seated at the stop
20	Synchronizer hub	1	Pull off along with bearing inner race (No. 19)	Heat to approx. 100°C and press in to stop, observing correct position
21	Synchronizing ring	1	Mark for reinstallation	Check for wear, fit with the same gearwheel as before
22	6th gear loose gearwheel with spring	1		
23	Needle-roller bearing	1	Mark for reinstallation	Oil with transmission oil. Fit with the same gearwheel as before
24	Thrust washer	1		Cutout points towards snap ring
25	End shield	1		

*** Note**

If the height of the lug (approx. 35 mm) at the end cap is insufficient, a washer must be inserted at both of the lowermost bolts (No. 5).

Printed in Germany – V, 1992

Removal and assembly notes

Removal

1. Remove end cap, piercing center of rubber with a large screwdriver. Push in screwdriver laterally between cap and oil catcher and twist screwdriver to lever off the cap.

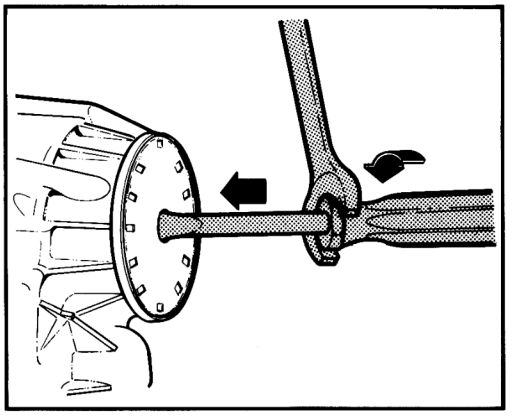

1159-34

2. To undo the bolt (No. 3), the drive shaft must be locked. To do so, remove the shift cylinder and engage two gears.

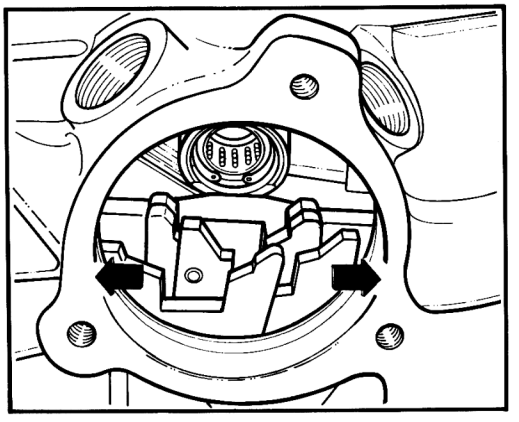

1160-34

3. Pull out four-point bearing inner race with thrust piece 9535, internal puller 30...37 mm (e.g. Kukko 21/5) and support.
Make sure the internal puller engages into the circumferential groove in the inner race.

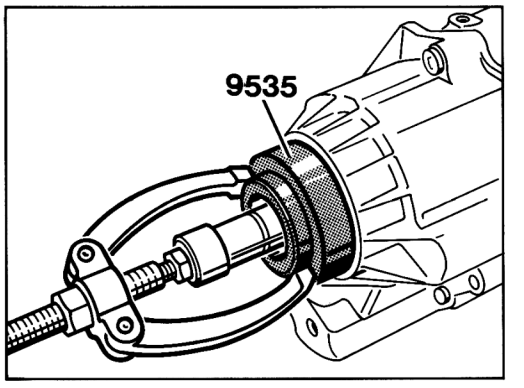

1150-34

4. Pull off four-point bearing inner race using thrust piece 9536 and two-way puller.

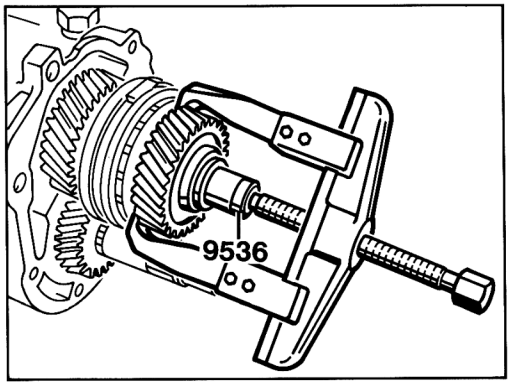

1149-34

5. Push out spiral pin for driver, using Special Tool 3276.

Note

The spiral pin must not be driven out as this will damage the mountings of the shift rod.

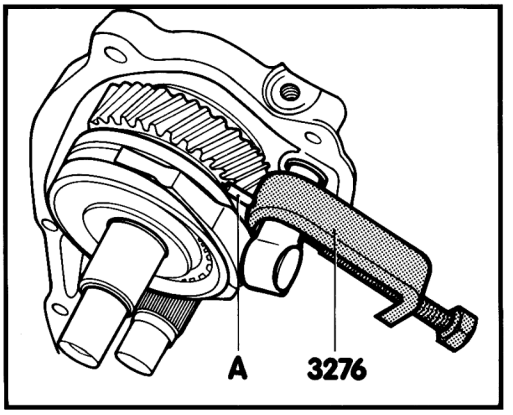

1161-34

A = Spiral pin

6. Pull off bearing inner race and synchronizer hub with thrust piece 9536 and two-way puller.

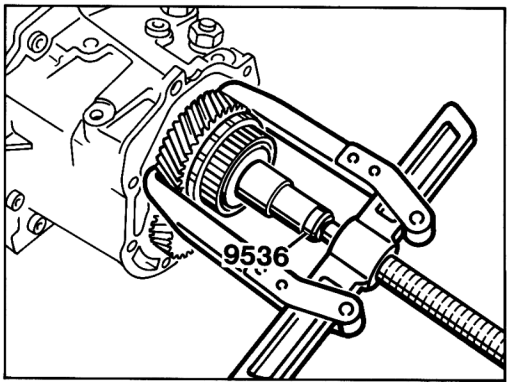

1151-34

Note

The 6th gear fixed gearwheel can only be replaced if the end shield has been removed (refer to page 34 - 21).

Installation

1. Check synchronizing ring for wear, pressing the synchronizing ring into the sliding sleeve and measuring gap „a" in three places (A, B and C) using a feeler gauge. Add the measured values and divide by 3. The result must not be less than 0.5 mm.

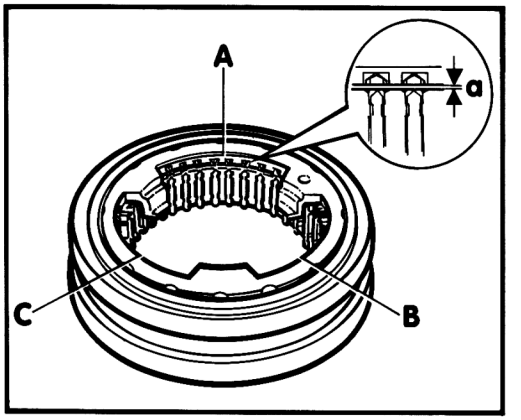

1162-34

2. Heat synchronizer hub to approx. 100°C and press in to stop, observing correct position. Installation position: The protruding front area (arrow 1) points towards the gearwheel for 5th gear and the oil groove (arrow 3) must line up with the oil bore (arrow 2).

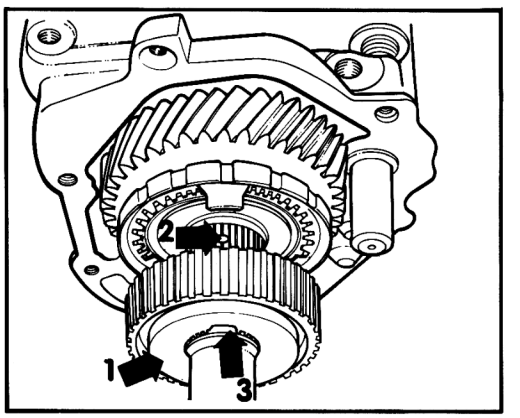

1163-34

Printed in Germany – V, 1992

3. Install sliding sleeve for 5th and 6th gear complete with shift fork and driver, observing correct position. Installation position: Marks on synchromesh hub and sliding sleeve must line up.

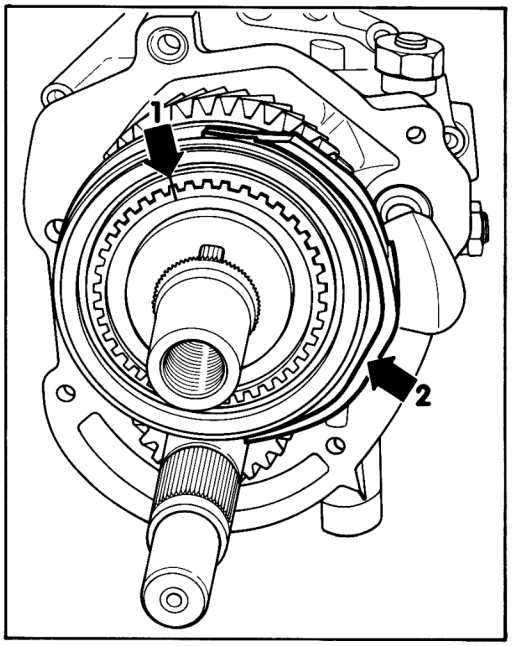

4. Press in roll pin, using Special Tool 3276.

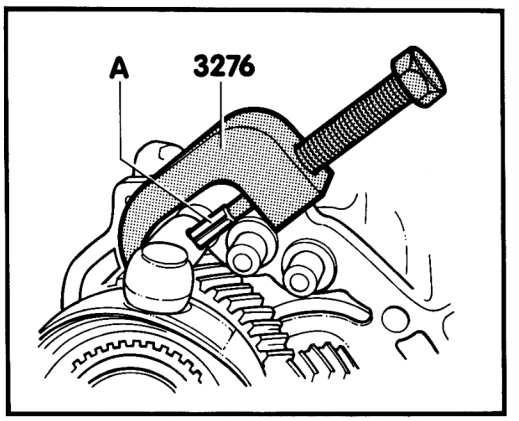

1165-34

A = Roll pin

5. Install oil catcher in correct position. Installation position: Large oil bore must line up with the groove in the cover.

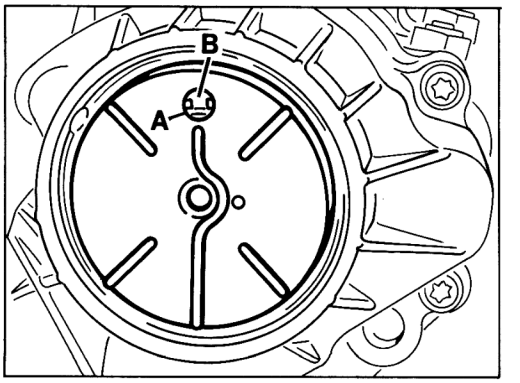

1166-34

A = Large oil bore
B = Groove in cover

Printed in Germany – V, 1992

Determining snap rings for tapered roller bearing and 6th gear gearwheel

Tapered roller bearing

Press on tapered roller bearing until it is seated against the stop.

Determine dimension between tapered roller bearing inner race and installed snap ring (push up), using a depth gauge, and determine ring thickness according to table.

Measuring range (mm)	Snap ring Thickness (mm)
32.44...32.53	1.66
32.54...32.62	1.75
32.63...32.71	1.84
32.72...32.80	1.93
32.81...32.89	2.02
32.90...32.98	2.11
32.99...33.07	2.20
33.08...33.16	2.29

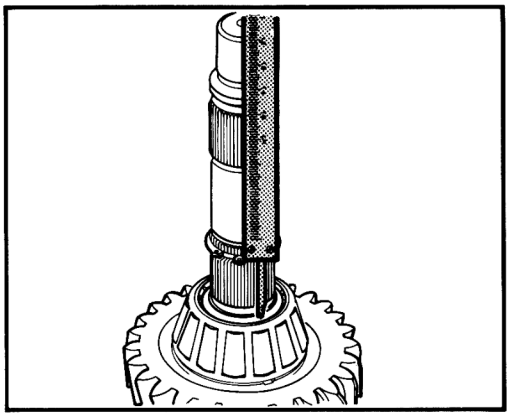

1186-34

6th gear gearwheel

Press on 6th gear gearwheel until it is seated against the stop.

Determine the thickest snap ring that can barely be inserted and install snap ring.
End play must not be more than 0.05 mm.

The following snap rings are available as spare parts:
Thickness in mm
2.11 - 2.14 - 2.17 - 2.20 - 2.23 - 2.26 - 2.29

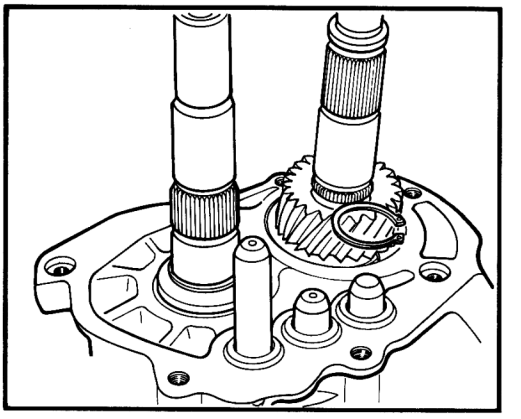

1185-34

Printed in Germany – V, 1992

Removing and installing drive pinion and drive shaft

Printed in Germany – V, 1992

Removing and installing drive pinion and drive shaft

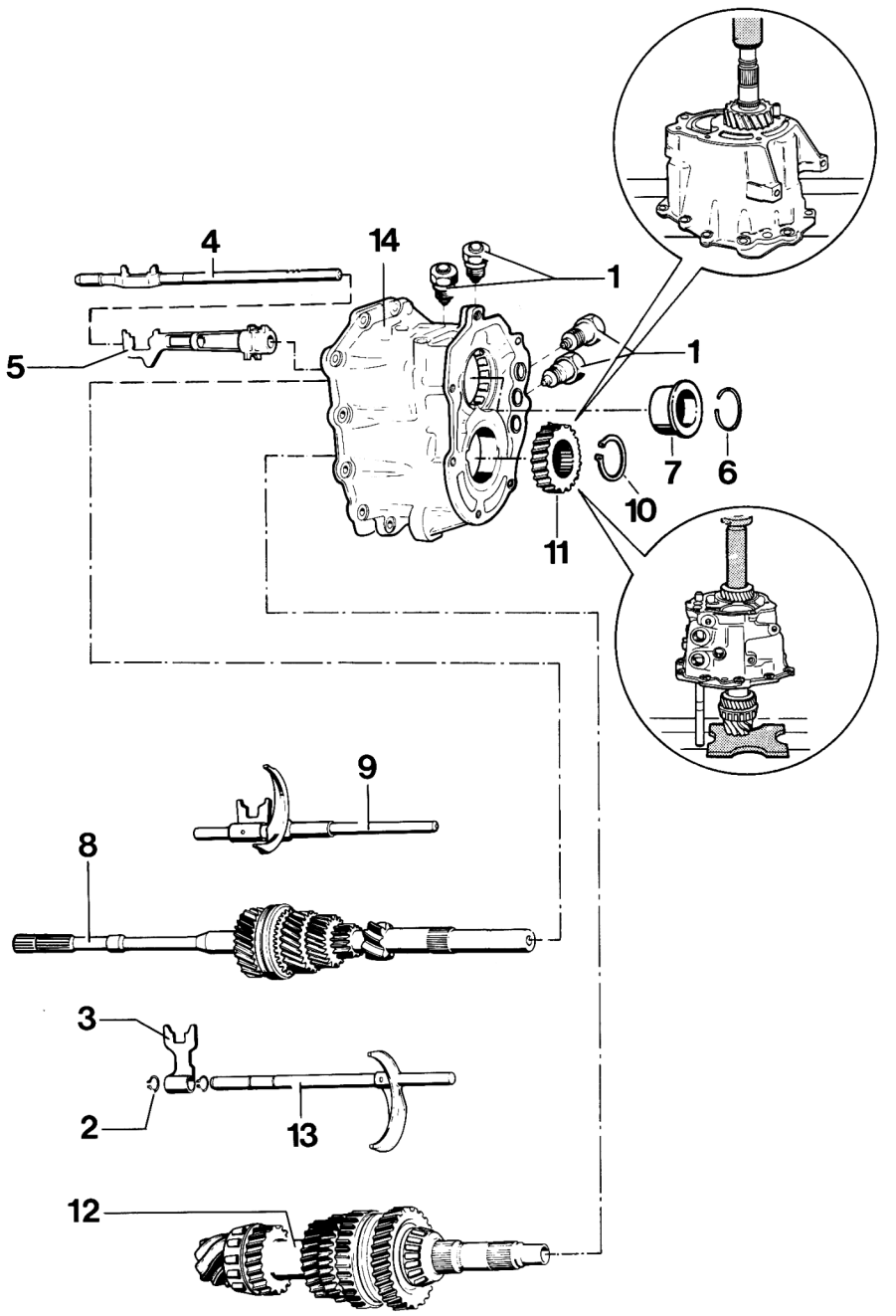

Printed in Germany – V, 1992

No.	Designation	Qty.	Note: Removal	Installation
1	Shift catch (light)	4		Do not confuse with catch No. 1 on page 34 - 5. Tighten to 70 Nm (52 ftlb)
2	Snap ring	1		
3	Driver (1st and 2nd gear)	1		
4	Shift rod (5th and 6th gear)	1		Replace only as a unit with driver for 5th and 6th gears (also refer to page 34 - 12)
5	Reverse driver	1		Cutout must engage into reverse gear return lever
6	Snap ring	1		
7	Cylinder roller bearing inner-race	1	Pull off manually	
8	Drive shaft	1	Take out along with shift rod (No. 9)	
9	Shift rod (3rd and 4th gear) with shift lever	1		Replace only as a unit with driver for 3rd and 4th gear
10	Snap ring	1	Note thickness for reinstallation	If required, redetermine thickness (refer to page 34 - 17)
11	6th gear fixed gearwheel	1	Replacement is only possible if end shield has been removed. Press off using a suitable shop press	Heat to approx. 120°C and press on to stop using a shop press Installation position: Flange must face tapered roller bearing
12	Drive pinion	1		
13	Shift rod (1st and 2nd gear)	1		Replace only complete with pin-locked shift fork
14	End shield	1		

Printed in Germany – V, 1992

Removal and installation notes

Removal

Note

If repairs are limited to the drive pinion and drive shaft, it is not required to remove reverse gear.

Installation

1. Determine snap rings for tapered roller bearings and 6th gear gearwheel (refer to page 34 - 17).

2. Install drive pinion with shift fork and shift rod for 1st/3nd gear without driver into end shield.

3. Heat 6th gear gearwheel to approx. 120°C and press on.
   Installation position: Flange must face tapered roller bearing

4. Fit snap ring.

5. Insert drive shaft complete with shift fork and 3rd/4th gear shift rod obliquely into the end shield. Observe correct installation position of shift fork.

6. Install inner race of cylinder roller bearing and fit snap ring.

7. Install driver for reverse, allowing the cutout to engage into the return lever, and slide 5th/6th gear shift rod across the driver.

8. Push 1st/2nd gear driver onto the shift rod and fit snap ring.

Printed in Germany – V, 1992

Dismantling and assembling end cover

Tools

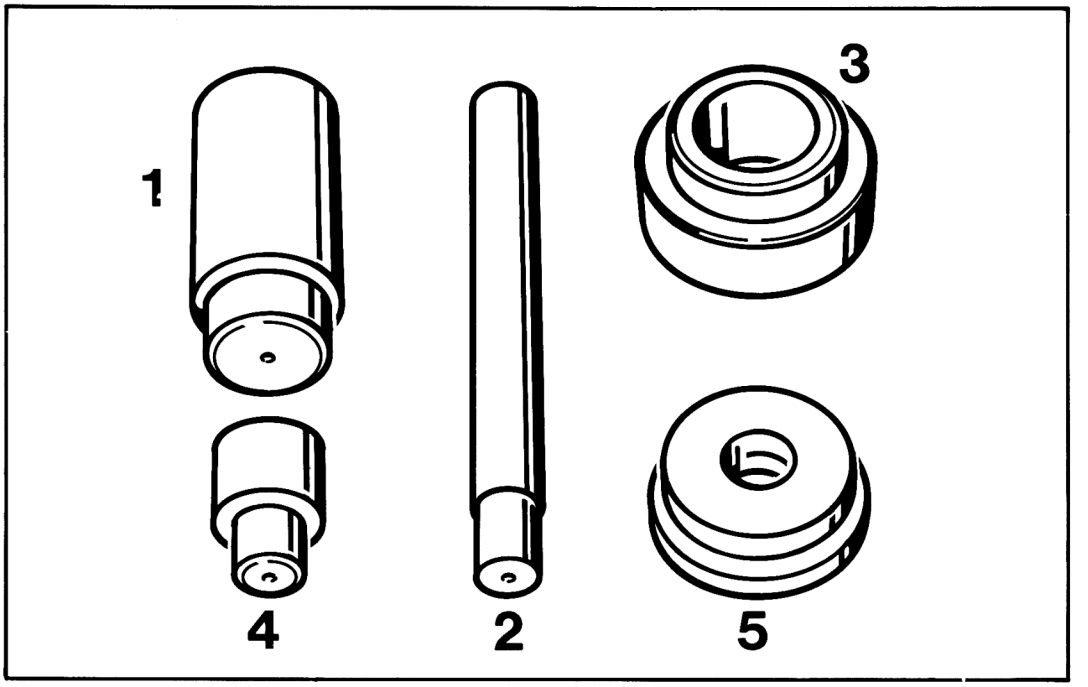

1196-34

No.	Designation	Special tool	Order number	Explanation
1	Thrust piece	VW 432	—	VW Special Tool
2	Drift	P 375	000.721.375.00	
3	Thrust piece	9535	000.721.953.50	
4	Thrust piece	VW 295 A	—	VW Special Tool
5	Thrust piece	30 - 205	—	VW Special Tool

Printed in Germany – VIII, 1993

Dismantling and assembling end cover

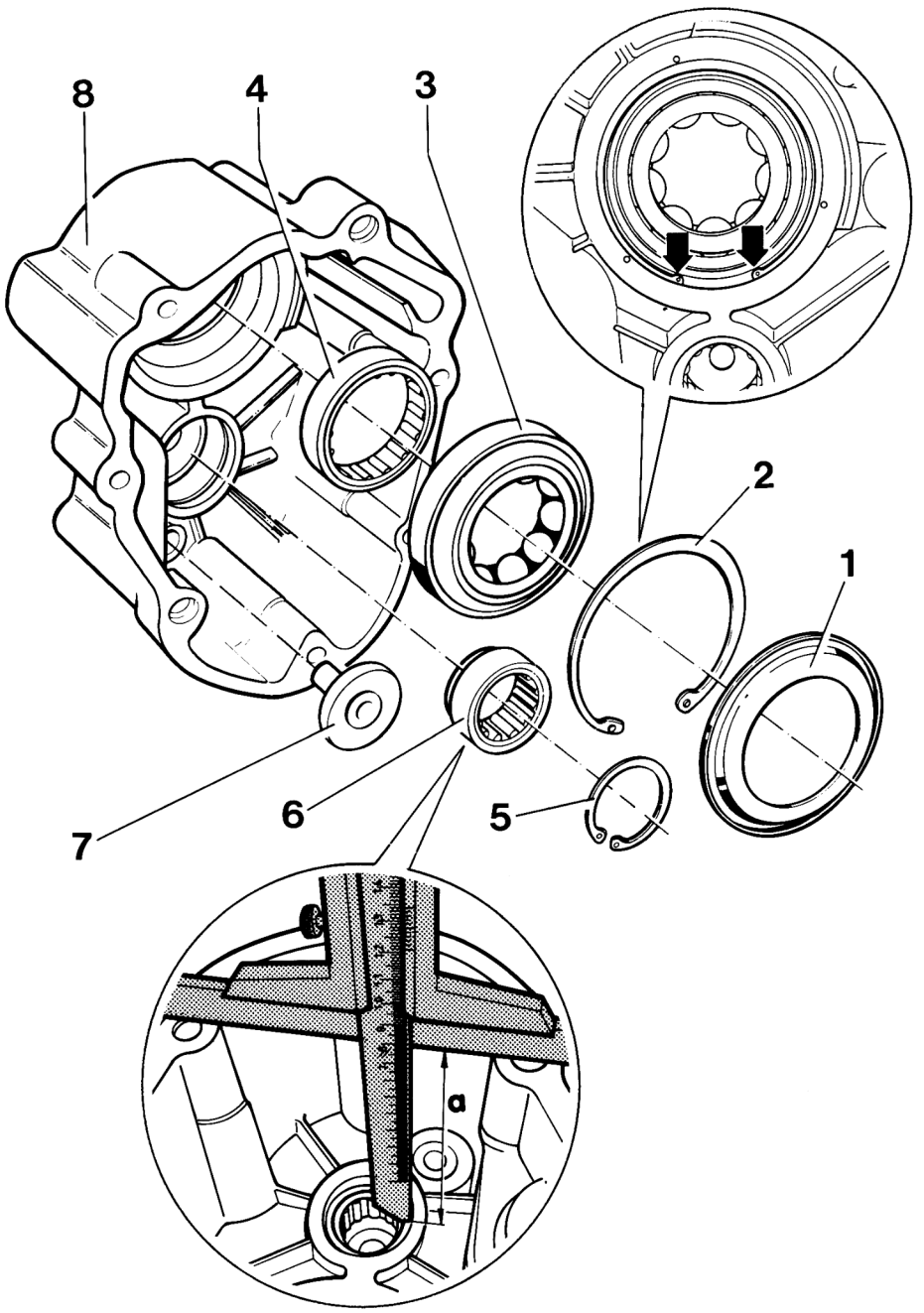

Printed in Germany – V, 1992

No.	Designation	Qty.	Note: Removal	Installation
1	Baffle plate	1	Lever out (e.g. using arm of puller 9884)	Replace, lock in three places
2	Snap ring	1	Note thickness for reinstallation	When replacing bearing and end cover, recalculate thickness. Make sure it is seated correctly in the correct position.
3	Four-point bearing outer race	1	Take out, remove upsetting marks if required	
4	Cylindrical roller bearing outer race	1	Press out (e.g. with VW 432)	Using Tool 30-205, press in to stop, inserting Special Tool 9535 at collar/stop to support cylindrical roller bearing.
5	Snap ring	1		Check for correct seating
6	Cylindrical roller bearing outer race	1	Pull out using internal puller 23.5...30 mm (e.g. Kukko 21/4)	Removal damages the bearing, i.e. the bearing must always be replaced. Use VW 295A to drive in to correct position (a = 98.6 mm)
7	Magnet with bushing	1	Remains in end cover	Drive in (e.g. using P 375)
8	End cover	1		

Printed in Germany - I, 1994

Assembly notes

1. Using Tool 30-205, drive in cylindrical roller bearing outer race for drive pinion until it is seated against the stop.
   Be sure to use Special Tool 9535 as a support for the collar/stop of the cylindrical roller bearing.

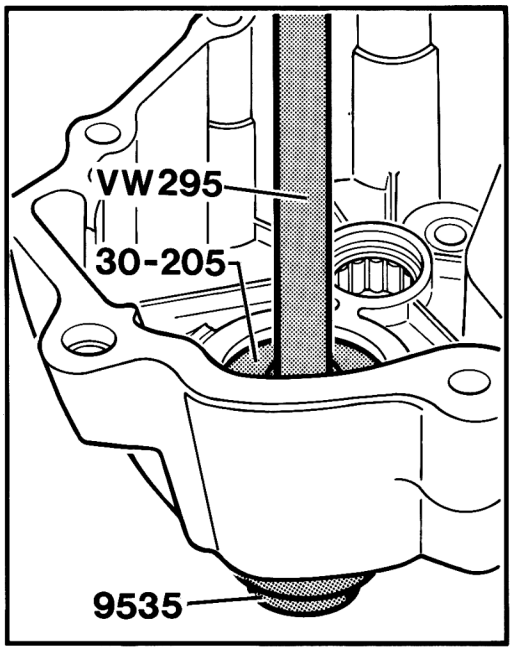

2. Determining snap ring for four-point bearing:

- Press in outer race of four-point bearing until it is seated against the stop.
- Determine the thickest snap ring that can just about be inserted.
- End play must not be more than 0.08 mm.

3. When replacing the bearing races, upset the edge of the baffle plate.
   Insert baffle plate and use a drift (ball dia. = 5 mm) to apply new upsetting marks (arrow 2) at a distance of "a" = 5 mm to the initial upsetting marks (arrow 1).
   "b" = 2 mm
   "c" = 3 mm

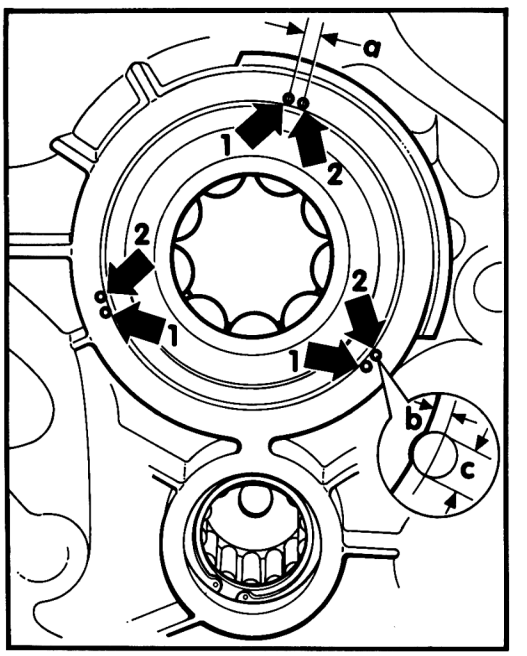

4. Upset baffle plate when replacing the end cover.

- Reinstall baffle plate.
- First upsetting mark (large arrow) must be at a distance of "d" = 10 mm to the connecting line of the shaft center.

- Also apply second and third upsetting marks at a distance of "a" = 70 mm using a drift (ball dia. = 5 mm).
  "b" = 2 mm
  "c" = 3 mm

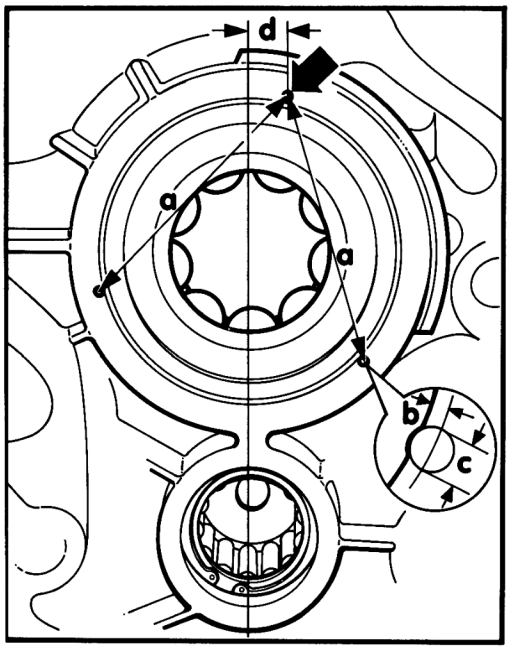

Printed in Germany – V, 1992

Recalculating adjusting shim „S4"

This adjustment is required if end shield, needle-roller bearing inner race for 1st gear loose gearwheel, synchronizer hub for 1st and 2nd gear, needle-roller bearing inner race for 2nd gear loose gearwheel, gearwheel for 3rd gear, spacer sleeve and gearwheel for 4th gear have been replaced.

This adjustment allows the preload of the tapered roller bearings for the drive pinion to be reset.

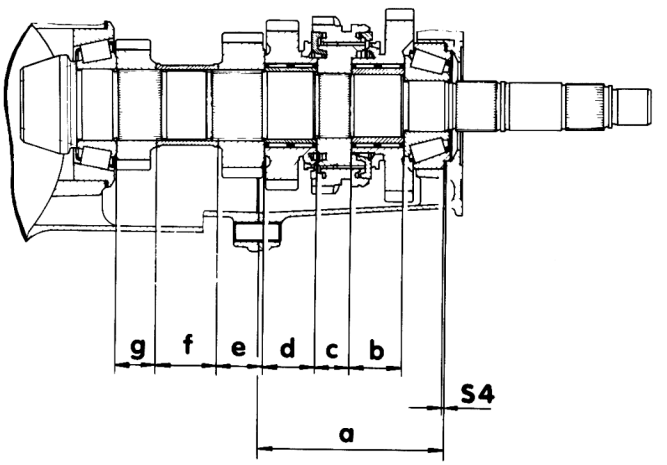

1187-34

Dim. „a" = Housing depth of the end shield

Dim. „b" = Length of inner race/needle roller bearing for 1st gear loose gearwheel

Dim. „c" = Length of hub of synchronizer hub for 1st and 2nd gear

Dim. „d" = Length of inner race/needle roller bearing for 2nd gear loose gearwheel

Dim. „e" = Length of 3rd gear gearwheel

Dim. „f" = Length of spacer sleeve

Dim. „g" = Length of 4th gear gearwheel

Dim. „S4" = Thickness of adjusting shim S4

1 - End shield
2 - Shim „S4"
3 - Needle roller bearing inner race for gearwheel of 1st gear
4 - Synchronizer hub for 1st and 2nd gear
5 - Needle roller bearing inner race for gearwheel of 2nd gear
6 - Gearwheel for 3rd gear
7 - Spacer sleeve
8 - Gearwheel for 4th gear
9 - Drive pinion

Printed in Germany – V, 1992

A - Replacing the end shield

- Measure housing depth "a" of old and new end shield and determine difference

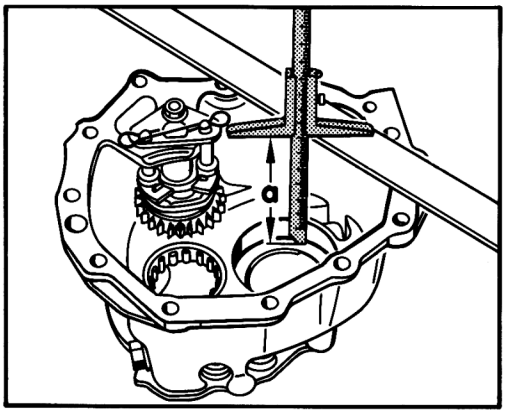

1188-34

Example:
Old end shield
Housing depth „a" = 118.40 mm
New end shield
Housing depth "a" = 118.65 mm

Difference = 0.25 mm

If the **new** end shield is deeper - fit **thicker** „S4".

If the **old** end shield is deeper - fit **thinner** „S4".

Example:
Old shim 0.95 mm
Difference + 0.25 mm

New adjusting shim "S4" 1.20 mm

The following shims are available as spare parts: Thickness in mm
0.45 - 0.50 - 0.55 - 0.60 - 0.65 - 0.70 - 0.75 - 0.80 - 0.85 - 1.25

B - Replacing needle roller bearing for 1st gear

Calculate length "b" of the inner race of the old and new needle roller bearings and determine thickness

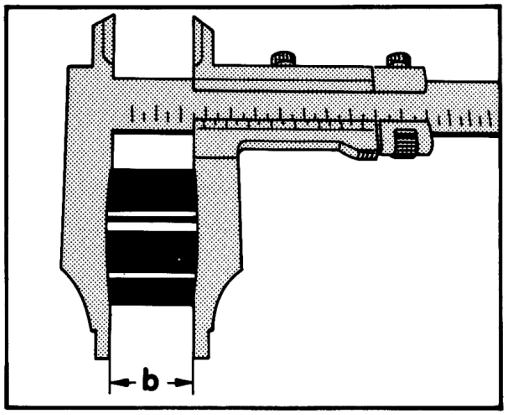

1189-34

Example:
Old inner race: "b" = 33.35 mm
New inner race: "b" = 33.40 mm

Difference = 0.05 mm

If the **new** inner race is longer - fit correspondingly **thinner** shim „S4".

If the **old** inner race is longer - fit correspondingly **thicker** shim „S4".

C - Replacement of parts 4 to 8 - pages 34 - 29

Determine difference of dimensions between old and new parts in the same manner for dimensions "c" to "g" - pages 34 - 29 and determine required adjusting shim "S4".

D - Replacing only drive set refer to page 39 - 17.

Printed in Germany - V, 1992

Dismantling and assembling end shield

Tools

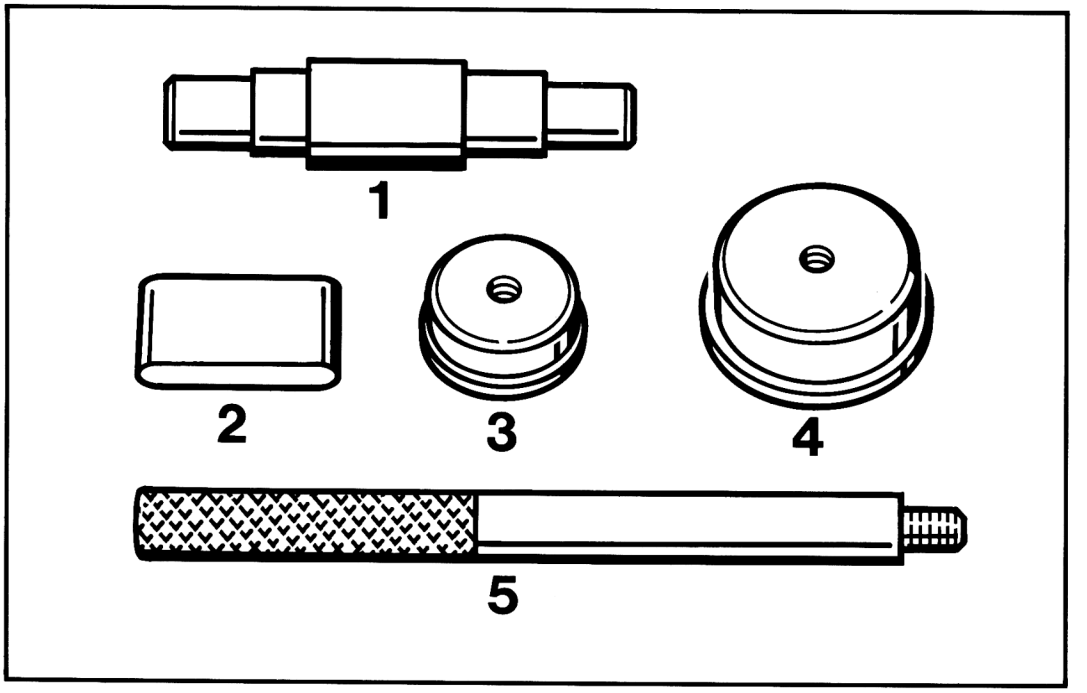

1197 - 34

No.	Designation	Special tool	Order number	Explanation
1	Drift	9223	000.721.922.30	
2	Thrust piece	9533	000.721.953.30	
3	Thrust piece	P 254 b	000.721.254.20	
4	Thrust piece	P 254 a	000.721.254.10	
5	Threaded stud	P 254	000.721.254.00	

Printed in Germany – V, 1992

Dismantling and assembling end shield

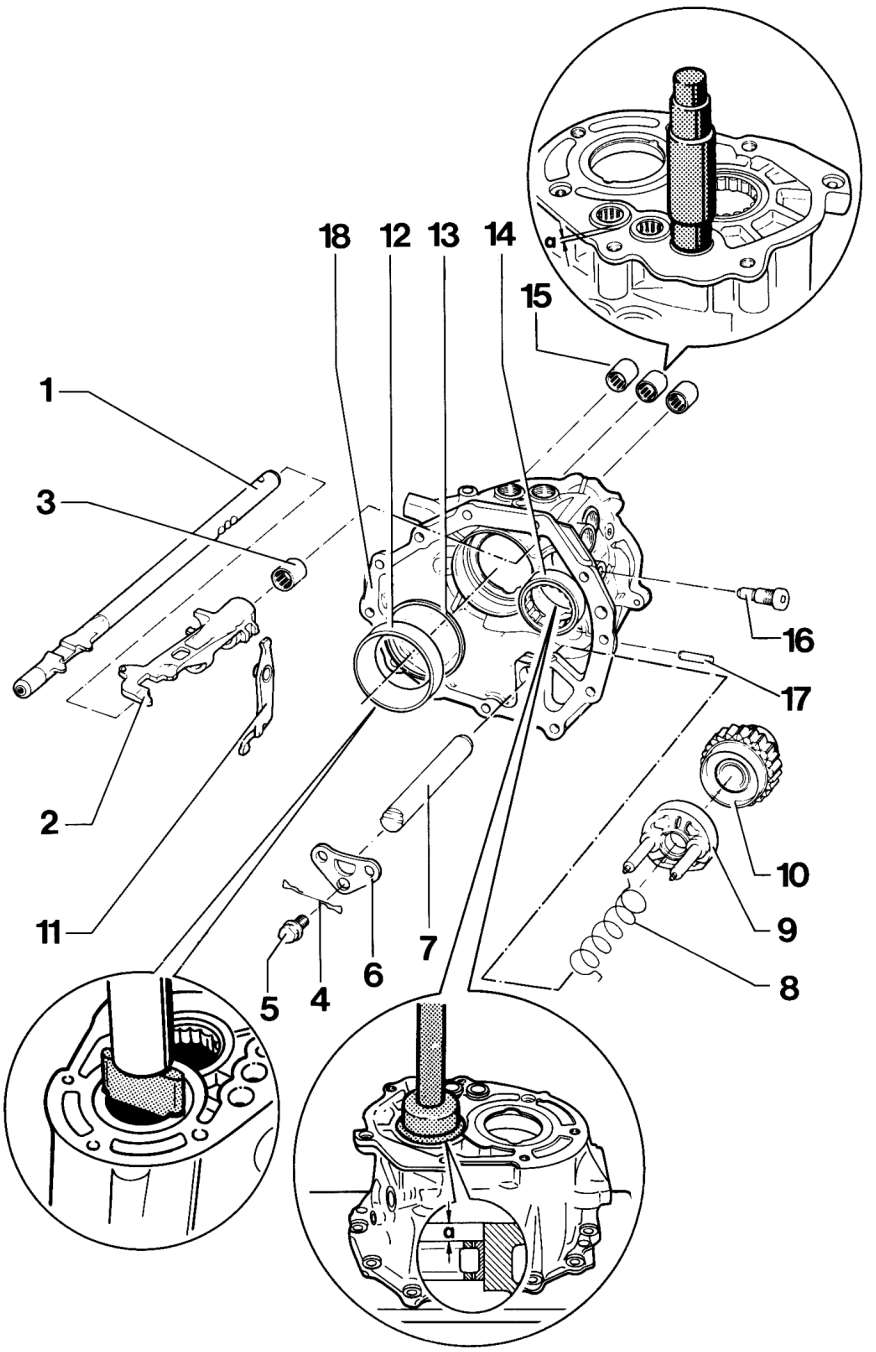

Printed in Germany – V, 1992

No.	Designation	Qty.	Note: Removal	Installation
1	Shift rod (5th and 6th gear)	1	Refer to page 34 - 22	
2	Driver for reverse	1	Refer to page 34 - 22	
3	Ball sleeve	1	Pull out using internal puller 14.5...18.5 (e.g. Kukko 21/2) and counter-support	Replace, drive in flush using Special Tool 9223
4	Spring clamp	1		
5	Bolt with collar (micro-sealed)	1		Always replace with new bolt, tighten to 25 Nm (18 ftlb)
6	Retainer plate	1		Observe installation pos.
7	Axle	1	Pull out	
8	Thrust spring	1		Observe installation pos.
9	Synchronizing ring	1		Check for wear. Observe installation pos.
10	Return gear	1		
11	Deflection lever	1		
12	Tapered roller bearing outer race	1	Press out with Special Tool 9533	Press in with P 254 A and P 254. Place with larger diameter onto the outer race
13	Adjustment shim „S4"	X	Note thickness for reinstallation	If required, determine new thickness (refer to page 34 - 29)
14	Cylindrical roller bearing outer race	1	Press out with P 254 B and P 254. Place with larger diameter onto the outer race	Press in with P 254 B and P 254, observing correct position. Installation pos.: „a" = 9 mm
15	Needle sleeve	3	Drive out (e.g. using 9223)	Replace, press in with Special Tool 9223. Install. pos.: „a" = 2.5 mm
16	Bolt for deflection lever	1		Tighten to 35 Nm (26 ftlb)
17	Cylindrical pin	1		
18	End shield	1		Replacement note: Redetermine thickness of shim „S4" (refer to page 34 - 29)

Printed in Germany – V, 1992

Assembly notes

1. Check synchronizing ring, pressing the ring onto the taper of the gearwheel and measuring gap „a" using a feeler gauge.

   Gap "a"
   Installation dimension (new) = 0.75...2.3 mm
   Wear limit = 0.2 mm

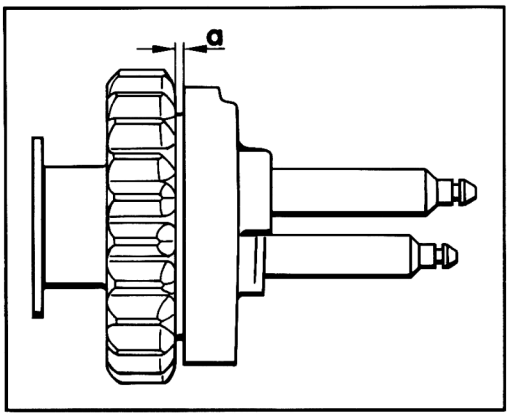

1172-34

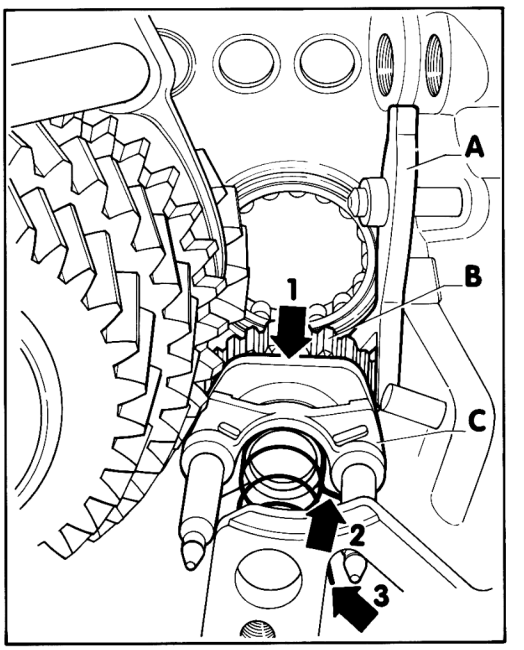

1173-34

2. Fit return gear with synchronizing ring.

- Fit return lever „A" and return gear "B", making sure the deflection lever engages into the driver of the return gear.

- Install synchronizing ring, observing correct position.
  Installation position: Chamfer (arrow 1) faces drive shaft.

- Install thrust spring into correct position.
  Installation position: Hook single-hook end into cutout in the synchronizing ring (arrow 2) and double-hook end into aperture at end shield (arrow 3).

- Push in axle „C", ensuring it is seated in correct position.

- Place retainer plate „A" into position.
  Installation position: The radii of the bores for the lock pins of the synchronizing ring face the end shield.

- Place spring clamp „B" into position.

- Always replace screw „D" (micro-sealed screw) and tighten to 25 Nm (18 ftlb).

Printed in Germany – V, 1992

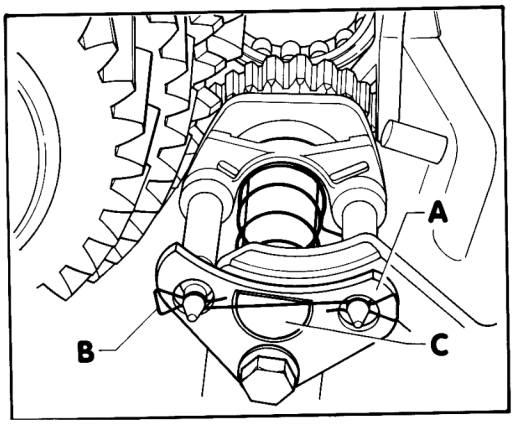

1174-34

Printed in Germany – V, 1992

Dismantling and assembling transmission housing

Tools

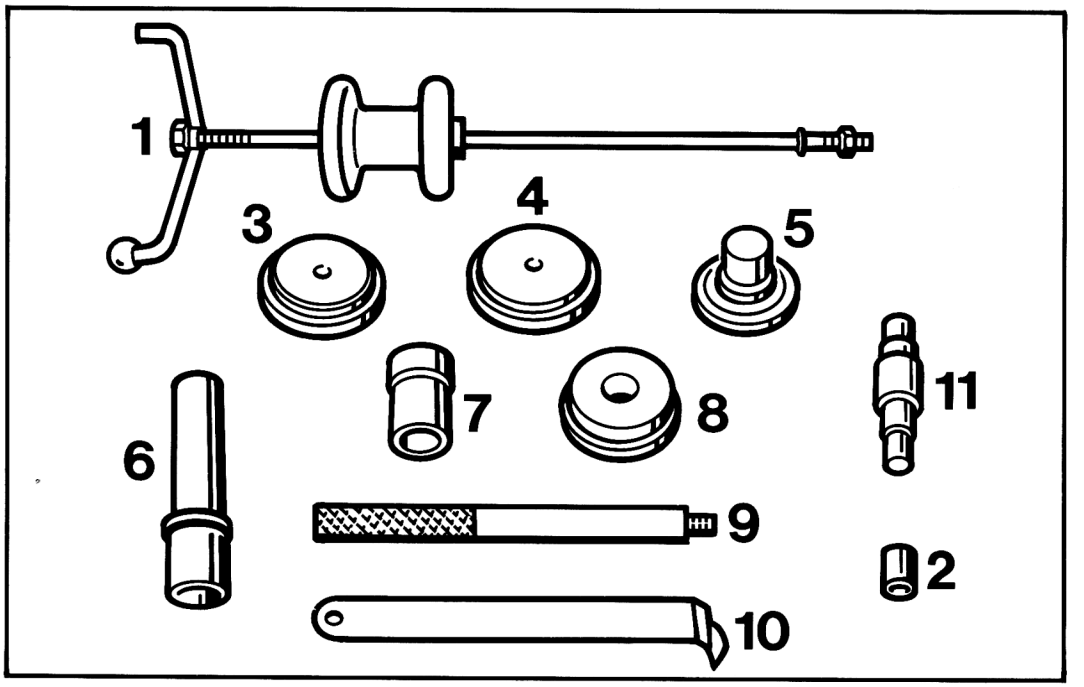

1198-34

No.	Designation	Special tool	Order number	Explanation
1	Punch	VW 771/1	–	VW Special Tool
2	Threaded sleeve	VW 771/15	–	VW Special Tool
3	Thrust piece	9247/4	000.721.924.70	
4	Thrust piece	9247/3	000.721.924.70	
5	Thrust piece	9534	000.721.953.40	
6	Drift	P 381	000.721.381.00	
7	Thrust piece	VW 454	–	VW Special Tool
8	Thrust piece	2050	–	VW Special Tool
9	Threaded stud	P 254	000.721.254.00	
10	Push-out lever	VW 681	–	VW Special Tool
11	Drift	9223	000.721.922.30	

Printed in Germany – V, 1992

Dismantling and assembling transmission housing

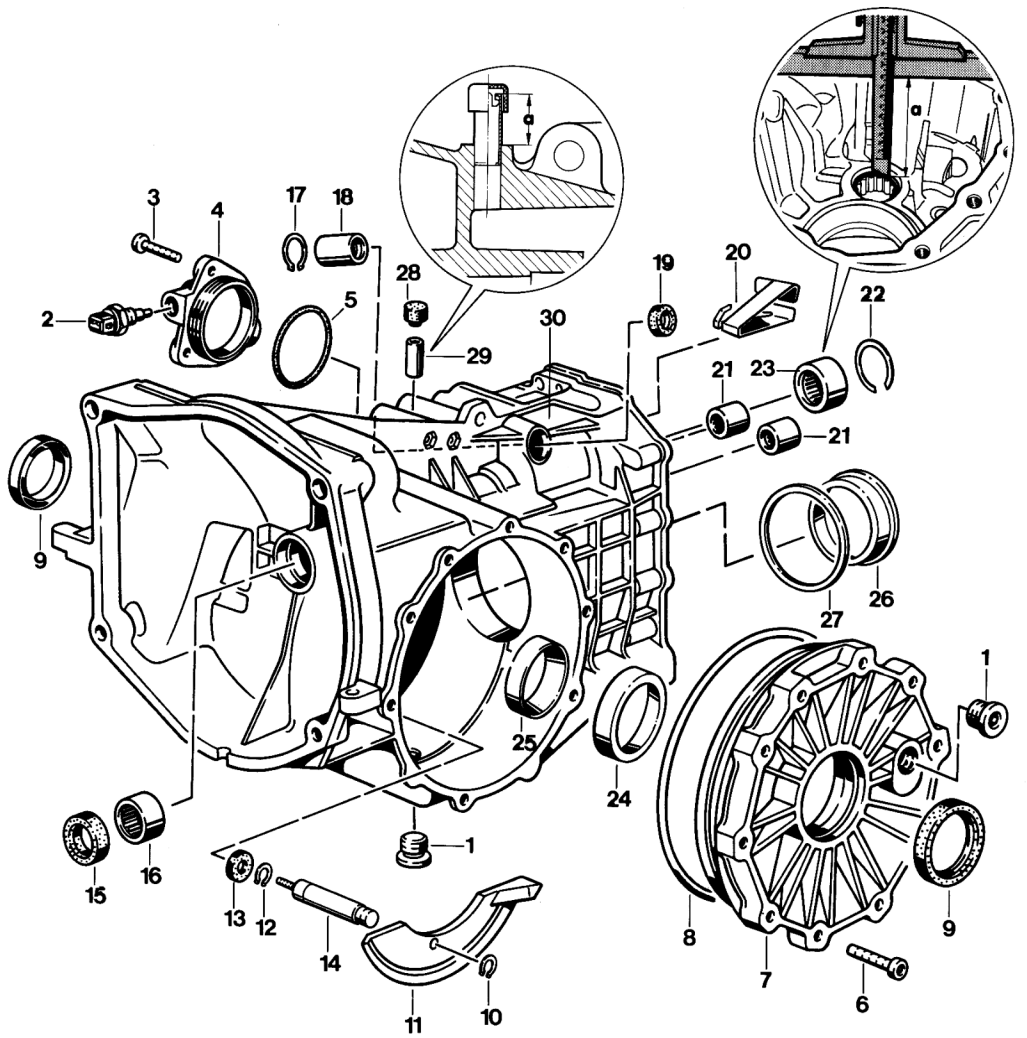

1139-34

Printed in Germany – V, 1992

No.	Designation	Qty.	Note: Removal	Installation
1	Plug	2		Tighten to 35 Nm (26 ftlb)
2	Reverse light switch	1		Tighten to 20 Nm (15 ftlb)
3	Pan head screw	3		Tighten to 25 Nm (18 ftlb)
4	Cover	1		
5	Sealing ring	1		Replace
6	Pan head screw	10		Tighten to 25 Nm (18 ftlb)
7	Transmission side cover	1		When replacing cover, adjust ring gear
8	Sealing ring	1		Replace
9	Shaft seal	2		Pack space between sealing lip and dust lip with multi-purpose grease. Use Special Tool 9534 to drive in to stop
10	Snap ring	1		
11	Shroud	1		
12	Snap ring	1		
13	Form magneto	1		
14	Threaded flange	1		Before screwing in, coat with Loctite 271. Tightening torque 10 Nm (7 ftlb)
15	Shaft seal	1	May also be replaced if transmission has not been dismantled.	Do not fit until gear set has been installed (refer to page 34 - 7). Pack space between dust lip and sealing lip with multipurpose grease
16	Needle roller bearing	1	Pull out with internal puller 30 - 37 mm (e.g. Kukko 21/5), VW 771/15 and VW 771/1	Press in to stop (e.g. with P 381). The lettering on the bearing must face the thrust piece

Printed in Germany – V, 1992

No.	Designation	Qty.	Note: Removal	Installation
17	Snap ring	1		
18	Ball sleeve	1	Pull out with internal puller 14...20 mm (e.g. Kukko 21/2), VW 771/15 and 771/1	Replace, use Special Tool 9223 to drive in to stop
19	Shaft seal	1	Pull out with VW 681. May also be replaced if transmission has not been dismantled	Pack space between dust lip and sealing lip with multipurpose grease. Drive in to stop using Special Tool 9223
20	Cover plate	1	Press retaining lug down, inserting a small screwdriver through the breather tube, and pull out	Engage retaining lug into breather tube
21	Ball sleeve	2	Pull out with internal puller 14...20 mm (e.g. Kukko 21/2), VW 771/1 and VW 771/15	Replace, drive in with Special Tool 9223
22	Snap ring	1	Lever out with two screwdrivers	Check for correct seating
23	Needle roller bearing	1	Pull out with internal puller 30...37 mm (e.g. Kukko 21/5), VW 771/1 and VW 771/15	Press into correct pos. (e.g. with VW 454). Make sure the lettering on the bearing faces the thrust piece „a“ = 105 mm
24	Tapered roller bearing outer race	1	Pull out with internal puller 71...100 mm (e.g. Kukko 21/9) and countersupport	Press in to stop (e.g. with Special Tool 9247/4), supporting cover at the aperture for the joint flange. When replacing, readjust ring gear.
25	Tapered roller bearing outer race	1	Pull out with internal puller 50...70 mm (e.g. Kukko 21/8) and countersupport	Press in to stop (e.g. with Special Tool 2050). The large diameter must face the outer race. When replacing, readjust ring gear.

Printed in Germany – V, 1992

No.	Designation	Qty.	Note: Removal	Installation
26	Tapered roller bearing outer race	1	Drive out using Special Tool 9247/4 and VW 771/1	Heat transmission housing to approx. 120°C and press in with Special Tool 9247/3 and P 254, using a shop press. Continue pressing for 1 to 2 minutes until heat exchange has occurred
27	Adjusting shim „S3"	X	Note thickness for reinstallation	If required, recalculate thickness (refer to page 39 - 17)
28	Cap	1	Pull off manually	
29	Bleeder tube	1		Observe correct pressing depth. „a" = 18 ± 0.5 mm
30	Transmission housing	1		

Printed in Germany – VIII, 1993

Dismantling and assembly notes

Dismantling

1. Remove snap ring (No. 22), disengaging one end of the snap ring from the groove by turning with screwdriver „A".
   Secure disengaged end with screwdriver "B".
   Continue levering out ring with screwdriver „A".

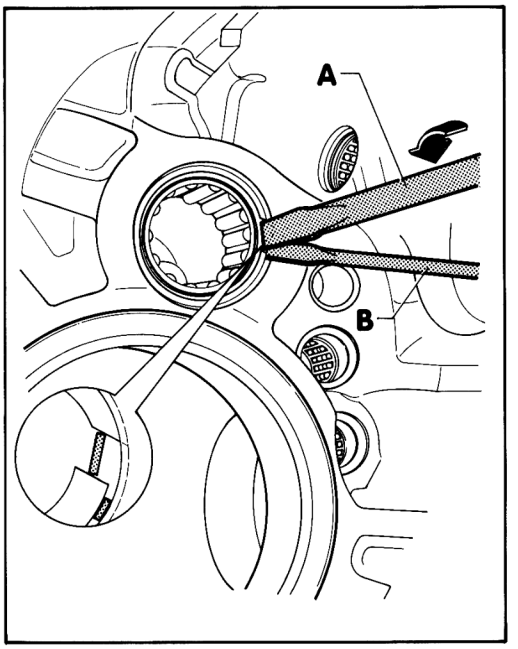

2. Drive out tapered roller bearing for drive pinion with Special Tool 9247/4 and punch tool VW 771/1.

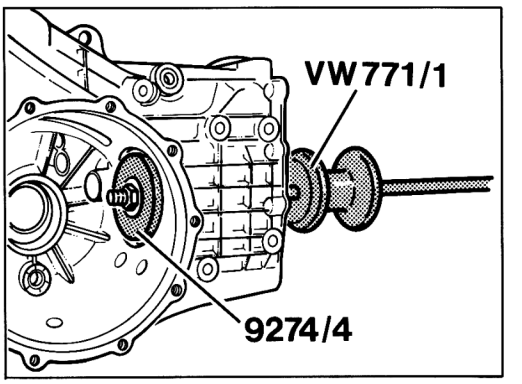

1176-34

Assembly

1. Place tapered roller bearing outer race for drive pinion into heated transmission housing. Always fit with a shop press as the bearing race might otherwise be tilted in the bore and get stuck.
   Use Special Tool 9247/3 and pin P 254.
   Keep up preload under the press for approx. two more minutes until heat exchange has occurred.

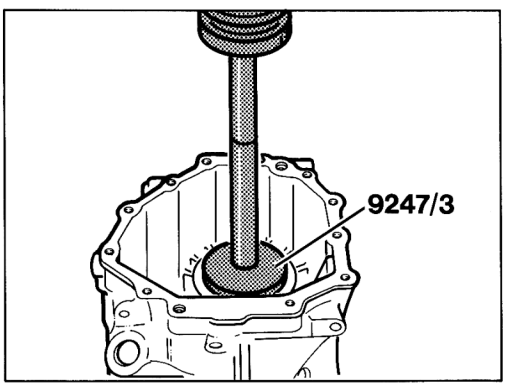

1177-34

Printed in Germany – V, 1992

Dismantling and assembling drive shaft

Tools

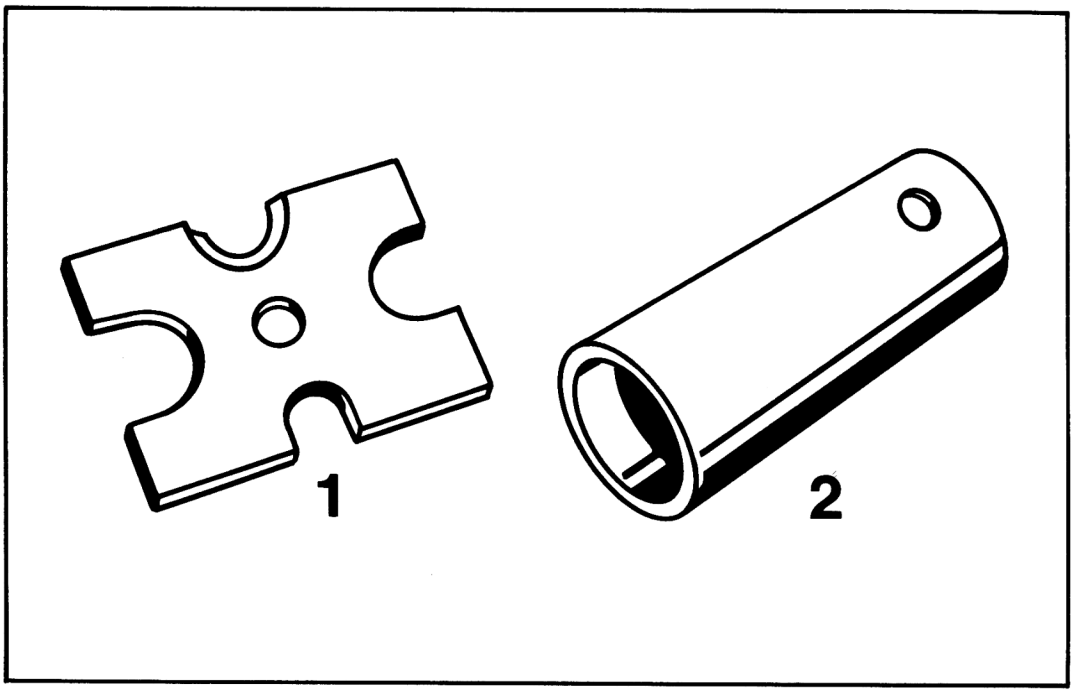

1199-35

No.	Designation	Special tool	Order number	Explanation
1	Thrust plate	VW 401	–	VW Special Tool
2	Pipe section	VW 519	–	VW Special Tool

Printed in Germany – V, 1992

Dismantling and assembling drive shaft

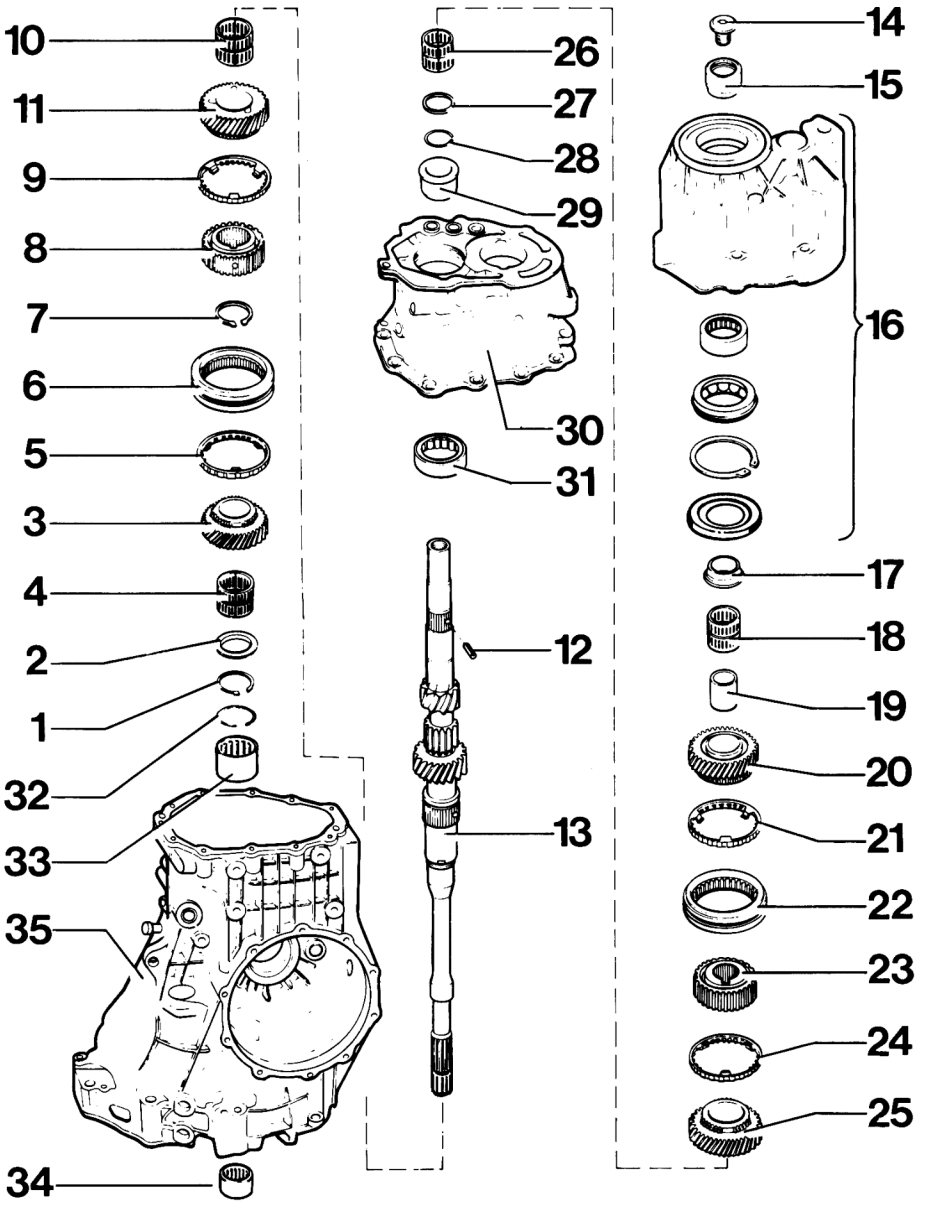

Printed in Germany – V, 1992

No.	Designation	Qty.	Note: Removal	installation
1	Snap ring	1		
2	Thrust washer	1		
3	4th gear loose gearwheel with spring	1		Insert spring before installing gearwheel
4	Needle roller bearing	1	Mark for reinstallation	Oil with transmission oil. Fit with the same gearwheel as before.
5	Synchronizing ring	1	Mark for reinstallation	Check for wear. Fit with the same gearwheel as before.
6	Sliding sleeve	1		
7	Snap ring	1	Note thickness for reinstallation	When replacing the synchronizer hub (No. 8), redetermine thickness
8	Synchroninzer hub	1	Press off with tools VW 412 and VW 401	Heat to approx. 100°C and press on, observing correct position
9	3rd gear synchronizing ring (molybdenium-coated)	1	Mark for reinstallation	Check for wear. Fit with the same gearwheel as before.
10	Needle roller bearing	1	Mark for reinstallation	Oil with transmission oil and fit with the same gearwheel as before.
11	3rd gear loose gearwheel with spring	1		Insert spring before installing gearwheel.
12	Clamping sleeve	1	Remains on drive shaft	When replacing the drive shaft, drive in sleeve until it is seated in the correct position
13	Drive shaft	1		
14	Screw	1	Page 34 - 10	
15	Four-point bearing inner race	1	Page 34 - 10	
16	End cover assy.	1	Page 34 - 10	

Printed in Germany – V, 1992

No.	Designation	Qty.	Note: Removal	Installation
17	Four-point bearing inner race	1	Page 34 - 10	
18	Needle roller bearing	1	Page 34 - 10	
19	Bearing inner race	1	Page 34 - 10	
20	5th gear loose gearwheel	1	Page 34 - 10	
21	Synchronizing ring	1	Page 34 - 10	
22	Selector sleeve	1	Page 34 - 10	
23	Synchronizer hub	1	Page 34 - 10	
24	Synchronizing ring		Page 34 - 10	
25	6th gear loose gearwheel	1	Page 34 - 10	
26	Needle roller bearing	1	Page 34 - 10	
27	Thrust washer	1	Page 34 - 10	
28	Snap ring	1	Page 34 - 20	
29	Cylindrical roller bearing inner race	1	Page 34 - 20	
30	End shield	1	Page 34 - 20	
31	Cylindrical roller bearing outer race	1	Page 34 - 32	
32	Snap ring	1	Page 34 - 38	
33	Needle roller bearing	1	Page 34 - 38	
34	Needle roller bearing	1	Page 34 - 38	
35	Transmission housing	1	Page 34 - 38	

Printed in Germany – V, 1992

Dismantling and assembly notes

Dismantling

1. Press off synchronizer hub for 3rd and 4th gear.

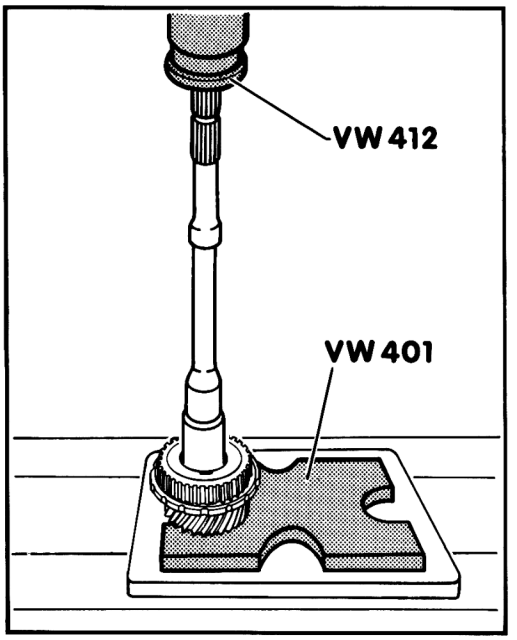

Assembly

1. Insert spring into loose gearwheel, engaging the hooked end into the bore.

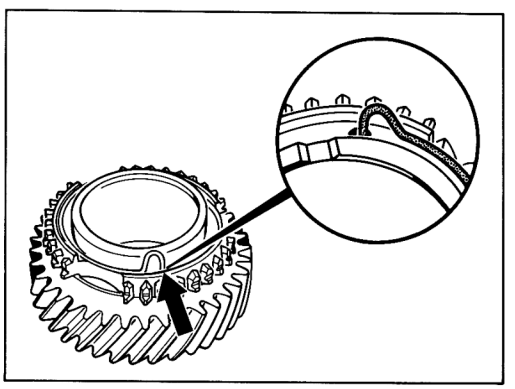

1179-35

2. Check synchronizing ring for wear, pushing synchronizing ring into the sliding sleeve and measuring gap "a" in three places (A, B and C) using a feeler gauge. Add measured values and divide by 3. The resulting value must not be less than 0.5 mm.

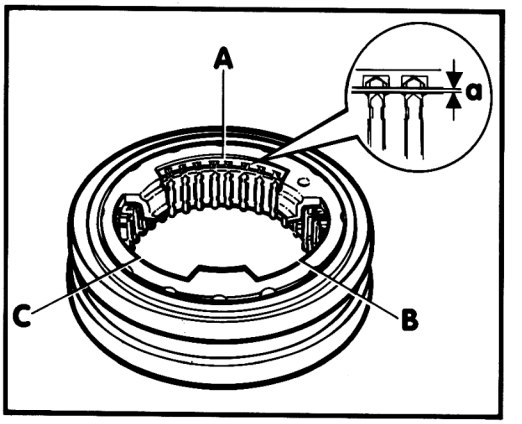

1162-34

3. Heat synchronizing body to approx. 100°C and press into place, observing correct position. Make sure the oil groove (arrow 1) lines up with the oil bore (arrow 2) in the drive shaft.

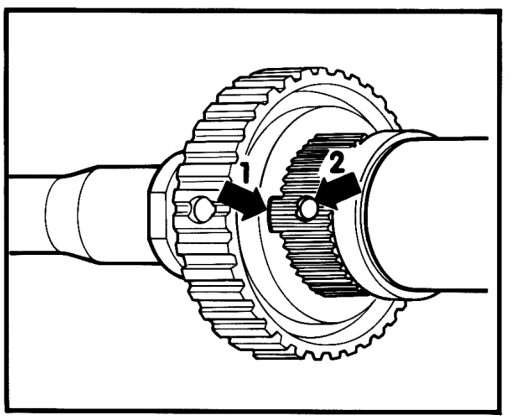

1180-35

Printed in Germany – V, 1992

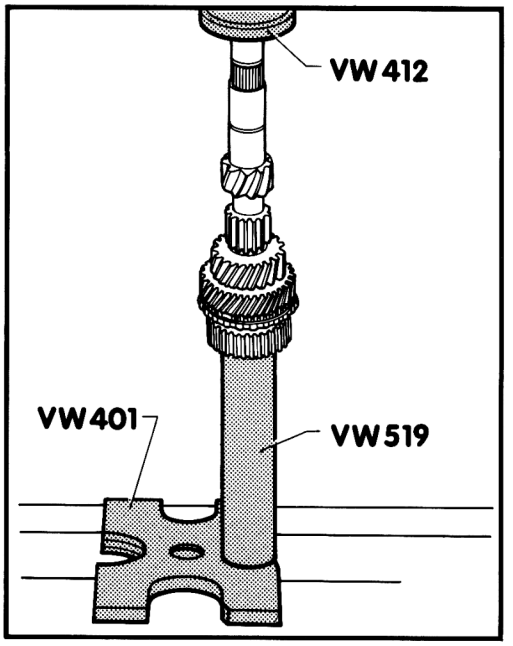

4. Redetermine thickness of snap ring on the synchronizer hub.

- Press synchronizer hub up to the stop, observing correct position.

- Determine the thickest snap ring that can just barely be inserted and insert snap ring. Make sure the opening lines up with the oil groove of the synchronizer hub.

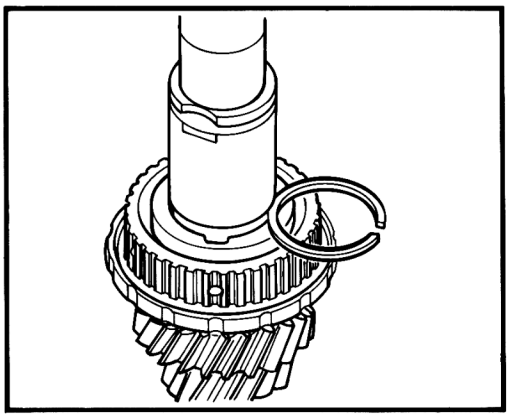

5. Drive clamping sleeve into the drive shaft, inserting 9 mm dia. drift "A" into the oil bore and driving in clamping sleeve "B" until it rests on the drift stop.

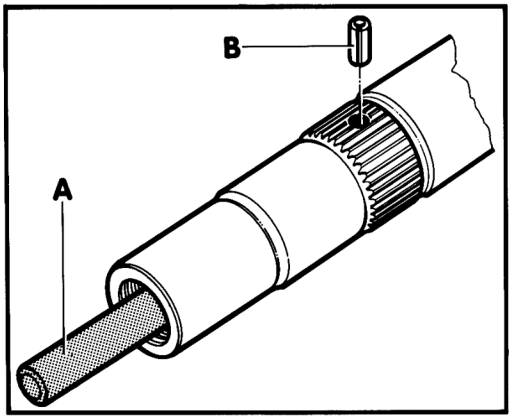

1183-35

A = Drift, 9 mm dia.
B = Clamping sleeve

Printed in Germany – V, 1992

Dismantling and assembling drive pinion

Printed in Germany – V, 1992

Dismantling and assembling drive pinion

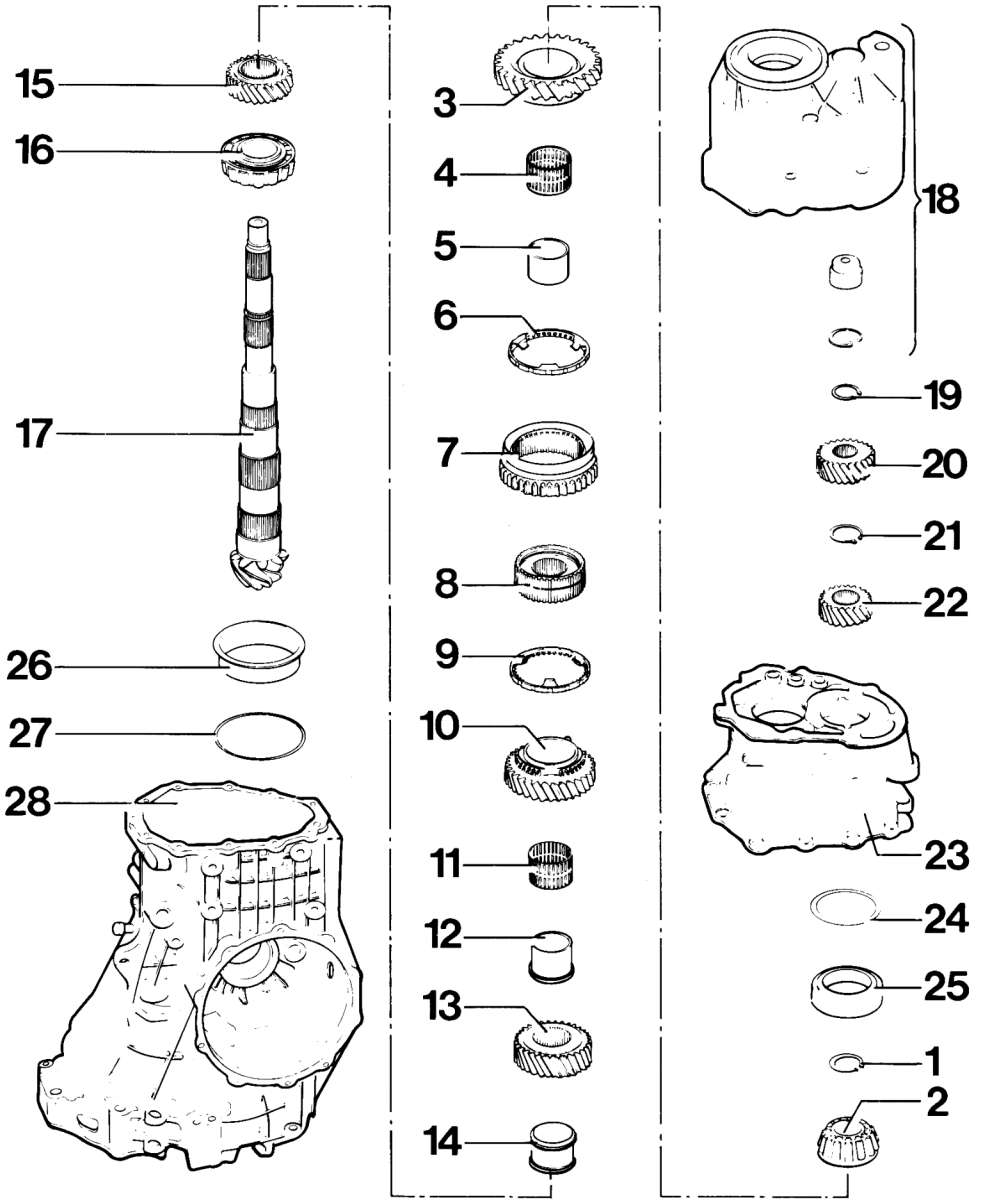

Printed in Germany – V, 1992

No.	Designation	Qty.	Note: Removal	Installation
1	Snap ring	1	Note thickness for reinstallation	Redetermine thickness if required (refer to page 34 - 17)
2	Tapered roller bearing inner race	1	Press off across 1st gear loose gearwheel (No. 3) using a suitable sep. tool (e.g. Kukko 15-17 size 2)	Heat to approx. 100°C and press on
3	1st gear loose gearwheel	1		Insert spring before fitting the gearwheel
4	Needle roller bearing	1	Mark for reinstallation	Fit with the same gearwheel as before. Oil with transmission oil before fitting
5	Bearing inner race	1	Press off across 2nd gear loose gearwheel (No. 10) using a suitable separating tool (e.g. Kukko 15-17 size 2). Mark for reinstall.	Heat to approx. 100°C and press on
6	1st gear synchronizing ring	1	Mark for reinstallation	Check for wear. Fit with the same gearwheel as bef. (Ref. to page 35 - 5)
7	Sliding sleeve	1		Install in correct position. Groove for shift fork faces 1st gear
8	Synchronizer hub	1	Press off across 2nd gear loose gearwheel (No. 10)	Heat to approx. 100°C and press on, observing correct position
9	2nd gear synchronizing ring (molybdenium-coated)	1	Mark for reinstallation	Check for wear. Fit with the same gearwheel as before (Refer to page 35 - 5)
10	2nd gear loose gearwheel	1		Insert spring before fitting gearwheel
11	Needle roller bearing	1	Mark for reinstallation	Fit with the same gearwheel as before. Oil with transmission oil before fitting
12	Bearing inner race	1	Press off across 3rd gear fixed gearwheel (No. 13), using a suitable sep. dev. (e.g. Kukko 15-17, size 2).	Heat to approx. 100°C and press on, making sure the collar faces 3rd gear fixed gearwheel

Printed in Germany – V, 1992

No.	Designation	Qty.	Note: Removal	Installation
13	3rd gear fixed gearwheel	1	Press off as for bearing inner race (No. 12)	Heat to approx. 100°C and press on, making sure the collar faces the gearwheel for 4th gear
14	Spacer sleeve	1		
15	4th gear fixed gearwheel	1	Press off with separating device (e.g. Kukko 15-17, size 2)	Heat to approx. 100°C and press on, making sure the collar faces the gearwheel for 3rd gear
16	Tapered roller bearing inner race	1	Press off with suitable separating device (e.g. Kukko 15-17, size 2)	Heat to approx. 100°C and press on
17	Drive pinion	1		Supplied in matched pairs with ring gear (drive set). When repl. the pinion, adjust drive pinion/ring gear (Refer to page 39 - 13)
18	End cover	1	Page 34 - 10	
19	Snap ring	1	Page 34 - 10	
20	5th gear fixed gearwheel	1	Page 34 - 10	
21	Snap ring	1	Page 34 - 21	
22	6th gear fixed gearwheel	1	Page 34 - 21	
23	End shield	1	Page 34 - 21	
24	Adjusting shim "S4"	X	Page 34 - 32	
25	Tapered roller bearing outer race	1	Page 34 - 32	
26	Tapered roller bearing outer race	1	Page 34 - 38	
27	Adjusting shim "S3'"	X	Page 34 - 38	
28	Transmission housing	1	Page 34 - 38	

Note

If components No. 4, 5, 8, 11, 12, 13, 14 and 15 have been replaced, the thickness of shim "S4" must be recalculated (Refer to page 34 - 29)

Printed in Germany – V, 1992

Removing and installing differential

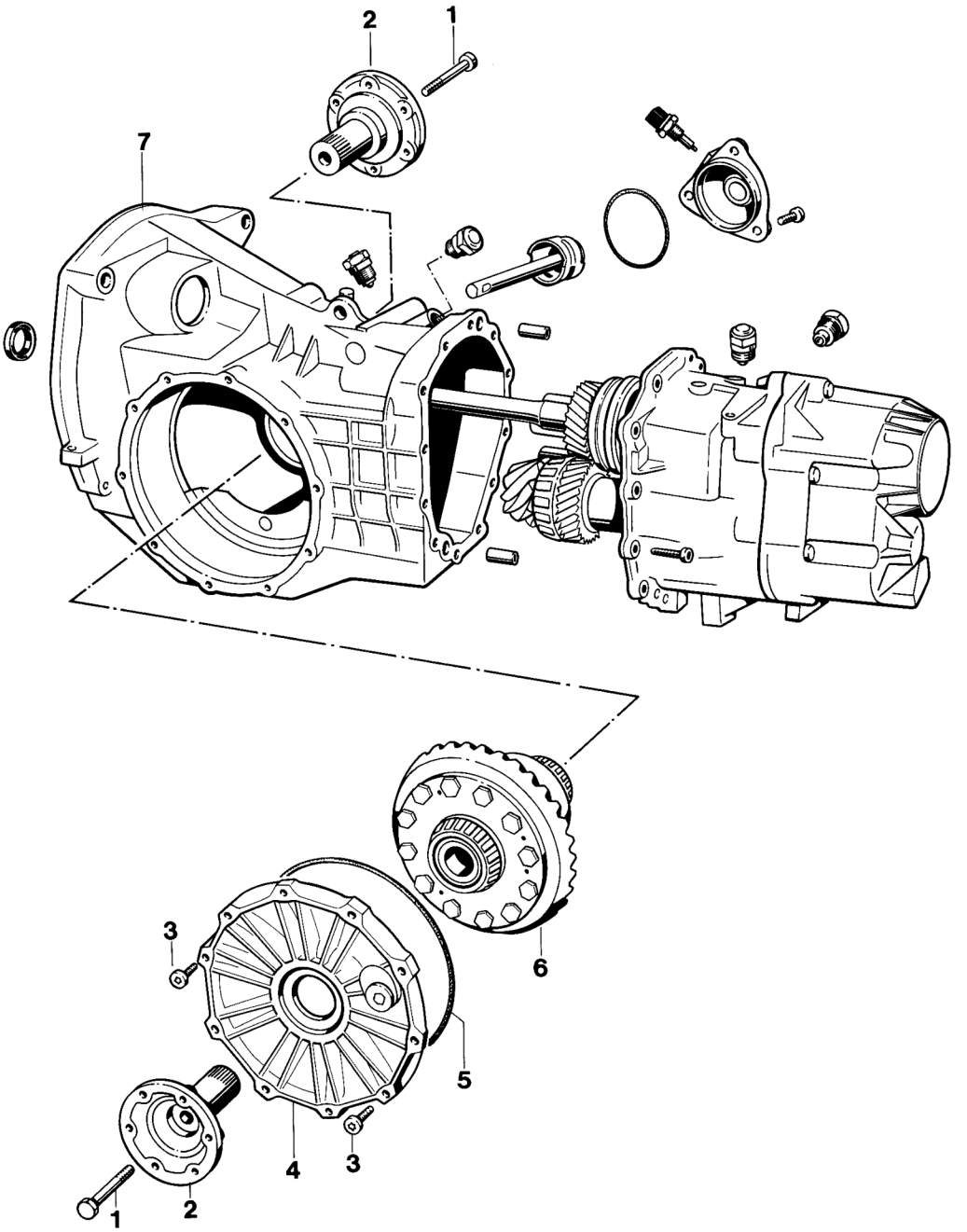

Printed in Germany – V, 1992

No.	Designation	Qty.	Note: Removal	Installation
1	Hexagon head bolt	2		44 Nm (32 ftlb)
2	Joint flange	2		
3	Bolt	10		Tighten to 25 Nm (18 ftlb)
4	Cover	1		
5	Sealing ring	1		Replace
6	Differential	1		Readjust if required (refer to page 39 - 21)
7	Transmission housing	1		

Note

The differential may be removed and installed without removing the gearshift shaft and gear set

Printed in Germany – V, 1992

Dismantling and assembling differential

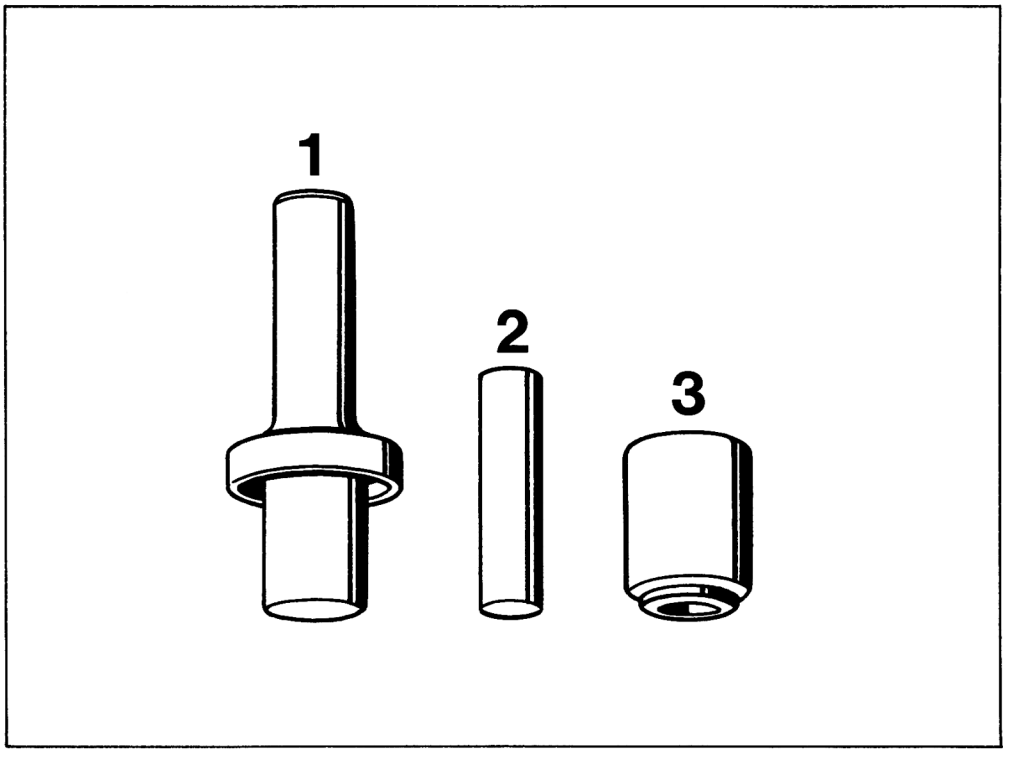

No.	Designation	Special tool	Order number	Explanation
1	Thrust piece	P 264 b	000.721.264.20	
2	Centering mandrel	9289	000.721.928.90	
3	Thrust piece	P 263	000.721.263.00	

Printed in Germany – V, 1992

Dismantling and assembling differential

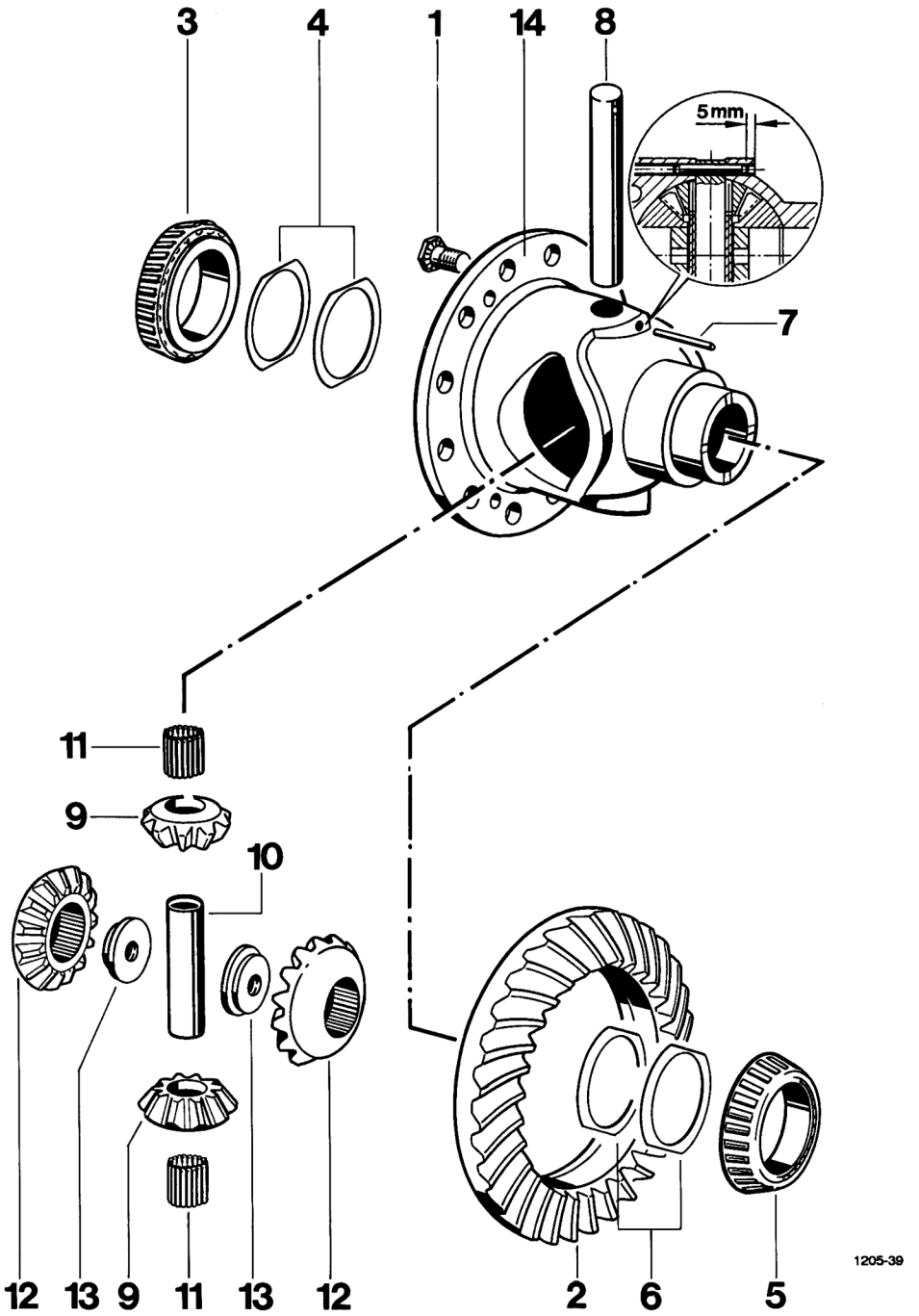

Printed in Germany – V, 1992

No.	Designation	Qty.	Note: Removal	Installation
1	Ring gear bolt (Verbus Ripp bolt)	12		Always replace with new bolt. Threads must be dry and free from grease. Tighten to 200 Nm (148 ftlb)
2	Ring gear	1		Threaded holes for ring gear bolts must be dry and free from grease. Observe matching number. Readjust if required
3	Tapered roller bearing inner race	1	Pull off with suitable puller and P 263	Press on with P 264 b
4	Adjusting shim	X	Mark for reinstallation	Redetermine thickness if required
5	Tapered roller bearing inner race	1	Pull off with suitable puller and P 263	Press on with P 264 b
6	Adjusting shim	X	Mark for reinstallation	Redetermine thickness if required
7	Spiral pin	1		Drive in to correct position
8	Pin	1		
9	Small differential gear	2		Coat semi-circular surface with MoS2 paste. Replace only as a set (with large differential gears)
10	Spacer sleeve	1		
11	Roller insert (31 individual needle rollers each)	2	Be careful not to lose any needle rollers	Insert with stiff grease
12	Large differential gear	2		Coat semi-circular surface with MoS2 paste. Replace only as a set (with small differential gears)
13	Threaded insert	2		
14	Housing	1		

Printed in Germany – V, 1992

Dismantling and assembly notes

Note

The small differential gears are supported by two roller inserts consisting of 31 individual needle rollers each.

Dismantling

1. Press out pin with centering mandrel **9289**.

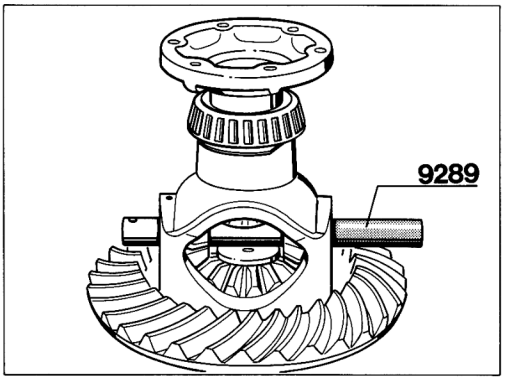

539-39

2. Use centering mandrel to turn small differential gears towards the housing openings and take them out carefully. Be careful not to lose any needle rollers.

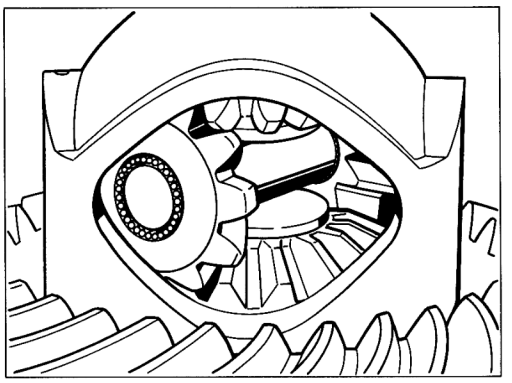

540-39

Assembly

1. Insert large differential gears with pressed-in threaded washers across the large aperture in the differential housing and locate them with the joint flanges.

2. Preassemble a small differential gear with 31 needle rollers, centering mandrel **9289** as well as the spacer sleeve and insert across one of the openings in the housing.

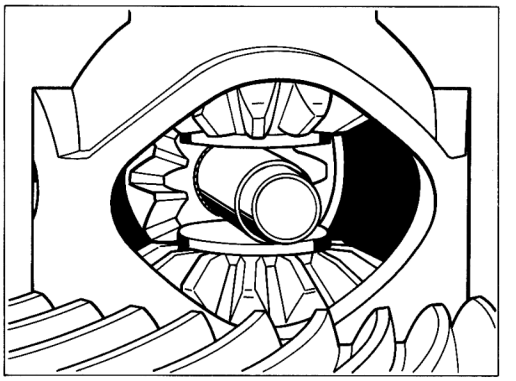

541-39

3. Assemble second differential gear with 31 needle rollers and push carefully onto the centering mandrel. Be careful not to lose any needle rollers.

Note

To facilitate assembly, apply stiff grease to needle rollers prior to inserting them.

Printed in Germany – V, 1992

4. Turn small differential gears with centering mandrel until the bores in the housing line up.

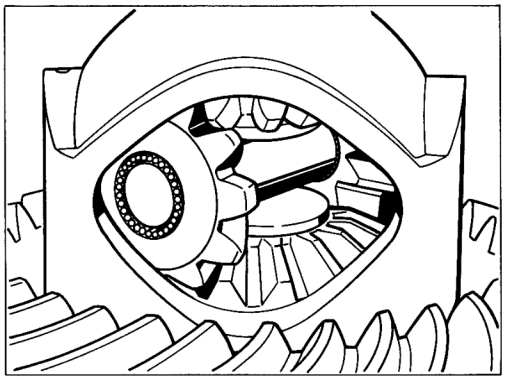

540-39

5. Press in differential pin until it is seated in correct position, take off centering mandrel and lock pin according to specifications.

Printed in Germany – V, 1992

Adjusting drive set

Tools

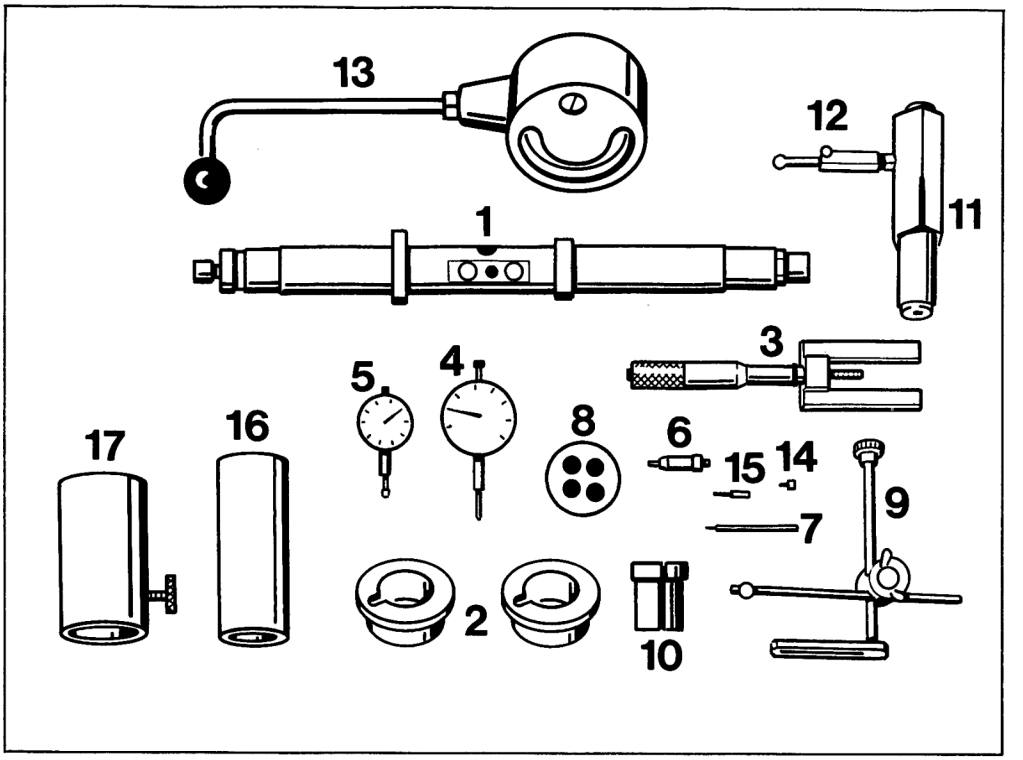

1222-39

Printed in Germany – V, 1992

Adjusting drive set

Tools

No.	Designation	Special tool	Order number	Explanation
1	Measuring mandrel	VW 385/1		
2	Centering sleeves	9109	000.721.910.90	
3	Master gauge	VW 385/30		
4	Dial gauge	-		commercially available
5	Dial gauge	-		commercially available, measuring range 3 mm
6	Gauge plunger	VW 385/14		
7	Dial gauge extension	VW 385/56		Length 30 mm
8	Gauge block plate	VW 385/17		
9	Dial gauge bracket	VW 387		
10	Clamping sleeve	9145		000.721.914.50
11	Adjusting device	VW 521/4		
12	Measuring lever	VW 388		
13	Torque gauge	-		commercially available 0...600 Ncm
14	Dial gauge extension	VW 382/10		Length 6.0 mm
15	Dial gauge extension	9150	000.721.915.00	Length 20 mm
16	Pipe section	VW 418a		
17	Clamping device	VW 548		

Printed in Germany – V, 1992

Adjusting drive set

General

The setting of drive pinion and ring gear is a determining factor for the service life and smooth running of the rear-axle drive. Drive pinions and ring gears that have been checked for good tooth contact pattern and low noise in both directions of rotation on special test equipment are therefore matched during production. The position at which smoothest running can be achieved is determined by shifting the drive pinion axially, with the ring gear being kept within the tolerance of the prescribed tooth backlash. The deviation „r" from the specified design dimension "Ro" is determined and is engraved on the outer circumference of the ring gear. Ring gear and drive pinion have been designed in such a manner that the deviation „r" always adds to the design dimension "Ro", i.e. it has a positive sign.

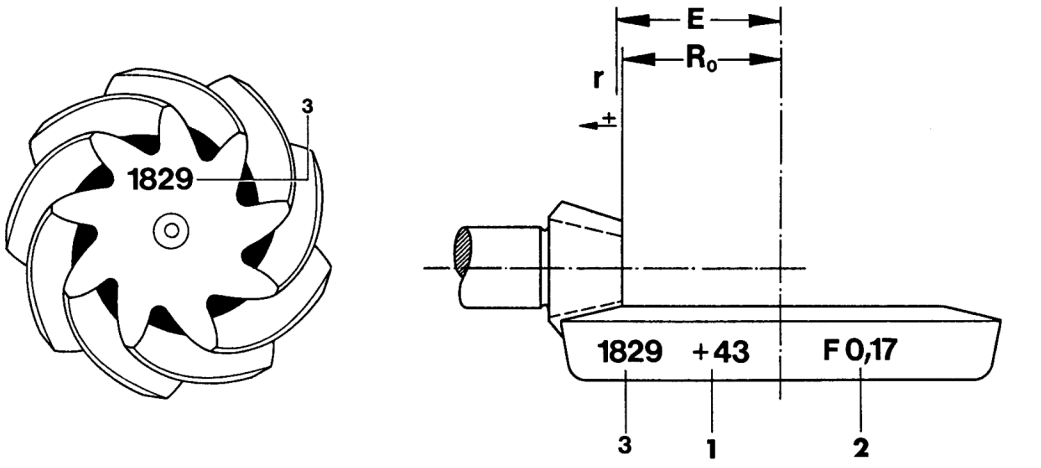

Ro = Design dimension (69.65 mm)
r = Deviation „r"
1 = Deviation "r" (is always indicated in 1/100 mm. Example: +43 means „r" =0.43 mm)
2 = Tooth backlash (e.g. 0.17 mm)
3 = Matching number
E =Setting (actual dimension between ring gear axis and face of the drive pinion at the point of smoothest running for this particular drive set) E =Ro + r

Printed in Germany – V, 1992

Adjustment overview

When assembling the transmission, the drive pinion and ring gear or drive set only require adjustment if parts have been replaced which have a direct influence on the setting of the final drive. Refer to the following table to avoid unnecessary adjustment procedures:

Adjust: / Replaced component:	Ring gear (S1 + S2)	Drive pinion via deviation „r“	Drive pinion adjusting shim "S4"
Transmission housing	X	X	
End shield			X
Differential housing	X		
Tapered roller bearing for drive pinion		X	
Tapered roller bearing for differential	X		
Drive set	X	X	
Cover for final drive	X		
Needle roller bearing for 1st gear			X
Synchronizer hub for 1st and 2nd gear			X
Needle roller bearing for 2nd gear			X
3rd gear gearwheel			X
Spacer sleeve			X
4th gear gearwheel			X

Printed in Germany – V, 1992

Practical procedure when readjusting the drive set

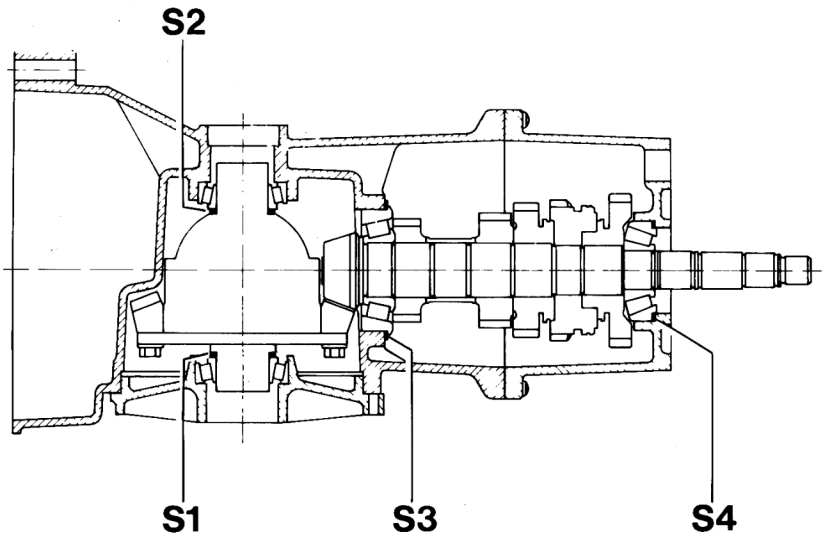

1206-39

S1 = Ring gear adjustment shim

S2 = Ring gear adjustment shim

S3 = Drive pinion adjustment shim

S4 = Drive pinion adjustment shim

If it becomes necessary to adjust drive pinion and ring gear, follow the below sequence to ensure an efficient working procedure:

1. Determine the total shim thickness "Stot" (S1 plus S2) for the specified preload on the tapered roller bearings/differential.

2. Determine the total shim thickness "Stot" (S3 plus S4) for the specified preload of the tapered roller bearings/drive pinion.

3. Split total shim thickness "Stot" into S3 and S4 in such a manner that the dimension from the center of the ring gear to the face of the drive pinion corresponds to the installation dimension "E" determined during manufacture.

4. Split total shim thickness "Stot" into S1 and S2 so that the specified circumferential backlash is present between ring gear and drive pinion.

The aim of this adjustment is to restore the smoothest running position which has been achieved on test equipment in the production line.

To achieve correct results, greatest possible cleanliness for all assembly work and measuring procedures is essential.

Printed in Germany – V, 1992

Adjusting drive pinion

Determining total shim thickness „Stot" (S3 plus S4)

(Adjusting preload of tapered roller bearings/drive pinion).

1. Fit tapered roller bearing outer races **without** adjustment shims into the transm. housing and into the end shield, respectively.

2. Insert fully assembled drive pinion. Place end shield into position and tighten bolts to 25 Nm (18 ftlb).

3. Fit measuring tools. Set dial gauge (3 mm measuring range) to zero at a preload of 1 mm. Length of dial gauge extension is approx. 30 mm.

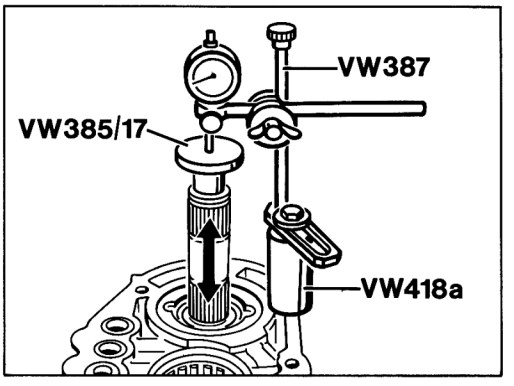

1193-39

Note

Before carrying out measurements, rotate drive pinion in both directions to allow the tapered roller bearings to settle.

4. Move drive pinion up and down. Read off backlash at dial gauge and record backlash. Do not rotate the drive when moving it up and down as this may give faulty readings. Example: 1.40 mm.

5. Remove end shield again.

Determining total shim thickness "Stot" (S3 plus S4)

Stot	= Measuring dimension + Pressure
Pressure	= 0.20 mm (constant value)
Measuring value	= 1.40 mm (Example)
Stot	1.60 mm

Determining dimension "e"

1. Insert shims to the determined total shim thickness (1.60 mm for our example) behind the tapered roller bearing outer race into end shield (S4 side). Refit end shield again, tighten bolts and rotate drive pinion into both directions to allow the tapered roller bearings to settle.

2. Set adjustment ring of measuring mandrel VW 385/1 to dimension "a".

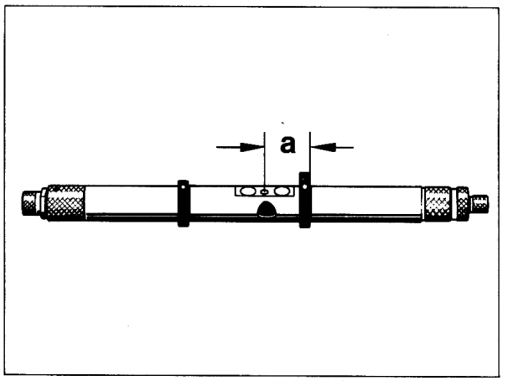

223-39

A = approx. 68 mm

Printed in Germany – V, 1992

3. Assemble measuring mandrel acc. to figure.

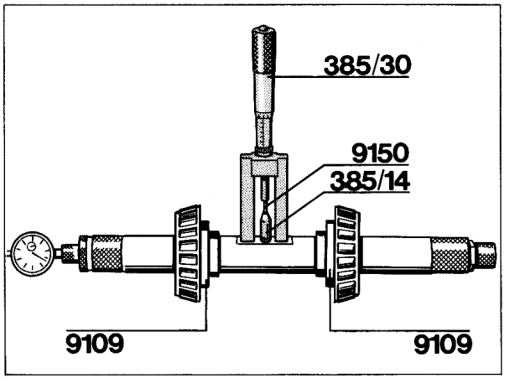

543-39

4. Use dial gauge extension 9150 = 20 mm length.

5. Set master gauge to dimension
Ro = 69.65 mm
and place onto measuring mandrel. Set dial gauge (3 mm measuring range) to zero at a preload of 1 mm.

6. Turn back moving adjustment ring until it is seated against the stop.

7. Place gauge block plate VW 385/17 onto drive pinion head and insert measuring mandrel into transmission housing. Dial gauge extension rests in the gauge block plate area.

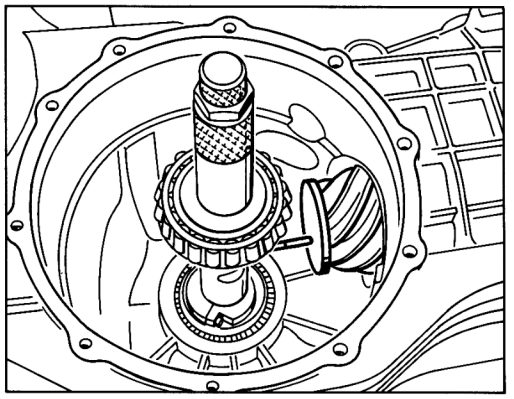

9. Fit final drive cover carefully (do not tap as this may cause the gauge block plate to slide off) and tighten with 4 bolts.

10. Pull second centering sleeve outwards across moving adjustment ring until the measuring mandrel can just about be turned.

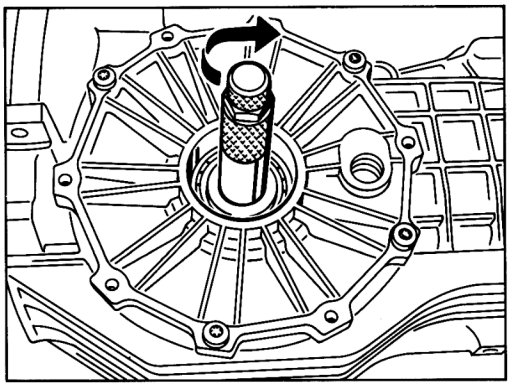

1203-39

11. Turn measuring mandrel carefully until the dial gauge extension is vertical to the face of the drive pinion head. At this point, the pointer of the dial gauge is at its maximum deflection (reversing point) and the dial gauge must now be read.
The measured value corresponds to dimension „e".
Example: 0.46 mm

Determ. thickness of adjustment shim „S3"

S3 = e + r

e = Determined value
(max. dial gauge deflection)

r = Deviation (indicated in 1/100 mm on the ring gear, e.g. 43)

Example:

Reading on dial gage "e"	0,46 mm
Deviation "r" inscribed on ring gear	+ 0,43 mm
Thickness of shim "S3"	0,89 mm

S3 shims available as spare parts:
Thickness in mm
0,45 - 0,50 - 0,55 - 0,60 - 0,65 - 0,70 - 0,75 - 0,85

Note

The tolerances of the adjustment shims allow any thickness to be measured for "S3". Measure shims at several points using a micrometer. Also check shims for burrs or any defects.

Fit only shims in perfect condition!

Determining the thickness of adjustment shims "S4"

S4 = Stot - "S3"

Example:

Total shim thickness	1,60 mm
Shim thickness S3	- 0,89 mm
Shim thickness S4	0,71 mm

S4 shims available as spare parts:
Thickness in mm
0,45 - 0,50 - 0,55 - 0,60 - 0,65 - 0,70 - 0,75 - 0,80 - 0,85 - 1,25

Measure shims at several points using a micrometer. Also check shims for burrs or any defects.

Fit only shims in perfect condition!

Checking dimension "E"

1. Fit drive pinion with measured adjustments shims "S3" and "S4" and rotate several times in both directions.

2. Insert universal measuring mandrel and check the dimension.

3. If the correct adjustment shims have been fitted, the dial gage, read off counterclockwise, must indicate the inscribed deviation "r" with a tolerance of ± 0.04 mm.

Printed in Germany – IX, 1993

Adjusting ring gear

Determine total shim thickness "S tot" ($S_1 + S_2$).

The ring gear must be readjusted if the

transmission housing,
transmission side cover,
tapered roller bearings for differential,
differential housing or drive set
have been replaced.

Note

The drive pinion must be removed in order to determine the preload of the differential tapered roller bearings.

1. Make sure the bearing outer races of the tapered roller bearings are well seated in the transmission housing or transmission side cover, respectively.

2. Fit one 2.5 mm spacer both on the ring gear side of the differntial to be used as well as on the opposite side.

3. Place differential into transmission housing and rotate repeatedly.

4. Fit transmission side cover without seal and tighten all bolts to 25 Nm.

5. Place gauge block plate **VW 385/17** on the collar of the differential.

6. Fasten universal dial gauge holder **VW 387** with dial gauge and extension to the housing and set to zero with 2 mm preload.

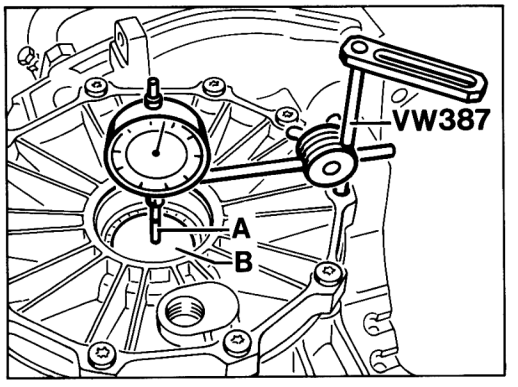

1192-39

A = Dial gauge extension (approx. 30...40 mm long)
B = Gauge block plate VW 385/17

7. Move differential up and down. Read off backlash on the dial gauge and note.

Note

Do not turn differential while measuring backlash as this will give an incorrect reading.

8. Calculate "S tot".
   "S tot" = thickness of inserted shims
   + measured value
   + pressure fit of tapered roller bearings

Example

Thickness of inserted shims	5.00 mm
Measured value	0.90 mm
Pressure fit (constant value)	0.25 mm
"S tot"	6.15 mm

Printed in Germany – V, 1992

9. Remove differential, pull off both tapered roller bearings and distribute calculated shim thickness "S tot" as follows.
   As a start for backlash adjustment, the thickness of spacer S_1 is reduced by 0.70 mm while the thickness of spacer S_2 is increased by 0.70 mm.

Example

Total shim thickness of spacers
$S_1 + S_2 = 6.15$ mm

Thickness of spacer S_1

$$\frac{6.15 \text{ mm}}{2} = 3.075 \text{ mm} - 0.700 \text{ mm} = 2.375 \text{ mm}$$

Thickness of spacer S_2

$$\frac{6.15 \text{ mm}}{2} = 3.075 \text{ mm} + 0.700 \text{ mm} = 3.775 \text{ mm}$$

Note

The spacers are available in thicknesses of 1.6...3.1 mm in increments of 0.10 mm.

A 0.25 mm shim allows the ring thicknesses to be selected in increments of 0.05 mm.

The shim thicknesses calculated must be rounded up or down for plausible dimensions that will not alter the total shim thicknesses S_1 and S_2.

Example:

Calculated ring thicknesses

$S_1 + S_2 = 2.375 + 3.775 = 6.15$ mm

Rounded down ring thicknesses

$S_1 + S_2 = 2.35 + 3.80 = 6.15$ mm

Measure shims in several places using a micrometer. Admissible deviation is 0.02 mm. Also check shims for burrs and damage.

Adjusting circumferential backlash

Note

The backlash to be set is engraved on the ring gear.

1. Fit drive pinion using shims „S3" and "S4".

2. Fit differential with tapered roller bearings into housing, inserting the spacers (S_1 + S_2) determined before.

3. Fit transmission side cover and tighten all mounting bolts to **25 Nm**.

Note

Always make sure that there is a certain amount of backlash when tightening the bolts. Never allow the drive pinion to bind.

4. Assemble measuring lever **VW 388** and adjusting device VW 521/4 and adjust lever length to 80 mm with the plunger. Refer to dimension "a" in the figure.

5. Insert adjusting device with clamping sleeve (Special Tool 9145) into the differential and clamp firmly.

6. Rotate differential in both directions several times to allow the tapered roller bearings to settle.

7. Fit universal dial gauge holder with flat extension in such a way as to produce a right angle between dial gauge axis and lever.

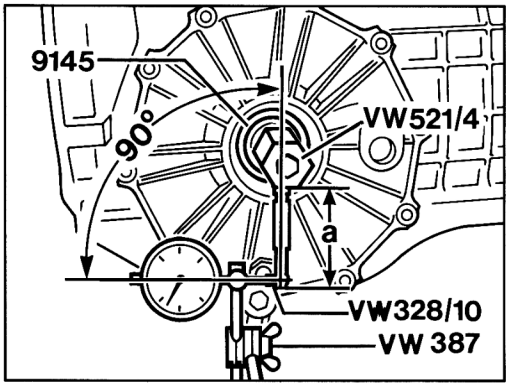

1202-39

Dimension "a" = approx. 80 mm

8. Turn ring gear carefully at the clamping screw of the adjusting device up to the stop and set the dial gauge to zero. Turn back ring gear and read off circumferential backlash. Note the reading.

9. After turning the ring gear another 90° each, repeat measuring procedures three times. The measured values must not deviate from one another by more than 0.05 mm.

Note

The backlash to be adjusted is engraved on the ring gear. The actual value may be less than the specified value by - 0.05 mm. Under no circumstances must the backlash be greater than the specified value.

10. If the required backlash cannot be obtained, replace spacers (S_1 + S_2) again. The total shim thickness (S tot) must not be altered, however.

Printed in Germany – V, 1992

page

General

Technical Data . . . . . 32 - 0201

Clutch, autom. torque converter

Removing and installing the torque converter . . . . . 32 - 201
Removing and installing the rotary shaft seal for the torque converter . . . . . 32 - 203

Automatic Transmission, Operation, Housing

Removing and installing transmission . . . . . 37 - 201
Keylock and Shiftlock Check Points / Adjustment operations . . . . . 37 - 205
Shiftlock - Emergency operation . . . . . 37 - 209
Removing and installing multi-function switch to transmission . . . . . 37 - 211
Adjusting bowden cable for selctor device . . . . . 37 - 213

Automatic Transmission, Gears, Controls

Checking the ATF level . . . . . 38 - 201
Changing the ATF level . . . . . 38 - 203
Flushing ATF radiator and piping system . . . . . 38 - 204a
Removing and installing inductive engine speed pickup . . . . . 38 - 205
Removing and installing hydraulic control unit . . . . . 38 - 207
Removing and installing transmission wiring harness . . . . . 38 - 211
Removing and installing solenoid . . . . . 38 - 213
Removing and installing piston for brake band C' . . . . . 38 - 215
Removing and installing spacer . . . . . 38 - 217
Removing and installing spacer seals . . . . . 38 - 219
Checking end play . . . . . 38 - 221
Removing and installing ATF pump . . . . . 38 - 223
Dismantling and assembling ATF pump . . . . . 38 - 229

Differential / Transaxle System

Changing the transmission oil in rear-axle drive . . . . . 39 - 201
Removing and installing spur gear drive . . . . . 39 - 203
Replacing gasket between housing and housing flange of spur gear drive . . . . . 39 - 205
Removing and installing output shaft . . . . . 39 - 207
Removing and installing differential . . . . . 39 - 211

Diagnosis

Diagnosis Tiptronic / Troubleshooting . . . . . D37/38 - 201
Troubleshooting mechanical / hydraulic section . . . . . D38 - 201

Printed in Germany - XII, 1994

Technical Data

4-Speed Tiptronic Transmission A44

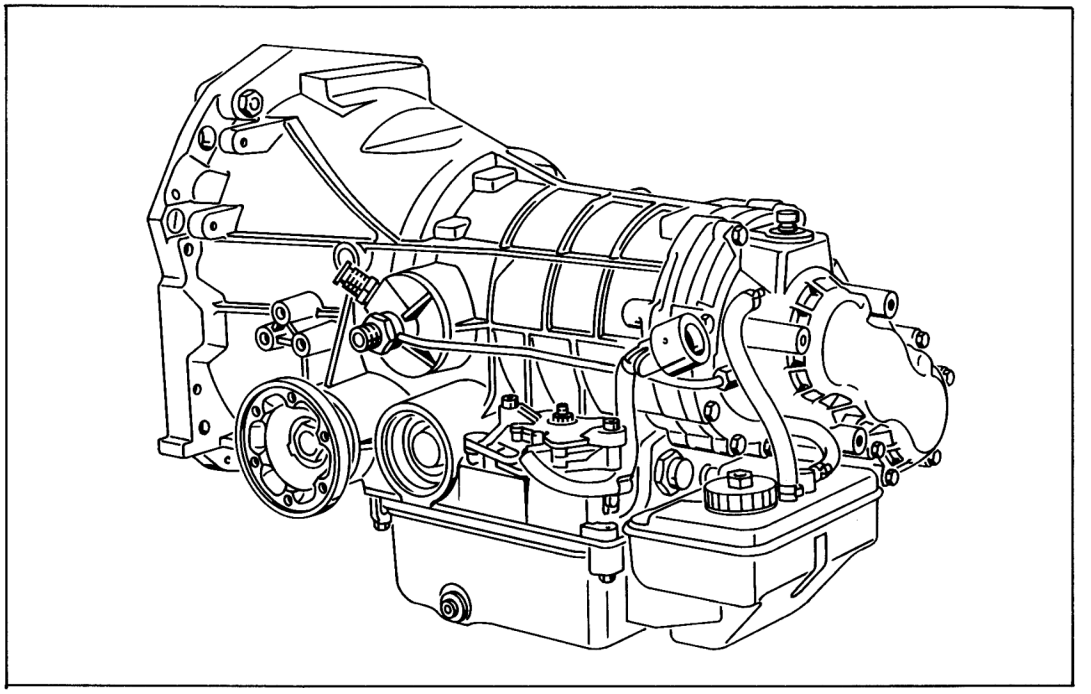

1264-32

Type	Code letter	Equipment	Installed	Model Year
A44/00		4-Speed	968 worldwide	as of MY '92

Printed in Germany – VII, 1992

Technical Data

General Data	A 44/00
Design	Fully automatic 4-speed planetary transmission (Tiptronic)
Transmission ratios	
Spur gear drive	1.22
1st gear	2.579
2nd gear	1.407
3rd gear	1.000
4th gear	0.742
Reverse	2.882
Final drive	Hypoid bevel-gear drive with 10 mm offset
Final drive transmission ratio	39 : 12 i = 3.25
Stall speed	2,700 - 400
Rear-axle final drive capacity	approx. 0.7 l multigrade transmission oil 75 W 90 to API specification GL5 (**MIL-L 2105 B**). Optionally SAE 90
Capacity: Automatic section including converter	Total capacity approx. 7.0 l Change quantity approx. 3.0 l ATF-Dexron II D

Printed in Germany – VII, 1992

Technical Data

Tightening torques for Tiptronic transmission

ILocation	Thread	Tightening torque Nm
Multi-function switch to transmission	M 6	10 (7 ftlb)
Operating lever to selector shaft	M 8 x 1	15 (11 ftlb)
Lock nut to ball socket	M 5	5 (4 ftlb)
Inductive pickup to transmission cover	M 18 x 1.5	30 (22 ftlb)
Plug for ATF quick-fill connection	M 14 x 1.5	30 (22 ftlb)
Plug for ATF pan	M 10 x 1	15 (11 ftlb)
ATF pan to transmission	M 6	6 (4 ftlb)
ATF filter to hydraulic control unit	M 6	8 (6 ftlb)
Hydraulic control unit to transmission	M 6	8 (6 ftlb)
Valve housing to hydraulic control unit	M 5	6 (4 ftlb)
Solenoids to hydraulic control unit	M 5	5 (4 ftlb)
Hexagon nuts to transmission socket	M 26 x 1	20 (15 ftlb)
ATF spray line to transmission	M 12 x 1.5	35 (26 ftlb)
Spur gear drive to transmission housing	M 8	23 (17 ftlb)
Housing flange to housing (spur gear drive)	M 6	8 (6 ftlb)
Oil drain plug (rear axle final drive)	M 16 x 1.5	40 (30 ftlb)
Oil filler plug (rear axle final drive)	M 18 x 1.5	50 (37 ftlb)

Printed in Germany – VII, 1992

Technical data

Tightening torques for central tube and transmission suspension (Tiptronic) and ATF pipes

Location	Thread	Tightening torques Nm (ftlb.)
Damper element to central shaft (clamping screw)	M 10	80 (59)
Torque converter mount to central shaft (clamping screw)	M 10	80 (59)
Clutch housing to central tube flange	M 10	42 (31)
Damper element to flywheel	M 8	21 (15.5)
Torque converter to drive plate	M 10	76 (56)
Transmission to central tube	M 10	42 (31)
Torque converter mount to central tube housing	M 8	21 (15.5)
Clutch housing to engine	M 12	75 (55)
Transmission support to body	M 10	46 (34)
Transmission mount to bracket (collar screw without washer, property class 10.9)*	M 10	65 (48)
Transmission mount to transmission support	M 8	23 (17)
Bracket to transmission case	M 8	23 (17)
ATF pipes at auxiliary ATF cooler (clamp fitting)	M 8	20 (15)
ATF pipes at transmission and ATF cooler (union nut)	3/4 UNF-16	24 (17.6)

* see Technical Information 1/93

Printed in Germany - XII, 1994

Diagnosis Tiptronic / Troubleshooting

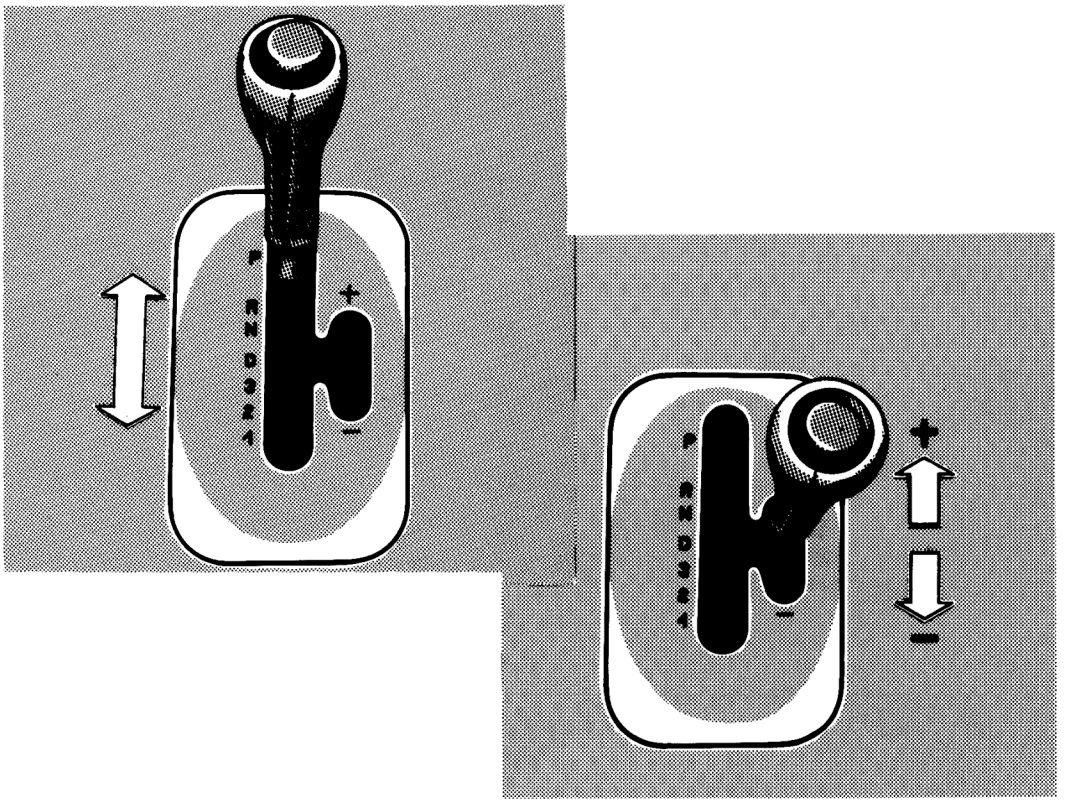

Printed in Germany, IX – 1993

Fault overview / Contents

Software level G20

Test point	Fault code	Item	Results of fault	Page
		General		204
		Connector layout		212
0		Diagnosis connector		213
1		Supply voltage (Term. 30)	No display	216
2	11	Voltage → control unit (Term. 15)	Emerg. operation, no display	216
3	13	Voltage → drive links	Emergency operation	217
4	14	Voltage → sensor, (5 V)	No upshift prevention	217
5	21	Rpm signal ← DME CU	Emergency operation	218
6	22	Load signal ← DME CU	Emergency operation	219
7	24	Change of ignition timing	Emergency operation	220
8	25	Throttle plate signal ← DME CU	Replacement value 36 %	221
9	31	Solenoid valve 1	Emergency operation	222
10	32	Solenoid valve 2	Emergency operation	223
11	34	Pressure regulator	Emergency operation	223
12	35	Transmission gear selection switch	Emergency operation	224
13	36	Speed sensor	Emergency operation	226
14	37	Transmission temperature sensor	Replacement value 60° C	227
15	38	Transmission gear selection switch (for starting)	Emergency operation	228
16	39	Solenoid valve 3	Emergency operation	229
17	40	Solenoid valve 4	Emergency operation	229
18	42	Control unit faulty	Emergency operation	230
19	43	Control unit faulty	Emergency operation	230
20	44	Control unit faulty	Emergency operation	230
21	45	Downshift fault	Emergency operation	230
22	46	Rev. limiter	Emergency operation	230
23	48	Gear sel. monitor	Emergency operation	231
24	51	Manual program switch	No manual program	231
25	52	Tip-switch up/down shift	No manual program	231
26	53	Kickdown shift	No kickdown	232
27	54	Transverse acceleration sensor	No upshift prevention	232
28	55	Speed signal 1 ← ABS CU	No upshift prevention no manual program	233
29	56	Combi-instrument input	Fault memory	233
30	57	Oil cooler blower relay	Fault memory	234
31	xx	Unknown DTC	Fault memory	234

Printed in Germany, IX – 1993

This is how the information is processed in the Tiptronic control unit

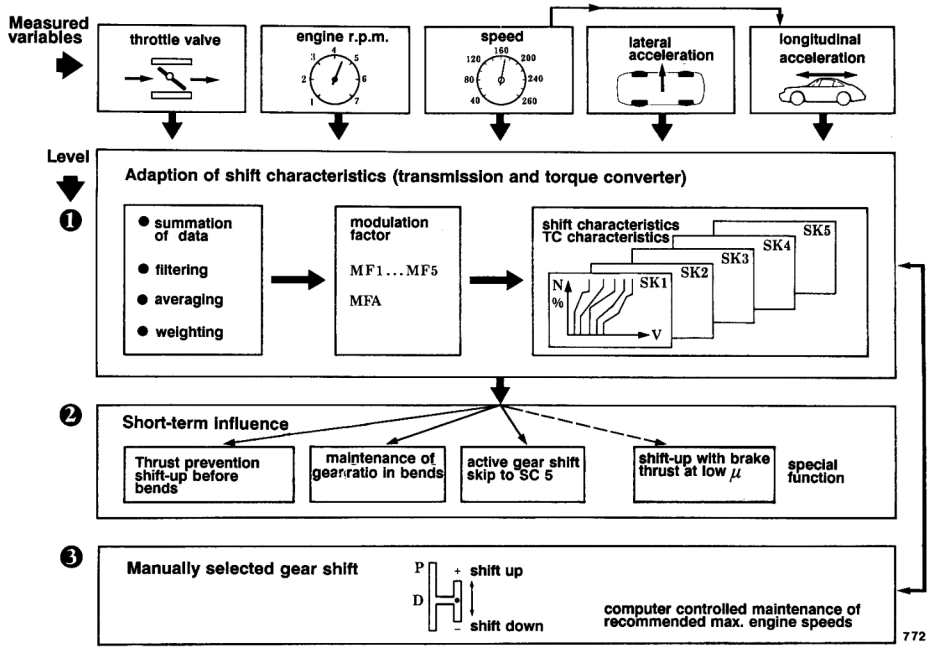

The Tiptronic control unit is located in the luggage compartment, on the right side.

The following parameters are constantly supplied to the Tiptronic control unit:

Parameter	Type of measurement
• Throttle position	Potentiometer resistance
• Throttle actuation speed	Time for change of resistance at potentiometer
• Engine speed	Frequency measurement (from DME)
• Driving speed	No. of pulses at pole wheel of transmission shaft
• Vehicle transverse acceleration	Signal from transverse acceleration sensor below the right-hand seat
• Vehicle axial acceleration/deceleration	Change of no. of pulses within clock time

The above values are determined several times per second and are processed in the control unit.

By comparing those measurements with the stored programs, factors are generated that cause the transmission to enter or to shift into one of the five shift curves.

The automatic shift strategy of the Porsche Tiptronic

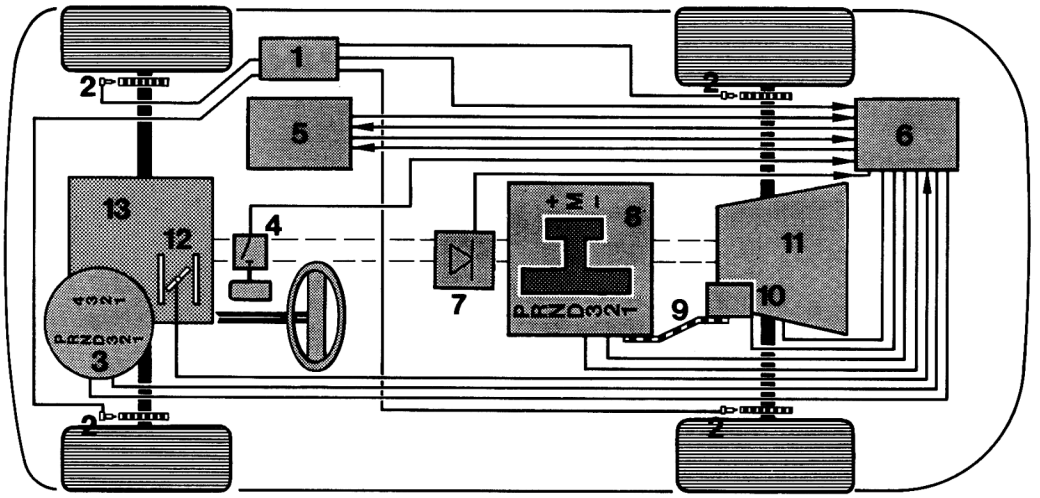

1428-37/38

1 ABS control unit
2 ABS sensors at wheels
3 Speedometer
4 Kickdown switch
5 DME control unit
6 Tiptronic control unit
7 Transverse acceleration sensor
8 Selector lever system with two gates
9 Cable
10 Position switch
11 Automatic transmission
12 Throttle with potentiometer
13 Engine

The Tiptronic control unit (6) is the information and command center of the entire system. A large quantity of **information inputs** that are compared with the stored **driving or gearshift programs** is used to generate **commands** that **cause the transmission** to **execute** or **not to execute** gearshifts.

Start of diagnosis

To assess a Tiptronic transmission for which complaints have been received, the information about the fault and the fault occurrence should be as complete as possible.
To avoid extra damage during test drives or faulty diagnosis results, the following items must be checked and corrected (if required) prior to the test drive:

1. Read out fault memory with System Tester 9288 and correct fault.
   Battery, connectors, ground points O.K.
2. External damage, leaks at transmission (ATF leaks) or final drive (hypoid oil loss), disconnected cables.
3. ATF level in transmission correct, fluid is **neither dirty nor does it leave a burning smell.** If ATF is dirty or if it leaves a burning smell, it is recommended to replace the Tiptronic transmission if complete removal of the dirt residues cannot be ensured. In addition, the coolant lines and the cooler must be flushed.
4. Engine operation, full opening of throttle when accelerator is in full-throttle position.

Notes:
If a system fault occurs, the Tiptronic system shifts into a reduced driving program. The warning lamp comes on and the automatic system shifts to 4th gear, irrespective of the selector lever position.
As 4th gear establishes a rigid connection between engine and final drive, you must shift to "N" at a speed of about 30 kph to prevent the engine from stalling. When the vehicle has stopped, turn the engine off.
When you start the engine again, only 2nd gear and reverse are available.
Caution: The reverse gear interlock monitor is inoperative.
Do not shift into "R" while the vehicle is in motion.

The test drive

The test drive should be used to check if the customer complaint situations actually occur when the vehicle is driven. It is actually preferrable to have the customer drive the car and to check for any potential faults, malfunctions or even for incorrect operation by the driver.

Check all functions of the transmission during the test drive:
—All shifts, including in kickdown position in the automatic gate, as well as shifts in the manual gate

—Various driving speeds

—Driving in reverse (uphill if possible)

—Stall speed

Make your diagnosis using the "Troubleshooting the Tiptronic transmission" section and determine the type of repair required.

This diagnosis plan is based on the fault memory contents. If no fault is stored although a malfunction is present, the troubleshooting plan for the mechanical/hydraulic section should be used.

Troubleshooting requires that the person performing the tests

- is familiar with the location of components, operation and technical relationships of the systems being tested (refer to Model Information)
- is able to read and evaluate Porsche wiring diagrams
- knows the functions of circuits and relays
- is capable of using testers such as oscilloscope, voltmeter, ohmmeter and ammeter, as well as of evaluating the test results.

Important:

The fault text displayed does **not** necessarily indicate a defect in this component, but may also refer to a fault in the corresponding control unit and the wiring (paths) between the component and the control unit.

Before reading out the fault memory, do not try to locate faults by disconnecting plugs etc. while the engine is running as this may be stored as a fault in the fault memory.

Note for System Tester 9288

If the tester display shows

Fault not present, this may indicate:

- Fault did not exist at the time of testing (e.g. in the case of loose connections)
  Remedy: Visual inspection of path
- In addition, in the case of a loose connection, the + symbol is displayed.
  Ex.: **... not present +**
  Remedy: Visual inspection of path
- The conditions under which the fault is tested do not correspond to the conditions under which the fault occurred.
  Remedy: Conform with the conditions displayed on the tester

Signal unplausible:

The signal of the monitored component is not within the tolerance range of the value preset in the control unit.

Notes on the counter shown on the tester display

The first time a malfunction occurs, the counter is always set to 50. If the value is lower than 50, the difference between 50 and the value shown is the number of starts with the test condition fulfilled and without errors. When the value reaches zero, the error path is deleted in the control unit.
If the error occurs again when the counter is less than 50, the counter is again set to 50. If the counter is above 50, the difference between the number shown and 50 is the number of loose contacts which have occured. Even if the figure shown is above 50, the counter is still reduced by 1 until it reaches zero for each start with the test conditions fulfilled.

Printed in Germany, IX - 1993

Diagnosable Tiptronic control unit

A self-diagnosis feature with fault memory is built into the Tiptronic control unit to allow certain faults within the electronic control system of the Tiptronic to be detected and to be stored.

To prevent detected and stored faults from being erased when the ingition is switched off, a permanent positive voltage is present at the control unit. Detected faults remain stored in the fault memory for at least 50 starts of the engine.

Caution:

If the connector is pulled off the Tiptronic control unit or if the battery is disconnected, the fault memory is erased.

A maximum of 5 faults can be stored in the control unit.

Tester connections

To run the diagnosis, the vehicles are fitted with a 19-pin connector in the passenger footwell.

This connector allows System Tester 9288 to be connected. Operation of the tester is described in the tester instruction manual.

Note

The relevant test point is complemented by the corresponding fault code 9268.
As of tester module level 4.0, the following items can be checked or read out with System Tester 9288:

Input signals with "Input signals" menu	**Actual values with "Actual values" menu**	**Actuators (Drive links) with "Drive links" menu**
Kickdown	Rpm	Solenoid valve 1
Downshift	Speed 1	Solenoid valve 2
Upshift	Speed 2	Solenoid valve 3
Manual program	Injection time	Solenoid valve 4
Selector lever	Throttle	Gear indicator 1 - 4
	Temperature	Ignition timing switch
	Transverse acceleration	
	Selector lever switch	
	Gear	
	Voltage supply	
	Version coding	

Printed in Germany, IX - 1993

General

Auxiliary tools

Use of the following auxiliary tools is recommended when checking the Tiptronic:

- Diagnosis Tester 9288 with connection cable
- Voltage and resistance meter (internal resistance > 10 MΩ)
- Oscilloscope
- Jump lead with matching spade connectors

General information

- Do not run resistance measurements on live wiring
- If poor terminal connections are found,
  - check wiring for damage
  - check connector terminals for tight fit, tight wire connections, deformation and corrosion
  - Before replacing the transmission or the Tiptronic control unit, always check wiring harness and system components with the System Tester. Otherwise new control unit or transmission may be destroyed again.

  Abbreviations:

  TE = Transmission electronics = – System components

  HCU = Hydraulic transmission control unit

Signals that can be checked with the oscilloscope

- Speed signal (from ABS)
- Speed signal (from transmission)
- Rpm signal (n-Mot) (from DME)
- ti signal (load of DME)

Definitions

System voltage

The system voltage reflects the current charging state of the battery. When the battery is discharged, the voltage is approx. 11 V, when the engine is running it is approx. 14.5 V.

Printed in Germany, IX – 1993

Unit functions
Installed units must operate correctly within a voltage range of 9.5 to 16.8 Volts.

Faults that cannot be detected by self-diagnosis

The Tiptronic control unit cannot detect and store all potential faults.

If a fault is found and if no fault has been stored, the tester may be used to run a system check to indicate any faults that may be present.

Some of these faults are stated below.

- No diagnosis possible, test point 0
  No diagnosis is possible if the diagnostic leads are faulty
- Terminal 30, Test point 1
  If terminal 30 is inoperative, all faults that may have been stored are erased after the ignition is switched off.
- Terminal 15, Test point 2
  If terminal 15 is inoperative, the system enters the (mechanical-hydraulic) emergency mode. The fault lamp does not come on.
- DME rpm signal is missing. Test point 5: Actual values, connector to DME
- Transmission oil level o.k.?
- Start interlock feature
  It must only be possible to start the engine in the P and N selector lever positions. Check selector lever switch to ignition switch cable.
- Several faults
  If several faults occur, this may be due to a missing ground lead (e.g. the common ground lead of the sensors at Tiptronic control unit pin 44), ground of body engine/transmission.
- Gear shift function
  In the event of faults in the gear shift function, check position switch (Test point 12).
  If the gear indicator shows the gear selected but the transmission does not shift to this gear, there may be a mechanical or hydraulic problem.
- Emergency operation, engine stalls. Fault memory: empty, "Rpm signal DME" and/or "Change of ignition timing" and/or "Throttle plate signal", check Motronic voltage supply.
- Brake light switch
  If engine speed drops too much after stop-and-go driving and braking (e.g. at traffic lights), the signal form the brake light switch to the Tiptronic control unit or the DME control unit may be missing.

Printed in Germany, IX – 1993

Connector layout

Cable outlet DME

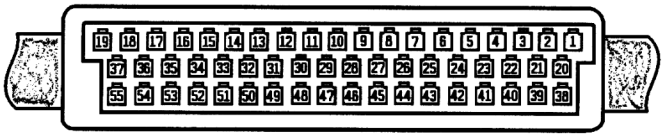

Cable outlet Tiptronic

Figs. 1 and 2 Tiptronic or DME control unit

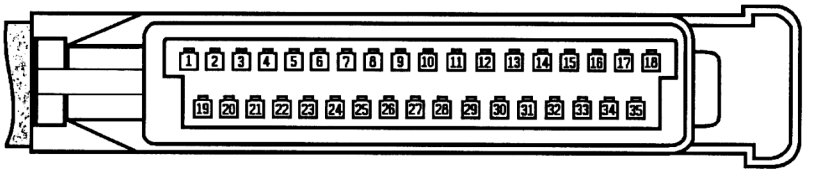

Fig. 3 ABS control unit

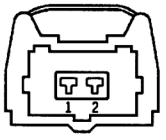

Fig. 4 Rpm sensor

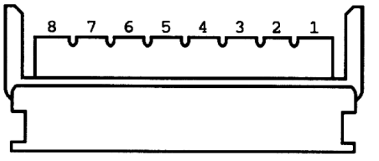

Fig. 7 Selector lever connector

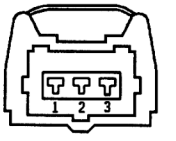

Fig. 9 Transverse acceleration sensor Throttle potentiometer

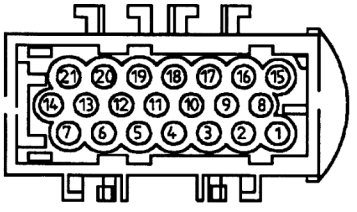

Fig. 5 T 47

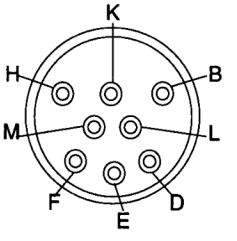

Fig. 8 Transmission connector T48

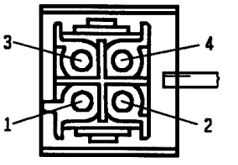

Fig. 10 Kickdown switch

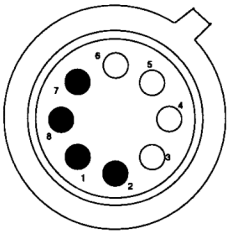

Fig. 6 Position switch

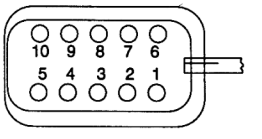

Fig. 11 T 46

Connector layout for diagnosis

Printed in Germany, IX – 1993

Fault, fault code	Possible causes, elimination, remarks

Test point 0

K and L wire

The diagnostic connection between the Tiptronic control unit and the tester is made across the K and L wires.

No diagnosis possible

If it is not possible to start the diagnosis with the System Tester 9288, the following checks should be made:

1) Check adapter lead 9288/1 for continuity
– Check K and L wire at adapter lead 9288/1 for continuity.
Socket 3 (8-pin connector) to pin 7 (19-pin connector)
Socket 7 (8-pin connector) to pin 8 (19-pin connector)

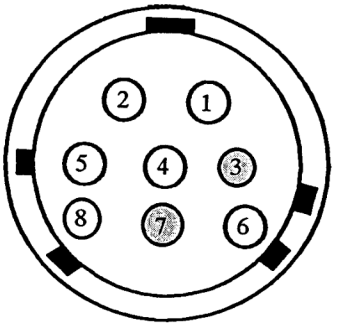

Bushing 3 = L wire

Bushing 7 = K wire

Connector at the Tester

2) Check voltage supply
– Check ground and terminal 15 at adapter lead 9288/1 for voltage supply.

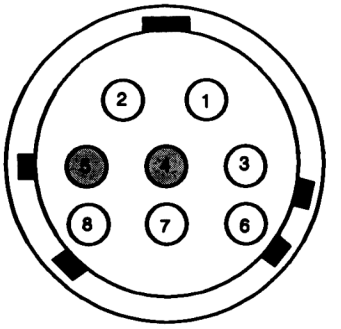

Bushing 4 = Ground

Bushing 5 = Terminal 15

Connector at the Tester

Printed in Germany, XI – 1994

Fault, fault code **Possible causes, elimination, remarks**

3) Check K and L wire with oscilloscope and special tool 9540.

- Check L wire:

  Disconnect connector 2 (yellow) from alarm control unit. Connect special tool 9540 between alarm control unit and connector 2. Connect oscilloscope to terminal 14 (L wire) of special tool 9540. Check L wire. To do so, turn on ignition and switch on System Tester 9288. Start diagnosis (by provoking fault).
- Check K wire:

  Same procedure as for L wire, but with terminal 15 for K wire instead of termial 14 for L wire.

For the L wire, the following signal must be displayed:

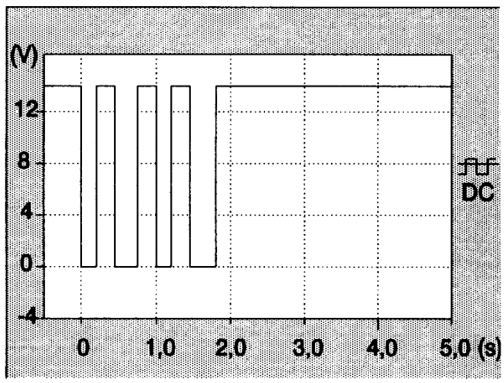

For the K wire, the following signal must be displayed:

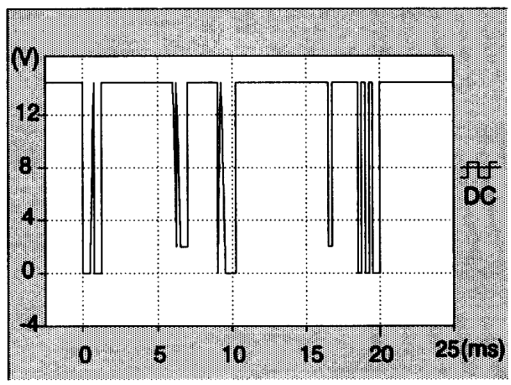

Fault, fault code	Possible causes, elimination, remarks

Note:

Differences between the signals indicated and those specified may be due to interference from a control unit connected to the K and L wires (see wiring diagram for systems capable of diagnosis). Disconnect connectors from the control units in turn and repeat checks of K and L wires. Start with the alarm control unit as described below. When the last control unit has been disconnected, at least one of the units disconnected must be connected up again. Otherwise, there will be no signal.

4) Disconnect alarm control unit and place jumper in position

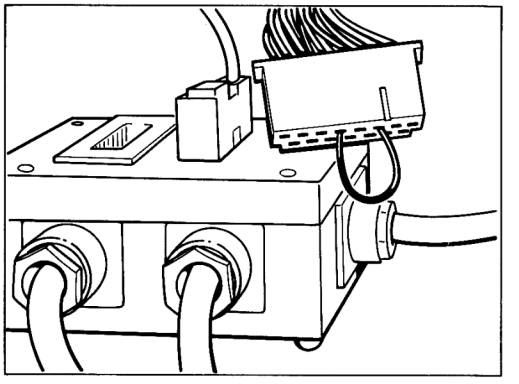

1216-03

Disconnect connector 1 (black) from alarm control unit. Place jumper on pins 4 and 6 of connector 1 of alarm control unit.

Check K wire and L wire again as described above.

5) Disconnect next control unit.

Turn ignition on, switch Tester off and on and start diagnosis (by provoking faults). Check signals on K and L wires. Repeat this procedure until all the control units have been disconnected.

6) Check K and L wires for shorts to ground.

7) Check each control unit for continuity to diagnosis socket.

Printed in Germany, IX – 1993

Fault, fault code	Possible causes, elimination, remarks
Test point 1 **Permanent positive (system voltage)**	**No display.** Detectable faults: Open circuit, short to ground, loose connection **Note:** – **No fault storage** (faults are lost when ignition is switched off) – Check voltage supply connections, positive to pin 39, negative to pins 7 and 26. – Check positive cable for continuity in accordance with wiring diagram and ensure that there are no shorts to ground. Fig. 1
Test point 2 **Voltage → control unit** Fault code 11 signal unplausible	**Emergency mode, no display.** Detectable faults: Voltage outside of valid range Voltage outside of valid range – Low voltage? U < 8 V Check battery, generator, regulator! – O.k.? Check for contact resistance at junctions, deformations and corrosion of contacts – Excessive voltage? Check power supply of vehicle (generator, regulator) U > 15 V with engine running Fig. 1
	Note If terminal 15 is missing, the Tiptronic control unit is not recognised by the Tester. If the Tiptronic diagnosis is not possible, check voltage supply to Tiptronic control unit connector pin 1 according to wiring diagram.

Printed in Germany, IX – 1993

Fault, fault code	Possible causes, elimination, remarks
Test point 3 **Voltage → drive links** Fault code 13	**Tiptronic warning lamp comes on, transmission is in emergency mode.** Detectable faults: Open circuit, short to positive Pull off transmission connector. Measure voltage at pin M. (System voltage) 1) No voltage: Pull off Tiptronic control unit connector. Check wiring from Tiptronic control unit pin 19 to transmission connector pin M. Wiring o.k.: Tiptronic control unit faulty 2) Voltage cannot be switched off: warning lamp does not come on when fault occurs Pull off Tiptronic control unit connector No voltage at pin M: Tiptronic control unit faulty Voltage at pin M: Short to positive within wiring (transmission → Tiptronic control unit) Figs. 1, 8
Test point 4 **Voltage → sensor** Fault code 14	**Upshifting in curves is not prevented.** Detectable faults: Open circuit/short to ground, short to positive Voltage supply 5 V ± 0,5 V 1) Check voltage at transverse acceleration sensor pin 3 with the ignition switched on. 2) Pull connector off Tiptonic control unit. Igniton "Off". Check wiring from Tiptronic control unit connector pin 45 to pin 27 and to transverse acceleration sensor pin 3 for continuity, short to ground and short to positive. Figs. 1, 9

Printed in Germany, IX – 1993

Fault, fault code	Possible causes, elimination, remarks
Test point 5 **Rpm signal ← DME** Fault code 21	**Tiptronic warning lamp comes on, transmission is in emergency mode.** Detectable faults: Open circuit/short to ground, short to positive, loose connection 1) Signal check Check signal with Tester 9288. (Engine operation) Check signal with oscilloscope at Tiptronic control unit connector pin. If signal is o.k.: Tiptronic control unit faulty Signal shape 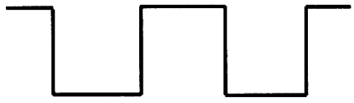 2) Open circuit, short to ground, short to positive Check wiring connections from DME control unit pin 6 to Tiptronic control unit pin 3, diagnosis socket pin 14 and combi-instrument connector B pin 3. Wiring connections o.k.: DME control unit faulty **Note:** If pin 3 of the DME control unit is shorted to ground, the DME relay cannot drop out and the fuel pump will run on even when the engine is switched off. This is also the case if a short to ground is found in the wirings to the Tipronic control unit. Fig. 1

Printed in Germany, IX – 1993

Fault, fault code	Possible causes, elimination, remarks
Test point 6 **Load signal ← DME** Fault code 22	**Tiptronic warning lamp comes on, transmission is in emergency mode.** Detectable faults: Open circuit/short to ground, short to positive, loose connection 1) Signal check – Check signal with Tester 9288 (injection time) with the engine running – Check signal with oscilloscope at Tiptronic control unit connector pin 21. If signal is o.k.: Tiptronic control unit faulty Signal shape of ti-signal 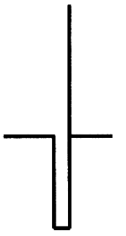 2) Open circuit, short to ground, short to positive Check wiring. Tiptronic control unit connector pin 21 to DME connector pin 17 (ground at Tiptronic control unit connector pin 7, positive at Tiptronic control unit connector pin 1) Fig. 1

Printed in Germany, IX – 1993

Fault, fault code	Possible causes, elimination, remarks
Test point 7 **Change of ignition timing** Fault code 24	**Tiptronic warning lamp comes on, transmission is in emergency mode.** Detectable faults: Open circuit/short to ground, short to positive 1) Check operation with Tester 9288 (drive link test). – Idle speed drops during test. If not: – Check coding plug at DME. 2) Check voltage drop – Remove cover from plugged-in connector T46. – Switch on ignition – Measure voltage at pin 6. Nominal value approx. 5 volts – Trigger signal with Tester. Voltage must drop. – Display o.k.: Check wiring to DME control unit (T 46 pin 6 to DME control unit pin 51). – Wiring o.k.: DME control unit faulty – Display not o.k.: Check wiring to Tiptronic control unit (T 46 pin 6 to Tiptronic control unit pin 32). – Wiring o.k.: Tiptronic control unit faulty Figs. 1, 2 Note: Check engine-to-body ground strap!

Printed in Germany, IX – 1993

Fault, fault code	Possible causes, elimination, remarks

Test point 8

Throttle plate signal
← DME CU
Fault code 25



In the case of a failure, a replacement value is formed.

Detectable faults: Open circuit/short to ground, short to positive

If the fault "Throttle plate potentiometer" is also stored in the DME, the fault must be remedied in accordance with the DME testing plan (item 3).

Checking the Tiptronic transmission:

Check percentage reading (actual values) with Tester 9288

If there is no display:

1) Measure voltage signal at Tiptronic control unit connector pin 11 using a voltmeter. The signal should range from 1 V at idle to about 10 V at full throttle (with the ignition on).

   If no voltage is measured:

2) Check wiring from Tiptronic control unit connector pin 11 to DME pin 52 for continuity and shorts to ground.

   If continuity o.k. → DME faulty
   If voltage o.k. → Tiptronic control unit faulty

Printed in Germany, IX – 1993

Fault, fault code	Possible causes, elimination, remarks
Test point 9 **Solenoid valve 1** Fault code 31	**Tiptronic warning lamp comes on, transmission is in emergency mode.** Detectable faults: Open circuit/short to ground, short to positive 1) Check operation with Tester 9288 (drive link test) – Acoustical test Triggering cycle of valves is audible as a clicking noise near the transmission. 2) Pull connector off Tiptronic control unit. a) Measure resistance between pin 5 and pin 19. Nominal value 34 Ohms, tolerance 10 % b) Check that pins 5 and 19 are free from shorts to ground. – Check o.k.: Tiptronic control unit faulty 3) Also pull off connector at transmission. – Check wiring (Tiptronic control unit connector pin 5 to transmission connector pin H and Tiptronic control unit connector pin 19 to transmission connector pin M). – Wiring o.k.: Solenoid valve faulty. Figs. 1, 8

Printed in Germany, IX – 1993

Fault, fault code	Possible causes, elimination, remarks
Test point 10 **Solenoid valve 2** Fault code 32	**Tiptronic warning lamp comes on, transmission is in emergency mode.** Detectable faults: Open circuit/short to ground, short to positive 1) Check operation with Tester 9288 (drive link test) – Acoustical test Triggering cycle of vlaves is audible as a clicking noise near the transmission. 2) Pull connector off Tiptronic control unit a) Measure resistance between pin 24 and pin 19. Nominal value 34 Ohms, tolerance 10 % b) Check that pins 24 and 19 are free from shorts to ground. – Check o.k.: Tiptronic control unit faulty 3) Also pull off connector at transmission. – Check wiring (Tiptronic control unit connector pin 24 to transmission connector pin K and Tiptronic control unit connector pin 19 to transmission connector pin M). – Wiring o.k.: Solenoid valve faulty. Fig. 1, 8
Test point 11 **Pressure regulator** Fault code 34	**Tiptronic warning lamp comes on, transmission is in emergency mode.** Detectable faults: Open circuit/short to ground, short to positive 1) Pull connector off Tiptronic control unit a) Measure resistance between pin 42 and pin 19. Nominal value 6 Ohms ± 2 Ohms b) Check that pins 6 and 19 are free from shorts to ground. – Check o.k.: Tiptronic control unit faulty 2) Also pull off connector at transmission. – Check wiring (Tiptronic control unit connector pin 6 to transmission connector pin B and Tiptronic control unit connector pin 19 to transmission connector pin M). – Wiring o.k.: Pressure regulator faulty. Figs. 1, 8

Printed in Germany, IX – 1993

Fault, fault code	Possible causes, elimination, remarks

Test point 12

Selector lever switch/ transmission
Fault code 35

Tiptronic warning lamp comes on, transmission is in emergency mode.
Detectable faults: Open circuit, short to ground, short to positive

1) Check operation with Tester 9288

Adjustment of Tester 9288:
Menu: "Input signals" = Selector lever/manual program

Shift through selector lever positions P, R, N, D, 3, 2, 1 one after another.

Compare: Selector lever position
Position indicator in speedometer
Position indicator on Tester 9288

Caution:

Due to its design, the display on Tester 9288 appears with a certain delay - shift through positions sufficiently slowly.

No match: Check wiring according to wiring diagram, check position switch with/without wiring

2) Disconnect Tiptronic control unit connector, with the ignition turned off.

Fig. 1

- Check Tiptronic control unit connector pin 26 for ground, using an ohmmeter.
- If no ground is present, refer to wiring diagram distributing point 1 and GP IX.

Printed in Germany, IX – 1993

Fault, fault code | **Possible causes, elimination, remarks**

3) Measure position switch according to table 1

Ohmmeter display
– = no continuity
0 = continuity

Table 1

	Pin 14*	Pin 33*	Pin 50*	T 46 Pin 2*	T 47 Pin 14-15
P	–	–	0	0	–
R	0	–	0	–	0
N	0	–	–	0	–
D	0	0	–	–	–
3	0	0	0	–	–
2	–	0	0	–	–
1	–	0	–	–	–

*to ground

- Measurements o.k. Control unit faulty
- Measurements present but wrong sequence?
- Check connection cable from selector lever switch to position switch
- Connection cable adjusted correctly?
- Repair instruction: "Adjust position switch"
- Open circuit, short to ground, short to positive?

4) Check position switch without connections
- Disconnect connector from position switch
- Check switch for continuity, table 2

Fig. 7

Ohmmeter display
– = no continuity
0 = continuity

Table 2

Pin	4-1	4-2	4-3	6-5	8-7
P	–	–	0	0	–
R	0	–	0	–	0
N	0	–	–	0	–
D	0	0	–	–	–
3	0	0	0	–	–
2	–	0	0	–	–
1	–	0	–	–	–

- Fault? Replace position switch
- No fault: Check wirings from position switch to T 46, T 47

Printed in Germany, IX – 1993

Fault, fault code	Possible causes, elimination, remarks
Test point 13 **Speed sensor** (transmission) The sensor transmits the transmission speed. The Tiptronic control unit compares it to the wheel speed. Fault code 36	**Tiptronic warning lamp comes on, transmission is in emergency mode.** Detectable faults: Open circuit/Short to ground/short to positive, loose connection **Note:** Check with Tester 9288 (actual values). Store faults as of engine speed = 2800 rpm 1) Pull connector off Tiptronic control unit. a) Measure resistance between pin 2 and pin 38. Nominal value approx. 1.1 kΩ b) Check that pin 2 and pin 38 are free from shorts to ground. 2) Also pull off connector from speed sensor, transmission. Check for continuity at Tiptronic control unit connector pin 2 to speed sensor connector pin 1 Check for continuity at Tiptronic control unit connector pin 38 to speed sensor connector pin 2 Short to ground pin 2 and pin 38 to pin 7 (ground) Pin 2 and pin 38 to pin 20 (screening) Short to positive pin 2 and pin 38 to pin 1 (positive) **Note:** If it is to be assumed that intermittent faults linked to the output speed occur, the screening connection at pin 20 should be checked after opening the connector housing. Possible transmission faults: Oil strainer clogged, air intake if oil starvation occurs etc., power transmission interrupted. Oil level low. Figs. 1, 4

Printed in Germany, IX – 1993

Fault, fault code	Possible causes, elimination, remarks
Test point 14 **Transmission temperature sensor** Fault code 37	**If a fault occurs, a replacement value = 60° C is assumed.** Detectable faults: Open circuit/short to positive, short to ground, corrupted signal **Note:** Existing faults are stored only when the engine is running. 1) Check temperatur with Tester 9288 (actual values) 2) Pull connector off Tiptronic control unit Measure resistance between pin 46 and pin 44 Nominal value approx. 1.00 kΩ/20° C 1.15 kΩ/40° C 1.30 kΩ/60° C Check wiring. Figs. 1, 8

Printed in Germany, IX – 1993

Fault, fault code	Possible causes, elimination, remarks
Test point 15 **Selector lever switch/ transmission** only for starting Fault code 38	**Tiptronic warning lamp comes on, transmission is in emergency mode.** Specification: Engine may be started in P or N positions only Actual status: Engine may also be started in selector lever positions other than P and N Detectable faults: Open circuit, short to ground, short to positive Start possible, except P and N 1) Check adjustment of bowden cable to position switch. – If required, run electrical test as described under Test point 12, item 4 – No start possible? 2) Pull off start relay G 20 in Central Electrical System – Ground must only be present at relay base terminal 85 when the selector lever is set to P or N. – Check wiring to position switch for short to ground. 3) Check position switch as described under Test point 12, item 4 Figs. 2, 6

Printed in Germany, IX – 1993

Fault, fault code	Possible causes, elimination, remarks
Test point 16 **Solenoid valve 3** Fault code 39	**Tiptronic warning lamp comes on, transmission is in emergency mode.** Detectable faults: Open circuit/short to gound, short to positive 1) Check operation with Tester 9288 (drive link test) – Acoustical test Triggering cycle of valves is audible as a clicking noise near the transmission. 2) Pull connector off Tiptronic control unit. a) Measure resistance between pin 42 and pin 19. Nominal value 34 Ohms, tolerance 10 % b) Check that pins 42 and 19 are free from shorts to ground. 3) Also pull off connector at transmission. – Check wiring (Tiptronic control unit connector pin 42 to transmission connector pin L and Tiptronic control unit connector pin 19 to transmission connector pin M). – Wiring o.k.: Solenoid valve faulty Figs. 1, 8
Test point 17 **Solenoid valve 4** Fault code 40	**Tiptronic warning lamp comes on, transmission is in emergency mode.** Detectable faults: Open circuit/short to gound, short to positive 1) Check operation with Tester 9288 (drive link test) – Acoustical test Triggering cycle of valves is audible as a clicking noise near the transmission. 2) Pull connector off Tiptronic control unit. a) Measure resistance between pin 16 and pin 19. Nominal value 34 Ohms, tolerance 10 % b) Check that pins 16 and 19 are free from shorts to ground. 3) Also pull off connector at transmission. – Check wiring (Tiptronic control unit connector pin 16 to transmission connector pin D and Tiptronic control unit connector pin 19 to transmission connector pin M). – Wiring o.k.: Solenoid valve faulty Figs. 1, 8

Printed in Germany, IX – 1993

Fault, fault code	Possible causes, elimination, remarks
Test point 18 **Control unit faulty** Fault code 42	**Tiptronic warning lamp comes on, transmission is in emergency mode.** Replace control unit
Test point 19 **Control unit faulty** Fault code 43	**Tiptronic warning lamp comes on, transmission is in emergency mode.** Replace control unit
Test point 20 **Control unit faulty** Fault code 44	**Tiptronic warning lamp comes on, transmission is in emergency mode.** Replace control unit
Test point 21 **Downshift fault** Fault code 45	**Tiptronic warning lamp comes on, transmission is in emergency mode.** Possible faults: Corrupted rpm signal, from output or engine or output/engine rpm relationship Faulty transmission (clutch slips) 1) Check speed sensor, Test point 13 2) Check transmission
Test point 22 **Rev. limiter** Fault code 46	**Tiptronic warning lamp comes on, transmission is in emergency mode.** Possible faults: Corrupted rpm signal, from output or engine or output/engine rpm relationship Faulty transmission (clutch slips) 1) Check speed sensor, Test point 13 2) Check transmission

Printed in Germany, IX – 1993

Fault, fault code	Possible causes, elimination, remarks
Test point 23 **Gear sel. monitor** Fault code 48	**Tiptronic warning lamp comes on, transmission is in emergency mode.** Possible faults: Corrupted rpm signal, from output or engine or output/engine rpm relationship Solenoid valves faulty. Faulty transmission (clutch slips). 1) Check speed sensor, Test point 13. 2) Check solenoid valves, Test points 9, 10, 16 and 17. 3) Check transmission.
Test point 24 **Manual program switch** Fault code 51	**No manual program possible.** Detectable faults: Short to ground 1) Check operation with Tester 9288 (Input signals) 2) Pull connector off Tiptronic control unit. Check connection from Tiptronic control unit connector pin 48 to selector lever switch pin 3 for short to ground Figs. 1, 7
Test point 25 **Tip-switch up/down shifting** Fault code 52	**No manual program possible.** Detectable faults: Short to ground 1) Check operation with Tester 9288 (Input signals) 2) Pull connector off Tiptronic control unit. Check connection from Tiptronic control unit connector pin 10 to selector lever switch pin 2 (upshift) or connection from Tiptronic control unit connector pin 29 to selector lever switch pin 1 (downshift) for short to ground. Figs. 1, 7

Printed in Germany, IX – 1993

Fault, fault code	Possible causes, elimination, remarks
Test point 26 **Kickdown switch** Fault code 53	**No kickdown shift.** Detectable faults: Short to ground 1a) Acoustical check of switch b) Check operation with Tester 9288 (Input signal - Test) 2) Remove and check kickdown switch (Note: Adjust switch after replacment) 3) Pull connector off Tiptronic control unit. Check connection from Tiptronic control unit connector pin 30 to kickdown switch pin 2 for short to ground. Fig. 1
Test point 27 **Transverse acceleration sensor** Fault code 54	**Upshifting in curves is not prevented.** Detectable faults: Open circuit/short to ground, short to positive 1) Check sensor with Tester 9288 (actual values) (Nominal value around 0 g with vehicle on level surface. Sensor can be checked by raising the vehicle on one side). 2) Remove connector from sensor. Check sensor supply (5 V) to pin 3 and ground at pin 1 with the ignition switched on. 3) Check wiring according to wiring diagram Check continuity from pin 45/Tiptronic control unit connector to pin 3/sensor Pin 40 Tiptronic control unit to pin 2 sensor Pin 44 Tiptronic control unit to pin 1 sensor Check pins 2 and 3 sensor for short fo ground Check pins 1, 2 and 3 sensor for short to positive Figs. 1, 9

Printed in Germany, IX – 1993

Fault, fault code	Possible causes, elimination, remarks
Test point 28 **Speed signal 1** **←ABS CU** Fault code 55	**Upshifting is not prevented, no manual program** Detectable faults: Open circuit/short to ground/short to positive 1) Signal comes from ABS. ABS o.k.? 2) Check signal with Tester 9288, raising vehicle and rotating right-hand front wheel manually. 3) Check wiring according to wiring diagram. Check for continuity: Pin 12 Tiptronic control unit connector to ABS control unit connector pin 23 Check pin 12 for short to ground. Check pin 12 for short to positive. 4) Check signal with oscilloscope (Tiptronic control unit connector pin 12) (Ignition on) Speed signal Signal present: Tiptronic control unit faulty No signal: ABS faulty Figs. 1, 3 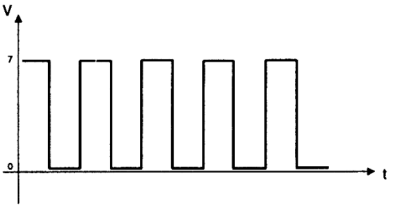
Test point 29 **Combi-instrument input** Fault code 56	**No display.** Detectable faults: Open circuit/short to ground, short to positive 1) Turn manual program on and off. Check display on instrument 2) Pull off Tiptronic control unit connector. Connect pin 13 to ground. Display o.k.: Tiptronic control unit faulty 3) Check wiring of Tiptronic control unit pin 13 to combi-instrument connector X4 pin 4. Wiring o.k. Speedometer faulty Fig. 1

Fault, fault code	Possible causes, elimination, remarks

Test point 30

Oil cooler blower relay
Fault code 57

Detectable faults: Short to positive

Note

Monitoring of control lead to cooler blower relay (G10 Central Electrical System).

1) Check Tiptronic control unit connector/pin 49 to relay base/termial TF for short to positive. (Observe connection to A/C control unit).
2) Check connection form relay base/terminal TF to cooling-water temperature switch for short to positive.
3) On vehicles with air conditioning, check connection from relay base/terminal TF to pressure switch/air conditioning for short to positive.

Fig. 1

Test point 31

Unknown DTC
Fault code xx

Check ground points, especially GP battery-body and battery-engine.

Printed in Germany, IX – 1993

Troubleshooting the Tiptronic transmission (mechanical/hydraulic section)

Introduction

The below troubleshooting chart for the mechanical/hydraulic section of the Tiptronic is designed as a guideline for repair operations.

The faults have been arranged in the way they are usually indicated by the customers. Deviations of the descriptions are possible and should be completed accordingly by the service personnel.

If complaints about leaks are received it is recommended to determine the location of the leak as closely as possible before any sealing operations are started. Crack testing agents such as

Spot - Check or Met-L-Check

are suitable for this purpose. These products are marketed as spray cans and allow positive identification of the leak after a short test drive.

Troubleshooting procedure: Proceed in the sequence of the selector lever positions, starting with

1. Position P Page D 38 - 203
2. Position R Page D 38 - 203
3. Position N Page D 38 - 205
4. Position D Page D 38 - 205
5. Position 3 Page D 38 - 208
6. Position 2 Page D 38 - 208
7. Position 1 Page D 38 - 208
8. General Page D 38 - 208
9. Leaks Page D 38 - 210
10. Noises Page D 38 - 211

Printed in Germany, IX - 1993

Clutches, brakes, freewheels and solenoid valves applied in the individual gears

	1st gear	2nd gear	3rd gear	4th gear	Rev. gear
Clutch A	X	X	X		
Clutch B					X
Brake C		X	(X)	(X)	
Brake band C'		X		X	
Brake D	⊗				X
Clutch E			X	X	
Freewheel 1st gear	X				
Freewheel 2nd gear		X			
Solenoid valve 1		X	X		
Solenoid valve 2	X	X			
Solenoid valve 3					
Solenoid valve 4	⊗				

Solenoid valve 3 is activated for a short time only, during 4 - 3 shift operation.

⊗ Only in selector lever position 1, 1st gear (engine braking effect in overrun).

(X) Elements in waiting queue

This overview allows the components affected to be located if mechanical damage has occurred.

Printed in Germany, IX - 1993

Troubleshooting mechanical/hydraulic section

(Causes indicated in italics are located in the HCU)

Fault	Possible cause	Remedy
1. P Position		
1.1 Parking position does not engage	• Cable for selector lever adjusted incorrrectly	• Correct adjustment
	• Excessive friction in parking lock mechanism	• Replace parking lock components (linkage rod, pawl) or make them operative again
1.2 Parking position does not remain engaged (jumps out of gear)	• Cable for selector lever adjusted incorrrectly	• Correct adjustment
1.3 Engine cannot be started	• Multifunction-switch adjusted incorrectly	• Correct adjustment
	• Multifunction-switch faulty	• Replace multifunction-switch • Refer to diagnosis item 15
2. R Position		
2.1 No reverse gear	• Cable for selector lever adjusted incorrrectly	• Correct adjustment
	• *Oil strainer clogged*	• Refer to item 10.2
	• Clutch B destroyed	• Replace transmission
	• Brake D destroyed. No engine braking effect is therefore available in pos. 1, 1st gear	• Replace transmission

Printed in Germany, IX – 1993

Fault	Possible cause	Remedy
2.2 Slipping or judder when moving off	• Clutch B or brake D damaged • Oil feed of clutch B leaky (rectangular rings on intermediate plate)	• Replace transmission • Replace transmission
2.3 Hard, bumpy engagement of P-R or N-R or clearly noticeable double shock during P-R or N-R shifts	• Idle speed too high • *Damper D faulty; in this case 2-1 shift operations will also be impaired* • *Modulating pressure too high*	• Adjust engine • *Replace HCU* • *Check TE* • Refer to diagnosis item 11 • *Replace HCU*
2.4 Reverse light does not light (electrical system o.k.)	• Multifunction-switch adjusted incorrectly • Multifunction-switch faulty	• Correct adjustment • Replace multifunction-switch • Refer to diagnosis item 12
2.5 No reverse and no forward gear	• *Main pressure valve stuck* • *Main pressure valve spring broken*	• *Replace HCU*

Printed in Germany, IX – 1993

Fault	Possible cause	Remedy
3. N Position		
3.1 Engine cannot be started	• Multifunction-switch adjusted incorrectly	• Correct adjustment
	• Multifunction-switch faulty	• Replace multifunction-switch • Refer to diagnosis item 15
3.2 Vehicle moves off or creeps	• Cable for selector lever adjusted incorrectly	• Correct adjustment
	• Clutch A faulty (welded up)	• Replace transmission
4. D Position		
4.1 No power flow	• Cable for selector lever adjusted incorrectly	• Correct adjustment
	• Oil strainer clogged	• Refer to item 10.2
	• *Main pressure valve stuck*	• *Replace HCU*
	• *Main pressure valve spring stuck*	• *Replace HCU*
	• Clutch A faulty	• Replace transmission
	• 1st gear freewheel slipping	• Replace transmission
	• *Shift valve 3 - 4 stuck*	• *Replace HCU*
4.2 Slipping or judder when moving off	• Clutch A damaged	• Replace transmission
	• Rectangular ring or O-ring on turbine shaft damaged (sealing, oil feed clutch A)	• Replace transmission

Printed in Germany, IX – 1993

Fault	Possible cause	Remedy
4.3 Hard, bumpy engagement of N-D	• Idle speed too high • *Dampfer A faulty* • Clutch A damaged	• Adjust engine • *Replace HCU* • Replace transmission
4.4 No shift 1-2/2-1	• *Shift valve 1-2 stuck* • *Pressure reducer valve 1 stuck* • Brakes C' and C damaged	• *Replace HCU* • Replace transmission
4.5 No shift 2-3/3-2	• *Shift valve 2-3 stuck* • Clutch E damaged	• *Replace HCU* • Replace transmission
4.6 No shift 3-4/4-3	• *Shift valve 3-4 stuck* • Brake C' damaged; in this case, 1-2 shift operations will also be impaired	• *Replace HCU* • Replace transmission
4.7 Vehicle moves off in 3rd gear	• *Shift valve 1-2 and 2-3 stuck*	• *Replace HCU*
4.8 Upshift 1-3	• *Shift valve 2-3 stuck*	• *Replace HCU*
4.9 Upshift 1-4 and engine stalls	• *Internal leak in HCU*	• *Replace HCU*

Printed in Germany, IX – 1993

Fault	Possible cause	Remedy
4.10 Shift rpm		
Zero-load shift not o.k.	• Accelerator cable adjusted incorrectly • *Shift valves binding*	• Adjust accelerator cable, refer to diagnosis item 8 • Replace HCU
Full-load shift points not o.k.	• Accelerator cable adjusted incorrectly	• Adjust accelerator cable • Refer to diagnosis item 8
No kickdown shift	• Accelerator cable adjusted incorrectly • Kickdown shift faulty	• Adjust accelerator cable • Check switch, replace if required
4.11 Shift progressions		
Zero-load shifts excessively hard	• *Modulating pressure too high* • *Damper faulty* • Friction discs damaged	• *Replace HCU* • *Replace HCU* • Replace transmission
4.12 Shifts 1-2/2-3/3-4 too lengthy	• *Damper faulty* • *Modulating valve binding* • *Pressure reducer valves 1 and 2 binding*	• *Replace HCU*
Full-load and kickdown shifts too lengthy	• *Modulating pressure too low* • *Damper faulty* • Friction discs damaged	• *Replace HCU* • *Replace HCU* • *Replace HCU*
4.13 Upshifts 1-2/2-3/3-4 too hard	• *Modulating valve binding*	• *Replace HCU*
Full-load and kickdown shifts too hard	• *Modulating pressure not o.k.* • *Damper faulty*	• *Replace HCU* • *Replace HCU*

Printed in Germany, IX – 1993

Fault	Possible cause	Remedy
5. Position 3		
5.1 Manual downshift 4-3 not o.k.	• *Shift valve 3-4 stuck* • *Damper A faulty*	• *Replace HCU*
6. Position 2		
6.1 Manual downshift 3-2 not o.k.	• *Shift valve 3-2 stuck* • *Damper C' faulty*	• *Replace HCU*
6.2 No engine braking effect	• Brake C' damaged	• *Replace transmission*
7. Position 1		
7.1 Manual downshift 2-1 not o.k.	• *Shift valve 1-2 stuck* • *Damper D faulty* • *Modulating valve binding*	• *Replace HCU*
7.2 No engine braking effect	• Brake D damaged	• Replace transmission
8. General		
8.1 Noises are audible after longer driving periods and power flow is interrupted subsequently	• Oil strainer of HCU clogged	• If no burnt clutch lining is present in the oil pan, only the oil strainer requires replacing. In all other cases replace transmission.
8.2 No forward or rear power flow, heavy noises	• Driver plate between torque converter and engine torn off • Pump driver torn	• Replace driver plate or torque converter, respectively • Replace transmission

Printed in Germany, IX – 1993

Troubleshooting mechanical/hydraulic section

Printed in Germany, IX – 1993

Fault	Possible cause	Remedy
9. Leaks		
9.1 ATF drips from torque converter bell housing	• Seals in pump housing damaged	• Replace oil seals
	• Pump housing leaky	• Replace pump assembly
	• Torque converter leaks at weld joint	• Replace torque converter
	• Seals under fastening screws of pump damaged	• Replace oil seals
9.2 Transmission oil drips from torque converter bell housing	• Seals for differential leaky	• Replace oil seals (possible with transmission installed)
9.3 Leak at cap of brake C'	• O-rings damaged	• Replace O-rings
9.4 Oil drips from leak detection point (to the right of ATF pan)	• Transmission (ATF) leak • Differential leak (75W90 transmission oil)	• Replace oil seals
9.5 Oil loss at transmission connector	• O-ring damaged	• Replace O-ring
9.6 Oil loss across or at breather	• Oil level too high	• Correct oil level
	• Incorrect oil (excessive foaming)	• Change oil, remove transmission if required and drain complete with torque converter
	• Breather cover missing	• Refit cap or replace breather as required
	• O-ring at breather damaged	• Replace O-ring
	• Lock washer preload insufficient	• Replace lock washer
9.7 Oil loss at rear axle breather	• Oil level too high	• Correct oil level

Printed in Germany, IX – 1993

Fault	Possible cause	Remedy
10. Noises		
10.1 High-pitched noise in all shift positions, particularly while oil is cold. Oil pump intake noise	• Oil level too low • *HCU leaky* • Pump bushing has seized	• Correct oil level • *Replace HCU* • Replace pump
10.2 High-pitched, chirping noise varying with rpm in all shift positions, particularly when oil is hot, may appear after longer driving periods, sometimes in conjunction with interruption of power flow	• Oil strainer clogged	• Replace oil strainer if no friction lining residues are found in the oil sump. In all other cases, replace the complete transmission assembly.
10.3 Noises in reverse	• Pump bushing has seized	• Replace pump

Printed in Germany, IX – 1993

Removing and installing torque converter

Removing

1. Remove transmission
   (refer to page 37 - 201).

2. Remove converter, with transmission in horizontal position.

Note

Do not damage converter bearing assembly and rotary shaft seal.

Installing

1. Carefully insert converter, with transmission in horizontal position. Turn the converter to and fro until the gear toothing engages and the installation position is reached.

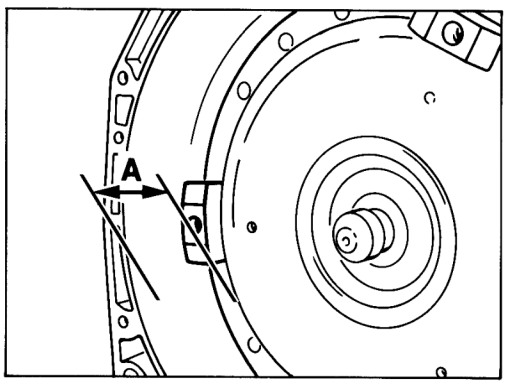

412-32

A = approx. 10 mm

2. Make sure the converter does not drop out.

Printed in Germany – VIII, 1993

Removing and installing the rotary shaft seal for the torque converter

Removing

1. Remove transmission and converter.

2. Lever out sealing ring with **VW 681.** Take care not to damage the housing sealing face.

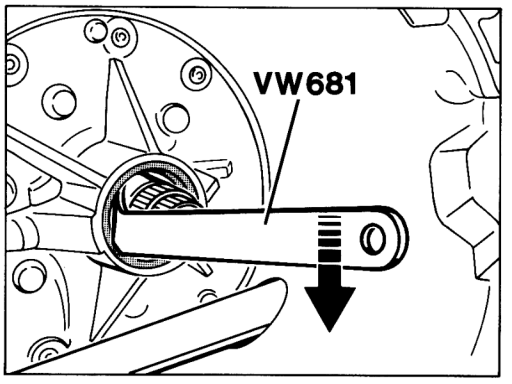

419-38

Installing

Installation takes place in reverse order.

1. Wet sealing lip with ATF.

2. Using Special Tool **9344**, press in seal until it is seated against the stop.

Printed in Germany – VIII, 1993

Removing and installing transmission - Model A 44

Removal

1. Remove rear muffler and heat shield.

2. Unbolt drive shafts on transmission side and suspend horizontally on vehicle.

3. Pull off rpm sensor (inductive sensor) and unclip wire from transmission housing. On USA vehicles, remove support at rear transmission cover.

4. Disconnect wiring connectors at transmission.

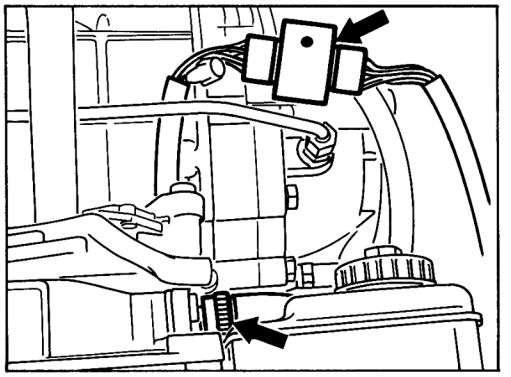

1144-37

5. Disconnect ATF lines from transmission housing, using a second open-ended wrench to lock. Plug oil bores to avoid ingress of dirt.

6. Disconnect selector lever cable from lever and bracket from transmission. The ball socket keeps the cable from jumping out of position.

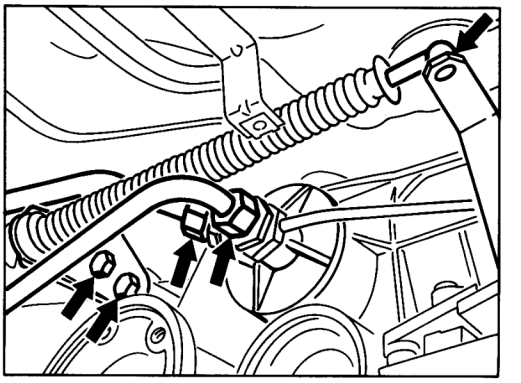

1145-37

7. Remove cover for service hole and undo torque converter fastening bolts. If required, lock pulley to keep assembly from turning.

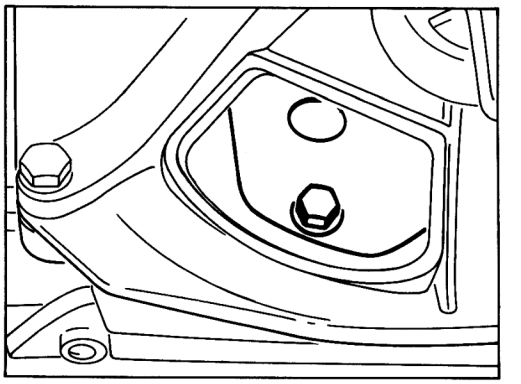

1146-37

8. Keep transmission complete with central tube in installation position, placing a suitable wooden block between crosslink and central tube. Make sure the oil lines have enough clearance.

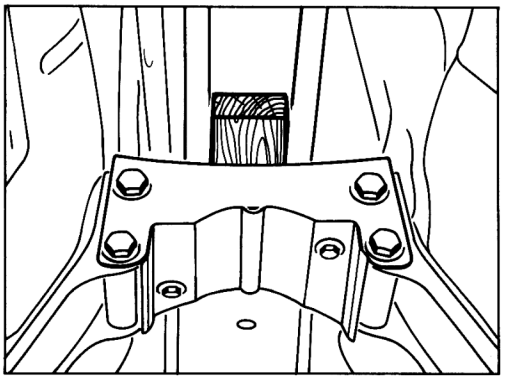

1147-37

9. Place transmission jack below transmission and secure with mounting strap.

10. Remove fastening bolts for transmission mounts.

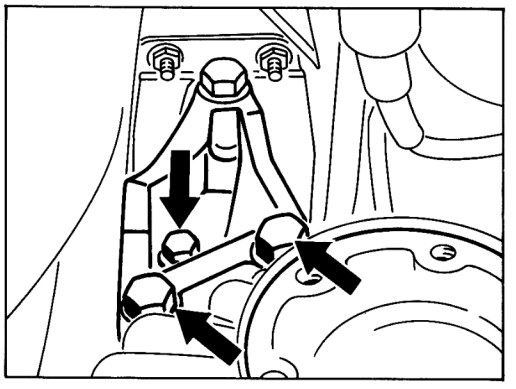

1148-37

11. Remove fastening bolts for transmis sion/central tube housing. Pull back transmission with torque converter and extract carefully towards bottom. Secure torque converter against dropping out.

Installation

1. Fit transmission using the transmission jack. Apply a light coat of multipurpose grease to the lug at the torque converter and guide in the driver plate.

2. Put transmission into place and fit flange bolts. Tighten all fastening bolts to the specified torque.

3. Retain transmission in installation position and fit transmission mount.

4. Tighten ATF lines to the transmission, fitting new seals.

5. Fit bracket to transmission and engage selector lever cable in D position.

6. Check adjustment. Select all gears and check if the respective gears are indicated on the tachometer. Also check gate change from „D" to „M". A straight movement must be possible without binding of the lever.

Printed in Germany – VII, 1992

7. Refit wiring connectors, drive shafts, driver plate and exhaust system.

Tightening torques:

Transmission to central tube	M 10	42 Nm (31 ftlb)
Driver plate to torque converter	M 10	76 Nm (56 ftlb)
Screw fitting of oil line to adapter		24 Nm (18 ftlb)
Bracket on transmission	M 8	23 Nm (17 ftlb)
Drive shafts	M 8	42 Nm (31 ftlb)

Printed in Germany – V, 1992

Keylock and Shiftlock Check Points / Adjustment operations

Keylock check (ignition key lock)

Selector lever position	Unlocking button status	Keylock operative	Ignition key
P	Not actuated	No	Can be turned and pulled off
P	Actuated	Yes	Cannot be turned to pull-off position
R-N-D-3-2-1	Not actuated / actuated	Yes	Cannot be turned to pull-off position

Keylock check (selector lever lock)

Ignition key position	Unlocking button status	Keylock operative	Selector lever
Removed or removal position	Locked	Yes	Locked
Position 1	Not locked	No	Not locked

Shiftlock check

Selector lever position	Ignition key position	Brake	Shiftlock operative (solenoid)	Selector lever
P-R-N-D-3-2-1	I (radio position)	Actuated / not actuated	No (deenergized)	Not locked
P and N	II (Ignition on)	Not actuated	Yes (energized)	Locked
P and N	II (Ignition on)	Actuated	No (deenergized)	Not locked

For notes on Shiftlock, refer to page 37 - 207

Printed in Germany – VII, 1992

Adjusting Keylock bowden cable

Note

If the ignition lock cannot be turned to the „0" position with the selector lever set to „P", the bowden cable position should be corrected as follows:

1. Set selector lever to "P" position.
   Set ignition lock to „II" position and turn to "0" again.

2. To adjust cable, turn the cable sleeve at the slide housing (No. 1) until the distance (A) between the notch at the locking slide (No. 2) and the mark edge of the gate (No. 3) is 6 mm.
   When turning the sleeve, lock at the square of the slide housing (No. 4) to keep it from turning.

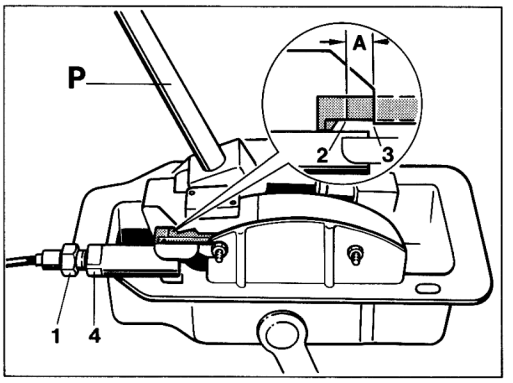

1281-37

A = 6 mm

3. Check operation of Keylock and Shiftlock.

Printed in Germany – VII, 1992

Lift solenoid for Shiftlock

Notes for Shiftlock

— When the vehicle is moving slowly (faster than at walking pace), the selector lever may be moved from the „N" position to a driving stage without having to actuate the service brake.

— The solenoid for energization of the P/N lock operates with a delay of approx. one second. This means that shifts from „R" via „N" to „D" and back again may be made without having to actuate the brakes. This is a significant advantage for maneuvring and for moving off when the car is stuck (e.g. in winter).

— **Electrical operation, emergency operation.**
Electrical operation and emergency operation are described on page 37 - 209.

Checking lift solenoid for Shiftlock

— Separating wiring lead (connector) from lift solenoid.

— Apply system voltage. Lift solenoid must pull in.
Caution
Be sure to observe correct polarity as the solenoid may otherwise be damaged.
Red = positive / black = ground.

— If the lift solenoid pulls in, the fault is due to the lift solenoid drive circuit (relay, stop light switch, electrical wiring etc.). Refer to wiring diagram for troubleshooting.

Replacement

— To replace or to adjust the Shiftlock solenoid, the selector lever support must be removed and dismantled.

For adjustment of the lift solenoid, refer to page 37 - 208

Printed in Germany – VII, 1992

Adjusting lift solenoid of Shiftlock

Adjust lift solenoid as follows:

— After fitting the lift solenoid, push it all the way down in the slots of the gate guide (No. 5). Tighten fastening screws (No. 3) only lightly.

— Fit the angular lever (No. 2) to the gate guide (No. 5) using the 8 mm stud (assembly tool / No. 1).

— Apply current to lift solenoid (apply system voltage, observe correct polarity) and slide along inside slots until the locking idler **lightly touches the surfaces a and b of the ratchet (No. 4).**

— Tighten fastening screws (No. 3) to 2.8 Nm (2 ftlb) in this position.
Check operation again.

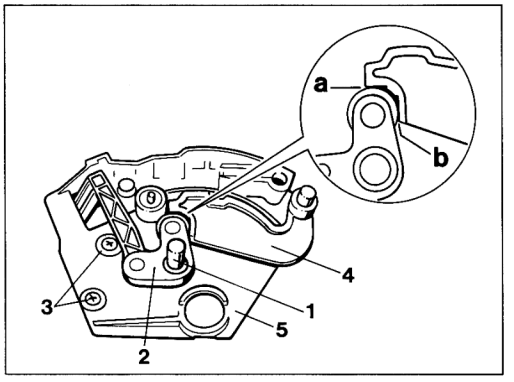

1282-37

Printed in Germany – VII, 1992

Shiftlock - Emergency operation

Operation

Locking of the selector lever in the „P" and „N" positions is achieved with a solenoid.
To energize the solenoid, a selector lever control unit located in the relay housing in slot G 23 of the auxiliary Central Electrical System is used.
The auxiliary Central Electrical System is located below the instrument panel to the left of the steering tube (on RHD vehicles, it is found to the left below the steering tube).

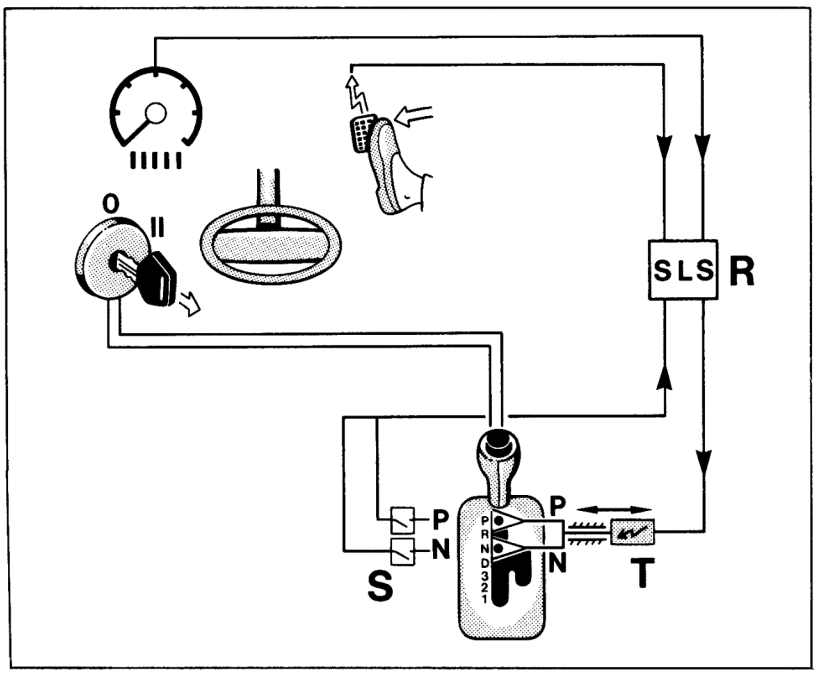

Block diagram - Shiftlock

R - Selector lever lock control unit
S - Microswitch for P/N detection
T - Solenoid

Emergency operation

In case of faulty brake light switch, open circuit (not in any case) or short circuit of the solenoid, the selector lever cannot be moved out of the „P" and „N" positions anymore.

For **emergency operation,** the selector lever lock control unit (located in a relay housing) may be pulled off (slot G 23 of auxiliary Central Electrical System).

This feature may only be bypassed in case of emergency!

Printed in Germany – VII, 1992

Removing and installing multi-function switch to transmission

Removal

1. Set selector lever to „N".

2. Remove rear muffler and shroud.

3. Unhook selector lever cable from operating lever.

Note

A clamp is provided to protect the ball socket from disengaging.

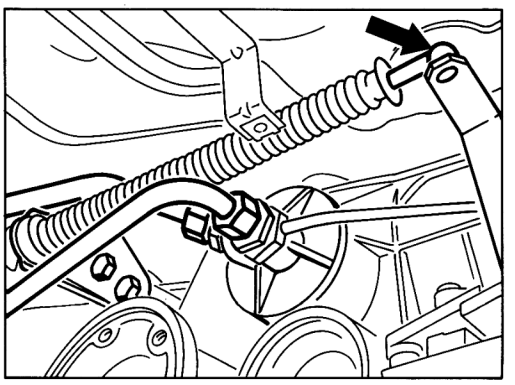

1145-37

4. Unlatch wire retainer, take out connector and disconnect.

5. Unscrew hexagon head nut und take off operating lever.

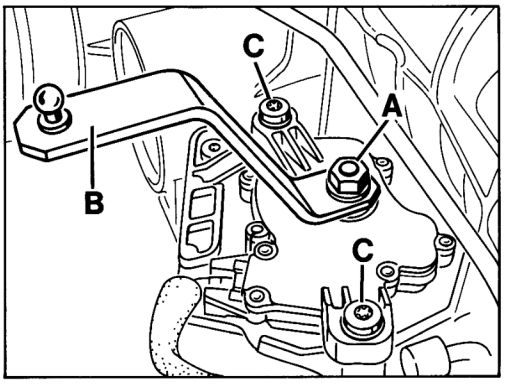

1271-37

A = Hexagon head nut
B = Operating lever
C = Fastening screws

6. Take out fastening screws „C" using Torx socket T 27 and take off switch.

Installing

Fit in reverse order, observing the following items:

1. Selector shaft in transmission must be set to „N".

2. Place switch into position and screw in fastening screws only so far that the switch can still be moved in the slots.

Note

The switch can only be fitted to the selector shaft in one single position.

Printed in Germany – VII, 1992

3. Adjust switch.

- Selector shaft must be set to „N". To achieve this, turn shaft in opposite direction of the direction of travel up to the stop (position „P"). Then shift selector shaft back two notches into position „N".

- Place Special Tool 9342 onto selector shaft and turn switch until the hole in the Special Tool lines up with the adjustment hole in the switch. Locate installation position of the switch in this position, using the pin.

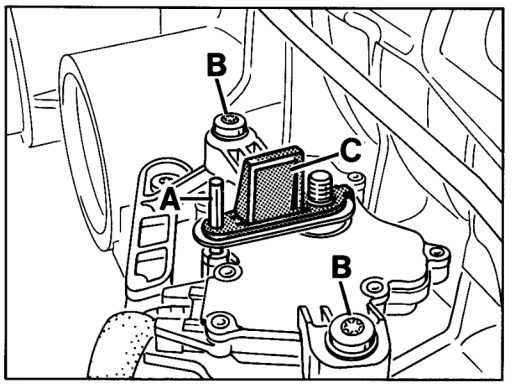

1272-37

A = Locating pin
B = Fastening screws
C = Special Tool 9342

- Tighten fastening screws of switch to specified torque and take off Special Tool with locating pin.

4. Recheck adjustment of selector lever cable and correct if required (refer to page 37 - 213)

Adjusting bowden cable for selector device

1. Set selector lever to „N".

2. Remove rear muffler and shroud.

3. Unhook selector lever cable from operating lever.

Note

A clamp is provided to protect the ball socket from disengaging.

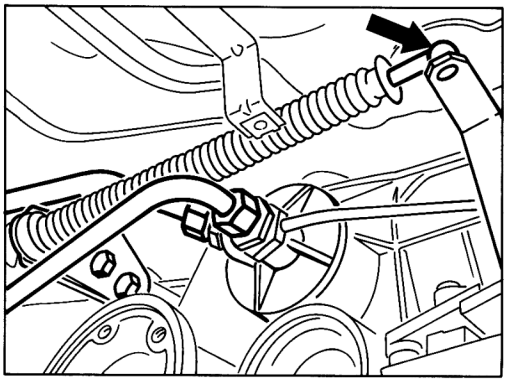

1145-37

4. Push and pull at the ball socket to determine overall play of the cable wire.

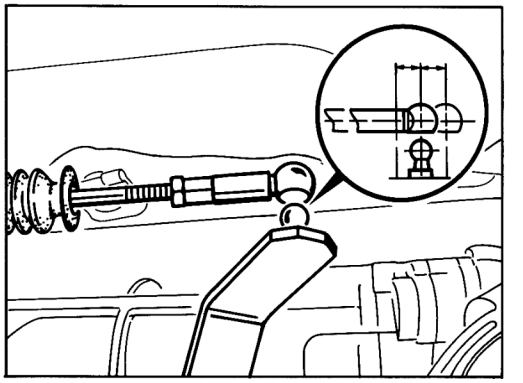

1268-37

5. Adjust ball socket to ball pin in center position with regard to overall play determined.

6. Tighten lock nut for ball socket to specified torque.

7. Check adjustment, shifting through all gears and check if the selector lever position indicator in the rev-counter matches the selector lever position. If it does not, check adjustment again and readjust multi-function switch
(refer to page 37 - 213).

Printed in Germany – VII, 1992

Checking the ATF level

Correct ATF level is an essential prerequisite for proper operation of the automatic transmission.

Check requirements:

Vehicle must be on a level surface

Engine running at idle

Handbrake pulled

Selector lever set to "N"

ATF temperature approx, 80°C

At 80°C operating temperature, the ATF level must be between the 80°C min. and max. marks.

To determine the precise ATF temperature, use System Tester 9288.

If required, top up with ATF fluid across the quick-fill device.

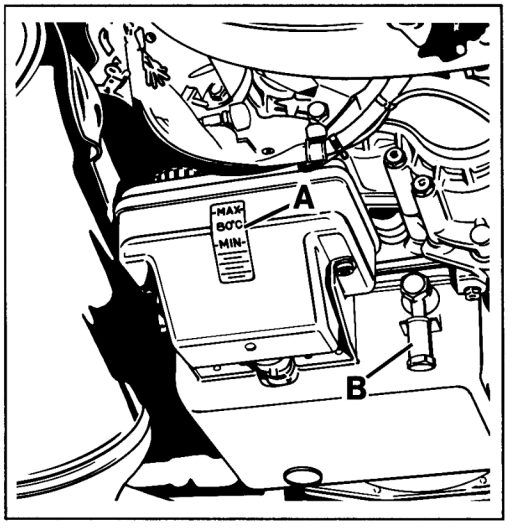

851-03

A = Check range at 80°C ATF temperature
B = Quick-fill device

Printed in Germany – VII, 1992

Changing ATF fluid

Capacity: approx. 7.0 l
Change quantity: approx. 3.0 l

Oil grade:
ATF Dexron II D

Change the ATF fluid and replace the ATF filter every 40,000 kms (25,000 miles).

When changing the ATF, place vehicle on a horizontal surface and stop the engine.

Drain ATF fluid, remove ATF pan and ATF filter (refer to p. 38 - 207).

Clean ATF pan.

Fit ATF filter using a new seal. Tighten bolts to specified torque.

Fit ATF pan with gasket. Tighten fastening screws to specified torque.

Fill in ATF fluid.

With the engine stopped, start by adding ATF fluid via the quick-fill adapter up to mark (1) on the reservoir.

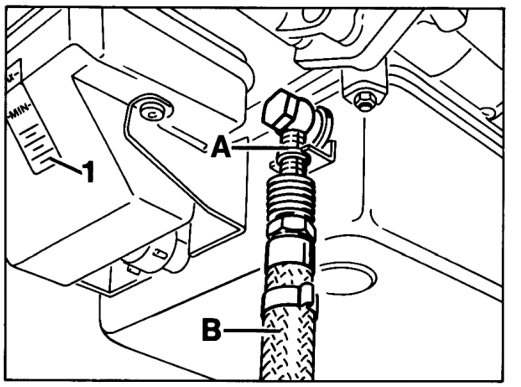

1260-38

A = Quick-fill adapter
B = Filler hose
C = Filling mark

With selector lever set to „P", start engine and let engine idle, observing ATF level at reservoir and topping up to mark (1) immediately if required.

Note

The ATF level in the transmission varies according to the fluid temperature.

Printed in Germany – VII, 1992

Drive vehicle to warm up transmission and check ATF fluid level at a temperature of 80 deg. C.

Make sure the fluid level is between the 80 deg. C MIN and MAX marks (refer to page 38 - 201).

To determine the precise ATF temperature, use System Tester 9288.

Replace seal for sealing nut and tighten nut to specified torque.

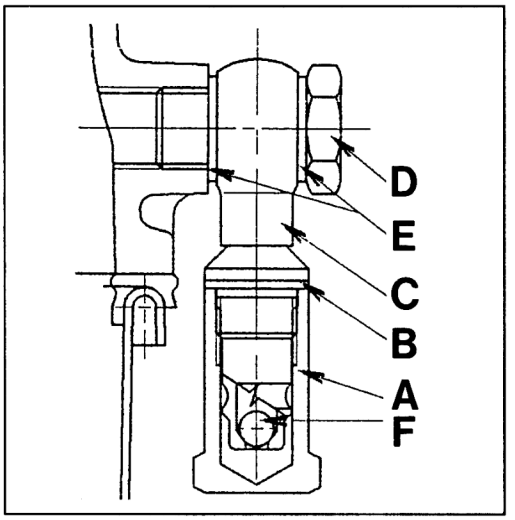

391-38

A = Sealing nut
B = Seal
C = Quick-fill adapter

Flushing ATF radiator and piping system

Note

If the ATF fluid is burnt or if friction lining abrasion residues or sludge traces are found in the ATF pan, do not limit repairs to rebuilding or replacing the transmission only. In addition, the ATF radiator and the piping system must be flushed with ATF fluid.

Fit auxiliary hose of ATF filler unit (refer to Shop Manual, Gr. 3) with Special Tool **9355** to ATF return line and flush radiator and piping system using the filler unit. Take care to catch overflowing fluid at the feed line.

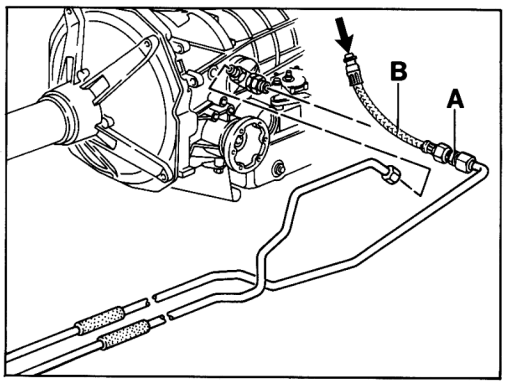

1783-38

A = Special Tool 9355
B = Auxiliary hose

Printed in Germany – XI, 1994

Removing and installing ATF radiator

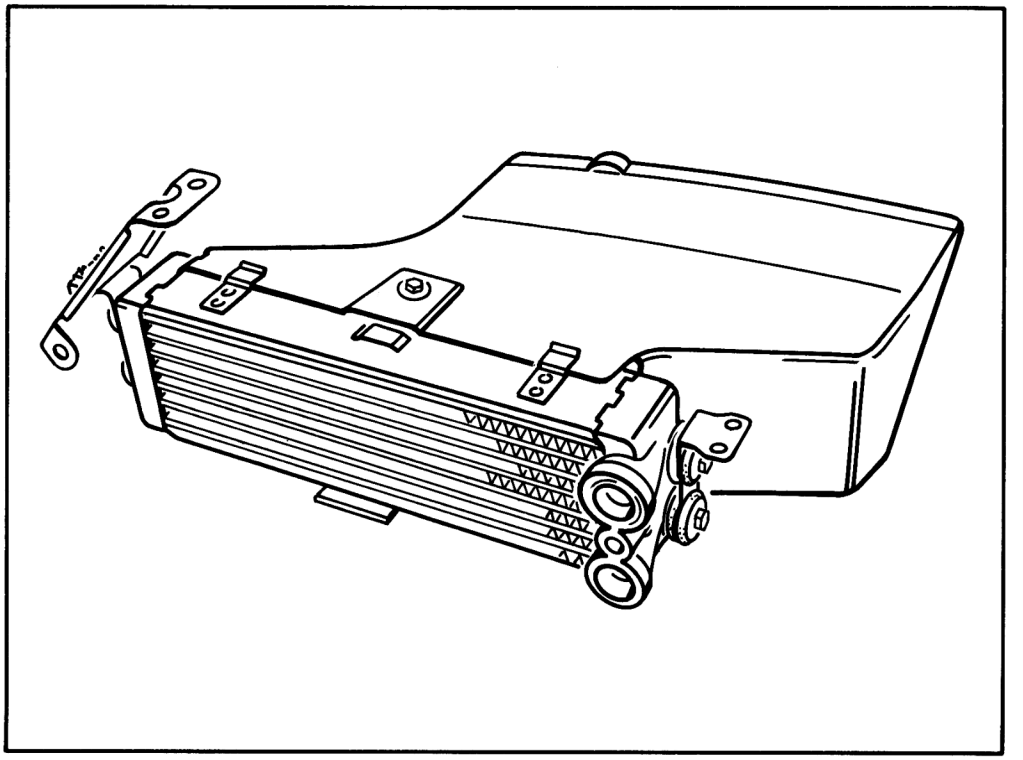

Printed in Germany – XI, 1994

Removing and installing ATF radiator

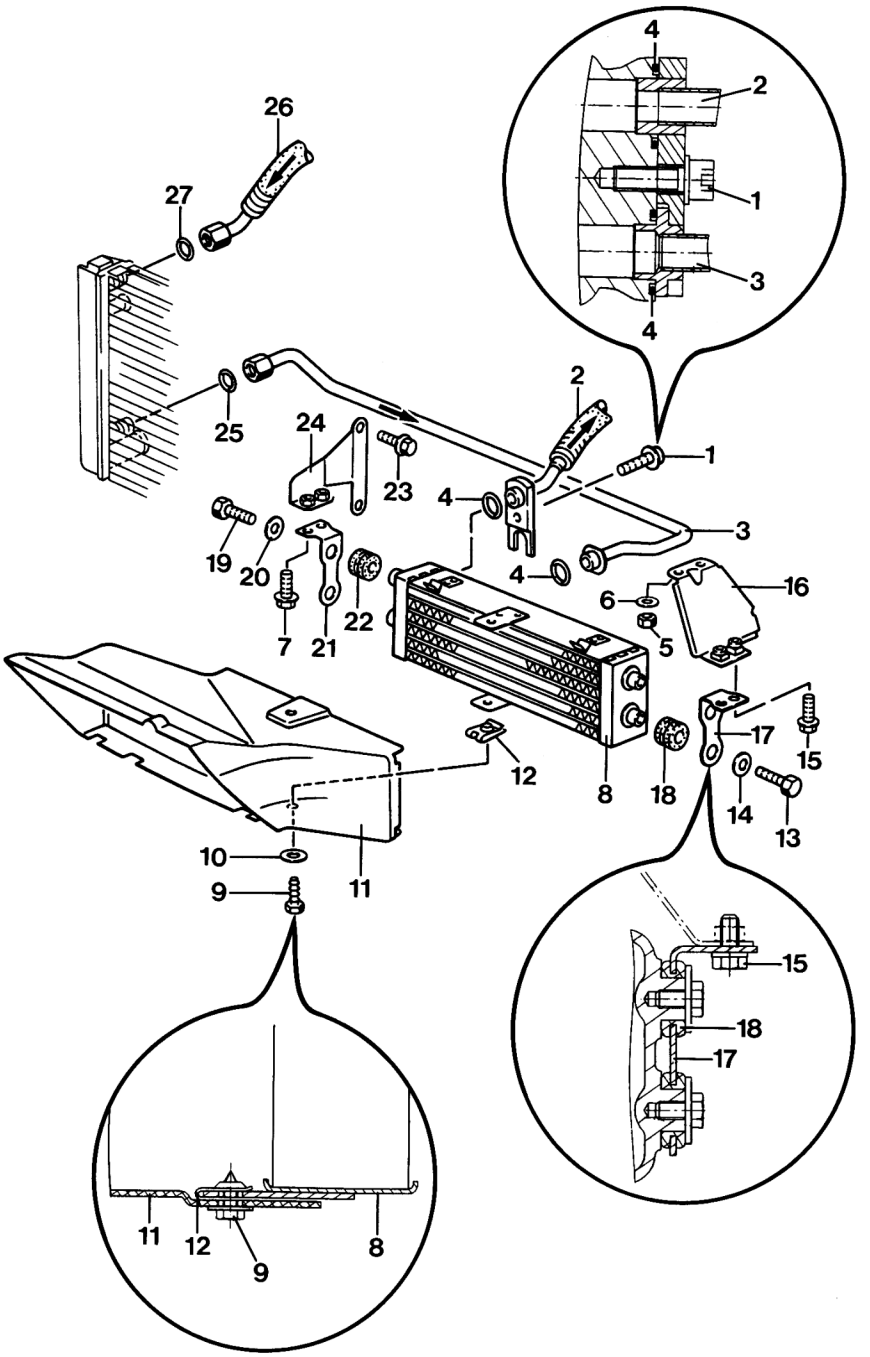

Printed in Germany – XI, 1994

No.	Designation	Qty.	Note: Removal	Note: Installation
1	Pan-head screw	1		M_A = 20 Nm (15 ftlb.)
2	ATF line	1		
3	ATF pipe	1		Tighten to 24 Nm (18 ftlb.) at coolant radiator
4	O-ring	2		Replace, coat with ATF
5	Hexagon head nut	2		M_A = 10 Nm (7 ftlb.)
6	Washer	2		
7	Hexagon head bolt	2		M_A = 10 Nm (7 ftlb.)
8	ATF radiator	1		
9	Sheet-metal screw	2		M_A = 2.8 Nm (2 ftlb.)
10	Washer	2		
11	Air duct	1		
12	Sheet-metal nut	2		
13	Hexagon head bolt	2		M_A = 10 Nm (7 ftlb.)
14	Washer	2		
15	Hexagon head bolt	2		M_A = 10 Nm (7 ftlb.)
16	Bracket	1		
17	Bracket	1		
18	Grommet	2		
19	Hexagon head bolt	2		M_A = 10 Nm (7 ftlb.)
20	Washer	2		
21	Bracket	1		
22	Grommet	2		
23	Hexagon head bolt	2		M_A = 10 Nm (7 ftlb.)
24	Bracket	1		
25	O-ring	1		As for No. 4
26	ATF pipe	1		Tighten to 24 Nm (18 ftlb.) at coolant radiator
27	O-ring	1		As for No. 4

Printed in Germany – XI, 1994

Removal and installation notes

Note

The ATF radiator is located in the vehicle front end to the left of the coolant radiator.

Removal

1. Remove engine guard and lower front end paneling (refer to Vol. III, page 63-2).

2. Undo front part of wheel housing liner.

3. Separate ATF pipes from radiator and catch overflowing fluid.

4. Undo radiator mount (hexagon head nuts No. 5 and hexagon head bolts No. 7) and take out radiator complete with air duct.

Note

Plug radiator connections and ATF lines with caps or plugs to prevent ingress of dirt or humidity.

Installation

1. Install in reverse order.

2. Top up with ATF fluid (refer to page 38 - 203).

Printed in Germany – XI, 1994

Removing and installing inductive engine speed pickup

Removal

Note

The inductive pickup is fitted in the transmission side cover and may be replaced with the engine installed.

1. Unlatch and pull off connector.

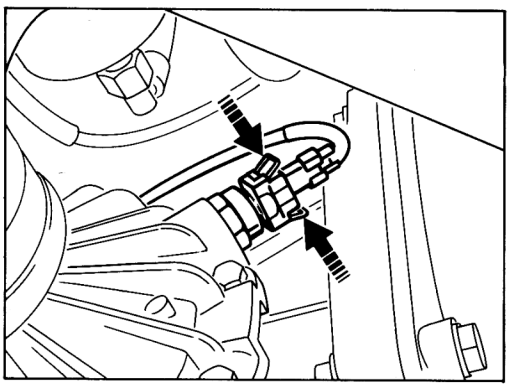

1262-38

2. Screw out inductive sensor.

Installation

1. Screw in inductive sensor with new round seal and tighten to specified torque.

2. Refit connector in correct position.

Printed in Germany – VII, 1992

Removing and installing hydraulic control unit

Removal

Note

The control unit is removed along with the transmission wiring harness.

1. Drain ATF fluid.

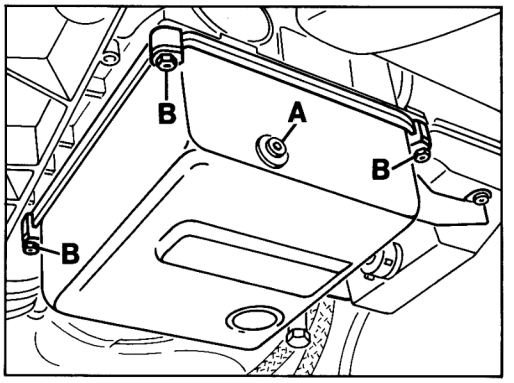

1258-38

A = Bayonet lock
B = ATF pan mounting (hexagon head nut with washer)

2. Remove breather hoses from reservoir and remove ATF pan complete with reservoir.

3. Disconnect connector from transmission socket, turning bayonet lock to the left and pulling off connector.

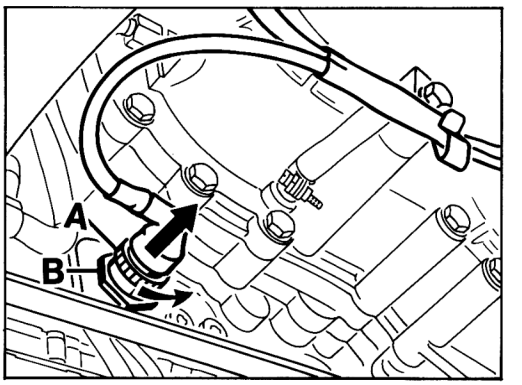

A = Bayonet lock
B = Hexagon head nut (A/F 30)

1259-38

4. Unscrew hexagon nut for socket.

5. Remove ATF filter.

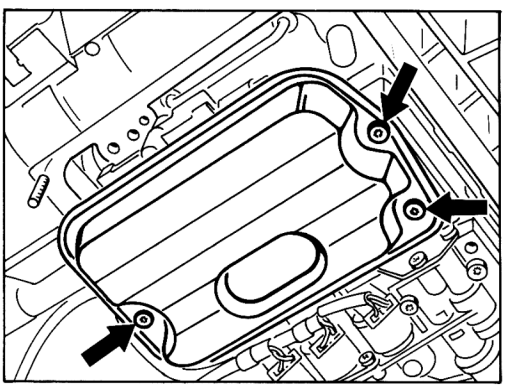

1257-38

Printed in Germany – VII, 1992

6. Screw out six fastening screws (12 mm head dia.) and take offcontrol unit along with wiring harness.

Note

Do not leave control unit suspended at wiring harness !

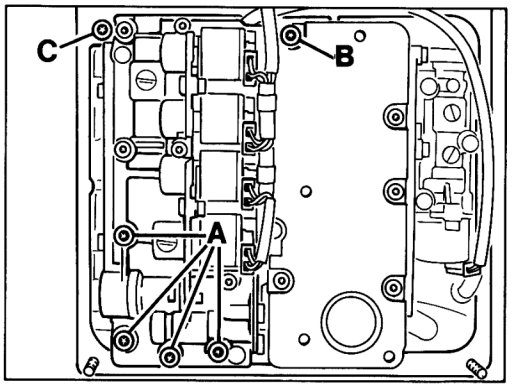

1267-38

A = Screw length 80 mm
B = Screw length 70 mm
C = Screw length 27 mm

Installation

1. Set selector lever to "P".

2. Also set selector slide at control unit to "P", pulling out the selector lever all the way.

3. Place control unit on a suitable support (e.g. transmission jack) at installation height.

4. Insert socket of transmission harness in correct position, using a round seal. Flatted side is used to prevent inadvertent rotation. Fix hexagon nut and tighten to specified torque.

Note

Do not leave control unit suspended at wiring harness.

5. Install control unit in such a manner that the pin of the detent disc engages in the cutout of the selector slide.

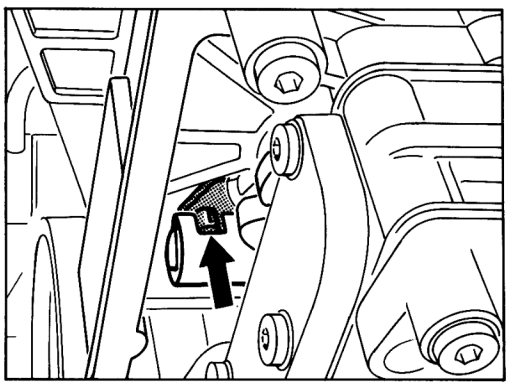

1263-38

Printed in Germany – VII, 1992

6. Tighten fastening screws to specified torque.

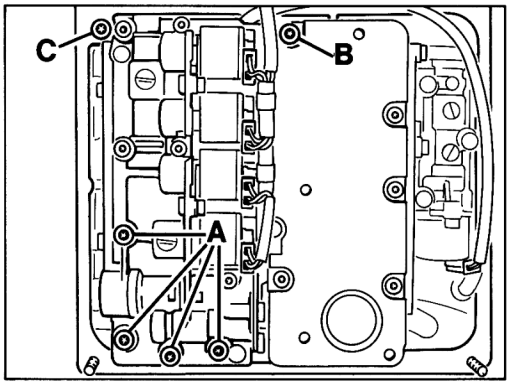

1267-38

A = Screw length 80 mm
B = Screw length 70 mm
C = Screw length 27 mm

7. Fit ATF filter complete with sealing ring and tighten fastening screws to specified torque.

8. Connect wiring harness to transmission socket, engaging connector carefully into socket (fits only in one position) and locking it by turning the bayonet lock to the right.

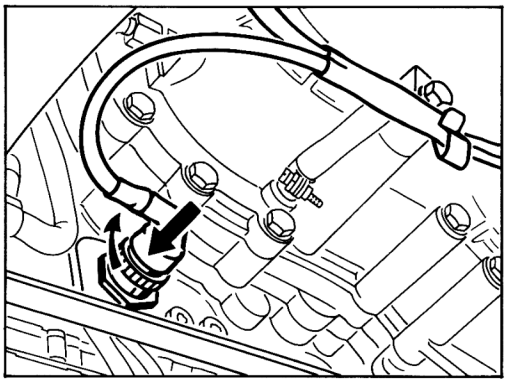

1259-38

9. Place solenoid in round groove to ATF pan, place gasket into position and tighten pan using the retaining brackets.

10. Fit bleeder hoses to reservoir.

11. Fit ATF drain plug with new seal and tighten to specified torque.

12. Fill in ATF fluid (refer to page 38 - 203).

Printed in Germany – VII, 1992

Removing and installing transmission wiring harness

Removal

1. Remove hydraulic control unit (refer to page 38 - 207).

2. Mark connector sleeves for reinstallation and pull them off the solenoids.

3. Open up tabs and take off wiring harness.

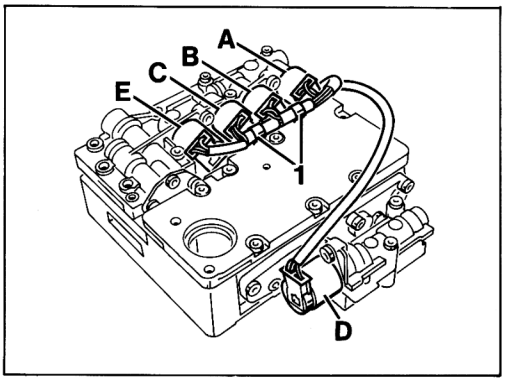

1261-38

1 = Tabs
A = Solenoid 1
B = Solenoid 3
C = Solenoid 2
D = Solenoid 4
E = Solenoid for pressure regulator

Installation

1. Push sleeves for solenoids all the way up to the stop.

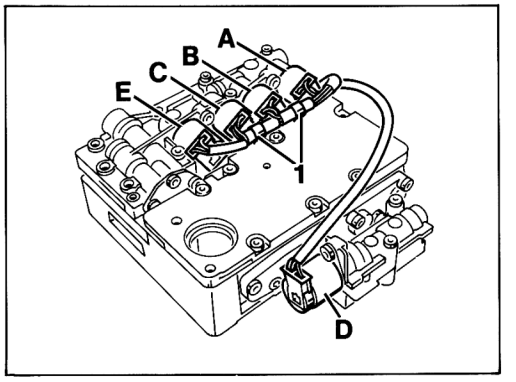

1261-38

	Solenoids	Wiring colors
A	Solenoid 1	purple and red
B	Solenoid 3	purple and green
C	Solenoid 2	purple and grey
D	Solenoid 4	purple and yellow
E	Pressure regulator	purple and blue

2. Fit wiring harness using the tabs.

Printed in Germany – VII, 1992

Removing and installing solenoids

Removal

Note

When the solenoids are removed and fitted, the control unit may remain installed.

To replace solenoids 1, 2 and 3, however, the solenoid housing (1) must be removed.

The installation position of solenoid 4 is shown on page 38-211.

1. Remove ATF pan (refer to page 38 - 207).

2. Pull connector sleeves off the solenoids.

3. Screw out fastening screws and and take off valve housing complete with valves. (Transmission is removed in figure)

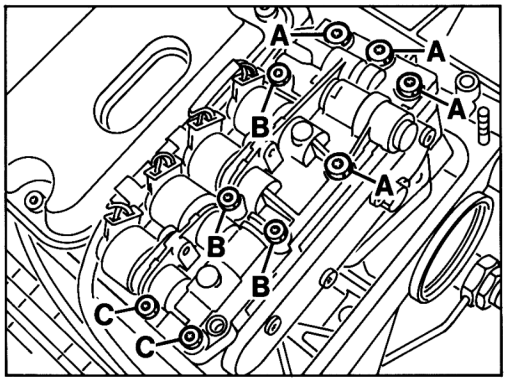

1273-38

A = Bolt M 6 x 80
B = Bolt M 5 x 70
C = Bolt M 5 x 65

4. Mark installation position of solenoids for re-assembly, remove retaining brackets and take out solenoids.

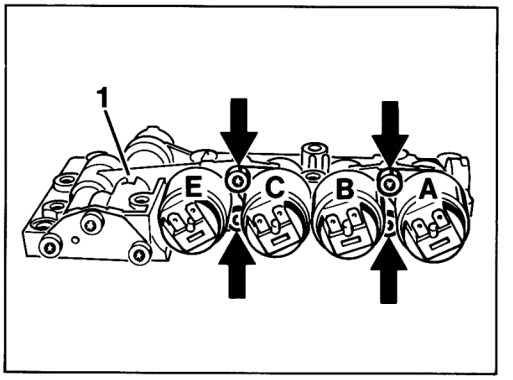

1274-38

A = Solenoid 1
B = Solenoid 3
C = Solenoid 2
E = Solenoid for pressure regulator
1 = Solenoid housing

Installation

Note

The solenoid for the pressure regulator (E) may only be replaced complete with the solenoid housing (1).

Install in reverse order.

1. Fit retaining brackets for solenoids with the lugs facing the solenoid housing.

Printed in Germany – VIII, 1992

Removing and installing piston for brake band C'

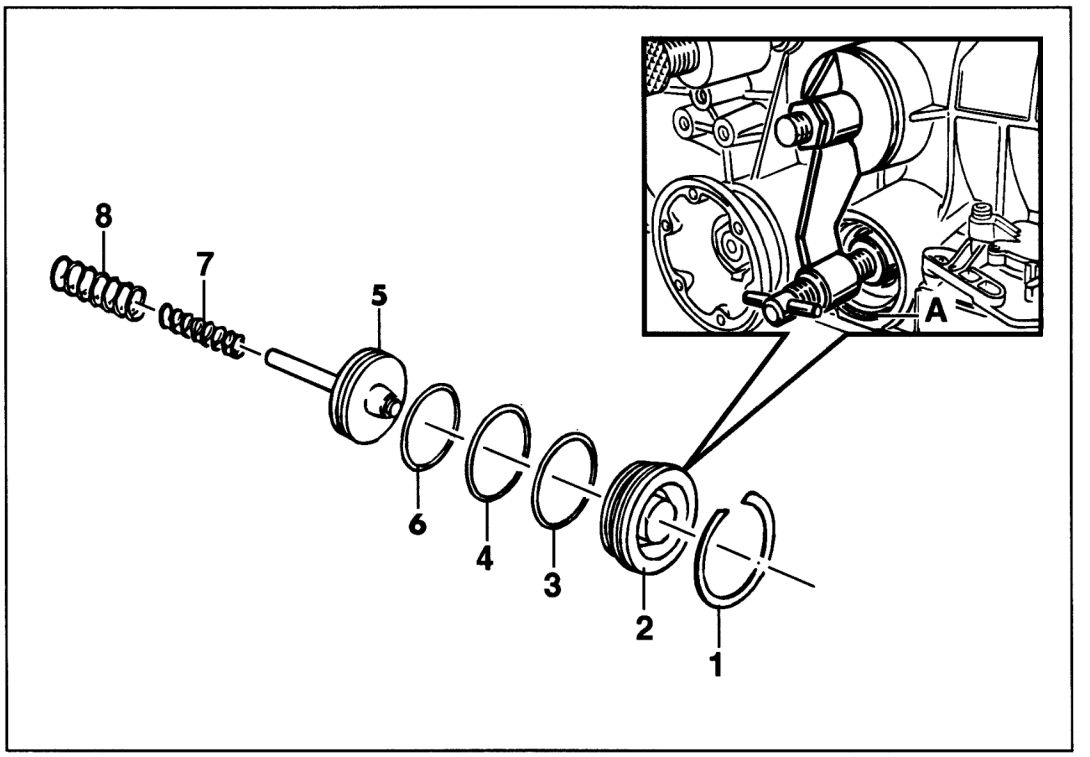

No.	Designation	Qty.	Note: Removal	Installation
1	Snap ring (A)	1	Press off cover with Special Tool 9353	Check for correct seating
2	Cover	1	To unseat cover, apply light blows to center of cover if required	
3	Round seal	1		Replace, coat with petroleum jelly
4	Round seal	1		As for No. 3
5	Piston	1	Do not dismantle	
6	Round seal	1		As for No. 3
7	Thrust spring	1		
8	Thrust spring	1		

Printed in Germany – XI, 1994

Removing and installing spacer

Removal

1. Remove spur gear drive and parking lock gear (refer to page 39 - 203).

2. Screw out retaining screw of spacer and pull out spacer with Special Tool **9351**.

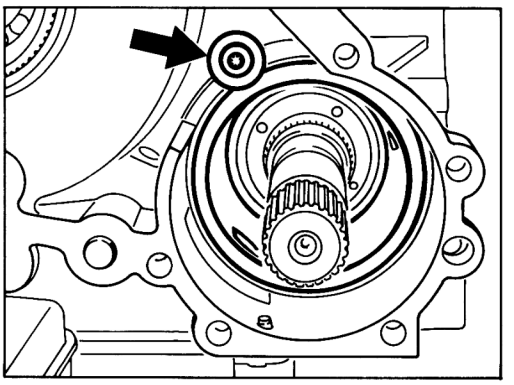

1639-38

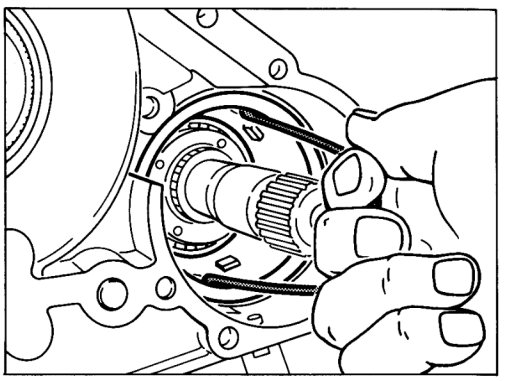

1638-38

Installation

1. Coat round seal and shaft seals with petroleum jelly and press carefully into the housing until they are seated against the stop.

2. Tighten retaining screw to **23 Nm** (17 ftlb.).

3. Fit parking lock gear and spur gear drive.

Printed in Germany – XI, 1994

Removing and installing spacer seals

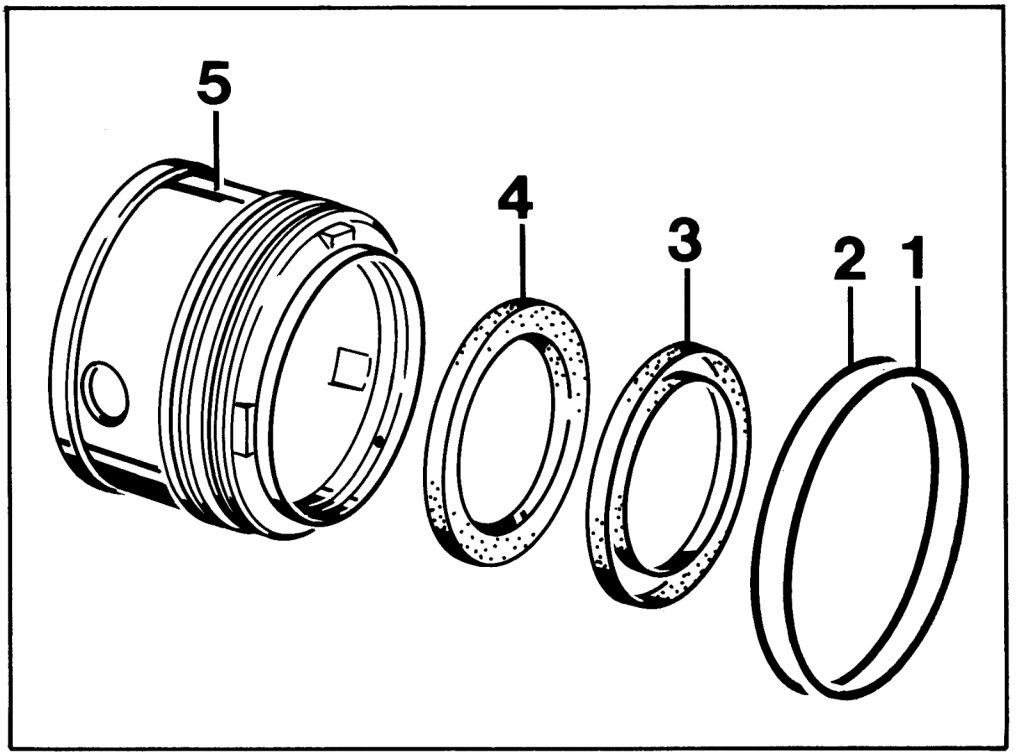

No.	Designation	Qty.	Note: Removal	Note: Installation
1	Round seal	1		Replace, coat with petroleum jelly. Do not confuse with No. 2
2	Round seal	1		As No. 1. Do not confuse with No. 1.
3	Shaft seal	1		Replace. Press in flush. Sealing lip points towards outside.
4	Shaft seal	1		Replace. Use Special Tool 9350 to press in to stop. Sealing points inside.
5	Spacer	1		

Printed in Germany – XI, 1994

Checking end play

Specification: 0.1...0.3 mm

Note

The end play must be checked whenever the transmission is assembled and must be corrected with adjusting shim No. 8 (see page 38 - 224) if required.

1. Assemble transmission fully and fit dial gauge with Special Tool **9356** to the turbine shaft. Make sure the measuring surface of the dial gauge rests on the stator shaft.

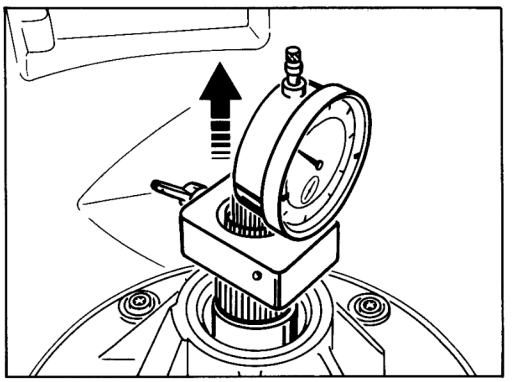

1825-38

Set dial gauge to "0" and pull at Special Tool to determine end play.
Fit a thicker or thinner shim as required if the reading deviates from the specification.

Printed in Germany - XII, 1994

Removing and installing ATF pump

Tools

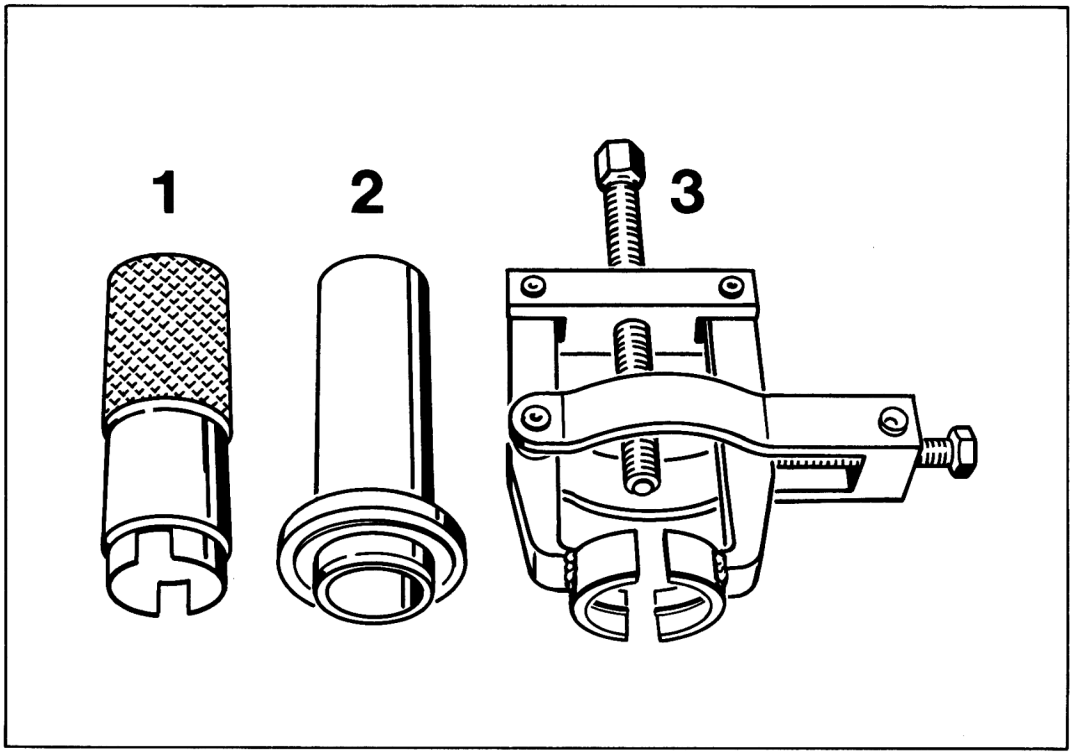

No.	Designation	Special tool	Order number	Explanation
1	Assembling tool	9354	000.721.935.40	
2	Thrust piece	9344	000.721.934.40	
3	Puller	9352	000.721.935.20	

Printed in Germany - XII, 1994

Removing and installing ATF pump

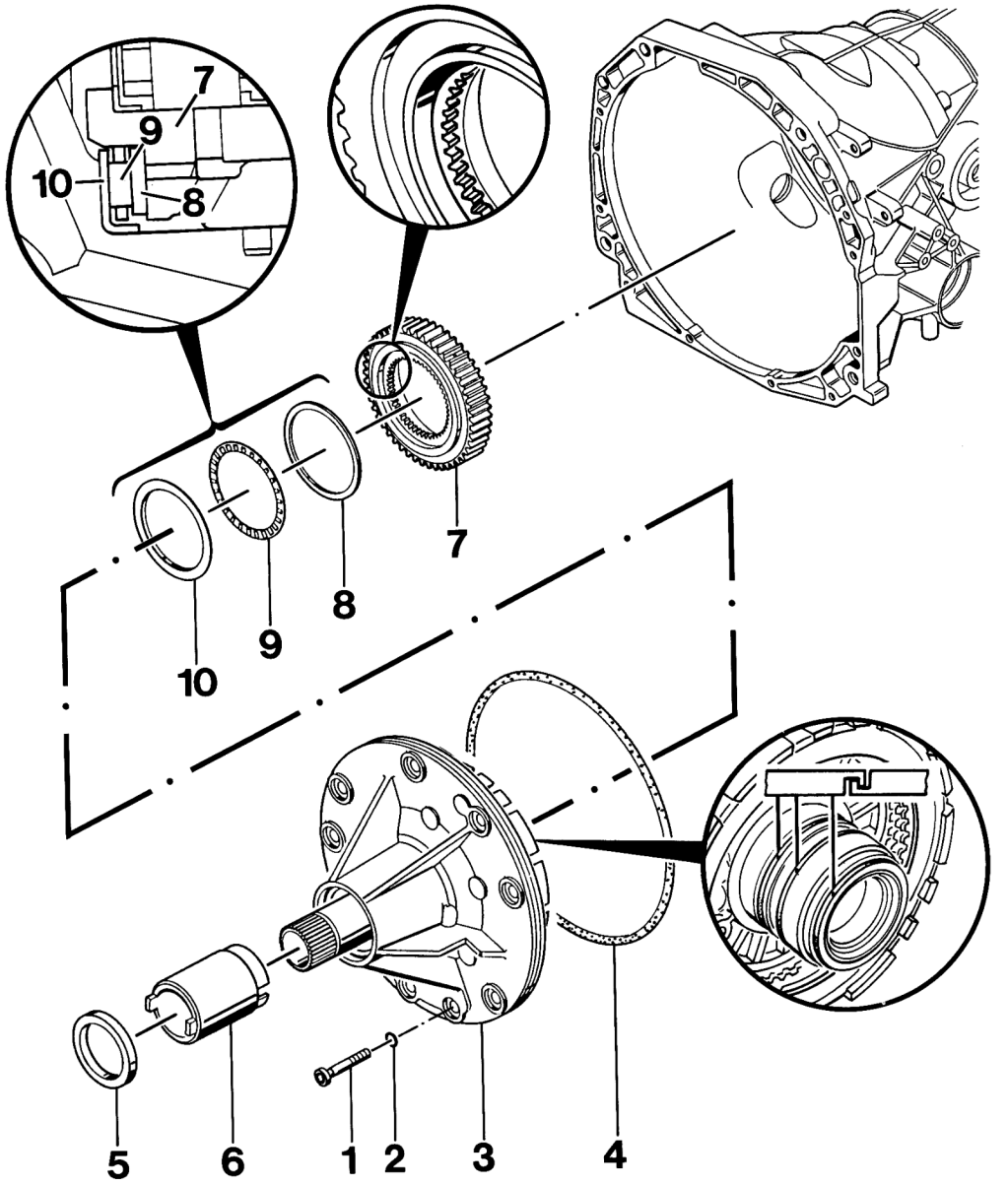

1828-38

No.	Designation	Qty.	Removal	Note: Installation
1	Cylinder bolt (Torx T 27)	9		M_A = 10 Nm (8 lftb.)
2	Seal	9		Replace
3	ATF pump with intermediate plate and brake "C"	1	Remove with Special Tool 9352	Check rectangular rings and coat with petroleum jelly. Fit along with freewheel assembly
4	Round seal	1		Replace. Coat with petroleum jelly
5	Oil seal	1		Push in to stop with Special Tool 9344
6	Spacer tube	1		Must engage into dogs of pump gear
7	Freewheel (2nd gear)	1		
8	Adjusting shim	X	Record thickness for reassembly	Recalculate if required (refer to page 38 - 221)
9	Needle roller thrust bearing	1		
10	Angular disc	1		Angled side faces thrust bearing No. 9

Printed in Germany - XII, 1994

Removal and refitting notes

Removal

1. Remove transmission, torque converter and drive shaft (refer to pages 37 - 201, 32 - 201, 39 - 208) and attach transmission with bracket **9343** to the assembly stand so that the ATF pump faces up.

2. Remove torque converter oil seal .

3. Mark installation position of ATF for reassembly and undo mounting bolts (Torx T 27).

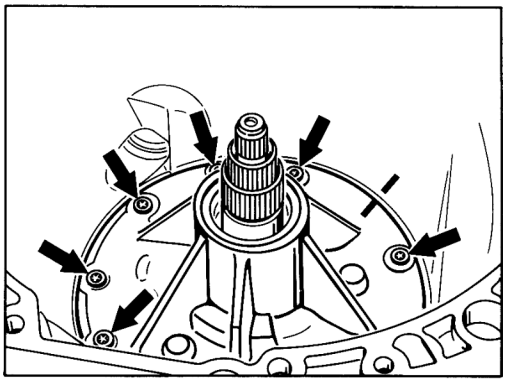

1827-38

4. Pull ATF pump out of housing using Special Tool **9352** and take off pump carefully.

Note

This operation must be carried out very carefully to prevent the inner transmission components slotted in place from being pulled out at the same time.

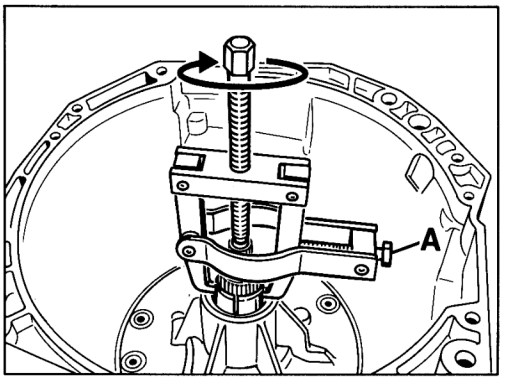

1826-38

A = Tighten only finger-tight

5. Do not turn transmission on assembly stand (to prevent inner components from dropping out).

Installation

1. Pull freewheel ass. off the cylinder of clutch B.

2. Use a depth gauge to check inner transmission components. Assembly is correct if the upper edge of cylinder B is approx. 10 mm below the step in the transmission housing and the engine shaft protrudes approx. 22 mm beyond the turbine shaft.

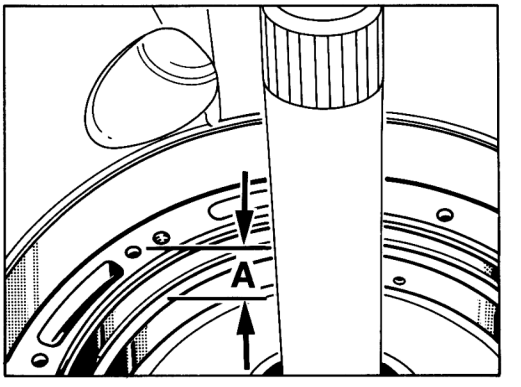

A = approx. 10 mm

Printed in Germany - XII, 1994

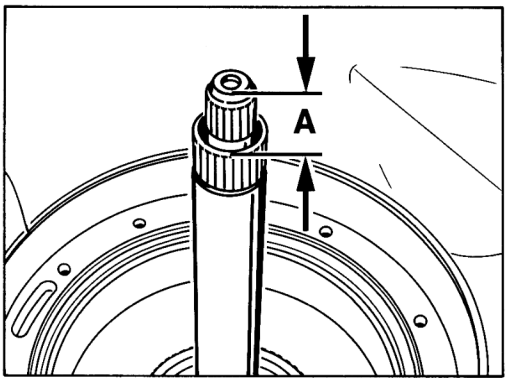

1841-38

A = approx. 22 mm

3. Install freewheel into correct position of internal splines of brake C.

Note

The freewheel assembly must be fitted in such a way that the flange of the inner race faces the ATF pump.

4. Turn transmission on assembly stand so that the transmission opening points slightly upwards.

Note

Under no circumstances must the transmission opening point down as this would cause the transmission parts to drop out.

5. Install pump assembly complete with freewheel carefully. Make sure that the freewheel assembly does not slip out of the splines.

6. Turn transmission on assembly stand so that the ATF pump faces up.

Note

Assembly is correct if the pump unit rests with a slight spring preload on the housing and the turbine shaft protrudes approx. 18 mm beyond the stator shaft.

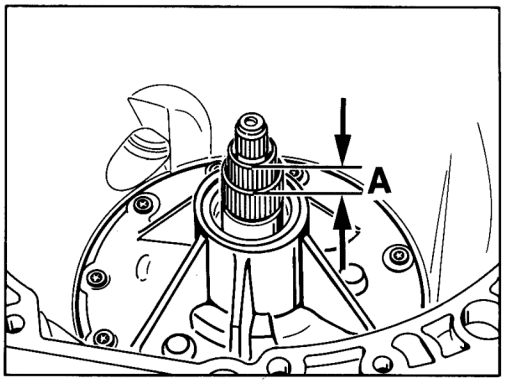

1827-38

A = Approx. 18 mm

7. Check axial clearance (refer to p. 38 - 221).

Printed in Germany - XII, 1994

Dismantling and assembling ATF pump

Tools

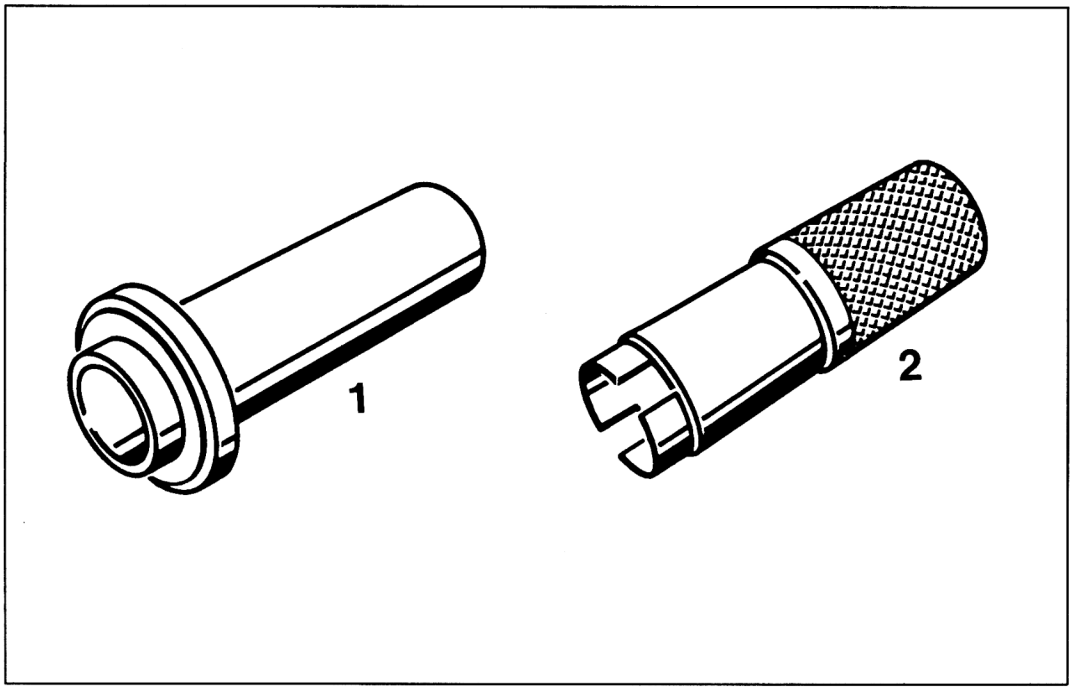

No.	Designation	Special Tool	Order Number	Explanation
1	Thrust piece	9344	000.721.934.40	
2	Assembly tool	9354	000.721.935.40	

Printed in Germany - XII, 1994

Dismantling and assembling ATF pump

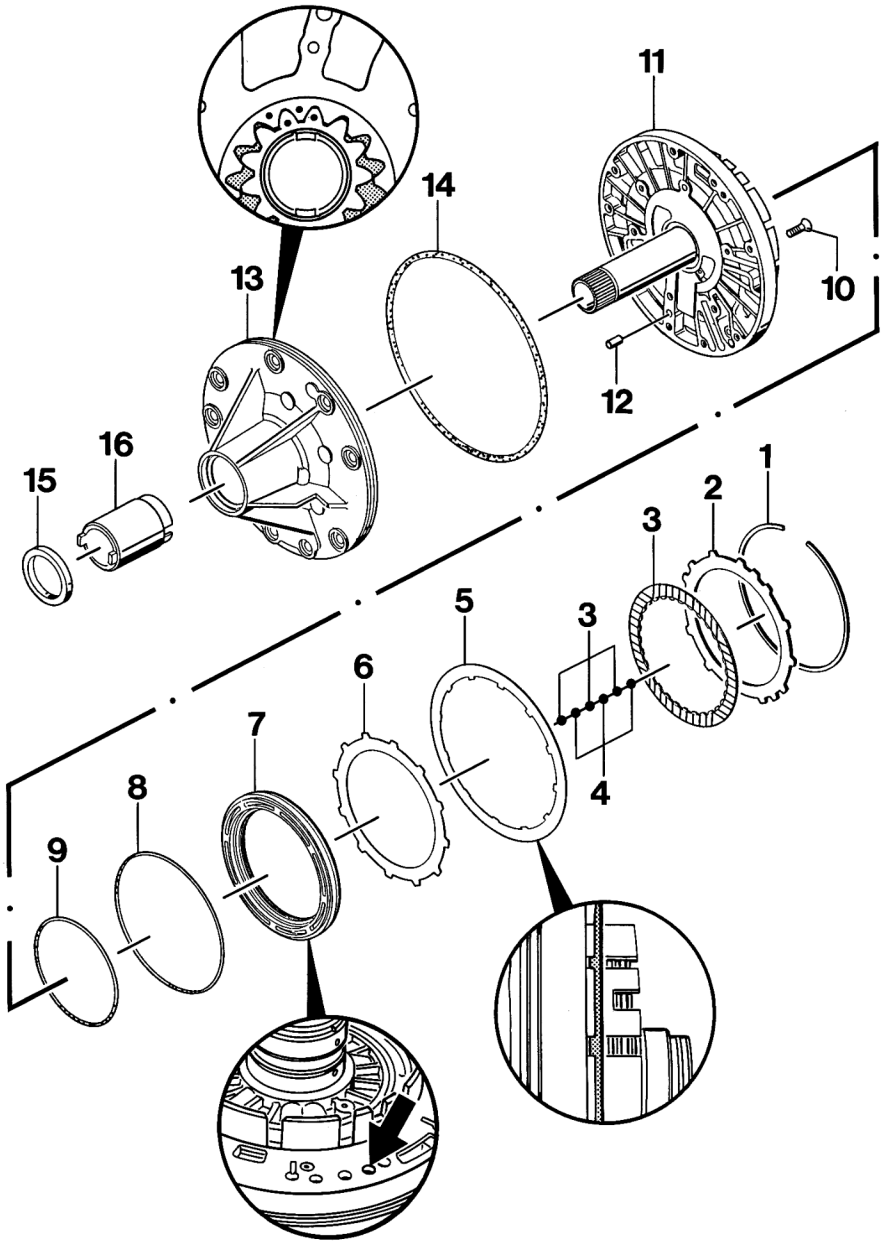

Printed in Germany - XII, 1994

No.	Designation	Qty.	Note: Removal	Installation
1	Snap ring	1		
2	End disc	1	Mark for reinstallation	Do not confuse with disc No. 4 or 6
3	Inner disc	4		
4	Outer disc	3		Identical with No. 6
5	Cup spring	1		
6	Outer disc	1		Identical with No. 4
7	Piston	1	Apply compressed air to push out of oil feed bore	Grease round seal (petroleum jelly) and press carefully into intermediate plate. Take care not to tilt piston. Use suitable sleeve if required (e.g. 9317)
8	Round seal	1		Replace. Coat with petroleum jelly
9	Round seal	1		Same as No. 8
10	Flat-head bolt	6		MA = 10 Nm (7 ftlb.)
11	Intermediate plate	1		The rectangular rings must be hooked into each other.
12	Straight pin	2		
13	ATF pump	1		Oil both pump gears with ATF and place into housing so that both installation marks face up. Use Special Tool 9354 to check that installed pump rotates freely.

Printed in Germany - XII, 1994

No.	Designation	Qty.	Note: Removal	Installation
14	Round seal	1		Same as No. 8
15	Oil seal	1		Push in to stop (using Special Tool 9344) only after fitting the complete intermediate plate assembly
16	Spacer tube	1		Must engage into dogs of pump gear

Printed in Germany - XII, 1994

Changing the transmission oil in rear-axle drive

Capacity: approx. 0,7 l

Oil quantity:
Hypoid transmission oil SAE 75 W 90 to API GL5 (MIL-L 2105 B), or SAE 90

1. Drain oil with the car standing on a level surface and the transmission at operating temperature.

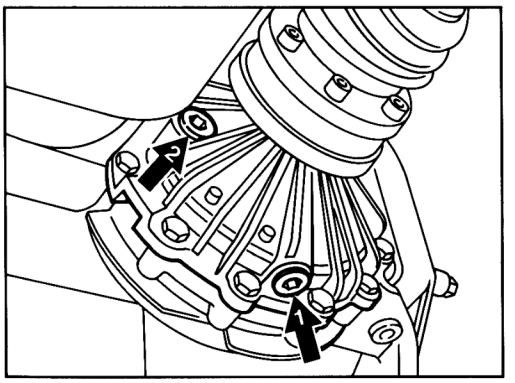

852-03

1 – Drain plug
2 – Filler plug

2. Clean filler and drain plugs, replace seals and tighten screws to specified torque.

3. With the vehicle on a level surface, fill in transmission oil until it overflows at the filler plug neck.

Printed in Germany – VII, 1992

Removing and installing spur gear drive

Note

The spur gear drive may be removed and fitted with the transmission remaining installed.

Removal

1. Take ATF spray line off housing.

2. Disconnect ATF breather hoses from reservoir.

3. Screw out twelve fastening bolts and lift off spur gear drive.
   If required, separate drive by applying light blows with a plastic mallet.

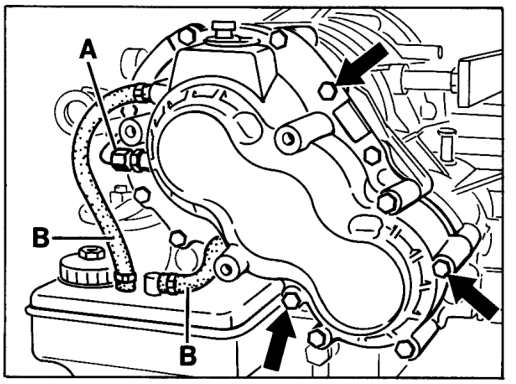

1276-39

A = ATF spray line
B = ATF breather hoses

Installation

1. Bond new gasket with grease (vaseline) to the housing and align correctly.

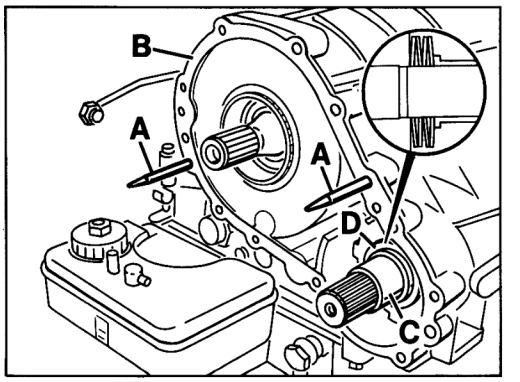

1275-39

A = Centering pins (Special Tool 9321)
B = Gasket
C = Bushing
D = 4 cup springs (two of each facing each other)

2. Place spur gear drive into position and tighten all fastening bolts to the specified torque.

Note

Due to the preload of the cup springs on the parking pawl gear, the spur gear drive cannot be pushed on manually all the way (to approx. 3 to 4 mm). Its final installation position is achieved by tightening the fastening bolts.

3. Fit ATF spray line to housing.

4. Fit ATF breather hoses to reservoir, using suitable hose clamps.

Printed in Germany – VII,1992

Replacing gasket between housing and housing flange of spur gear drive

1. Remove spur gear drive.

2. Turn out the three fastening bolts and take off flange.
   If required, loosen flange by applying light blows with a plastic mallet.

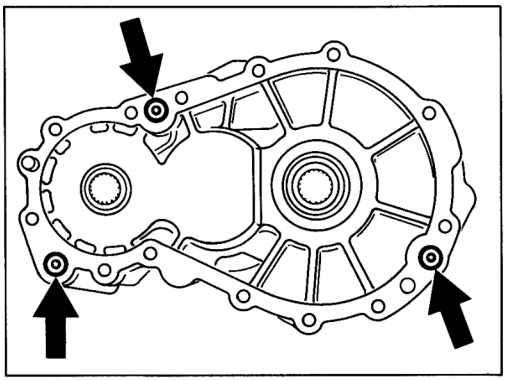

1277-39

3. Take off gasket.

4. Bond new gasket with grease (vaseline) to facilitate fitting, align gasket and bolt housing back to housing flange.

Printed in Germany – VII,1992

Removing and installing output shaft

Tools

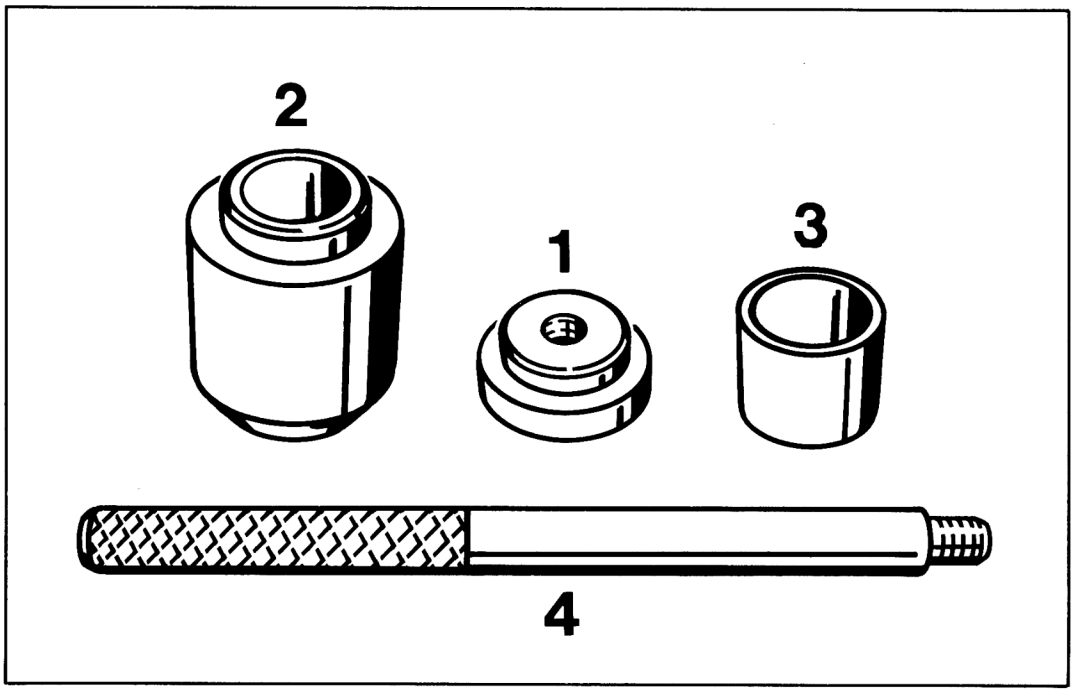

No.	Designation	Special Tool	Order number	Explanation
1	Thrust piece	9345	000.721.934.50	
2	Thrust piece	9347	000.721.934.70	
3	Thrust piece	9349	000.721.934.90	
4	Threaded pin	P 254	000.721.254.00	

Removing and installing output shaft

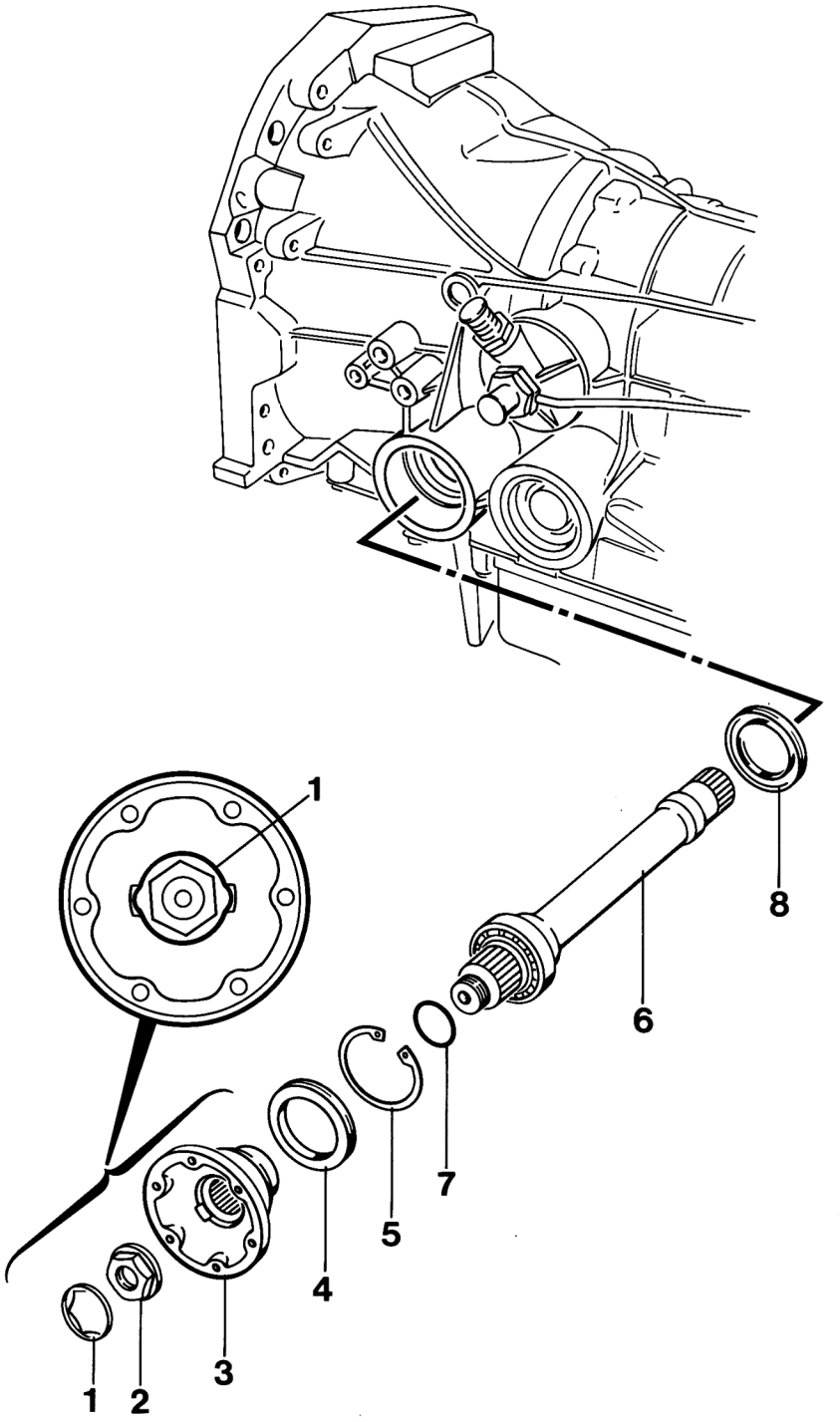

Printed in Germany – VIII, 1993

No.	Designation	Qty.	Note: Removal	Installation
1	Tab washer	1	Lever out with suitable screwdriver	Replace. Use Special Tool 9349 to press into stop.
2	Collar nut	1	Screw two M8 bolts into output flange and lock flange with suitable lever	Tighten **to 100 Nm** (74 ftlb.) and lock with tab washer.
3	Output flange	1		
4	Shaft seal	1	Lever out carefully with Special Tool **VW 681**, taking care not to damage the sealing face in the housing.	Replace. Pack space between dust lip and sealing lip with multi-purpose grease. Coat outside with a thin coat of vaseline and press in manually using Special Tool **9347** until it is seated at the snap ring. If required, apply light hammer blows to drive it in up to the stop. The sealing lip must face the snap ring.
5	Snap ring	1		Check for correct seating
6	Output shaft (with ball bearing)	1	Tighten output flange with collar nut and pull out complete with shaft.	Pack ball bearing with approx. 25 grams of grease (e.g. Shell Alvania R3).
7	Round seal	1		Replace, coat lightly

Printed in Germany – VIII, 1993

No.	Designation	Qty.	Note: Removal	Installation
8	Shaft seal	1	Pull out with suitable internal puller (e. g. Kukko, No. 21/6) and puller tool **VW 771/1**	Replace. Pack space between dust lip and sealing lip with multi-purpose grease. Coat outside with a thin coat of vaseline and press in manually using Special Tool **9345** until it is seated against the stop. If required, apply light hammer blows to drive it in up to the stop. **The sealing lip must face the ball bearing of the output shaft.**

Note

The output shaft may also be removed and installed with the transmission remaining installed.

Printed in Germany – VIII, 1993

Removing and installing differential

Tools

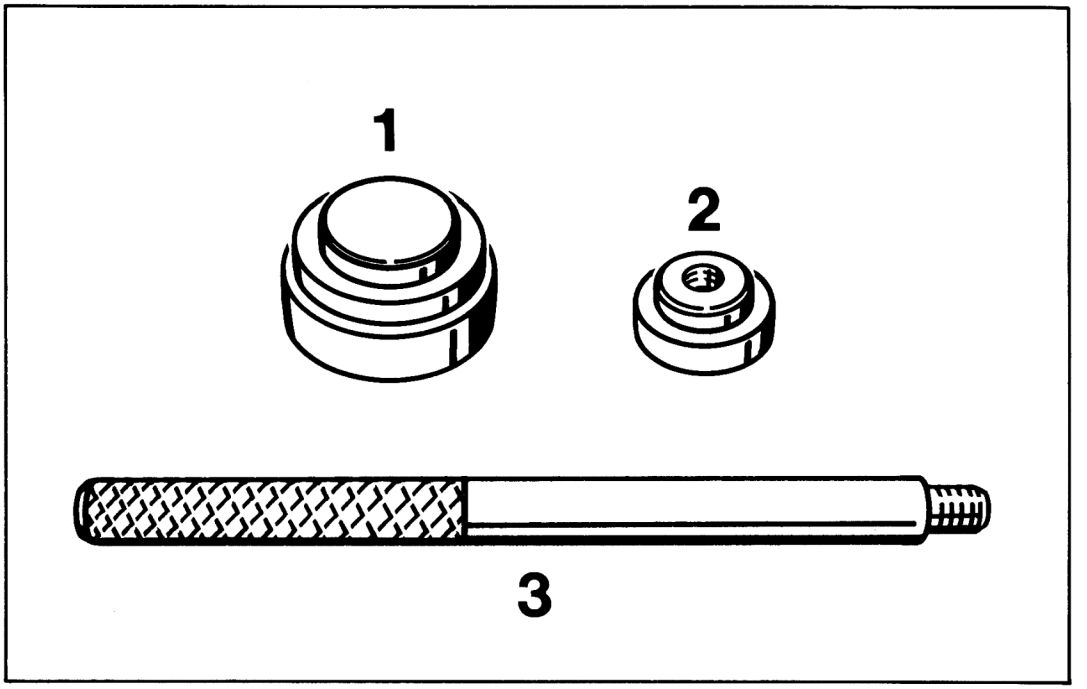

No.	Designation	Special Tool	Order number	Explanation
1	Thrust piece	9346	000.721.934.60	
2	Thrust piece	9348	000.721.934.80	
3	Threaded stud	P 254	000.721.254.00	

Printed in Germany – VIII, 1993

Removing and installing differential

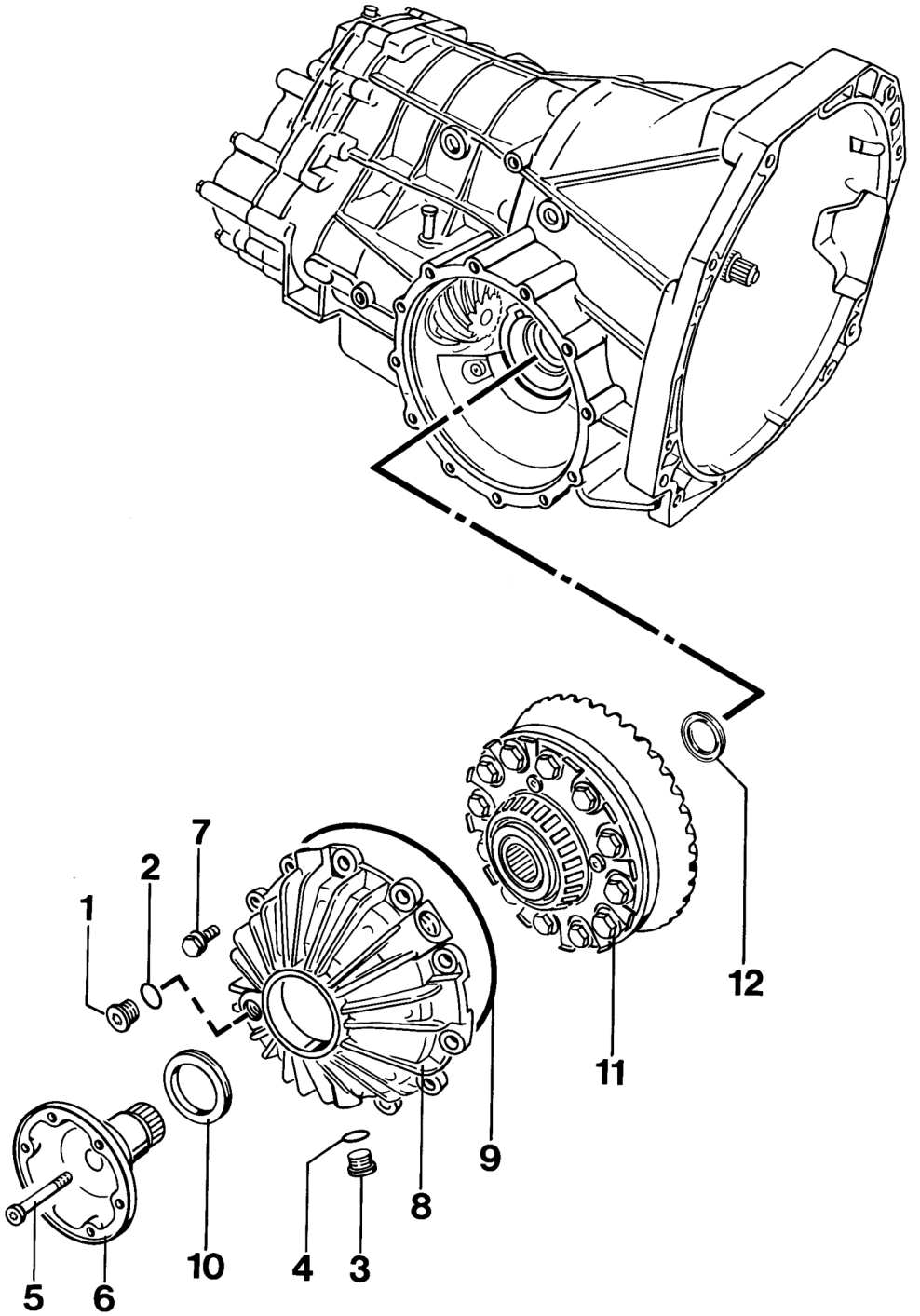

Printed in Germany – VIII, 1993

No.	Designation	Qty.	Note: Removal	Installation
1	Plug (M 18 x 1.5)	1		Tighten to **50 Nm** (37 ftlb.)
2	Seal	1		Replace
3	Plug M 16 x 1.5	1		Tighten to **40 Nm** (30 ftlb.)
4	Seal	1		Replace
5	Waisted-shank bolt	1		Must always be replaced, tighten to **25 Nm** (18 ftlb.)
6	Output flange	1		
7	Hexagon head bolt	12		Tighten to **23 Nm** (17 ftlb.)
8	Cover	1		
9	Round seal	1		Replace, oil lightly
10	Shaft seal	1	Lever out with **VW 681** with the transmission remaining fitted. Make sure the sealing face of the cover is not damaged.	Replace. Pack space between dust lip and sealing lip with multi-purpose grease. Drive in with Special Tool **9346** until it is seated against the stop.
11	Differential	1		
12	Shaft seal	1	Remove output shaft (refer to page 39 - 207). If the transmission remains installed, use a suitable lever (e.g. hook of twin-arm puller) to lever it out carefully. If the transmission has been removed, push out from inside. Make sure the sealing face of the housing is not damaged.	Replace. Pack space between dust lip and sealing lip with multi-purpose grase. Coat outside lightly with vaseline and push in manually with Special Tool **9348**, observing correct position **(sealing lip faces differential)**. If required, apply light hammer blows to drive it in to stop.

Note

The differential may also be removed and installed with the transmission remaining installed.
In this case, support transmission and undo transmission suspension (refer to removal and installation of transmission on page 37 - 201).

Printed in Germany – VIII, 1993

page

Front wheel suspension

Torque specifications - Front axle . . . . . 40 - 01
Technical Data 968 / 968 CS . . . . . 40 - 03
Adjusting the front wheel bearings . . . . . 40 - 1
Dismantling and assembling suspension . . . . . 40 - 3

The following topics of Repair group 40 are described in the Repair Manual Type 944, vol. 3:

Wheel bearings, disassembling and assembling . . . . . 40 - 3

Rear wheel suspension, drive shaft

Torque specifications - rear axle . . . . . 42 - 01
Technical data 968 / 968 CS . . . . . 42 - 03
Dismantling and assembling suspension . . . . . 42 - 1

The following topics of Repair group 42 are described in the Repair Manual Type 944, vol. 3:

Aluminium trailing arms, disassembling and assembling . . . . . 42 - 9

Wheels, tires, alignment

Wheels and tires . . . . . 44 - 01
Fitting 16" and 17" cup design wheels to the vehicle . . . . . 44 - 03
Wheel mounting as of MY '94 . . . . . 44 - 04
Wheels and tires of the 968 CS . . . . . 44 - 05
Sample measuring chart . . . . . 44 - 1
Adjustment values for wheel alignment . . . . . 44 - 2
Suspension alignment . . . . . 44 - 5
Tire fitting . . . . . 44 - 11

Anti-lock braking system

The following topics of Repair group 45 are described in the Repair Manual Type 944, vol. 3:

General . . . . . 45 - 01
Position of ABS components . . . . . 45 - 03
Important notes - troubleshooting and ABS test program . . . . . 45 - 05
Hydraulic unit, removing and installing . . . . . 45 - 1

Printed in Germany – XI, 1994

Brakes, mechanical

Technical data . . . . . 46 - 01
Torque specifications - mechanical brake system . . . . . 46 - 05
Checking thickness of brake pads . . . . . 46 - 1
Removing and installing brake pads . . . . . 46 - 3
Adjusting the brake pushrod . . . . . 46 - 5
Checking stop light switch adjustment . . . . . 46 - 6
Checking and adjusting the parking brake . . . . . 46 - 7
Checking brake disc lateral runout . . . . . 46 - 8
Checking brake disc thickness . . . . . 46 - 10

The following topics of Repair group 46 are described in the Repair Manual Type 944, vol. 3:

Front-wheel brakes, disassembling and assembling . . . . . 46 - 9
Rear-wheel brakes, disassembling and assembling . . . . . 46 - 11

Brake, hydraulics, regulator, booster

Torque specifications - hydraulic brake system . . . . . 47 - 01
Changing the brake fluid / bleeding the brakes . . . . . 47 - 1

The following topics of Repair group 47 are described in the Repair Manual Type 944, vol. 3:

Brake booster, removing and installing . . . . . 47 - 7

Steering

Torque specifications - steering . . . . . 48 - 01
Technical Data 968 / 968 CS . . . . . 48 - 03
Removing and installing ignition steering lock . . . . . 48 - 1
Replacing igniton switch . . . . . 48 - 5
Replacing lock barrel of igniton steering lock . . . . . 48 - 6

The following topics of Repair group 48 are described in the Repair Manual Type 944, vol. 3:

Power steering gear, removing and installing . . . . . 48 - 1
Power pump, removing and installing . . . . . 48 - 8
Checking hydraulic operation of the steering system (pressure measurement) . . . . . 48 - 13

Printed in Germany – XI, 1994

page

Body, general

Safety notes . . . . . 50 - 01
Checking dimensions for body repairs . . . . . 50 - 03
Checking dimensions for body repairs - Cabriolet . . . . . 50 - 09
Special Tools and Metalworking Repair Tools . . . . . 50 - 013

Body, Front

Replacing part of front end . . . . . 50 - 1

Body, Center

Replacing part of door sill with side member and floor pan . . . . . 51 - 1
Replacing complete roof . . . . . 51 - 7

Body, Rear

Replacing part of rear end . . . . . 53 - 1

Lids

Dismantling and assembling front cover . . . . . 55 - 1

Doors

Removing and fitting door outer handle . . . . . 57 - 1
Dismantling and assembling door outer handle . . . . . 57 - 7

Convertible top

Removing and installing convertible top . . . . . 61 - 1

Bumpers

Removing and fitting spoiler and bumpers . . . . . 63 - 1
Removing and fitting rear spoiler and bumper . . . . . 63 - 7

Glasses, window control

Bonding the interior rearview mirror in place . . . . . 64 - 1
Removing and installing windshield - 2-pack adhesive . . . . . 64 - 5
Removing and installing rear side window - 2-pack adhesive . . . . . 64 - 15

Printed in Germany – VIII, 1993

Exterior equipment

Body paint colors beginning with 1992 models . . . . . 66 - 01
Removing and installing plastic end and side applicates — Cabriolet . . . . . 66 - 1
Removing and installing tank flap — Cabriolet . . . . . 66 - 3
Removing and installing door mirror . . . . . 66 - 5
Removing and fitting side member panel . . . . . 66 - 9
Removing and fitting side member panel . . . . . 66 - 15
Removing and installing badge on cover . . . . . 66 - 19
Removing and installing wheel housing liner . . . . . 66 - 21

Interior equipment / Airbag

Inspecting seat belts . . . . . 68 - 1
Safety Precautions for Working on Cars with Airbag . . . . . 68 - 49
Replacing cover for passenger airbag . . . . . 68 - 51
Removing and installing Airbag Steering Wheel . . . . . 68 - 53
Removing and installing Airbag Components . . . . . 68 - 55
Checking Airbag System Operation . . . . . 68 - 61
Correct disposal of airbag units . . . . . 68 - 63
Repairing horn buttons on airbag steering wheel . . . . . 68 - 69

Seats

Checking seat heating . . . . . 72 - 1
Calibrating controllable seat heating . . . . . 72 - 3

Diagnosis airbag

Diagnosis / Troubleshooting Airbag . . . . . D 68 - 1

Printed in Germany – VIII, 1993

Torque specifications - Front axle

Location	Thread	Tightening torque Nm (ftlb)
Control arm to cross member	M 12 x 1,5	65 (48)
Control arm to body	M 10	46 (34)
Control arm mount to control arm (caster eccentric)	M 12 x 1,5	100 (74)
Control arm to steering knuckle	M 10	50 (37)
Cross member to body	M 12	85 (63)
Heat sink for hydraulic bearing to cross member	M 6	10 (7)
Track rod to steering knuckle	M 12 x 1,5	50 (37)
Stabilizer suspension to body	M 8	23 (17)
Clip for stabilizer to suspension	M 8	23 (17)
Stabilizer suspension to control arm	M 10	25 (18)
Mc Pherson strut bearing to shock absorber strut	M 14 x 1,5	77 (57)
Fillister head screw to damping nut	M 7	13 + 3 (10 + 2)
Cover plate to steering knuckle	M 7	10 (7)
Brake caliper to steering knuckle	M 12 x 1,5	85 (63)
Mc Pherson strut to steering knuckle	M 12 x 1,5	120 (74)

Printed in Germany – II, 1991

Location	Thread	Tightening torque Nm (ftlb)
Mc Pherson strut to body	M 8	25 (18)
Air deflector to Mc Pherson strut	M 6	10 (7)
Spoiler to control arm	M 6	10 (7)
Brake disk to wheel hub	M 6	10 (7)
Light-alloy wheel to brake disk	M 14 x 1,5	130 (96)

Printed in Germany – II, 1991

Technical Data 968 / 968 CS

Front axle	968	968 CS	968 / 968 CS with M 030 special running gear
Suspension	Mc Pherson independent suspension with light-alloy A-arms		
Suspension			
Length of removed coil spring	Coupé = 348 mm Cabriolet = 356 mm	324 mm	329 mm
Identification of coil spring (color lines)	Coupé = beige Cabriolet = grey	blue	white/yellow
Spring rate N/mm	28	28	28
Spring wire Ø mm	11.6	11.6	12.2...11.7
Outside Ø mm	106	106	124...110
Shock absorbers (twin-tube gas shocks)	F + S (not adjustable)	F + S (not adjustable)	Koni (rebound stage adjustable)
Stabilizer bar (tube-type stabilizer)	Ø 26.8 mm	Ø 26.8 mm	Ø 30 mm

Notes

The front and rear suspensions of the 968 CS are 20 mm lower than those of the 968 (shorter front-axle springs / modified spring brace adjustment at rear axle).

The 968 / 968 CS with M 030 special running gear is fitted with a front axle with height-adjustable spring struts. With the exception of the 968 U.S. version with M 030 equipment, the front and rear axles were also lowered by 20 mm over the standard 968.
The M 030 special running gear offers significantly tauter characteristics than the standard running gear.

The **968 CS** with M 030 special running gear is fitted with a limited slip differential with a locking ratio of 40% (normally supplied as M 220 special equipment).

For additional specifications, refer to pages 42 - 03 / 44 - 05 / 46 - 01 / 48 - 03.

Printed in Germany – XI, 1994

Adjusting the front wheel bearings

Wheel bearing clearance is adjusted correctly when the thrust washer may be moved by applying finger pressure using a screwdriver (but not by rotational or levering action).

1. Take off wheel. Lever off hub cap with two tire irons or Special Tool VW 637/2 (lever).

2. Remove pan head screw of clamping nut. Tighten clamping nut somewhat, rotating the hub at the same time.

3. Loosen clamping nut far enough to allow the thrust washer to be shifted barely with a screwdriver.
   When shifting the washer, do not use the hub as a support for the screwdriver.

4. Tighten pan head screw of clamping nut to 13 + 3 Nm (10 + 2 ftlb) without rotating the clamping nut.

5. Recheck adjustment by shifting the thrust washer, correct if required.

Printed in Germany – IV, 1992

Dismantling and assembling suspension

Tools

No.	Designation	Special tool	Order number	Explanation
–	Tie rod extractor			Commercially available, e.g. Nexus 168 - 1

Printed in Germany – V, 1992

Dismantling and assembling suspension

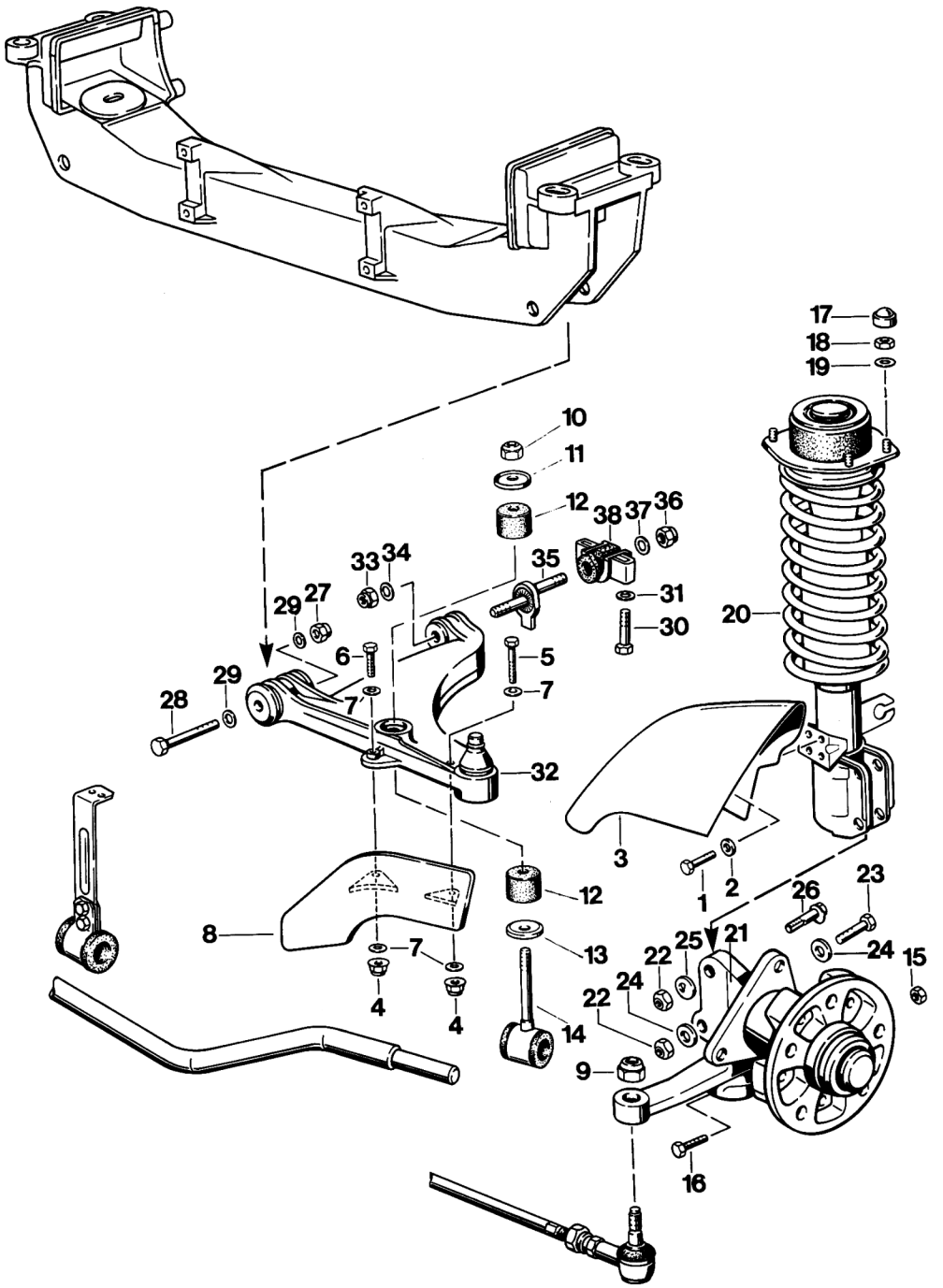

Printed in Germany – V, 1992

No.	Designation	Qty.	Note: Removal	Note: Installation
1	Hexagon head bolt M 6 x 20	2		Tighten to 10 Nm (7 ftlb)
2	Washer	2		
3	Cooling air duct	1		
4	Hexagon head bolt	2		Tighten to 10 Nm (7 ftlb)
5	Hexagon head bolt M 6 x 45	1		
6	Hexagon head bolt M 6 x 35	1		
7	Washer	4		
8	Cooling air duct	1		
9	Lock nut	1		Replace. Taper of ball joint and operating lever must be gree from grease. Tighten to 50 Nm (37 ftlb)
10	Lock nut	1		Replace. Tighten to 25 Nm (18 ftlb)
11	Cup washer	1		Identical to No. 13
12	Rubber mount	2		
13	Cup washer	1		Identical to No. 11
14	Stabilizer bar link	1		
15	Lock nut	1		Replace. Tighten to 50 Nm (37 ftlb)
16	Hexagon head bolt	1		Grease stem and threads with Optimoly HT. Coat stem of ball joint of axle strut with Tectyl (underbody wax)
17	Cap	4		
18	Hexagon head nut	4		Tighten to 25 Nm (18 ftlb)
19	Washer	4		

Printed in Germany – V, 1992

No.	Designation	Qty.	Note: Removal	Installation
20	Spring strut	1	To remove the strut, the steering knuckle and the subsequent parts (Nos. 22 to 26) do not have to be removed	
21	Steering knuckle	1		If the steering knuckle has been separated from the strut, the wheel alignment must be checked and/or corrected
22	Lock nut	2		Replace. Tighten to 120 Nm (88 ftlb)
23	Hexagon head bolt	1		Replace. Use only genuine bolt. Coat threads with Optimoly HT
24	Washer	2		Replace
25	Eccentric washer	1		
26	Eccentric bolt	1		Coat threads with Optimoly HT
27	Lock nut	1		Replace. Tighten to 65 Nm (48 ftlb)
28	Hexagon head bolt M 12	1		Coat threads and stem with Optimoly **TA**
29	Washer	2		
30	Hexagon head bolt M 10	2		Coat threads with Optimoly HT. Tighten to 46 Nm (34 ftlb)
31	Washer	2		

Printed in Germany – V, 1992

No.	Designation	Qty.	Note: Removal	Installation
32	A-arm	1		No welding or straightening is permissible on the A-arm. Coat stem of ball joint with Tectyl (underbody wax by Valvoline)
33	Lock nut	1	Undo only if A-arm or caster eccentric is to be replaced	Replace after removal. Tighten to 100 Nm (73 ftlb)
34	Washer	1		
35	Caster eccentric	1		Fit only new version (with serrations at A-arm end). Do not exceed specified caster setting. For caster adjustment, refer to page 44 - 9
36	Lock nut	1	Undo only if caster eccentric or rubber mount (No. 37) is to be replaced	Replace after removal. Tighten to 100 Nm (73 ftlb)
37	Washer	1		
38	Rubber mount	1		Replace if required

Printed in Germany – V, 1992

Dismantling and assembly notes

Dismantling

1. Remove front wheel.

2. Open combination plug at A-arm and pull out connector. Unclip wiring at spring strut.

3. Remove brake caliper from steering knuckle and suspend at a suitable location.

4. Remove brake cooling air duct from A-arm and spring strut.

5. Separate tie-rod ball joint from operating lever. Use a suitable separator, e.g. Nexus 168 - 1.

6. Undo stabilizer mount at stabilizer bar and A-arm.

7. Separate A-arm (ball joint) from steering knuckle (A). Undo strut at body. Remove strut and steering knuckle.

Note

Undo bolt unions (arrows) of strut and steering knuckle (camber adjustment) only if components are to be replaced.

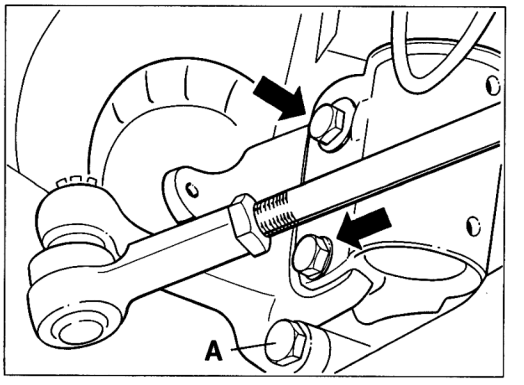

1108A - 40

8. When removing the A-arm, undo bolt union (A) – caster eccentric to A-arm mount or A-arm (caster adjustment) – only if the A-arm or A-arm mount is to be replaced.

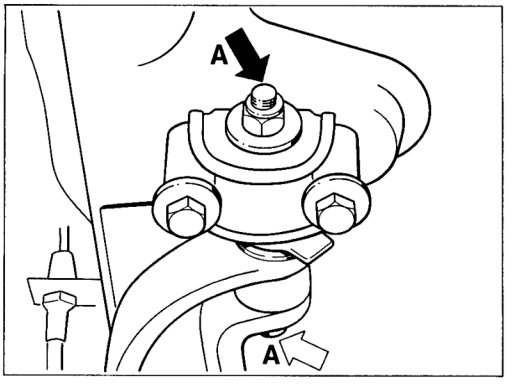

1107A - 40

Printed in Germany – V, 1992

Assembly

1. Assemble in reverse order.
   No welding or straightening is permissible on suspension components.
   Use specified assembly pastes. Observe correct tightening torques.

2. When carrying out assembly operations affecting ride level height or wheel adjustment settings, the suspension alignment must be checked.

Printed in Germany – V, 1992

Torque specifications - rear axle

Location	Thread	Tightening torque Nm (ftlb)
Bearing flange to transv. tube	M 10	46 (34)
Bearing flange to body	M 12 x 1,5	70 (52)
Thrust bearing to bearing flange	M 10	46 (34)
Thrust bearing to body	M 10	46 (34)
Support bearing to body	M 10	46 (34)
Support bearing to strut	M 8	23 (17)
Axle control arm to rear axle strut (locking nut camber eccentric)	M 12 x 1,5	90 (66)
Axle control arm to rear-axle strut (locking nut)	M 12 x 1,5	103 (76)
Axle control arm to transversale tube	M 12 x 1,5	61 (45)
Vibration damper to body	M 12 x 1,5	61 (45)
Vibration damper to trailing arm	M 14 x 1,5	123 (91)
Adjusting lever to spring sturt	M 16 x 1,5	245 (181)
Stabilizer suspension to rear axle strut an stabilizer	M 10	46 (34)
Stabilizer fastening clip to rear axle transversale tube	M 8	23 (17)
Wheel hub to rear-axle shaft	M 22 x 1,5	500 (369)

Printed in Germany – II, 1991

Location	Thread	Tightening torque Nm (ftlb)
Universal shaft to transmission and rear wheel shaft	M 8	42 (31)
Cover plate to axle control arm	M 6	10 (7)
Brake caliper to axle control arm	M 12 x 1,5	85 (63)
Brake line to brake caliper and brake hose	M 10 x 1	12 (9)
Mounting bracket for brake pipe to trailing arm	M 6	10 (7)
Cable holder to control arm	M 6	10 (7)
Brake disk to wheel hub	M 6	5 (4)
Light-alloy wheel hub	M 14 x 1,5	130 (96)

Printed in Germany – II, 1991

Technical Data 968 / 968 CS

Rear axle	968	968 CS	968 / 968 CS with M 030 special running gear
Suspension	Individual suspension with light-alloy semi-trailing arms		
Springs	One round transverse torsion bar per wheel		same as 968 / 968 CS To increase spring stiffness, each wheel is fitted with an additional coil spring (barrel spring) at the shock absorber.
Torsion bar Ø Aux. spring Ø (barrel spring)	25.5 mm —	25.5 mm —	25.5 mm 9.0 mm
Shock absorbers	F + S (not adjustable)	F + S (not adjustable)	Koni (rebound stage adjustable)
Stabilizer bar Ø	16 mm	16 mm	Tiptronic =18 mm Manual transmission =19 mm Manual transmission stabilizer bar has 3 settings Standard setting: Center pos.
Spring brace adjustment (Inclination of spring brace)	Refer to p. 44 - 03	Ref. to p. 44 - 03	Refer to page 44 - 03

Notes

The front and rear suspensions of the 968 CS are 20 mm lower than those of the 968 (shorter front-axle springs / modified spring brace adjustment at rear axle).

The 968 / 968 CS with M 030 special running gear is fitted with a front axle with height-adjustable spring struts. With the exception of the 968 U.S. version with M 030 equipment, the front and rear axles were also lowered by 20 mm over the standard 968.
The M 030 special running gear offers significantly tauter characteristics than the standard running gear.

The 968 CS with M 030 special running gear is fitted with a limited slip differential with a locking ratio of 40% (normally supplied as M 220 special equipment).

For additional specifications, refer to pages 40 - 03 / 44 - 05 / 46 - 01 / 48 - 03.

Printed in Germany – XI, 1994

Dismantling and assembling suspension

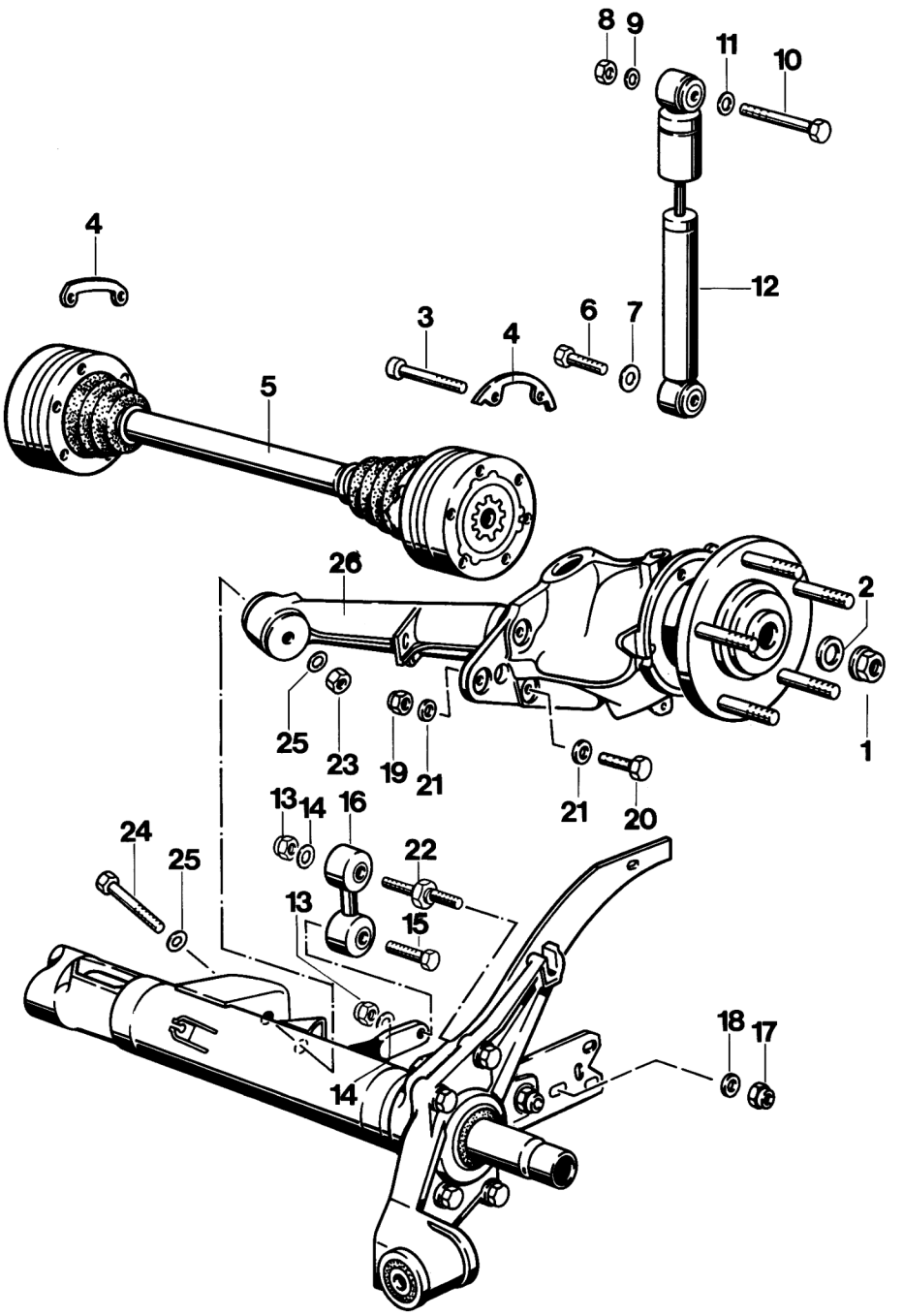

Printed in Germany – V, 1992

No	Designation	Qty.	Note: Removal	Installation
1	Lock nut	1	Undo only if rear-axle trailing arm, wheel bearing or wheel hub is to be replaced. Loosen nut before raising the vehicle. Actuate brakes when undoing the nut.	Replace after each removal. Coat threads with Optimoly HT. Tighten to 500 Nm (369 ftlb)
2	Washer	1		
3	Pan head screw	2 x 6		Tighten to 42 Nm (31 ftlb)
4	Support plate on transmission side on wheel side	 3 3		2 versions (transmission side and wheel side)
5	Drive shaft	1		
6	Hexagon head bolt	1	Raise trailing arm, e.g. with tensioning device VW 655/3 (to unload bolt)	Coat threads with Optimoly HT. Tighten to 123 Nm (91 ftlb)
7	Washer	1		
8	Hexagon head nut	1		Tighten to 61 Nm (45 ftlb)
9	Washer	1		
10	Hexagon head bolt	1		Coat threads and bolt stem with multipurpose grease.
11	Washer	1		
12	Vibration damper	1		
13	Lock nut	2		Tighten to 46 Nm (34 ftlb)
14	Washer	2		
15	Hexagon head bolt	1		
16	Stabilizer mount	1		
17	Lock nut	1		Replace, tighten to 90 Nm (66 ftlb)
18	Washer	1		

Printed in Germany – V, 1992

No.	Designation	Qty.	Note: Removal	Installation
19	Lock nut	2		Replace, tighten to 103 Nm (76 ftlb)
20	Hexagon head bolt	2		Check threads, replace bolt(s) if required.
21	Washer	4		
22	Camber eccentric	1		
23	Lock nut	1		Replace, tighten to 61 Nm (45 ftlb). Do not tighten to final specifications until the vehicle is back on its wheels
24	Hexagon head bolt	1		
25	Washer	2		
26	Trailing arm	1	Mark position of arm flange with regard to spring brace for reinstallation	No welding and straightening is permissible on the arm. Carry out suspension alignment.

Printed in Germany – V, 1992

Dismantling and assembly notes

Dismantling

1. If the trailing arm, the wheel bearing or the wheel hub is to be replaced, undo drive shaft nuts (M 18 lock nut on wheel hub) before raising the vehicle. Apply brakes at the same time.

2. Remove rear wheel.

3. Open combination plug at trailing arm and pull out connectors.
   Unclip or extend wire at trailing arm.

4. Disconnect brake pipe from brake hose at trailing arm and remove brake caliper. Before disconnecting the pipe, press down brake pedal with pedal retainer to keep brake fluid from flowing down from the reservoir.

5. Remove parking brake assembly from rear-axle trailing arm.

6. Undo pan head screws for constant velocity joint. If the drive shaft is undone on the wheel side or transmission side only, respectively, suspend drive shaft in horizontal position.

7. Undo shock absorbers at trailing arm. Remove stabilizer mount (arrow). Raise trailing arm somewhat for both assembly operations.

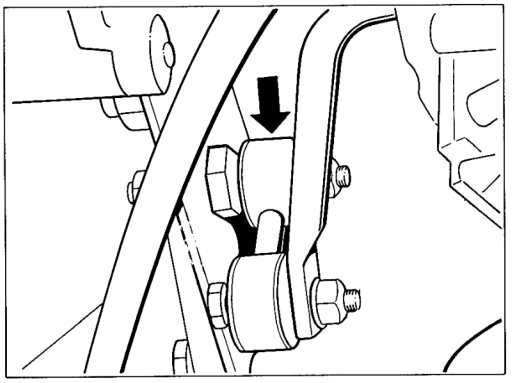

1105A-44

8. Undo spring brace/trailing arm union. Mark position of trailing arm before undoing the bolt union.

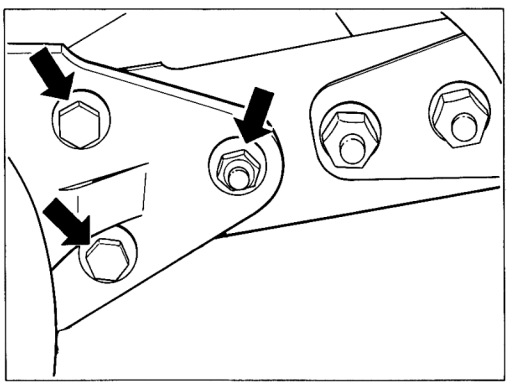

1104A-44

9. Separate trailing arm from rear-axle crosstube and remove trailing arm.

Printed in Germany – V, 1992

Assembly

1. Assemble in reverse order.
   No welding and straightening operations are permissible on suspension components.
   Use specified assembly pastes. Observe correct tightening torques.

2. Tighten trailing arm to rear-axle crosstube mounting bolt only when the vehicle is back on its wheels.

3. Adjust parking brake. Bleed rear brake circuit.

4. If assembly operations affecting the vehicle ride height have been performed, the suspension alignment (vehicle height and wheel alignment settings) must be adjusted as required.
   When replacing components or undoing bolt unions that affect the wheel alignment, check and/or adjust the wheel alignment.

Printed in Germany – V, 1992

Wheels and tires

Tire condition / tire pressure

Tires are safety-relevant items that are only capable of meeting the requirements aplicable if they are run at the correct tire pressure and with sufficient tread depth.

The tire pressures indicated are minimum pressures. The tires must never be run at lower pressures since this influences roadholding in a negative manner and may lead to severe tire damage.

Valve caps protect the valve against dust and dirt and therefore help prevent leaks. Always screw on caps tightly and replace missing caps.

For safety reasons, do not limit tire checks to checking the tire pressure but also check for sufficient tread depth, ingress of foreign matter, pinholes, cuts, tears and bulges in the sidewalls (cord break)!

Tire pressure for cold tires (approx. 20° C) (16" and 17" summer and winter tires)

Up to end of MY '89

front	2.5 bar excess pressure
rear	2.5 bar excess pressure

Folding spare tire

front and rear	2.5 bar excess pressure

Tire and wheel survey / tire specification identification mark

The tire and wheel survey for summer and winter tires is to be found in the corresponding Technical Information (TI) Group 4.

When replacing summer tires, pay attention to the tire specification character. The specification character serves to distinguish summer tires specifically approved by Porsche from other versions of the same tire type and size. The approved tires are also listed in the corresponding Technical Information. N0, N1 and N2 tires must not be mixed when mounted on one single vehicle, even if they are of the same make.

Printed in Germany – II, 1991

Fitting 16" and 17" cup design wheels to the vehicle

In the case of the 16" and 17" cup design wheels, the valve (No. 1) and the locking wheel nut cannot be arranged on the same side (as on previous models).

For correct installation, the valve (No. 1) must face the color-coded stud (No. 2). Be sure to fit the locking wheel nut* to the color-coded stud (No. 2).

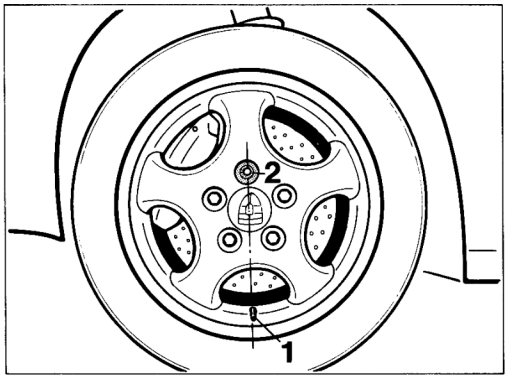

583-44

If required, mark the wheel stud located opposite the valve before removing the wheel.

For stationary balancing of the wheels (with step rings), turn the wheel in such a manner that the valve points to the bottom. Tighten the wheel in this position.
After balancing, mount the wheel to the vehicle in an identical position (valve faces to the bottom / color-coded wheel stud and locking wheel nut* located on top).

Important note

Fitting (and tightening) procedures **of all other wheel types (16-inch Design 90 etc.)** for stationary balancing **remain unchanged.**

This means: Coded stud, valve and locking wheel nut* are located on the same side. When tightening, valve must point up (same position as on balancing equipment).

* Observe wheel mounting introduced from MY '94. (p. 44 - 04).

Printed in Germany – XI, 1994

Wheel mounting as of MY '94

A new security wheel nut is fitted for additional theft protection. This security wheel nut features a coding system that will only allow the corresponding socket bit* to be inserted.

As the weight of the security wheel nut and of the wheel nuts is virtually identical, it would normally be possible to fit the security wheel nut in any position desired.

To make sure that the same nut position is obtained when the wheel is refitted to the wheel hub or brake disc, the fitting procedure applicable to locking wheel nuts (refer to page 44 - 03) must also be observed for the new security wheel nuts.
This is required to preserve the optimum balancing results obtained by finish balancing.

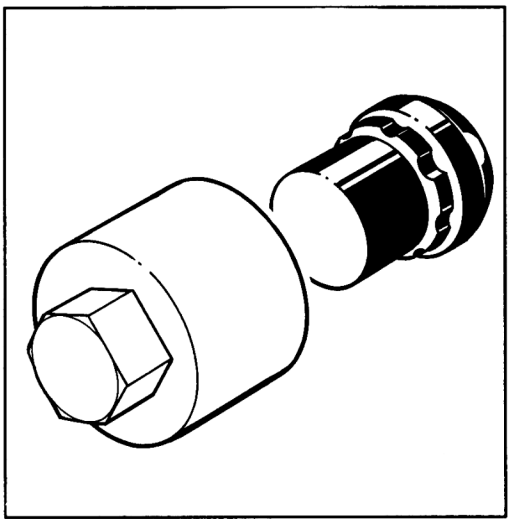

* Porsche does not supply the Special Tools. For additional information, refer to the Porsche circulars, Service No. 15/93 or 13/93 (Export).

Printed in Germany – XI, 1994

Wheels and tires of the 968 CS

968 CS wheels

Wheels painted in body color. For black body color, wheels are painted silver.

Wheel mounting nuts without theft protection (apart from exceptions indicated*).

Front axle:

7 1/2 J x 17 in., wheel offset 65
with 225 / 45 ZR 17 tires

Rear axle:

9 J x 17 in., wheel offset 55
with 255 / 40 ZR 17 tires

* Observe country-specific usage details

Printed in Germany – XI, 1994

Sample measuring chart

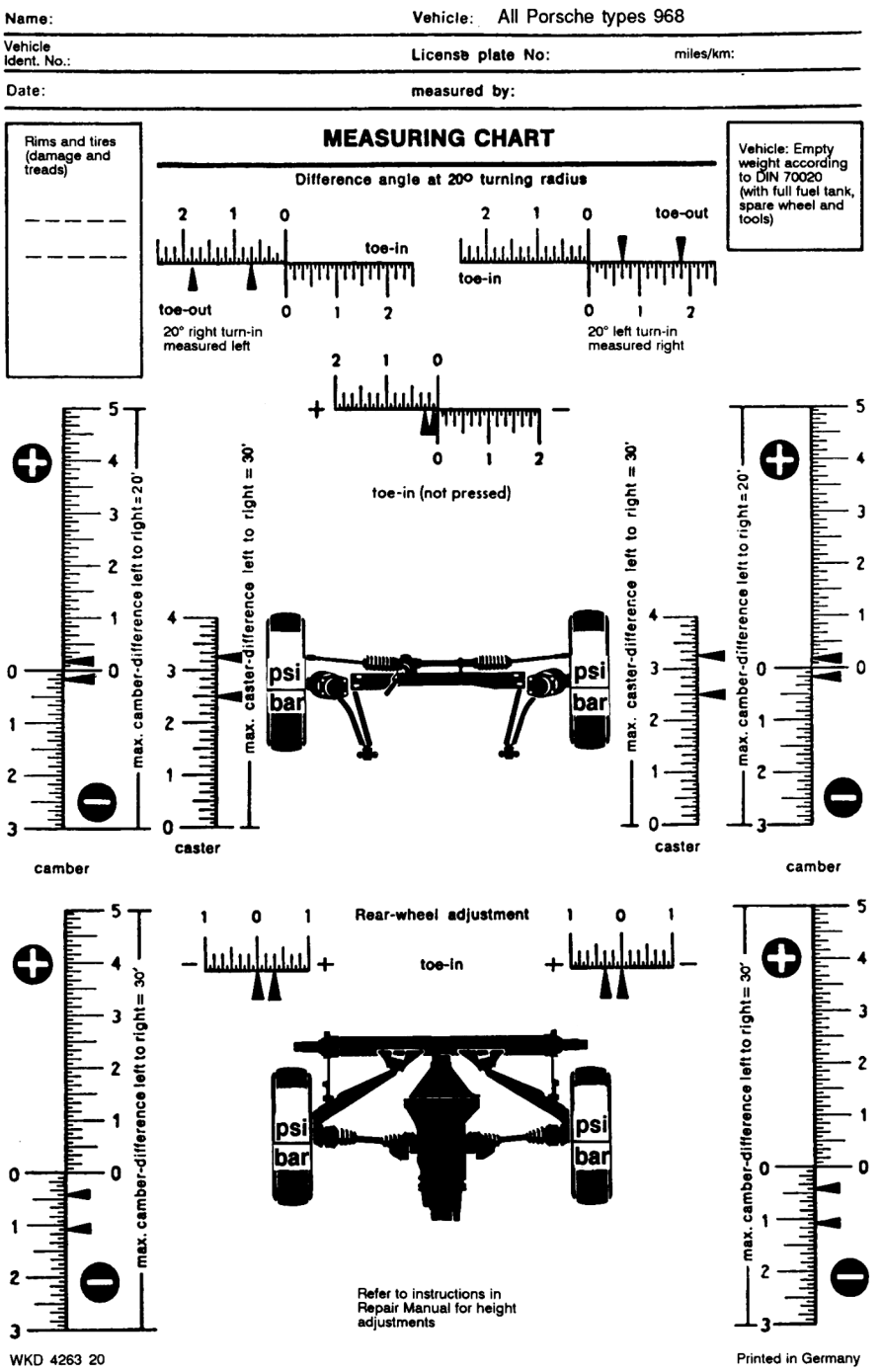

Adjustment values for wheel alignment

The following values are valid for the vehicle curb weight to DIN 70020 (vehicle tank full, with spare wheel and tools).
Adjustment values for U.S. and Canadian models are given in brackets.

Wheel alignment values

	Adjustment value and tolerance	max. difference left to right
Front axle		
Toe - unpressed	+ 10' ± 5'	
Toe difference angle at 20° steering lock	- 40' to - 1° 50'	correction only possible by replacing the steering arms
Camber	0° ± 10'	20'
Caster	3°15' + 0 − 45'	30'
Rear axle		
Toe (each wheel)	+ 10' ± 10'	10'
Camber	− 45' ± 20'	30'

Printed in Germany – II, 1991

Ride height and spring brace settings

Front axle

	Height setting * Bottom bolt edge of rear trailing arm mount **below** wheel center (p. 44-7)
Production running gear (strut height not adjustable)	
Row	130 ± 10 mm***
USa	127 ± 10 mm***
All 968 CS except M 030	147 ± 10 mm***
Sport-type running gear M 030 (height-adjustable spring struts)	
RoW including all 968 CS M 030	147 ± 10 mm
USA	127 ± 10 mm

Rear axle

		Spring brace setting (Spring brace inclination)**	Height setting * Center of brace mount (torsion bar center) **below** wheel center
ALL 968 CS		14°	– 37 ± 10 mm
ALL 968 CS M 030		9°	– 37 ± 10 mm
RoW Coupé	Manual transmission	18°	–17 ± 10 mm
	Tiptronic	18.5°	–17 ± 10 mm
RoW Cabriolet	Manual transmission	18.5°	–17 ± 10 mm
	Tiptronic	20.5°	–17 ± 10 mm
USA Coupé	Manual transmission	18.5°	–17 ± 10 mm
	Tiptronic	18.5°	–17 ± 10 mm
USA Cabriolet	Manual transmission	19.5°	–17 ± 10 mm
	Tiptronic	20.5°	–17 ± 10 mm
RoW M 030	Manual transmission	10°	–37 ± 10 mm
M 030	Tiptronic	11°	–37 ± 10 mm
USA M 030	Manual transmission	14°	–17 ± 10 mm
M 030	Tiptronic	15°	–17 ± 10 mm

* max. ride height difference left to right: 10 mm.
On U.S. vehicles, the bumper height is used as a reference (refer to page 44-4). The distance from the measuring surface (road surface or any level surface) to the measuring point must be 543 ± 20 mm at the **rear axle. At the front axle,** the distance must be 611 ± 20 mm.
For measuring points, refer to page 44-4.

** **max. difference right to left: 0.5°.**

*** Checking dimension. Height cannot be adjusted.

Body – Measuring points for U.S. vehicles

For settings, refer to page 44-3

Front measuring point:

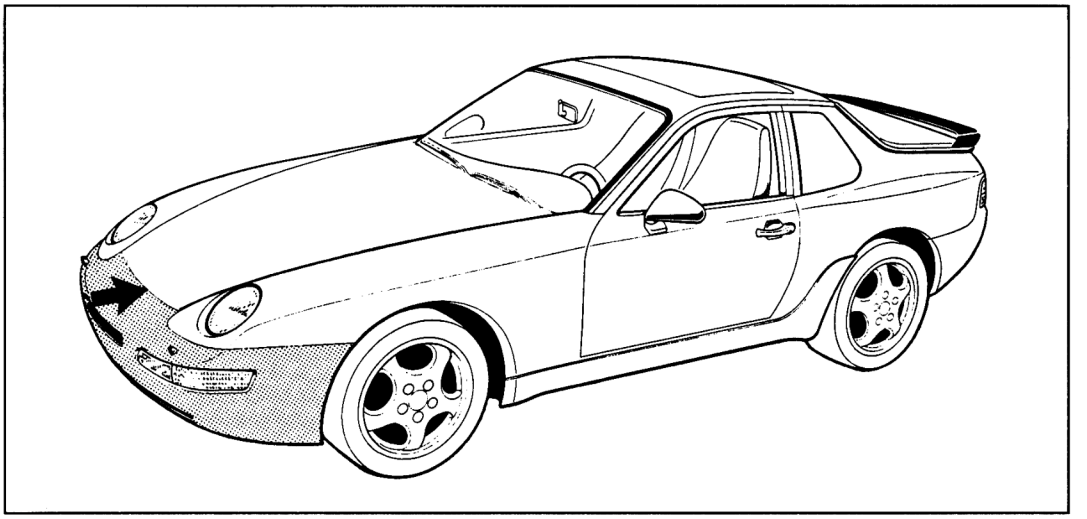

Rear measuring point:

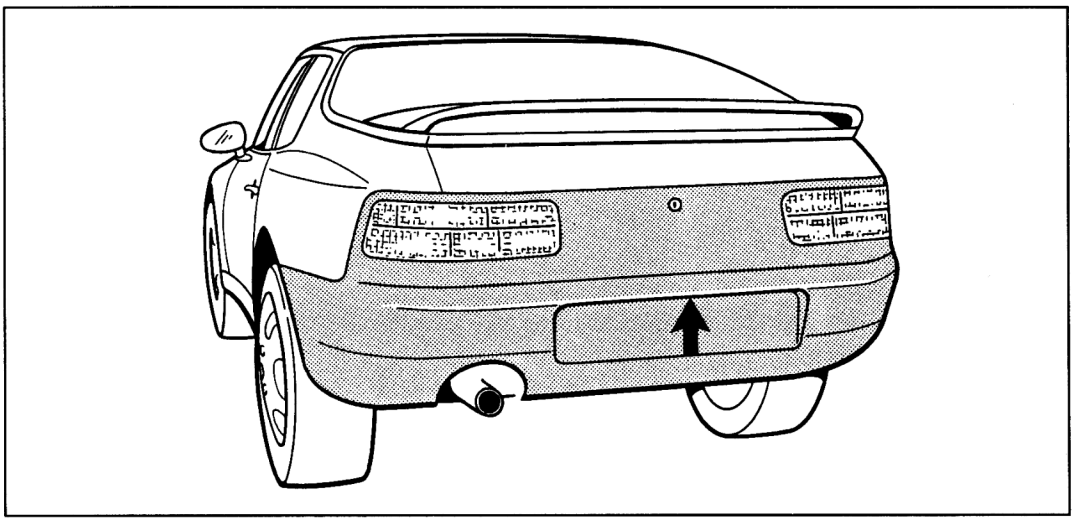

Printed in Germany – IV, 1992

Suspension alignment

General

Use optical or electronic wheel alignment equipment to check the suspension alignment. For measuring operations, refer to the operating instructions of the equipment manufacturer. The following requirements must be met prior to the wheel alignment procedure:

- Vehicle curb weight acc. to DIN 70020, i.e. vehicle in roadworthy condition with full fuel tank and spare wheel
- Axle joints and wheel bearing play o.k.
- Tire pressure to specification, virtually uniform tread depth on all tires

If the front and rear of the car are measured, **start by checking and adjusting (if required) the wheel settings of the rear axle.** Set steering wheel and steering gear to center position when adjusting toe-in.

Before adjusting the wheel settings of the front and rear axles, it is *recommended* (or required *) to check the height settings of the rear axle as well as, in the case of vehicles with height adjustable front struts, of the front axle at DIN curb weight.

If wheel load scales are available, the height adjustment feature may be used to reduce the wheel load difference between the left-hand and right-hand sides to the minimum possible. The wheel load difference is adjusted by modifying the vehicle ride height within the height tolerance. Try to achieve a left-to-right wheel load difference that is as small as possible.

* if operations affecting the ride height have been carried out or if it is evident that the ride height is incorrect

Printed in Germany – IV, 1992

Important information for suspension alignment

Observe the following when carrying out suspension alignment

Ride height adjustment/wheel load change

Changing the height on one side causes the wheel load to be changed at the same time. *If the wheel load is changed on one wheel, the wheel loads are also changed on the other wheels.*

Increasing the built-in spring preload on one side (raising the vehicle) causes the wheel load to be increased.

Reducing the built-in spring preload on one side (lowering the vehicle) causes the wheel load to be reduced.

A change of the wheel load affects the diagonally opposite side of the other axle side. I.e. if the wheel load is reduced or increased on one side, the diagonally opposite wheel is affected in the same way.

Example

Rear left spring preload C is increased.

This causes the wheel load :

– to be increased at LH rear C and RH front B

– to be reduced at RH rear D and LH front A

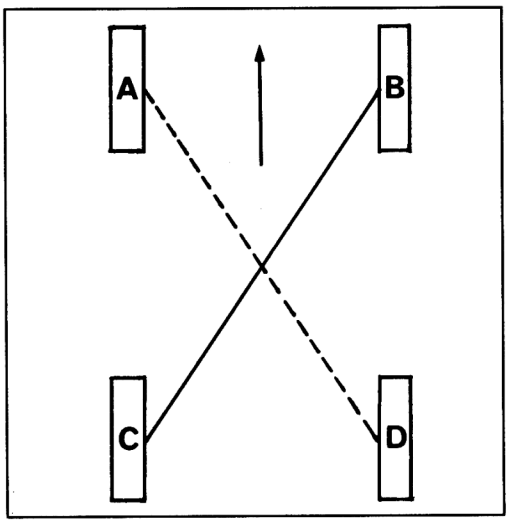

The left-to-right wheel load difference at the front and rear axles should be as small as possible (below 20 kgs, if possible).

Printed in Germany – IV, 1992

Ride height check / ride height adjustment

Drive vehicle onto measuring stand and check height adjustment at rear axle or at front and rear axle (if vehicle is equipped with height-adjustable front axle) and correct if required.

Rear axle

Both the torsion bar center and wheel center measuring points are measured taking the tire contact area as a reference.

Setting: P. 44 - 3

If required, correct rear vehicle ride height at two-part spring brace with eccentric screw B after having undone mounting screw A.

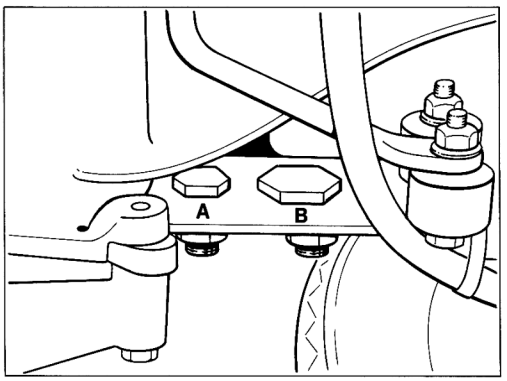

1110-44

Front axle

Non-adjustable spring struts

The front-axle ride height is determined by the coil springs and cannot be adjusted.

Adjustable spring struts

Both the wheel center and bolt bottom edge measuring points are measured taking the tire contact area as a reference.
Setting: P. 44-3.

Example *

(Ride height adjustment on one wheel)

measure to wheel center a = 300 mm
specified height E = 147 ± 10 mm

Value (from tire contact area to measuring point) = 153 ± 10 mm

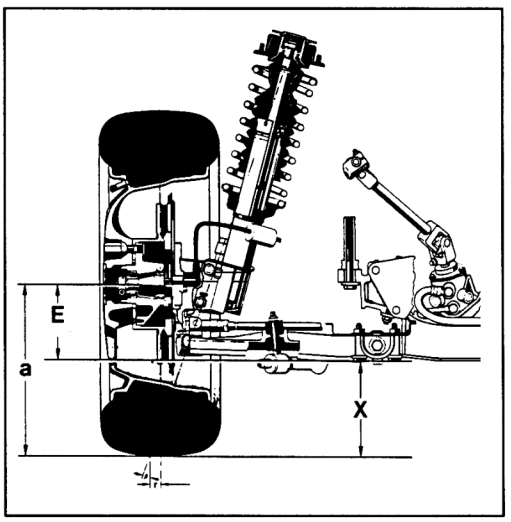

69/44

If required, correct height (p.44-8).

* In case of U.S. vehicles, the bumper height is used to determine the ride height. For settings, refer to p. 44-3.

For height adjustment, undo lock nut and turn spring cup accordingly.
Use suitable hook wrench or Special Tool VW 637/2 (lever).

Turning the adjusting nut
– to the right - vehicle height is increased
– to the left - vehicle height is reduced

Note

If no wheel load balances are used to adjust the ride height, make sure the RH and LH coil springs have the same installation length (pre-load/dimension X).
Tolerance ± 1 mm. The wheel load difference will then be within an admissible range.

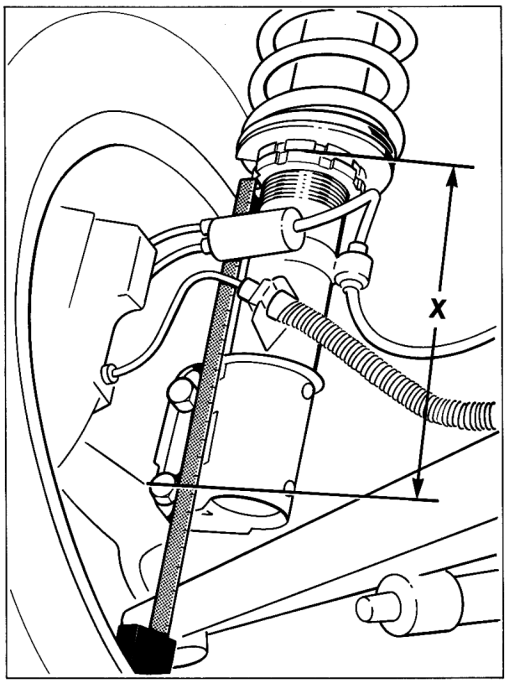

1109-44

Wheel alignment

Rear axle

Adjusting camber

Undo stabilizer mounts and nut and bolt unions between spring brace and trailing arm and adjust to specified setting by turning the camber eccentric.

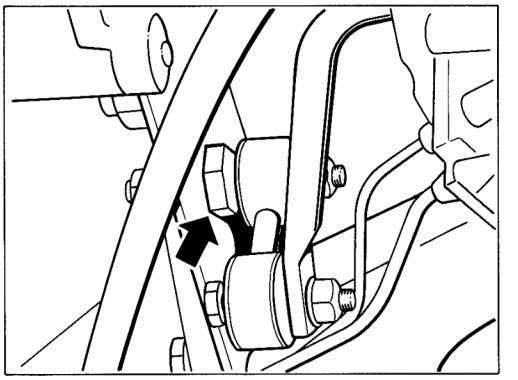

1105-44

Adjusting toe-in

To adjust toe-in, move trailing arm in the slots of the spring brace, using Special Tool 9171.

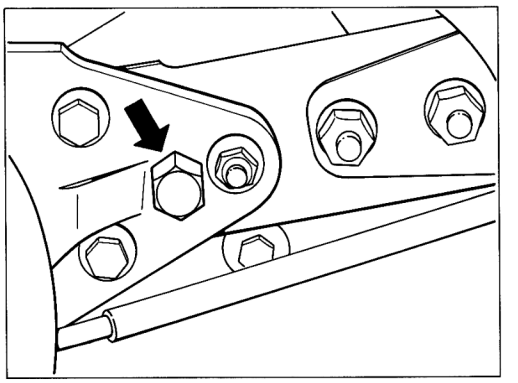

1104-44

Front axle

Adjusting camber

To adjust the camber, turn the eccentric screw (arrow).
To do so, unscrew the air duct for brake cooling so that the eccentric screw and the clamping screw become accessible.

Note

When adjusting the camber on the M 030 sport-type running gear, make sure the brake pipe is not damaged (bent).

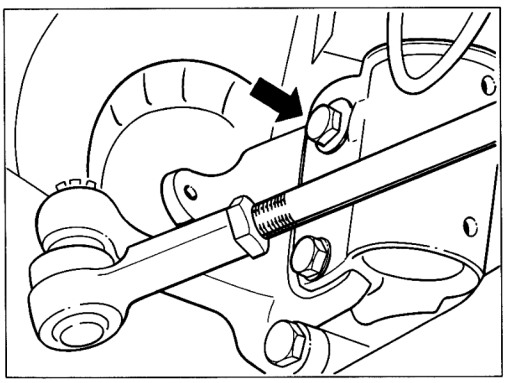

1108-44

Adjusting caster

Remove undertray paneling.

Undo self-locking nuts A at caster eccentric.

Adjust to specified value by turning the caster eccentric.
Depending on the position of the eccentric, use a 19 or 32 mm (area C) open-ended wrench.

Observe tightening torque of hexagon head nuts A.

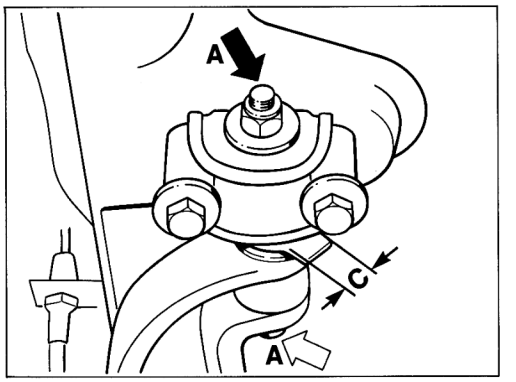

1107-44

Adjusting toe-in

Preliminary operations: Center out steering gear using Special Tool 9116. If the steering wheel is offset, try to achieve an optimum position when relocating the steering wheel. Then remove Special Tool 9116.

Clamp steering wheel in center position and adjust toe-in at tie rods.

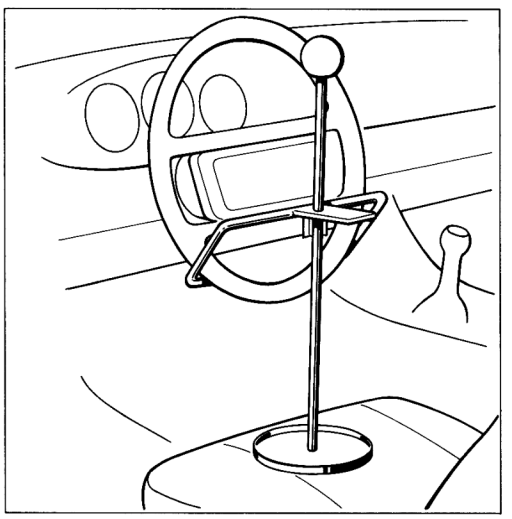

1106-44

Toe difference angle

The toe difference angle cannot be adjusted (it can only be acted upon by replacing the steering arms).

Tire fitting

The following assembly and dismantling procedures refer to the 17-inch Cup Design wheels with asymmetric hump.

Notes / tools

- Avoid damaging the wheel paintwork.
- To remove / fit a tire, a tie-down tool – Special Tool 9539 – is required. In addition, the tire lever should be flattened along its front face and should then be rounded (arrow).

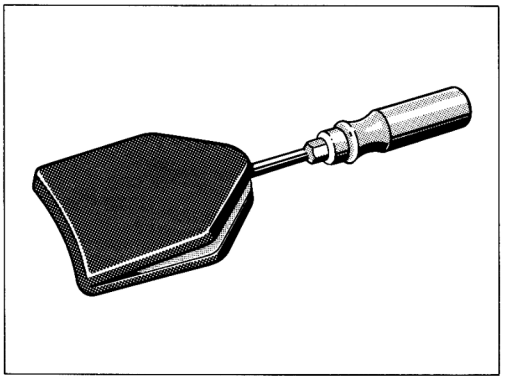

1012 - 44

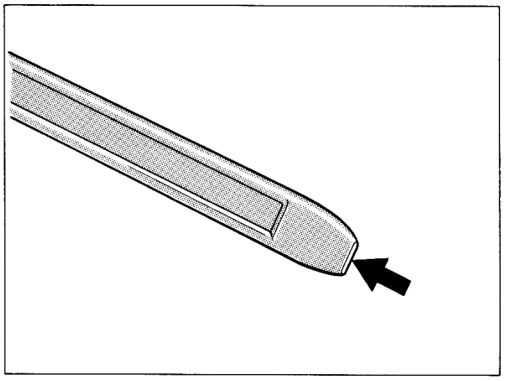

1013 - 44

Tire assembly

- Fit wheel to assembly stand and coat inside of wheel and both tire beads with tire assembly compound.
  Replace the valve whenever a tire is fitted or refitted.
- Set assembly tool to correct clearance.

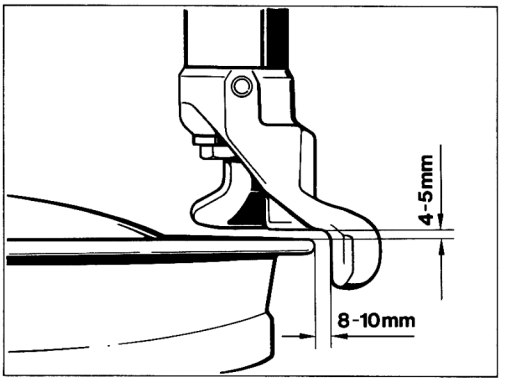

1014 - 44

- Fit first tire bead in the usual manner.

Note

The asymmetric hump changes its cross-section across the circumference.
The following points must therefore be observed when fitting or removing a tire.

Printed in Germany – IV, 1992

- When starting to fit the **second bead,** the assembly arm should be located **opposite the valve.** Then place the second bead as flat as possible onto the wheel, guide it across the assembly head and tie it down with Special Tool 9539, keeping it offset by approx. 90 to 120 deg.

  While performing the turning motion and fitting the **second bead,** use a second tire lever and Special Tool 9539 to locate the tire bead in the drop center.

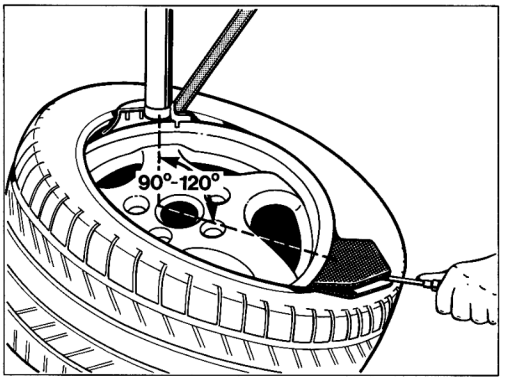

1015 - 44

- To facilitate assembly, position the additional tire lever below the hump.

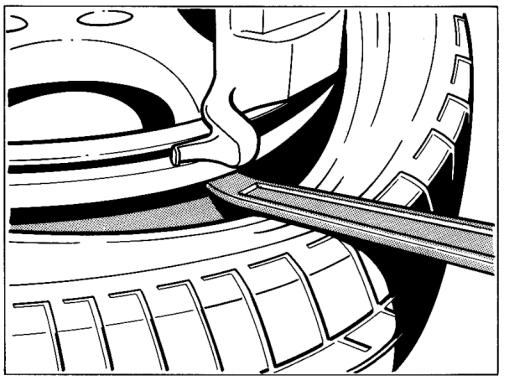

1016 - 44

- **When inflating the tire, the beads must jump over the hump at a positive pressure of 4.5 bar at the latest.**
  The bead still located in the drop center must therefore be positioned **opposite the valve (flatter hump section)** when the tire is pumped up. If required, rotate the tire accordingly and coat with assembly compound again.

Removing the tire

- Adjust assembly head as for tire fitting (Fig. 1014 - 44).

- **When pressing off the tire, start at the valve since the levering force required in this area is somewhat lower.**
  Then press off the tire on both sides, coating the rim flange with assembly compound.

Printed in Germany – IV, 1992

- **Lift the first side of the tire** over the assembly head (Fig. 1017 - 44). Place a rag or a leather cloth between the wheel and the tire lever.
  In addition, make sure the tire remains in the drop center opposite the disassembly head (Fig. 1018 - 44). Use Special Tool 9539 to facilitate this.

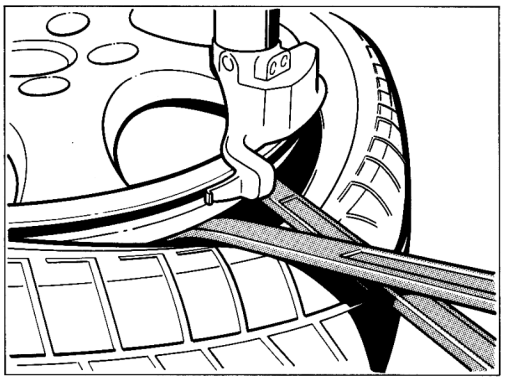

1017-44

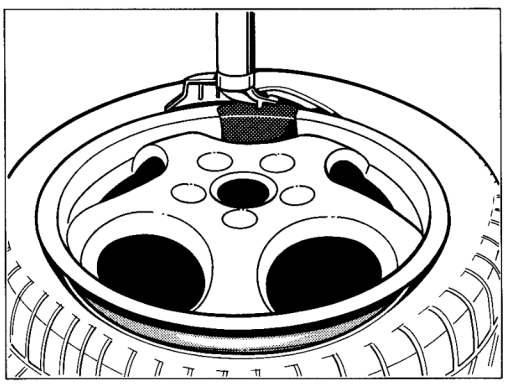

1018-44

- **Remove the second side of the tire** in the usual manner.

Printed in Germany – IV, 1992

Technical Data 968 / 968 CS

Designation	Remarks, dimensions	Wear limit
Operating brakes (foot brake)	Hydraulic dual-circuit brake system with front/rear axle circuit division (black/white), brake booster, vented brake discs with fixed caliper on front and rear axle. The pushrod brake circuit is allocated to the front wheels. 4 pistons per each fixed caliper.	
Brake booster (light weight built)	Ø 9 inch	
Boost coefficient	3.4	
Brake master cylinder*** (aluminum design) Ø in mm	23.81/20.64	
Brake power regulator in rear axle circuit switchover pressure/ reduction coefficient	18 bar/046	
Brake discs Ø front	298 mm (304 mm)*	
rear	299 mm	
Effective brake disc dia. front	245 mm (250,8 mm)*	
rear	246 mm	

* The values in brackets are valid for the 968 / 968 CS models with M 030 special running gear. The brake disc used for the M 030 special running gear are **drilled**. The same applies to the rear brakes. The rear brake dimensions are identical to those of the standard brake system.

Printed in Germany – XI, 1994

Designation	Remarks, dimensions	Wear limit
Piston dia. in brake caliper front, mm	2 x 36 + 2 x 40 (2 x 36 + 2 x 44)*	
rear, mm	2 x 28 + 2 x 30	
Brake pad thickness front	13 mm	2 mm
rear	13 mm	2 mm
Brake pad area (each front wheel	86 cm^2 (126 cm^2)*	
Brake pad area (each rear wheel)	86 cm^2	
Total brake pad area	344 cm^2 (424 cm^2)*	
Brake pad thickness, new front	28 mm (32 mm)*	
rear	24 mm	
Min. brake disc thickness** after refacing front	26.6 mm (30.6 mm)*	26 mm (30 mm)*
rear	22.6 mm	22 mm
Tolerance of thickness of brake disc max.	0.02 mm	
Lateral runout of brake disc max.	0.05 mm	
Lateral runout of fitted brake disc max.	0.1 mm	
Lateral runout of wheel hub max.	0.05 mm	
Surface roughness of brake disc after machining max.	0.006 mm	

* The values in brackets are valid for the 968/968 CS models with M 030 special running gear.

** The brake disc may only be machined symmetrically, i.e. in a uniform manner on both sides

Printed in Germany – XI, 1994

Designation	Remarks, dimensions	Wear limit	
Play at brake pedal with brakes bled and engine standing still	approx. 10 mm		
Parking brake (hand brake)	Drum brake, with mechanical action on both rear wheels		
Parking brake drum dia.	180 mm	181 mm	
Brake shoe width	25 mm		
Brake lining area (each wheel)	85 cm^2		
Brake lining thickness	4.5 mm	2 mm	

Torque specifications - mechanical brake system

Location	Thread	Tightening torque Nm (ftlb)
Fillister head screw to clamping nut	M 7	13 + 3 (10 + 2)
Brake caliper to steering knuckle	M 12 x 1,5	85 (63)
Brake disk to front wheel hub	M 6	10 (7)
Cover plate to steering knuckle	M 7	10 (7)
Air deflector to spring strut	M 6	10 (7)
Spoiler to front-axle trailing arm	M 6	10 (7)
Wheel hub to rear wheel shaft	M 22 x 1,5	500 (369)
Mounting bracket for brake pipe to rear-axle trailing arm	M 6	10 (7)
Cable holder to control arm	M 6	10 (7)
Cover plate to brake carrier or control arm	M 6	10 (7)
Brake disk to rear wheel hub	M 6	5 (4)
Brake caliper to control arm	M 12 x 1,5	85 (63)
Handbrake lever to body	M 8	21 (15)
Brake cable to yoke	M 6	8,5 (6)
Handbrake cable to turnbuckle	M 6	8,5 (6)
Brake booster to intermediate piece	M 8	21 (15)
Intermediate piece to bulkhead	M 8	21 (15)
Fork head to brake push rod	M 10	35 (26)
Speed sensor to steering knuckle and rear-axle trailing arm	M 6	10 (7)

Printed in Germany – II, 1991

Checking Thickness of Brake Pads

Note

All brake pads on one axle must be replaced when the brake pad wear warning lamp comes on or, at the latest, if a residual pad thickness of 2 mm is reached.

If the warning lamp indicates worn brake pads, the warning contact (sender incl. electric lead and plug) must also be replaced. Replacement of the warning contact can be prevented if the brake pads are replaced at the latest when they are worn to a thickness of 2.5 mm. If the electric lead of the warning contact has rubbed off to expose the bare core, the warning contacts must be replaced. Replacement is not necessary, however, if rubbing traces are limited to the plastic part of the warning contact.

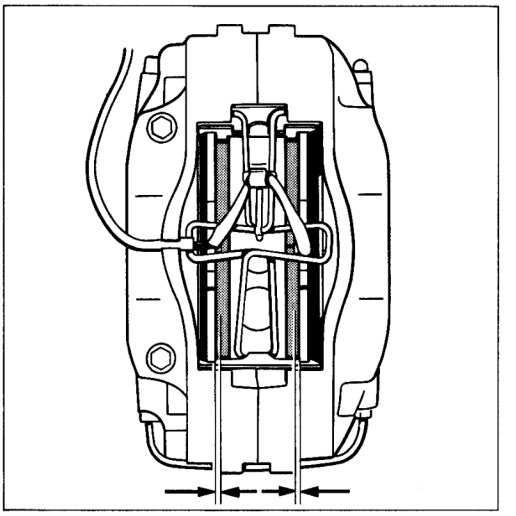

578-46

1. To check the rear brake pads, remove the **rear wheels***.
   The front brake pads may be checked without removing the wheels.

2. Check brake pads visually for wear.

Wear limit has been reached when a pad is worn to a residual thickness of 2 mm.

* Note instructions on page 44 - 03 (fitting of Cup Design wheels)

Printed in Germany – II, 1991

Removing and installing brake pads

Note

The brake pads are changed in the usual manner known from other Porsche models fitted with four-piston fixed calipers. This is why only a short description of the operations is given. Please make sure the following is observed at all times:

- **use correct brake pad quality (refer to spare parts catalog).**

- **Replace damping plates or vibration dampers with new parts whenever the brake pads are changed.**

- The damping plates and vibration dampers are protected by an adhesive sheet. **Pull off this protective sheet before fitting the pads.**

- **Do not grease the pad backing plates (rear of brake pads).**

Removal

- Compress spreader spring in the middle and disengage from its mounting. **At the same time, i.e. before starting to compress it, press spreader spring towards brake disc in the retainer plate area (to take the load off the spring).** This prevents damage to the retainer plate.

- Extend warning contact lead at brake caliper and pull warning contact out of the brake pad plate.

Note

Replace warning contacts if the lead has been ground through to the bare wire. If grinding marks are limited to the plastic section of the warning contact, the warning contact may continue to be used.

- Pull out brake pads using a brake pad slide hammer puller, **absolutely** observing the following points:

  Expand brake pads complete with damping plates or vibration dampers, respectively. If this is not possible (depending on the degree of wear of the brake pads), use a spatula to separate the damping plates / vibration dampers from the brake backing plate prior to removal of the pads. Push back brake pads as far as possible in both cases, using the piston retracting tool. If required, start by drawing off some brake fluid from the reservoir.

Installation

- If required, use piston retracting tool to push piston back into home position.

- Clean seating and guiding surface of the brake pads inside the caliper with some white spirits and a cylinder brush or special brush. **Make sure the dust seals of the brake pistons are not damaged.**

Printed in Germany – IV, 1992

- Insert **new damping plates or vibration dampers, respectively,** into the pistons. Since the damping plates and vibration dampers are protected by an adhesive sheet, this **protective sheet** must be pulled off before the pads are fitted.

- Fit brake pads. **Be sure to use the correct pad quality.**

Note

The brake backing plates (back of brake pads) must not be greased. To prevent the brake pads from corroding in the brake caliper, apply a thin grease coat to the seating and guide surfaces.
Use Optimoly HT (Cu paste) or Plastilube (supplied by Messrs. Schillings, P.O. Box 1703, D-7080 Aalen) for this purpose.

- Grease mounting eyelets of the spreader spring with Optimoly **TA** or Plastilube.

If required, fit a new spreader spring, making sure the flat side points towards the brake disc.
Make sure the spreader spring engages correctly (arrow). Do not force the spring into position as this may cause the retainer plate to be damaged.

Brake disc

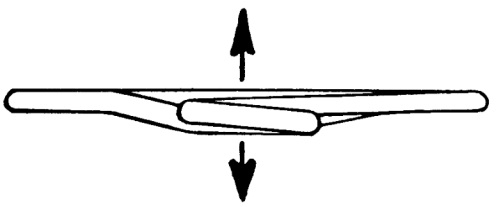

Outside

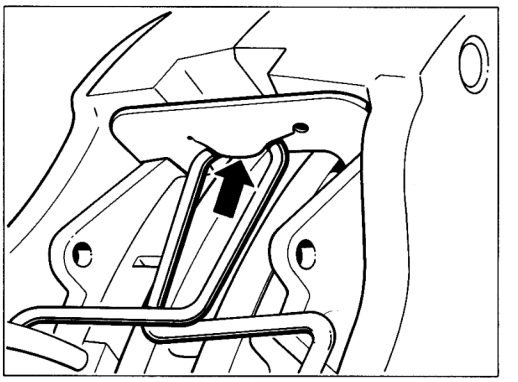

1102-46

- Fit warning contact lead and warning contact. The spreader spring may have to be disengaged once again to allow the warning contact lead to be fitted.

- Actuate the brake pedal several times forcefully with the vehicle stationary to allow the brake pads to move to their normal operating position.
Then check brake fluid level and top up if required.

Running in the brake pads

New brake pads require a running-in period of approx. 200 kms (120 miles). It is only after this mileage that they reach optimum friction and deceleration values. Except for emergency situations, avoid hard braking from high speeds during this time.

Printed in Germany – IV, 1992

Adjusting the brake pushrod

Note

Adjustment of the brake pushrod is only required in the following cases:

- when the brake booster is replaced
- if the clevis of the brake pushrod has been removed
- if the pushrod or the clevis has been rotated.

The brake pedal does not have a stop. As there is no resting position for the brake pedal if the brake pushrod is adjusted correctly, the correct built-in free play in the brake booster is provided for. If the brake pedal is actuated manually a pushrod play of **approx. 10 mm may be felt** at the pedal plate of the brake pedal.

Readjusting the pushrod at the joint clevis causes the position of the brake pedal to be changed. The adjustment of the stop light switch must then be checked as well.

Adjusting

1. Adjust length of brake pushrod by turning the clevis. The length (dimension a) must be 207 + 1 mm when measured from the contact surface of the booster on the spacer (mounting flange) to the center of the clevis pin.

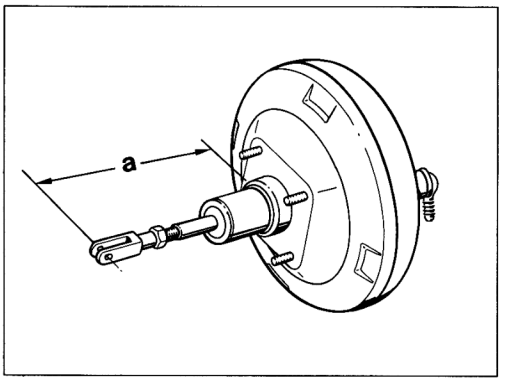

1103-46

2. Tighten lock nut.

3. Check adjustment of stop light switch again (refer to page 46-6).

Printed in Germany – IV, 1992

Checking stop light switch adjustment

A mechanically operated stop light switch fitted to a bracket above the brake pedal plate is used.

With the brake pedal in home position (pedal not depressed), the distance from the stop light switch to the brake pedal must be **5 mm**. If required, change position of the stop light switch by turning the mounting nuts until the specified **5 mm** are reached. Lock mounting nuts against each other.

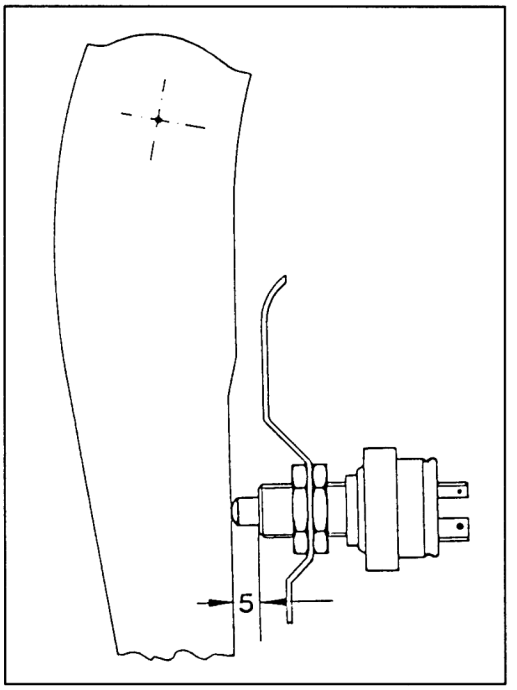

Printed in Germany – IV, 1992

Checking and adjusting the parking brake

Checking the free travel of the parking brake lever

The parking brake is fitted with asbestos-free brake pads. As a rule, a parking brake fitted with asbestos-free pads must never be adjusted in such a manner that the pads must "grind themselves free" during operation.

If the parking brake lever can be pulled up more than 4 notches at average operating force without braking action being noticeable the parking brake must be readjusted.

Adjusting the parking brake

1. Remove rear wheels.

2. Release parking brake and push back rear disc brake pads until the brake disc can rotate freely.

3. If required, undo adjusting nut at the tension jack of the parking brake lever until the tension is released from the cable.

4. Engage a screwdriver across the bore in the brake disc to reset the adjuster until the wheel cannot be rotated anymore. Then turn back the adjuster until the wheel turns freely again, and follow this by turning back (loosening) the adjuster by 2 more notches. Repeat adjustment process on the other wheel.

5. Tighten parking brake lever by 2 notches and turn adjusting nut on the tension jack until both wheels can hardly be rotated manually anymore.

6. Release parking brake lever and check if both wheels now rotate freely.

7. Lock adjusting nut at tension jack.

Printed in Germany – IV, 1992

Checking brake disc lateral runout

1. Measuring requirements: No tilt play present at wheel. If required, adjust wheel bearing clearance of front wheels.

2. Fit adapter plate (Special Tool 9510/1) **to wheel hub**. Tightening torque of wheel nuts (mounting nuts): 130 Nm (96 ftlb).

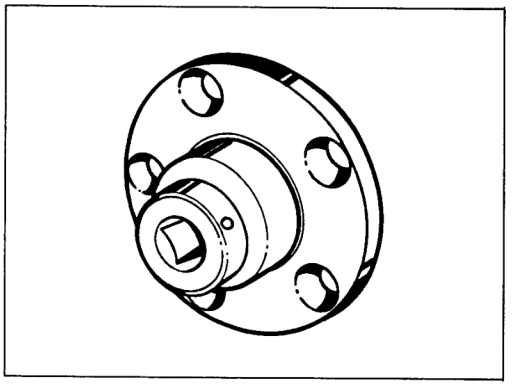

1035 - 46

3. Engage dial gauge holder, e.g. Ate Part No. 03.9314-5500.3/01, into brake caliper, determine center position and fit by turning the wing screw.
   If the brake disc cannot rotate freely, bush back brake pads slightly.
   Take care not to damage the tab for the spreader spring on the retainer plate of the four-piston fixed calipers when fitting the dial gauge holder.

Note

If required, fit dial gauge holder with Ate conversion kit, Part No. 03.9314-5510.3/01 (longer wing screw and bracket for dial gauge if required).

4. Fit dial gauge with a slight preload. Place measuring pointer on maximum diameter of braking surface.

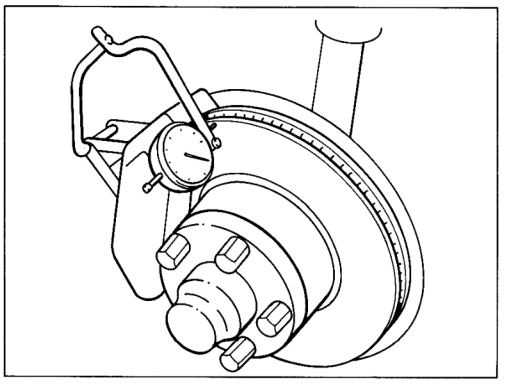

1036 - 46

5. Rotate brake disc and read off runout on dial gauge.
   Max. permissible lateral runout of fitted brake disc **max. 0.1 mm.**

Note

Lateral runout of removed brake disc : max. 0.05 mm.
Lateral runout of wheel hub : max. 0.05 mm.

Printed in Germany – IV, 1992

6. If the brake disc runout exceeds 0,1 mm, remove the brake disc and check lateral runout of the wheel hub. Mark position of disc with regard to wheel hub.

7. Check wheel hub runout as follows:
   Measure once outside (arrow) and once within wheel stud area of hub face. Lift off dial gauge carefully in cutout area of hub.
   To fit the dial gauge, use either a magnetic universal dial gauge holder or the dial gauge holder VW 387.

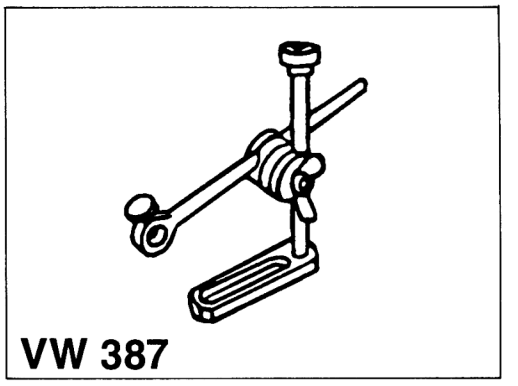

1039 - 46

Note

Make sure the brake hoses and brake pipes are not damaged when the brake caliper is removed and installed.

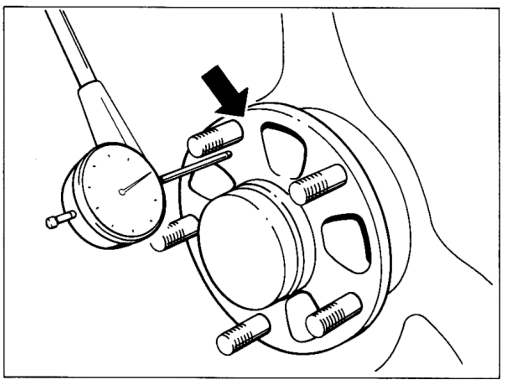

1038 - 46

8. **Excessive lateral runout of wheel hub:**
   Replace wheel hub.
   Lateral runout of wheel hub o.k.:
   Clean leveling and centering surfaces of brake disc and wheel hub. Then coat centering surfaces of wheel hub with a thin coat of Optimoly TA.
   Fit brake disc to wheel hub in another position, offset radially with regard to wheel hub.
   Repeat measurements with fitted adapter plate - Special Tool 9510/1.
   If the lateral runout is still in excess of 0.1 mm, the brake pad must be replaced.

Note

If the brake disc runout has been reduced by offsetting the brake disc radially with regard to the wheel hub, one 6 mm screw may be omitted if two 6 mm countersunk screws had been fitted.

Printed in Germany – IV, 1992

Checking brake disc thickness

Measure brake disc thickness in approx. 8 places within the braking surface using a micrometer.

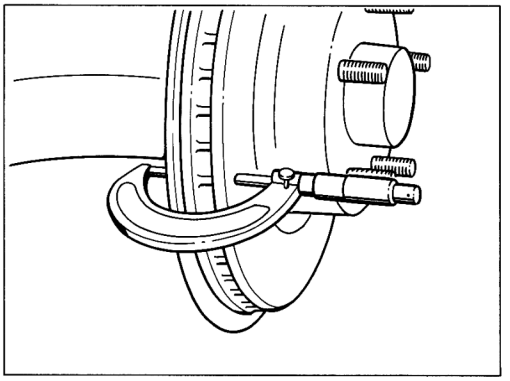

1040 - 46

Printed in Germany – IV, 1992

Torque specifications - hydraulic brake system

Location	Thread	Tightening torque Nm (ftlb)
Brake pressure line to brake master cylinder, hydraulic unit, brake hose, distributor and brake caliper	M 10 x 1	12 (9)
Brake power regulator to brake master cylinder or hydraulic unit	M 10 x 1	14 (10)
Brake hose to brake caliper	M 10 x 1	14 (10)
Bleed screw to fixed caliper	M 10	8-12 (6-9)
Brake master cylinder to brake booster	M 8	21 (15)
Brake booster to intermediate piece	M 8	21 (15)
Intermediate piece to bulkhead	M 8	21 (15)
Mounting bracket to rear-axle trailing arm	M 6	10 (7)

Printed in Germany – II, 1991

Changing the brake fluid / bleeding the brakes

Important Notes

Use only new DOT brake fluid. **Observe change intervals and brake fluid grade.** Total brake fluid quantity for fluid change: **approx. 1 liter.**

On vehicles up to MY '92, the brake fluid must be replaced **every 2 years** as a minimum.

As of MY '93, the brake fluid change interval has been increased to **3 years** - along with the use of special DOT 4 brake fluid.

The 3-year change interval is valid as of MY '93, but only in conjunction with the use of the special Porsche brake fluid. The brake fluid is available under Part No. 000.043.202.04.
Container contents: 5 liters (as of May, 1992).

This special brake fluid may also be used on pre-MY '93 vehicles. However, the **two-year** fluid change interval will remain valid for those vehicles.

Brake fluid

The new brake fluid - Part No. 000.043.202.04 - offers superior properties. Compared to the brake fluid specified previously, its main features are **further reduction of water absorption and increased wet and dry boiling points.**
Notes on water absorption: Water contents of only 2 % in the brake fluid will cause the boiling point to drop by approx. 60°C.

As of MY '93, only the new brake fluid must be used when topping up the reservoir. Any mixture of former brake fluid with the new brake fluid causes the safety margin of the fluid to be narrowed down unnecessarily. Both the former and the new brake fluid are of amber color.

Sequence of operation for bleeding and brake fluid change

- Fill reservoir with new brake fluid up to the upper edge. **Connect bleeding device to expansion tank.**
  Turn bleeding device on. Bleeding pressure approx. 1,5 bar.

- Continue bleeding or changing the brake fluid, respectively, on the other brake calipers (no special sequence to be observed).
  Open each bleeder valve until clear brake fluid or until the corresponding brake fluid change quantity per caliper (approx. 250 cm^3) is reached. note that each four-piston fixed caliper must be bled at both bleeder valves.

Printed in Germany – V, 1992

- To check that escaping brake fluid is clean and free from air bubbles, and to determine the brake fluid quantity used, use a suitable receiver bottle.

- After fitting a new brake master cylinder, depress brake pedal fully several times with the bleeder valves open during the bleeding operation. This allows trapped air to escape from the brake master cylinder.

- When changing the brake fluid, also drain some brake fluid from the clutch slave cylinder.

- **Turn off and disconnect bleeding device.**
  If required, top up with fresh brake fluid.

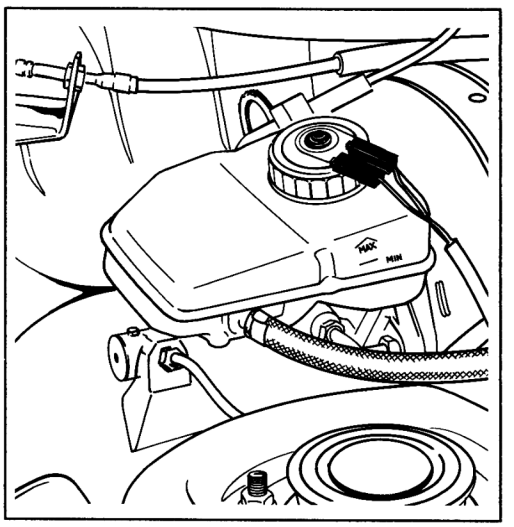

BA-03

Printed in Germany – V, 1992

Torque specifications - steering

Location	Thread	Tightening torque NM (ftlb)
Universal shaft to steering gear and steering shaft	M 8	30 + 5 (22 + 4)
Steering gear to cross member	M 8	23 (17)
Cover for pinion bearing	M 6	7 (5)
Cover on press. piece bearing	M 6	7 (5)
Track rod to steering rack (not for power steering)	M 12 x 1,5	50 (37)
Steering wheel to steering shaft	M 16 x 1,5	45 (33)
Steering column switch to jacket tube	M 8 M 5	15 (11) 4 (3)
Jacket tube to body	M 8	23 (17)
Support bearing to body	M 6	7 (5)
Track rod to steering rack	M 14 x 1,5	70 (52)
Track rod to joint to track rod	M 14 x 1,5	70 (52)
Pressure and return line to steering gear Left-hand drive Right-hand drive	M 12 x 1,5 M 10 x 1	20 (15) 15 (11)
Pressure line to servo pump	M 14 x 1,5	30 (22)
Ring hose nipple for suction hose to servo pump	M 16 x 1,5	45 (33)

Printed in Germany – II, 1991

Technical Data 968 / 968 CS

Steering		Rack-and-pinion steeering with hydraulic assist (power steering).
Steering wheel dia.	968	380 mm Ø 4-spoke leather-trimmed steering wheel with airbag
	968 CS	360 mm Ø 3-spoke leather-trimmed steering wheel without airbag
Steering wheel ratio		18.85 : 1 (left-hand drive) 18.96 : 1 (right-hand drive)
Turning circle		10.75 m
Steering wheel turns from lock to lock		3.24

Printed in Germany – XI, 1994

Removing and installing ignition steering lock

Removal

1. Disconnect battery.

2. Remove steering wheel. Observe safety precautions for airbag vehicles (Repair Group 68). For removal and installation of airbag steering wheel, refer to page 68 - 53.

3. Remove shrouding of airbag contact unit or steering column switch.

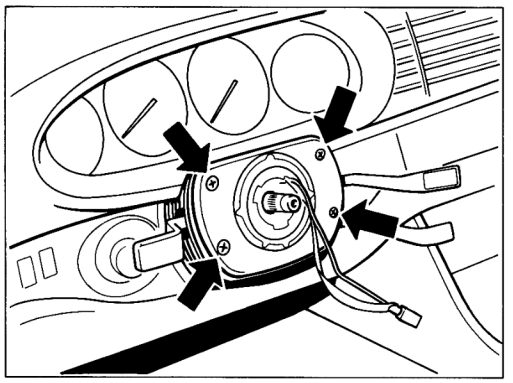

1022-68

4. Remove airbag contact unit, disconnecting the plug and undoing the fastening screws.

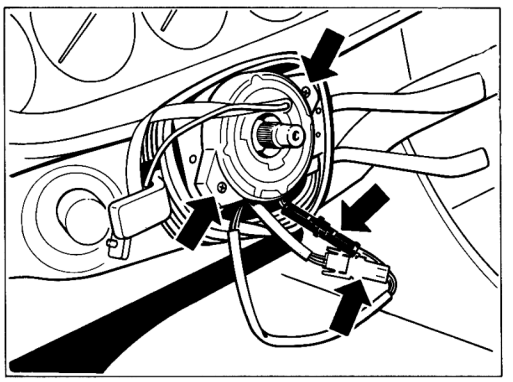

1023-68

5. Remove steering column switch. Take off switch cover and steering lock shroud.

6. On vehicles with Keylock, remove the bowden cable for the steering lock.
Before removing the cable, turn ignition key to "II" position (ignition on).
Then remove bowden cable from ignition steering lock (arrow) (screw connection).

Note

The ignition steering lock must remain in the "II" position. If it is in any other position, the ignition steering lock and the Keylock bowden cable are damaged.

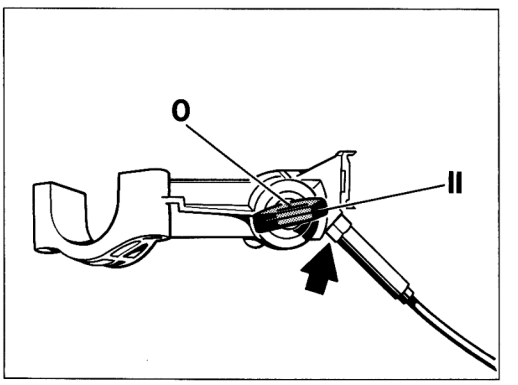

1283-48

Printed in Germany – VII, 1992

7. Disconnect instrument cluster plug (to improve accessibility), connector of ignition switch and buzzer contact switch.

8. Drill out shear bolts of steering lock housing. Take out steering lock housing.

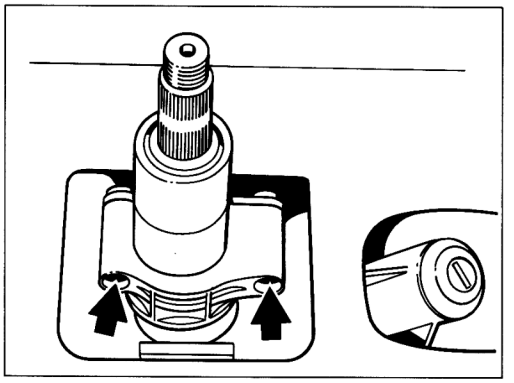

1284-48

Replacing lock barrel

Refer to page 48-6

Replacing ignition switch

Refer to page 48-5

Installation

1. Insert ignition steering lock with lock pin disengaged into vehicle - steering lock position "II".

2. Align steering lock housing, pin of steering lock must engage easily. Tighten shear bolts, taking care not to shear the bolts.

3. For Keylock vehicles, screw in bowden cable at ignition steering lock position "II" (selector lever must **not** be in position "P"). **Then** move selector lever to position "P" and turn ignition steering lock to position "0".

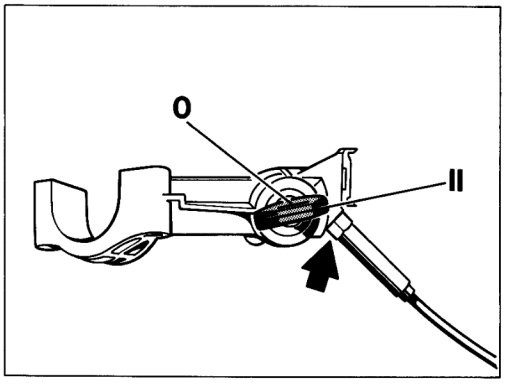

1283-48

Printed in Germany – VII, 1992

Note

If the ignition steering lock cannot be turned to the "0" position, the cable adjustment must be corrected as follows:

Set selector lever to position "P".
Turn ignition steering lock to position "II" and then turn back to position "0" again.
Adjust bowden cable, turning the bowden cable at the slide housing (No. 1) until distance (A) between the notch at the locking slide (No. 2) and the mark edge at the gate (No. 3) is 6 mm.
When turning the cable, use a second wrench to lock at the square of the slide housing (No. 4).

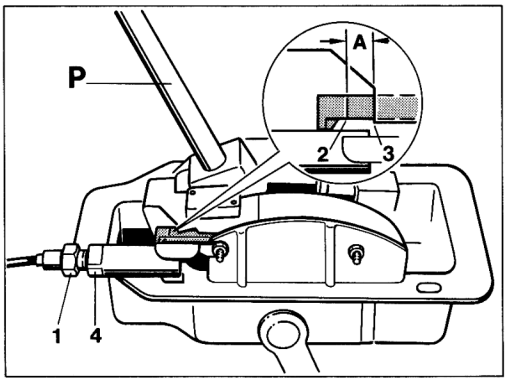

1281-37

4. Fit connectors of ignition steering lock, instrument cluster and buzzer contact.

5. Check ignition steering lock operation (operation of lock pin) and Keylock operation (page 37-205).

6. Fit steering column switch.

7. Align steering column stalk as follows:

Vehicles without airbag

Fit steering wheel provisionally. Adjust clearance between
steering column switch and steering wheel.
Specification = 2 – 4 mm.
Tighten steering column switch screw.

Vehicles with airbag

Using a depth gauge, set dimension
45 ± 0.5 mm. Tighten steering column switch.
Measure between beginning of steering shaft and center of steering column switch.

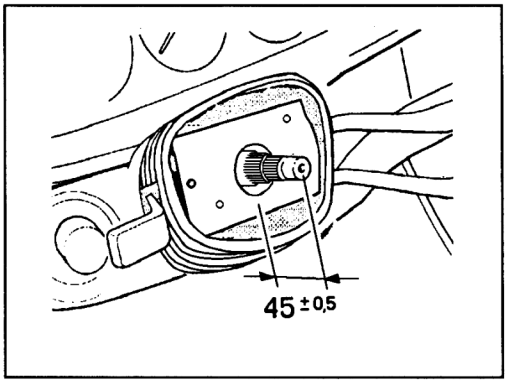

1289-48

Printed in Germany – VII, 1992

8. Fit airbag contact unit. Use two new screws.

Note

Before fitting the contact unit, set the front wheels to the straight-ahead position and set the contact unit to the center position (approx. 4 1/2 turns from left-hand or right-hand full lock). The precise center position is indicated by the two arrows.

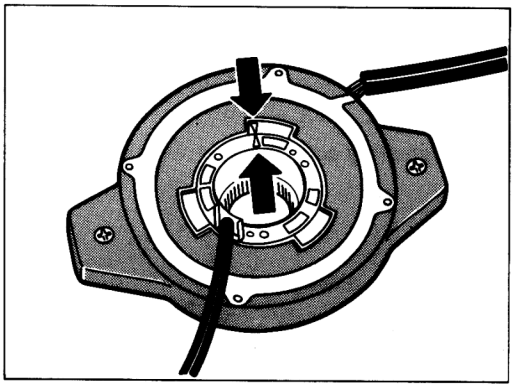

280-68

A new contact unit is locked in the center position. The lock is only removed after fitting the contact unit.

9. Shear off the shear bolts after all visual and functional checks of the relevant parts have been carried out.

10. Fit covers and trim panels.

11. Fit steering wheel. For airbag steering wheel, refer to page 68-53.

Printed in Germany – VII, 1992

Replacing ignition switch

Requirements for Keylock – vehicles:

- When removing and installing the ignition switch, the lock barrel must be fitted to the steering lock housing.
- The Keylock bowden cable may remain fitted.

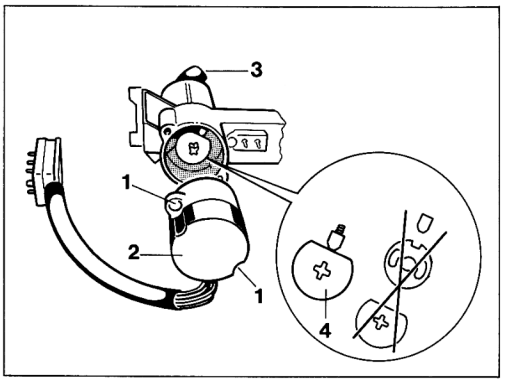

1286-48

Replacing ignition switch

1. Pull connector off ignition switch.
   Unclip connector housing from steering column housing.

2. Turn ignition key (No. 3) to position "0" (key can be pulled off).
   Turn out fastening screws (No. 1) of ignition key (No. 2). Extend ignition key **carefully**.

Caution
In case of Keylock vehicles, the steering lock housing must under no circumstances point in a downward direction when the ignition switch is removed or installed, respectively.
Also make sure the ignition key remains in the "0" position. If this precaution is not observed, the Keylock control mechanism (No. 4) may come apart.

3. Retract the ignition switch carefully and tighten the switch,
   keeping lock barrel and ignition switch in the "0" position (key may be pulled off).

Note

On initial versions of the ignition switches, the wiring is located **above** the steering lock housing.
When replacing the switch (with modified ignition switch version), route the wiring **below** the steering lock housing (Fig. 1288-48).

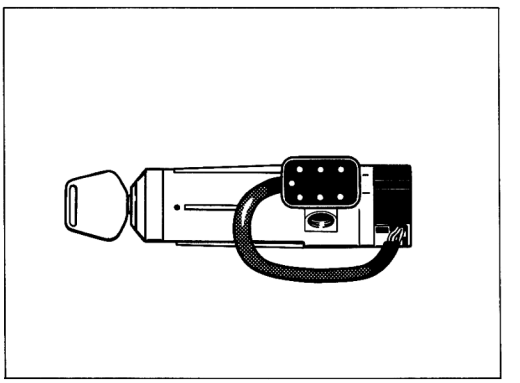

1288-48

Printed in Germany – VII, 1992

Replacing lock barrel of ignition steering lock

Requirements for Keylock vehicles:

- Keylock cable is **not** fitted.
- When removing and installing the lock barrel, the ignition switch must be fitted to the steering lock housing.

Replacing lock barrel

1. Screw stud for lock barrel out of steering lock housing.

2. Drill steering lock housing with 3 mm dia. drill acc. to figure.

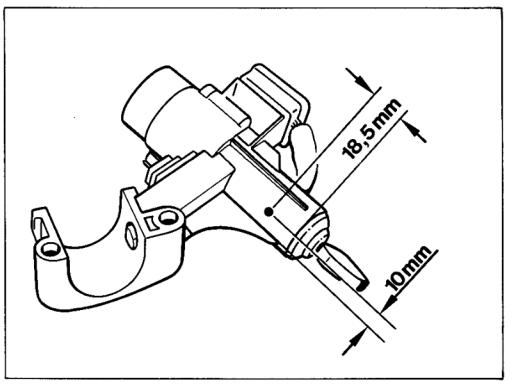

1285-48

3. Using a scriber or a similar tool, disengage the lock barrel across the 3 mm bore and pull it out.

Note

For Keylock vehicles, observe the following:
Ignition key in "0" position.
To keep the lock pin in the unlock position, make sure ignition key has not been pulled off.
If required, preload lock pin (No. 1 / Fig. 1287-48) lightly when pulling out the lock barrel.

4. **Before fitting the lock barrel,** use a screwdriver
to place the ignition switch in the "0" position (ignition key may be pulled off).

5. Insert and engage the lock barrel (No. 3) with the control cam extended (No. 2 / ignition key position 0).
Lock pin (No. 1) must be pushed back slightly (preloaded).
If a key from another 968 car is available, use this key for that purpose.
If the matching key is used, there is a risk of the control cam (No. 2) turning with regard to the lock barrel (No. 3).

Printed in Germany – VII, 1992

Note

If the lock barrel does not engage in the case of Keylock vehicles, also relocate the Keylock control mechanism via the threaded hole for the bowden cable.

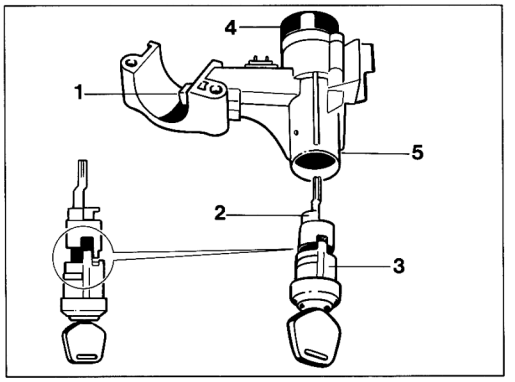

1287-48

1 = Lock pin 2 = Control cam

3 = Lock barrel 4 = Ignition switch

5 = Threaded hole for stud

6. Tighten the stud after the lock barrel has engaged in the housing. Upset nut threads slightly.

7. Fit Keylock cable and adjust if required (refer to page 48-3).

Printed in Germany – VII, 1992

Safety notes

Observe the following safety notes when performing body repairs:

- Removal of components may change the gravity center of the vehicle.
  The vehicle may therefore have to be tied down by additional measures on the lifting platform.
- Rooms designated for body repairs may not be used to stock other vehicles without protection (risk of fire damage due to sparks, battery, paint and body glass damage).
- Be extremely careful when grinding or welding in the vicinity of the fuel tank and other parts of the fuel system. If necessary, remove any components affected.
- Do not weld, braze or solder any parts of the filled air conditioning system. This also applies to welding, brazing or soldering operations on the vehicle that may result in the risk of components of the air conditioning system warming up.
- When drying the vehicle following a respray, do not expose the vehicle to temperatures of max. 80°C for more than 2 hours.

To protect electronic control units against excessive voltage when using electric welding equipment, observe the following safety measures:

- Disconnect clamp from negative battery terminal and cover negative battery terminal.
- Connect ground clamp of the electric welding equipment directly and as closely as possible to the component to be welded. Make sure no electrically insulated parts are located between the ground clamp and the welding location.
- Do not touch electronic control units and electric lines with the ground clamp or with the welding electrode.

Safety precautions for **operations involving open flames or spark generation** (welding, grinding) in the vicinity of the **battery** or near the location of the **battery vent hose:**

- Remove battery and store it in a safe place.
- Blow through vent hose using compressed air. Plug hose ends. (The vent hose is routed into the right water reservoir affluent behind battery)

Printed in Germany – V, 1992

Treatment of electronic control units following accident repairs

Following an accident, electronic control units have to be replaced only if at least one of the following conditions is met:

- The housing is visibly deformed or damaged.
- The support area and/or console is deformed (no outside damage evident on the unit).
- The connector is damaged or corroded due to moisture.
- Operation check and/or self-diagnosis of the units reveals the following fault:
  "Control unit faulty ".

If electronic components, e.g. the ABS control unit, have to be removed to allow repair operations to be performed and if they are to be reused afterwards, they must be checked for proper operation according to specifications after they have been refitted.

Printed in Germany – V, 1992

Floor assembly dimensions

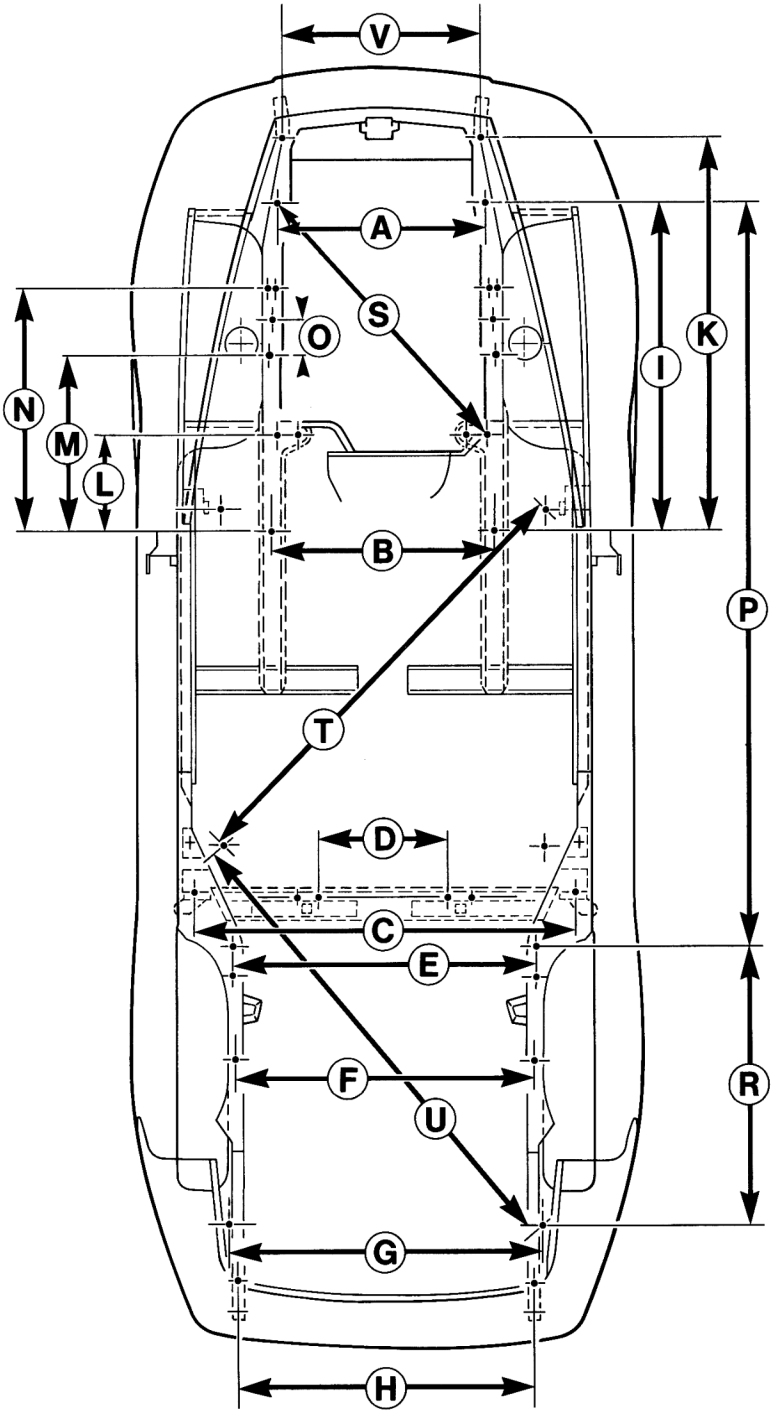

Printed in Germany – IV, 1992

Floor assembly dimensions

Distance	Description	mm
A	Front side member take-up hole	710 ±1
B	Center side member take-up hole	758 ±1
C	Rear axle take-ups	1300 ±2
D	Strengthening member take-ups	380 ±2
E	Rear axle take-ups	1032 ±2
F	Transmission support take-ups	1014 ±2
G	Rear side member take-up hole	1060 ±2
H	Rear impact pipe/impact absorber take-up	1003 ±2
I	Side member take-up hole - front side member take-up hole	(1117 ± 5) 1137 ± 5
K	Side member take-up hole - front edge of side member	(1340 ± 5) 1370 ± 5
L	Side member take-up hole - control arm take-up	330 ±3
M	Side member take-up hole - rear cross member bolt	599 ±3
N	Side member take-up hole - stabilizer bar bolts	831 ±3
O	Rear cross member bolt - front cross member bolt	120 ±3
P	Front side member take-up hole - rear axle take-up	2515 ±3
R	Rear axle take-up - side member take-up hole	886 ±3
S	Side member take-up hole - outer side member take-up	1076 ±5
T	Front floor panel take-up hole - rear floor panel take-up hole	1581 ±5
U	Rear floor panel take-up hole - rear side member take-up hole	1636 ±3
V	Front impact pipe/impact absorber take-up	686 ±3

All distances are measured to the center of the respective holes

Note

The distances are measured directly, hence they give oblique dimensions. The distances in brackets are measured in a horizontal plane.

Caution!

For length measurements, the left-to-right deviation must not exceed the tolerance specified.

Printed in Germany – IV, 1992

Body dimensions

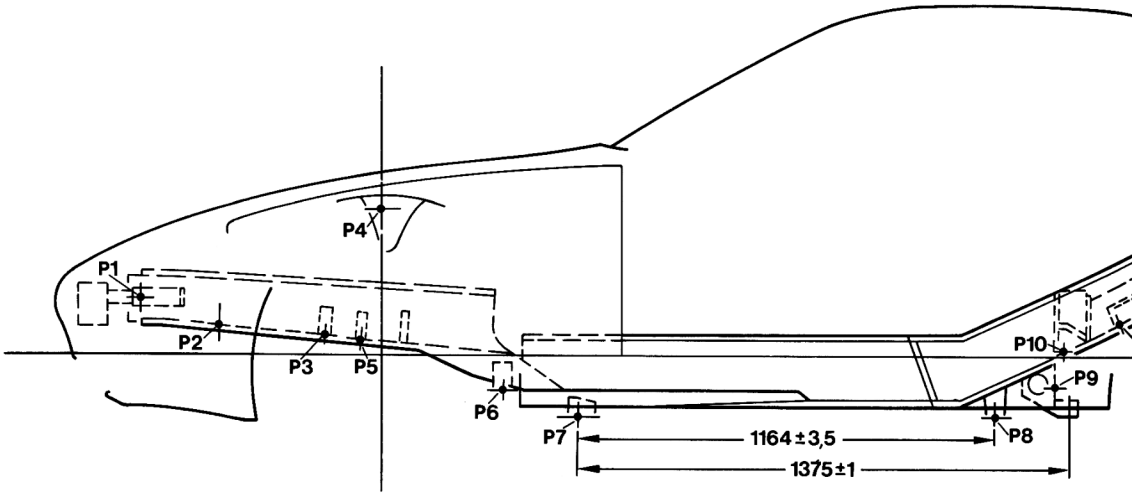

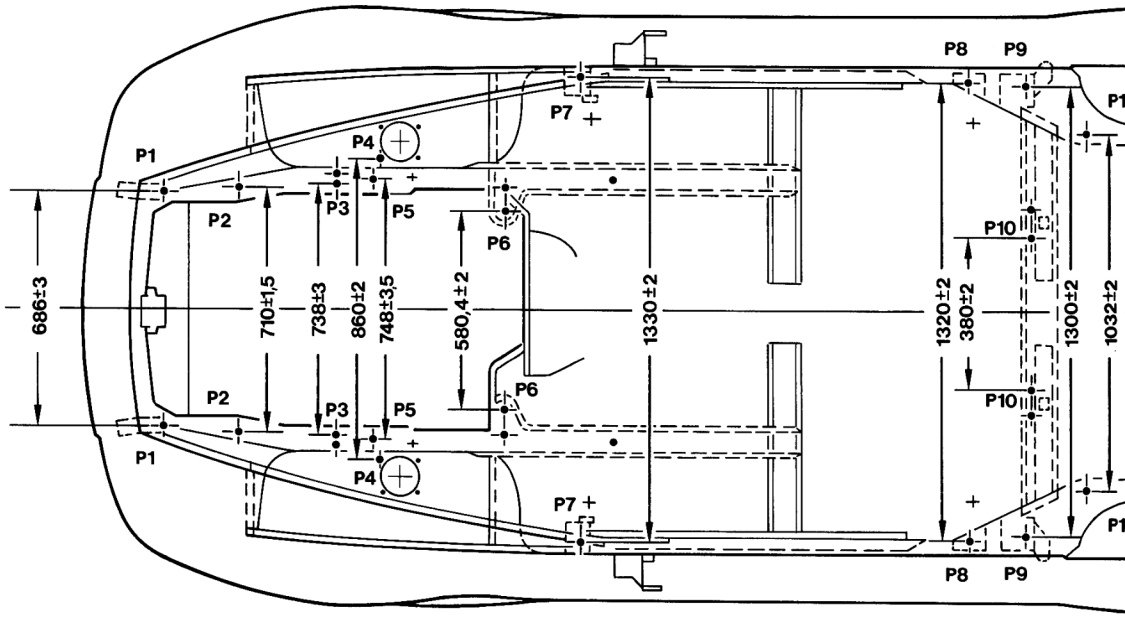

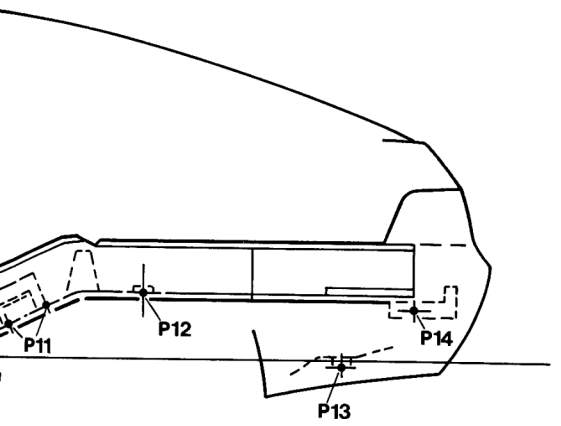

50 - 1034

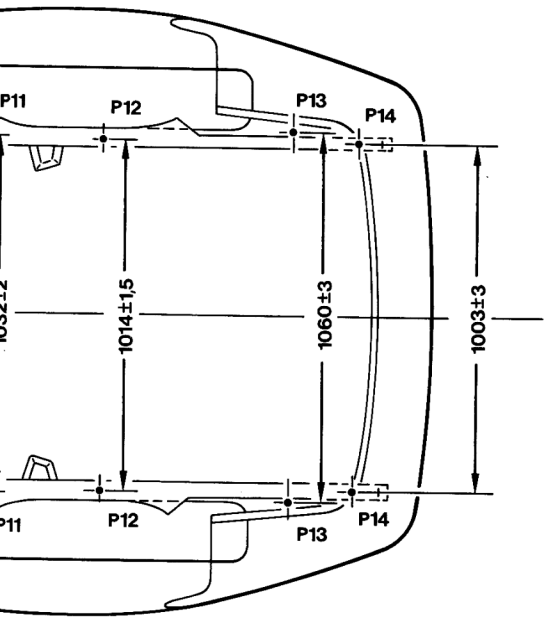

50 - 1033

Pt.LH/RH	Designation
1	Center impact pipe/absorber front
2	Front side member take-up hole
3	Stabilizer bar take-up, FA
4	Spring strut take-up, FA
5	Cross member take-up, FA
6	Control arm take-up, FA
7	Platform lift take-up, Car jack, front
8	Platform lift take-up, Car jack, rear
9	Bearing flange take-up, RA
10	Strengthening member take-up
11	Bearing flange take-up, RA
12	Transmission support take-up
13	Rear side member take-up hole
14	Center impact pipe/absorber rear

FA = Front axle
RA = Rear axle

Checking dimensions for body repairs – Cabriolet

Additions and deviations from the body dimensions valid for the Coupe body

Note

All distances have been measured directly (oblique dimensions).

All dimensions are measured to the center of the respective holes!

Caution!

For length measurements, the left-to-right deviation must not exceed the tolerance specified!

Printed in Germany – IV, 1992

Checking dimensions for body repairs – Cabriolet

Distance	Description	mm
A	Windshield frame left corner to right corner	1245 ± 3
B	Front screw locations of convertible supports	1442 ± 3
C	Rear screw locations of side panels	1328 ± 3
D	Windscreen wiper fitting hole – Windshield corner	985 ± 2
E	Windshield frame corner diagonally to front screw location of convertible support	1502 ± 3
F	Front screw location of convertible support diagonally to rear screw location of side panel	1763 ± 3
G	Front screw location of convertible support to take-up hole of rear center of lock cylinder	1555 ± 3
H	Front screw location of convertible support to rear screw location of side panel	1094 ± 3
I	Corner of windshield frame vertically to spotweld flange of sill (measured without cover molding)	790 ± 2
K	Corner of windshield frame to front screw location of convertible top support	685 ± 2
L	B-pillar top to convertible support	26 ± 1
M	B-pillar top parallel to spotweld flange of sill	470 ± 2
N	From level 0 to tunnel bracket mounting point	790 ± 2
O	Inner mounting points of tunnel bracket	418 ± 2
P	Outer mounting points of tunnel bracket	638 ± 2
Q	From level 0 to center of spring strut tower	27 ± 1

All dimensions are measured to the center of the respective holes!

Printed in Germany – IV, 1992

Checking dimensions for body repairs – Cabriolet

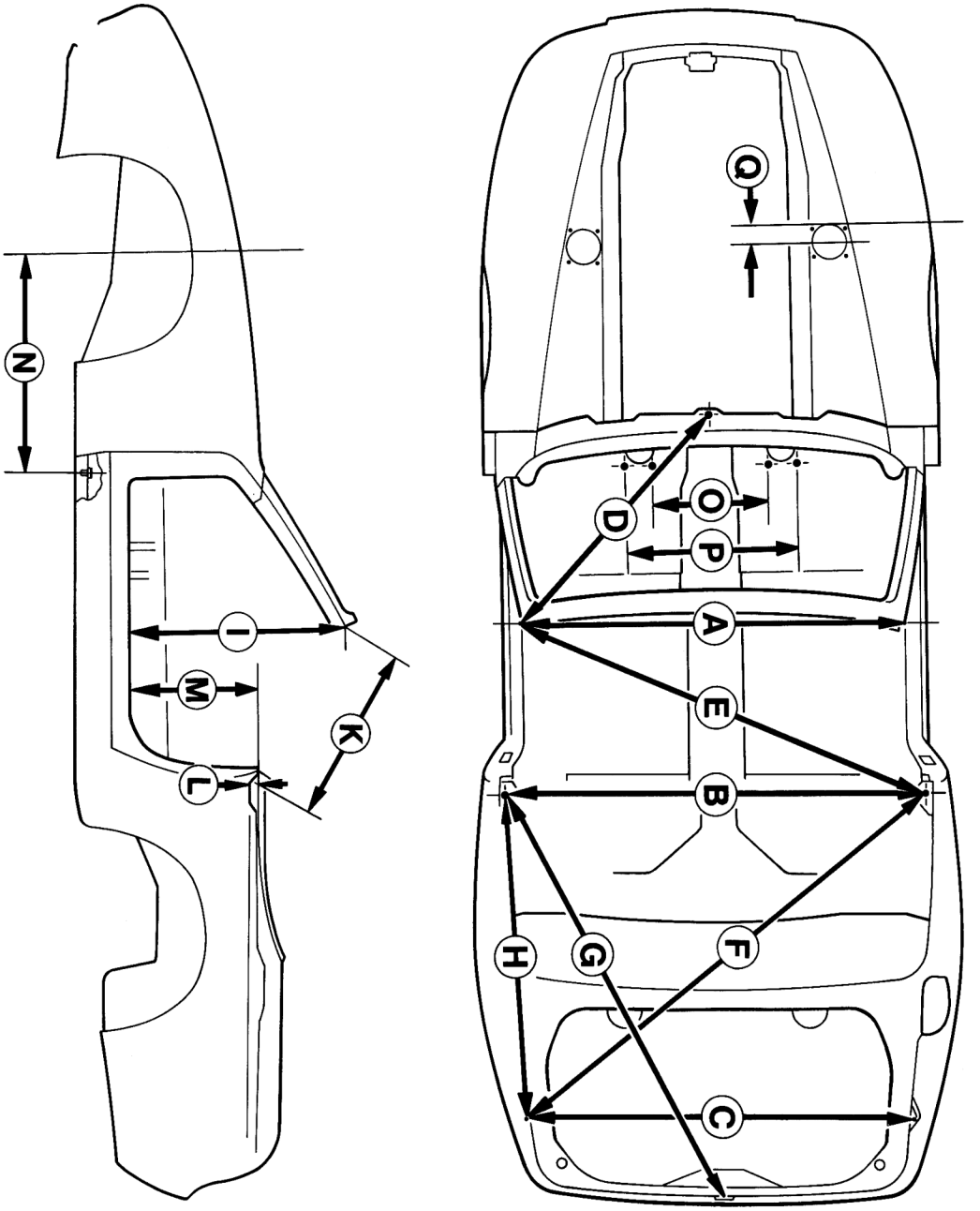

Printed in Germany – IV, 1992

Special Tools and Metalworking Repair Tools

Special Tools:

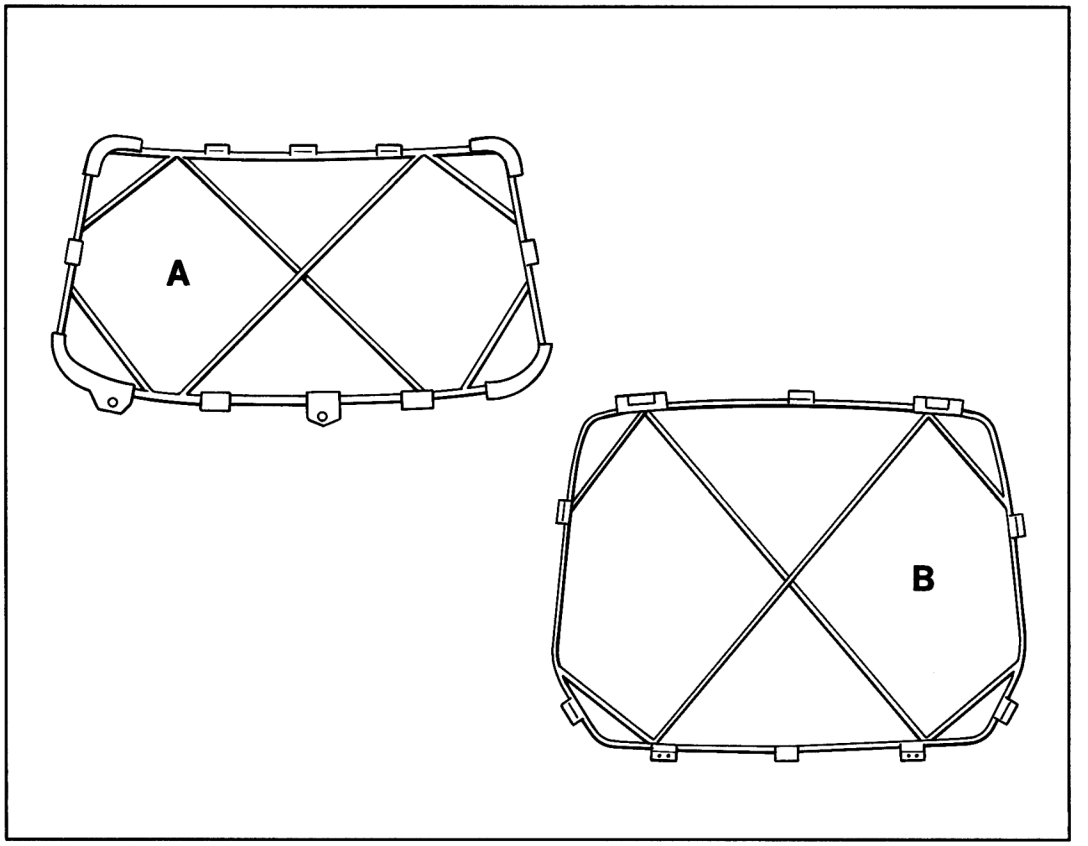

1265 - 50

A = **P 9120** (Gauge for windshield)

B = **P 9121** (Gauge for trunk lid aperture)

Printed in Germany – VII,1992

Metalworking tools (commercially available):

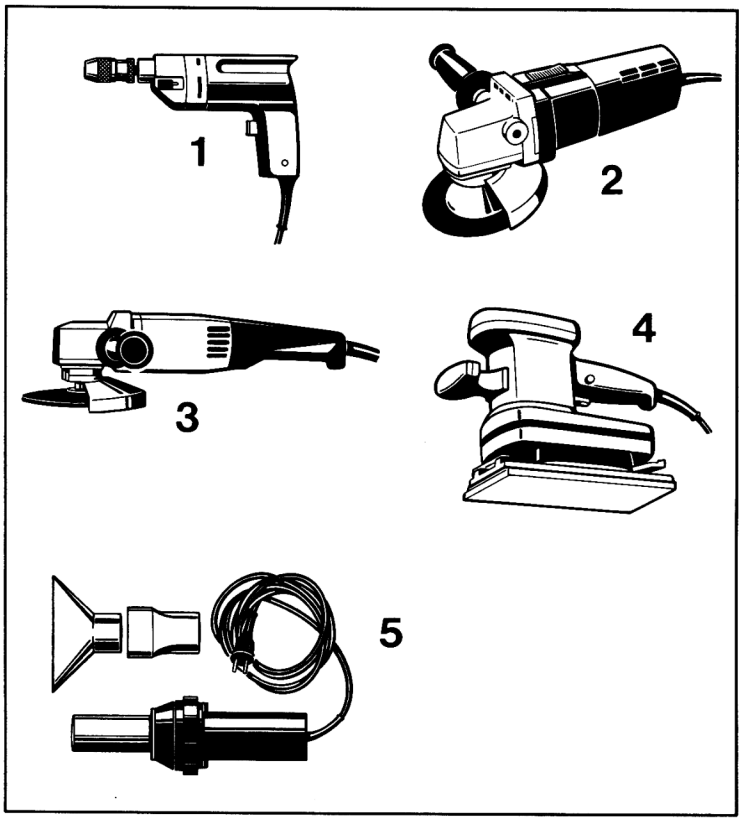

238 - 50

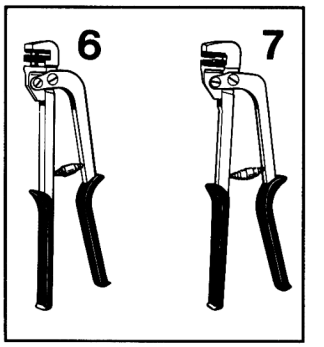

236 - 50

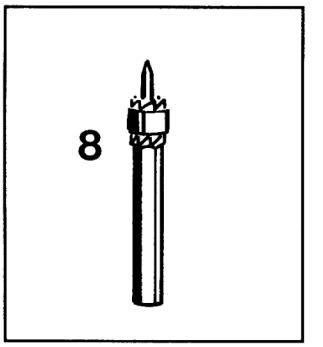

308 - 50

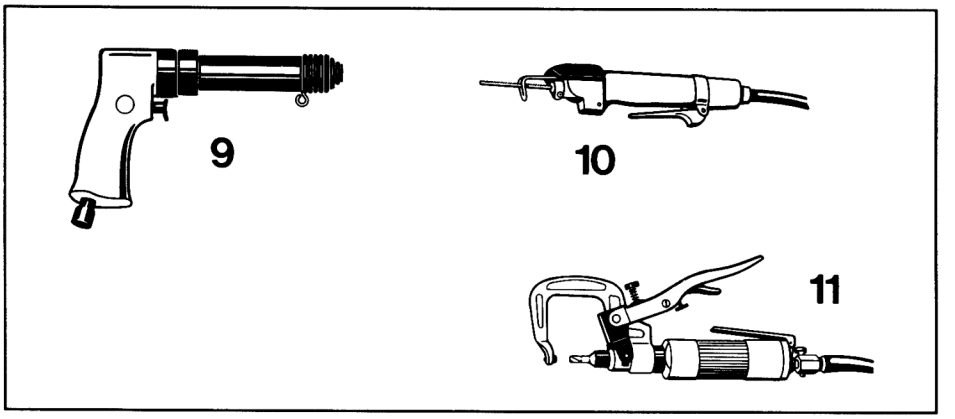

235 - 50

Printed in Germany – VII,1992

Metalworking tools (commercially available):

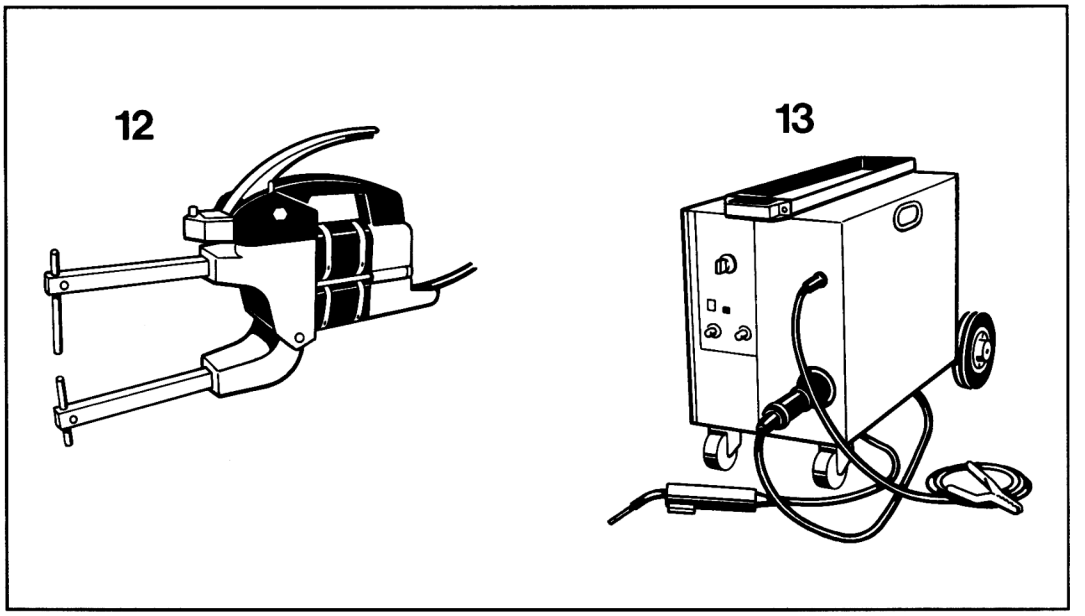

237 -50

Electrical Power Tools:

1 = Drill
2 = Angle grinder, large
3 = Angle grinder, small
4 = Grinder
5 = Hot air gun

Mechanical Power Tools:

6 = Hole punch
7 = Edge setter

Accessories:

8 = Spotweld cutter (for drill)

Air power tools:

9 = Air chisel
10 = Body saw
11 = Spotweld cutter

Welding equipment:

12 = Spotwelder
13 = MIG welder

Printed in Germany – VII,1992

Replacing part of front end

The following body spare parts are required for the "Replacing part of front end" sectional repair operation:

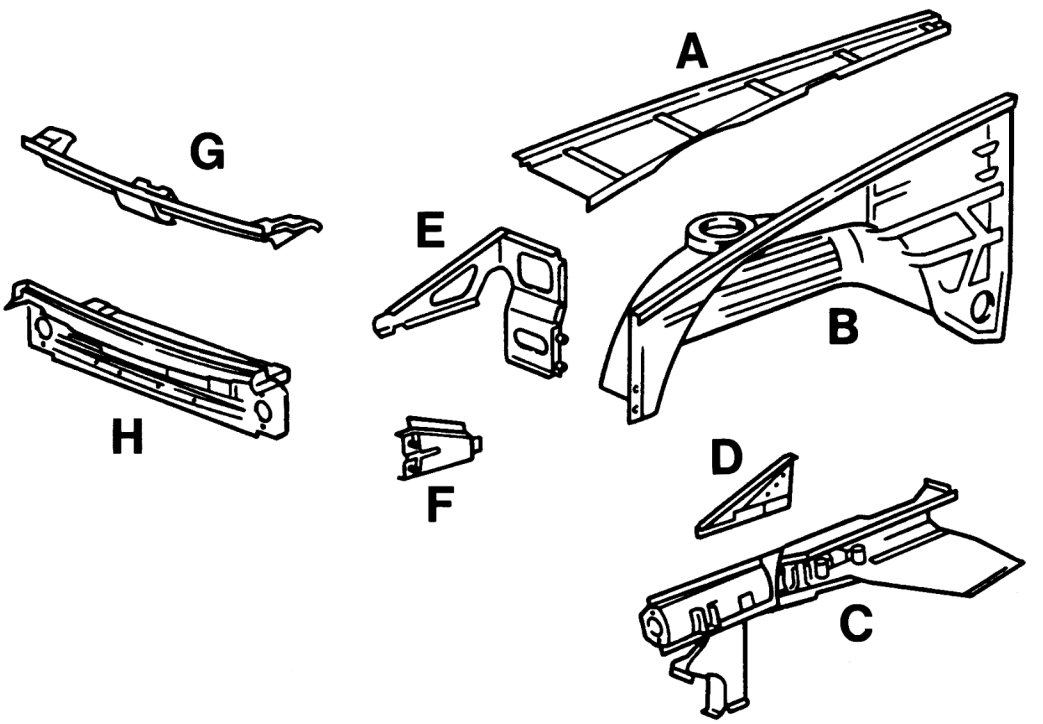

1253 - 50

A = Wheel housing upper section

B = Wheel housing

C = Side member

D = Support panel

E = Wheel housing front section

F = Support for pop-up headlight console

G = Lock support panel

H = Cross member with end section

Printed in Germany – VII,1992

Replacing part of front end

Cutting part of front end out of body

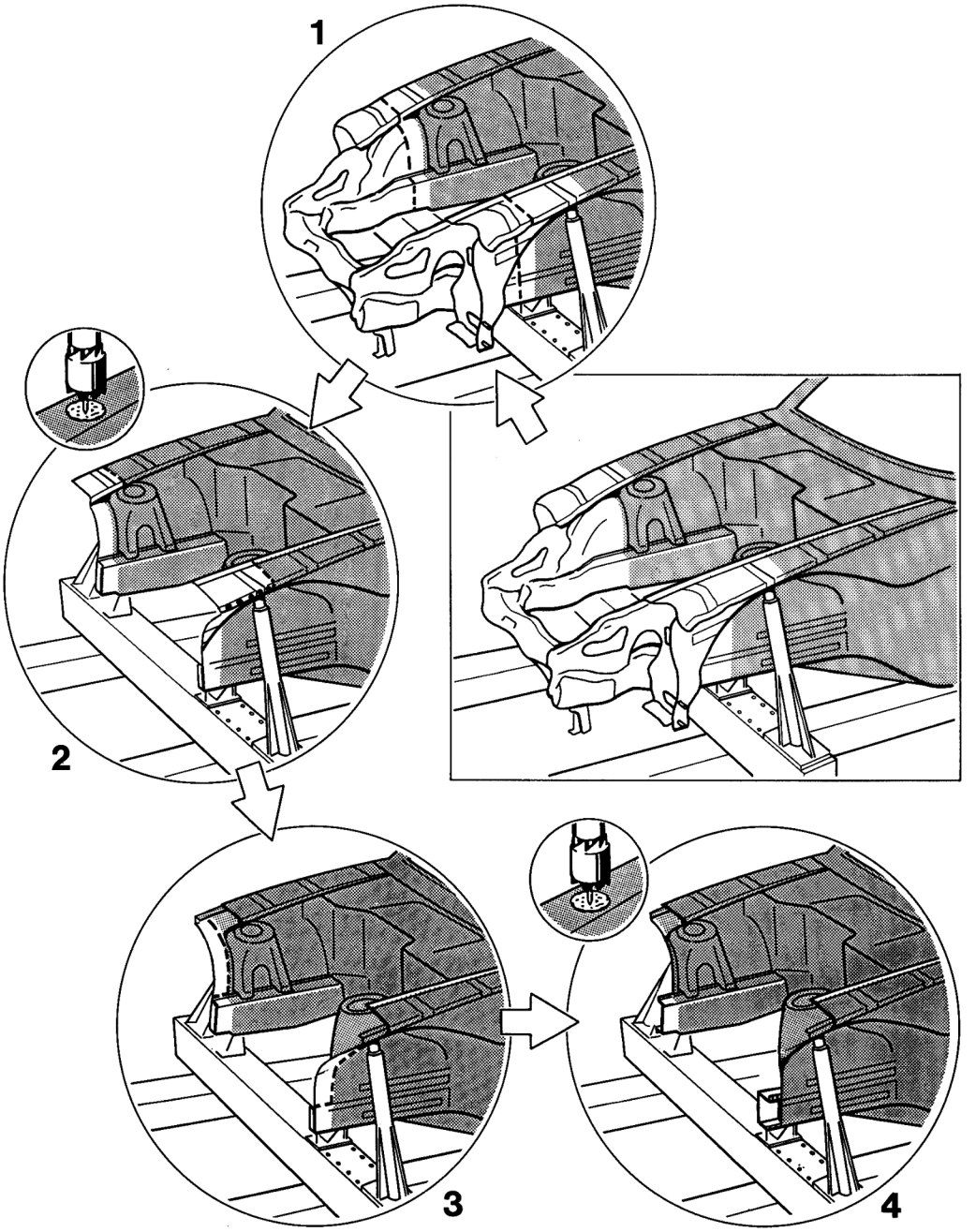

Printed in Germany – VII,1992

Replacing part of front end

Cutting part of front end out of body

Remove all ancillaries and accessories from front end!

No.	Operation	Instructions
	Place vehicle on alignment bench	Place vehicle with rear-mounted ancillaries onto straightening attachment set and tie down vehicle.

All straightening operations in this area of the body must be completed before the damaged components are cut away!

1	Cut damaged area out of body	Cut damaged body panels out of body **ahead of spring strut dome**, using a body saw and angle grinder.
2	Cut through upper wheel housing section and separate spotwelds from wheel housing	Using the body saw, cut through upper wheel housing section in the center area of the spring strut dome. Separate spotwelds between upper wheel housing and wheel housing using the spotweld cutter.
3	Cut through wheel housing and support panel	Cut through wheel housing and support panel along the spotweld flange of the spring strut dome to the side member, using a body saw. **Caution: The cutoff side member must be offset from the wheel housing.** Cut through wheel housing and support panel above the spotweld flange of the side member along a line parallel to the side member, using a body saw.
4	Remove wheel housing and support panel in the side member area	Separate spotwelds of support panel / side member /wheel housing using a spotweld cutter. Remove spotwelds between spring strut dome and support panel using an angle grinder. Cut through wheel housing in side member area.

Printed in Germany – VII,1992

Replacing part of front end

Fitting part of front end into body

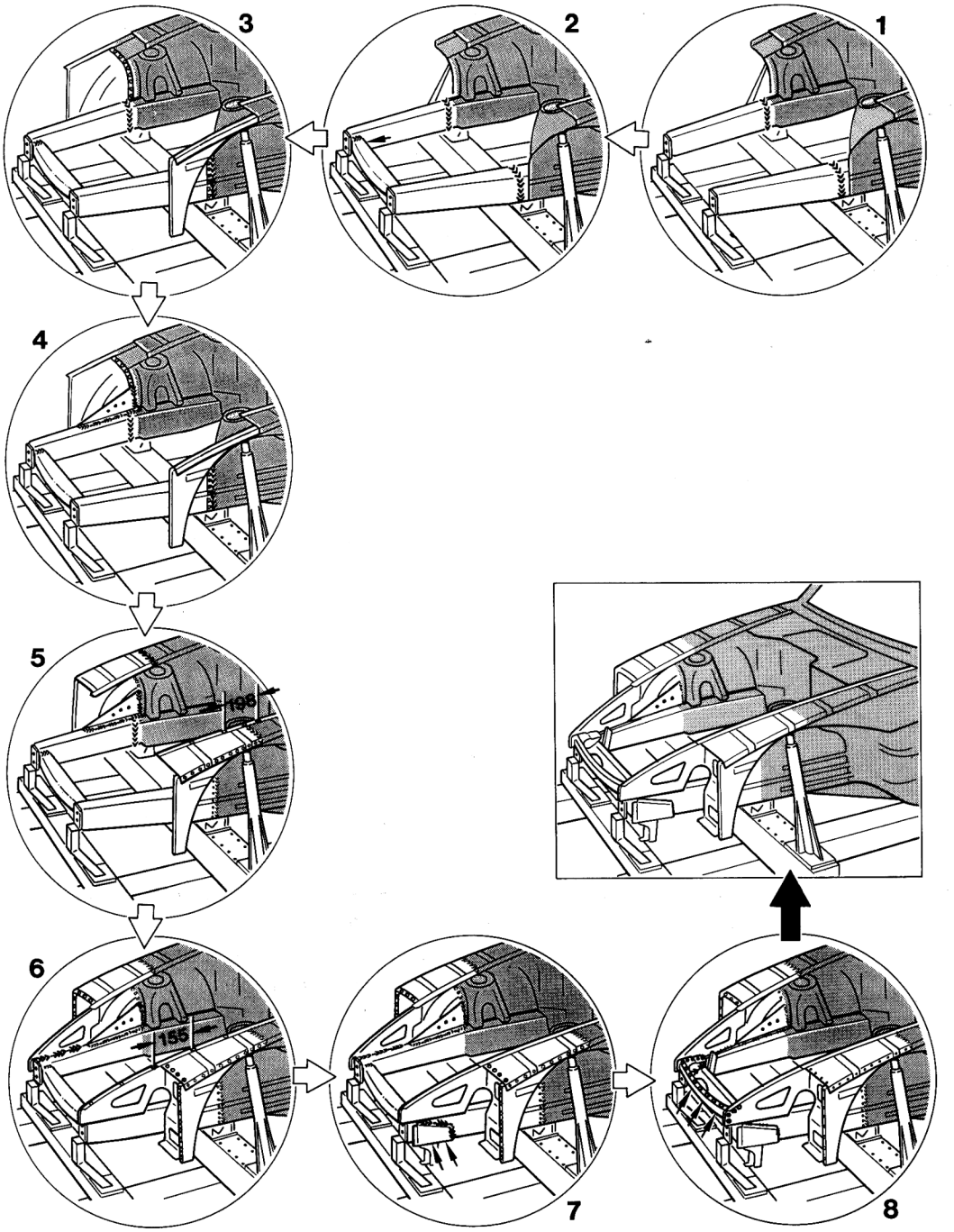

Printed in Germany – VII,1992

Replacing part of front end

Fitting part of front end into body

No.	Operation	Instructions
	Clean welding areas	Using a hot air gun or rotary wire brush, remove undersealing, paint etc. from welding areas of body. Remove factory primer from welding areas of spare parts, using a rotary wire brush.
1	Offer up side member to body and MIG-weld to body	Offer up side member spare parts to body side member, making a butt joint. Attach side member spare parts to straightening brackets for impact pipe mount. MIG-weld side member spare parts to body side members, running a butt full seam.
2	Offer up cross member with closing section to body and MIG-weld to body	Remove straightening bracket for impact pipe mount. Offer up cross member with closing section between side members. Fit impact pipe straightening bracket and MIG-weld cross member with closing section to lower and upper side members, running a full seam.
3	Offer up wheel housings to body, spotweld and MIG-weld to body	Trim wheel housings until they can be adjusted at the holes for the strut mount. Offer up wheel housing spare parts to body wheel housings and adjust to side members, attach with clamping tools and scribe contours. Trim wheel housings according to contours and joddle towards the outside. Spotweld and plug weld (with MIG equipment) wheel housings to closing panels. MIG-weld wheel housings from outside, running an intermittent full seam.
4	Offer up support panels to body and MIG-weld them to body	Offer up support panels to side members, wheel housings and spring strut dome reinforcement; MIG-weld them running an intermittent seam and plug-weld them using MIG equipment.

Printed in Germany - VII, 1992

No.	Operation	Instructions
5	Offer up wheel housing upper sections and MIG-weld to body	Offer up wheel housing upper sections, trim them and joddle them towards the bottom. MIG-weld wheel housing upper sections in wheel housing and fender landing panel areas, running a butt full seam. Plug-weld them using MIG equipment on the surface areas and along the wheel housings towards the front.
6	Offer up wheel housing front sections and MIG-weld and spotweld	Place wheel housing front sections onto side members, adjust them and MIG-weld them to the side members, running an intermittent full seam. Spotweld wheel housing front sections to wheel housings and wheel housing upper sections.
7	Adjust supports for pop-up headlight consoles and MIG-weld to body	Position front welding flanges of supports for pop-up headlights so that they are flush with the side members. MIG-weld supports for pop-up headlights to side members, running an intermittent full seam.
8	Offer up lock support panel and MIG-weld and spotweld, respectively	Offer up lock support panel into body and spotweld to closing section and wheel housing front sections. MIG-weld lock support panel to side members and cross member, running an intermittent full seam.

Printed in Germany - VII, 1992

Replacing part of door sill with side member and floor pan

The following body spare parts are required for this sectional repair:

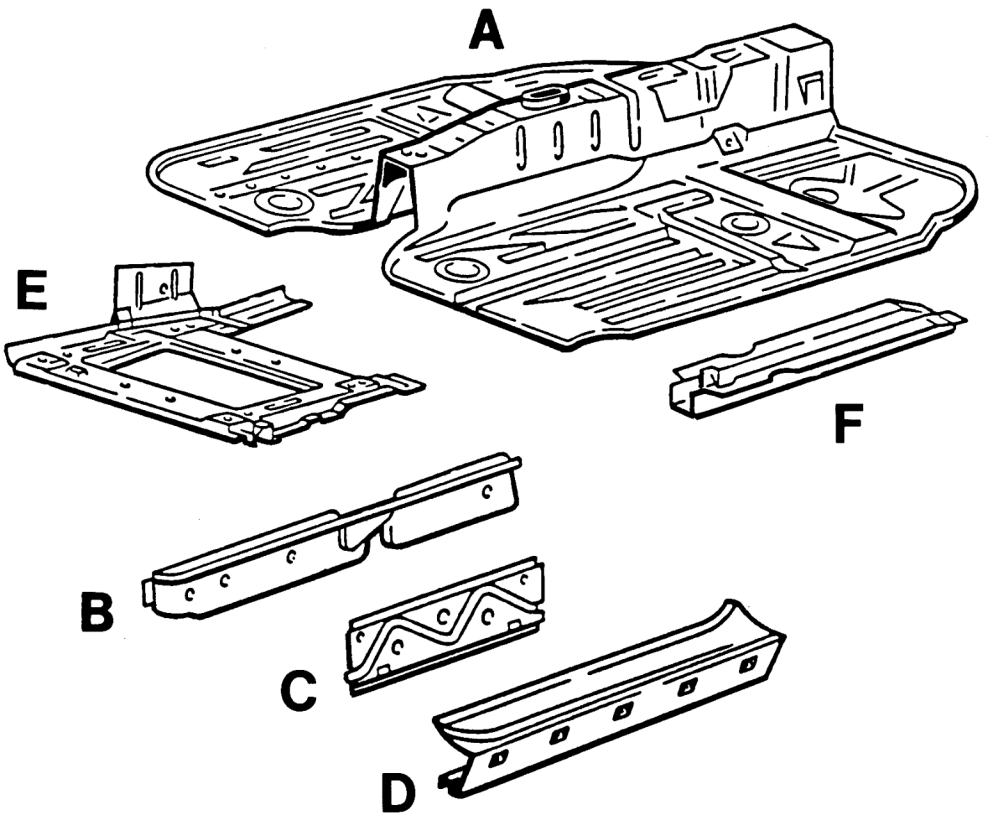

A = Floor pan center
B = Side member center
C = Web panel
D = Door sill
E = Seat base
F = Side member floor

1328-51

Printed in Germany – VIII, 1993

Replacing part of door sill with side member and floor pan

Cutting part of door sill with side member and floor pan out of body

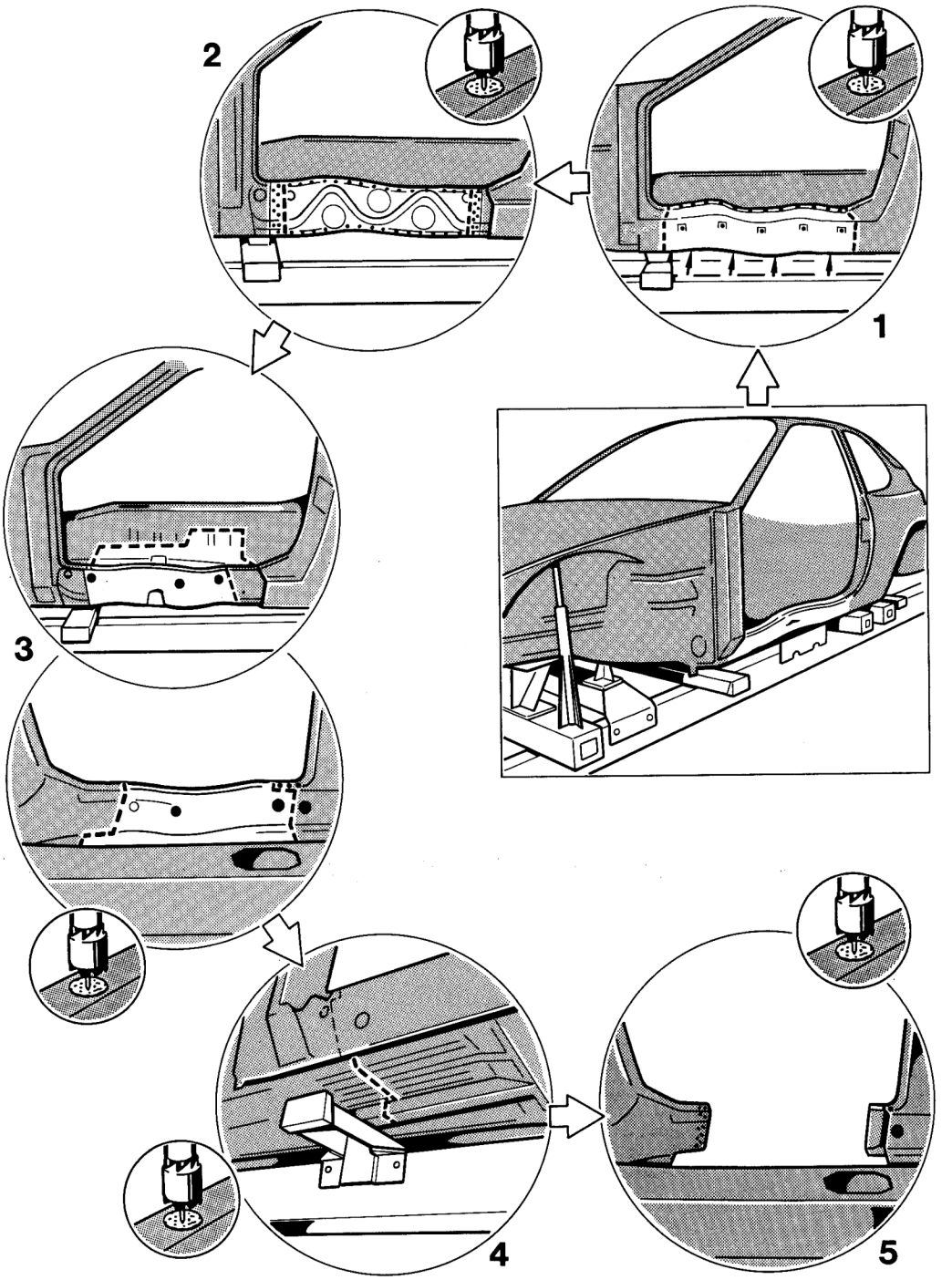

Printed in Germany – VIII, 1993

Replacing part of door sill with side member and floor pan

Cutting part of door sill with side member and floor pan out of body

Remove all ancillaries and accessories, including the interior, from center body area and front fender area!

No.	Operation	Instructions
	Place vehicle on alignment bench	Place vehicle without ancillaries onto attachment set.
1	Cut through door sill and separate spotwelds	Using a body saw, cut through door sill ahead of outer side panel and ahead of outer hinge post area. Use a spotweld cutter to separate spotwelds between door sill and center of side member, floor pan center and hinge post.
2	Cut through web panel and separate spotwelds	Using a body saw, cut through web panel ahead of rear inner side panel and ahead of front inner side panel. Use a spotweld cutter to separate spotwelds between web panel and center of side member, floor pan center, rear inner side member and front inner side member.
3	Cut through center of side member, floor pan center and tunnel	Cut through side member center ahead of rear side member and ahead of hinge post, floor center behind seat base and ahead of hinge post as well as along tunnel using a body saw.
4	Cut through floor side member and separate spotwelds	Cut though floor side member at an offset to floor pan, using a body saw. Separate spotwelds between floor side member and floor pan using a spotweld cutter.
5	Separate spotwelds between center side member / rear side member	Use a spotweld cutter to separate spotwelds between center side member and rear side member.

Printed in Germany – VIII, 1993

Replacing part of door sill and floor pan

Fitting part of door sill with side member and floor pan into body

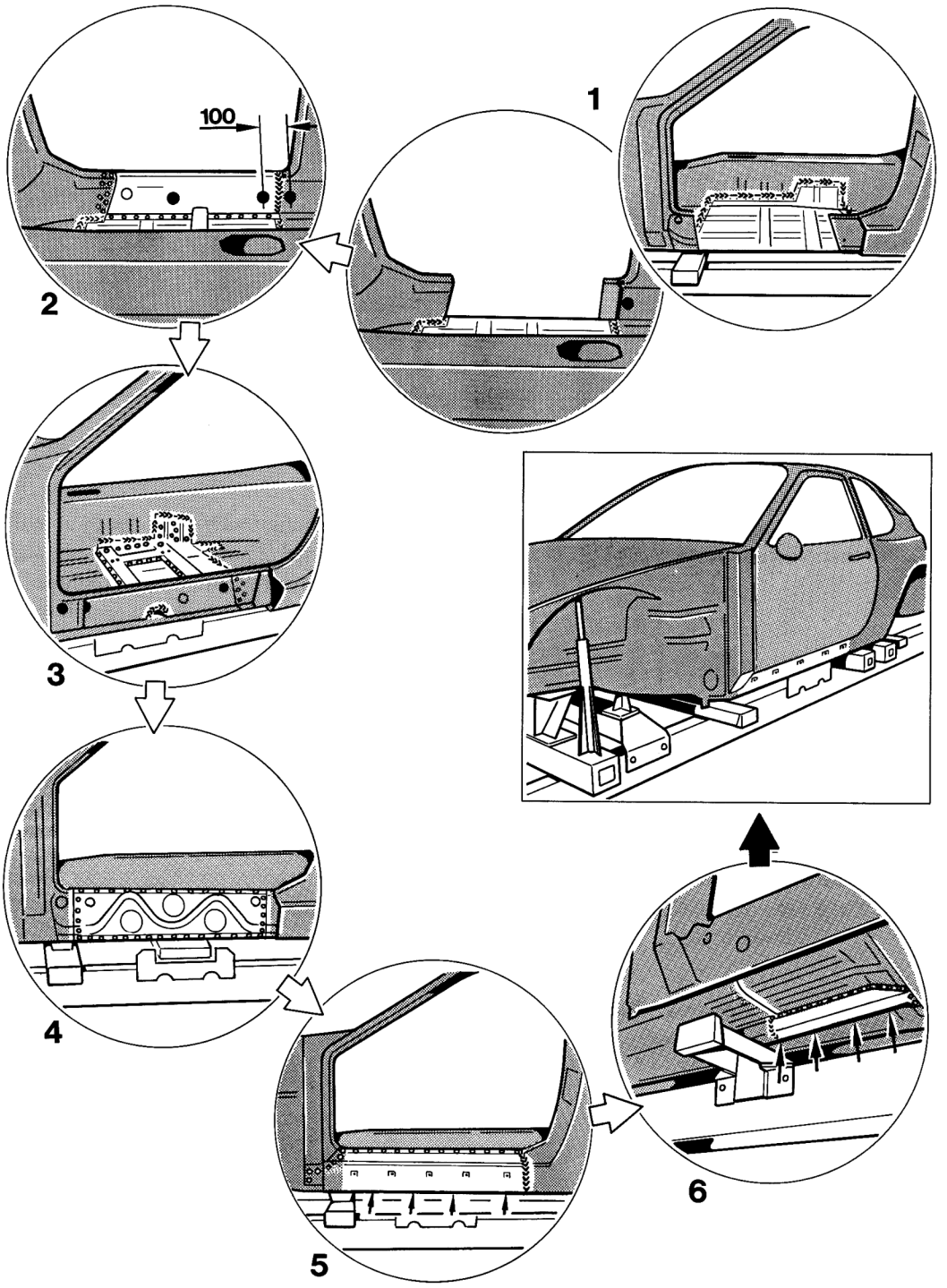

Printed in Germany – VIII, 1993

Replacing part of door sill with side member and floor pan

Fitting part of door sill with side member and floor section into body

No.	Operation	Instructions
	Perform straightening operations and adjust body with attachment set	Perform all straightening operations on the bodywork. Adjust body with attachment brackets. Trial-fit door into body aperture. The door gap between door and body must be uniform along the entire surround.
	Clean welding areas	Using a hot air gun or rotary wire brush, remove undersealing, paint etc. from welding areas of body. Remove factory primer from weldings areas of spare panels with a rotary wire brush.
	Fit floor pan into body and prepare for welding	Fit spare floor panel into body, making an overlap fit in the floor and tunnel areas. Joddle spare floor panel to the inside in those areas. Drill spare floor panel for plug welding.
1	Weld floor panel into body	Clamp spare floor panel with clamping tools. Plug weld spare floor panel with rear floor, front floor and tunnel using MIG equipment. MIG-weld overlapping areas between spare floor panel and floor pan, running an intermittent full seam.
	Prepare center side member for fitting into body	Prepare center side member along front side member mating flange for full-seam MIG welding and along floor pan flange for MIG plug welding.
2	Fit center side member into body and MIG-weld	Fit center side member into body and adjust according to door and seat base contours. Plug-weld center side member to rear side member and floor pan using MIG equipment.

Printed in Germany – VIII, 1993

No.	Operation	Instructions
3	Prepare seat base for fitting and weld into place	Drill seat base along spotweld flanges for plug welding. Plug weld seat base to center floor panel and tunnel, using MIG equipment. MIG-weld seat base to center side member running an intermittent full seam.
4	Fit web panel and weld into place	Drill web panel along front and rear spotweld flanges for plug welding. Fit web panel to center side member and center floor using clamping tools and spotweld into place. Plug weld web panel to rear inner side panel and front side panel, using MIG equipment.
5	Fit door sill and weld into place	Adjust rear end of spare door sill to body sill, making a butt joint. Drill door sill in hinge post mating area for plug welding. Fit door sill into body and adjust according to door contours. Fit door sill to center floor pan and center side member using clamping tools. MIG-weld spare door sill to body door sill running a full seam, making a butt-joint. Spotweld door sill to center floor pan, center side member and web panel. Plug-weld door sill to hinge post using MIG equipment.
6	Fit floor side member and weld into place	Fit spare floor side member to body flor side member, making a butt joint. Drill floor side member along spotweld flanges for plug welding. MIG-weld spare floor side member to body side member, making a butt joint. Plug weld floor side member to floor pan, using MIG equipment.

Printed in Germany – VIII, 1993

Replacing complete roof

The following body spare parts and special tools are required when the complete roof is to be replaced:

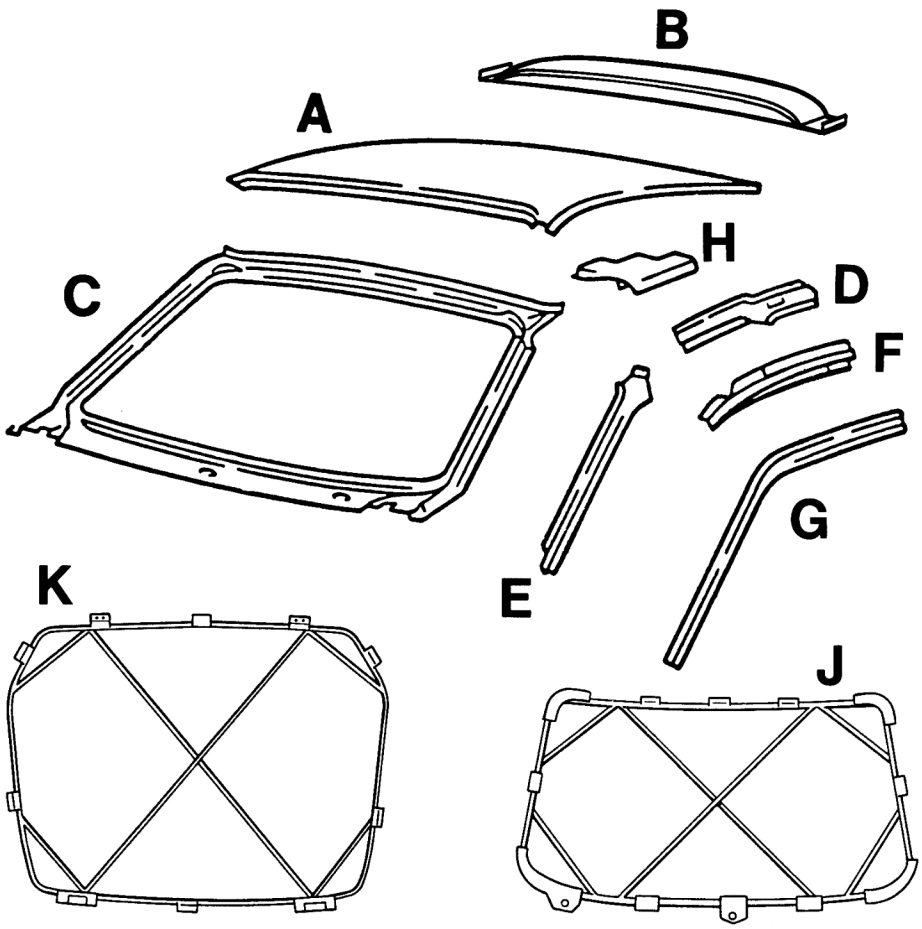

1346-51

A = Outer roof panel
B = Rear roof rail
C = Windshield frame
D = Upper side panel
E = Inner side panel
F = Lock panel
G = Roof rail
H = Reinforcement
J = Special Tool P 9120
K = Special Tool P 9121

Printed in Germany – VIII, 1993

Replacing complete roof

Cutting roof panel and roof rail out of body

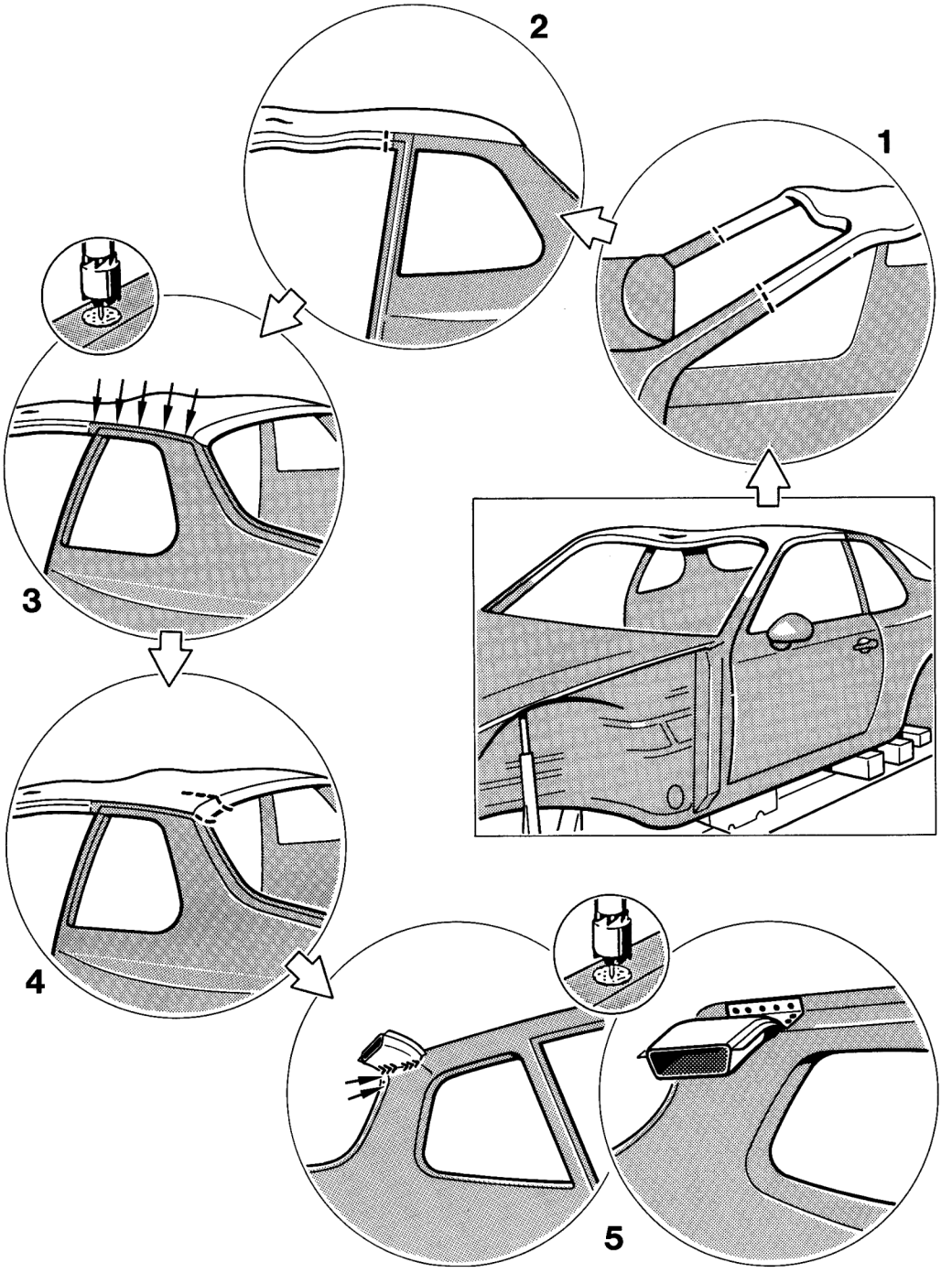

Printed in Germany – VIII, 1993

Replacing complete roof

Cutting roof panel and roof rail out of body.

Remove all ancillaries and accessories and the entire interior including all window glass!

All straightening operations must be completed before the roof is replaced!

No.	Operation	Instructions
	Place vehicle onto straightening equipment	Place vehicle without ancillaries onto attachment set and tie down vehicle.
1	Cut through A-pillars	Cut A-pillars using a body saw.
2	Cut through roof rail and roof panel	Cut through roof rail and roof panel ahead of B-pillar using a body saw.
3	Separate welds of roof	Separate spotwelds between roof and rear side panel using a spotweld cutter
4	Cut through rear roof rail and roof panel	Cut through rear roof rail and roof panel using a body saw. Cut through welds of roof to outer and inner rear side panel using a body saw.
	Lift complete roof off the body	
5	Separate spotwelds of rear roof rail	Grind off welds between rear roof rail and inner side panel and separate with spotweld cutter. Separate spotwelds between rear roof rail and roof rail with a spotweld cutter.

Printed in Germany – VIII, 1993

Replacing complete roof

Fitting roof panel and roof rail into body

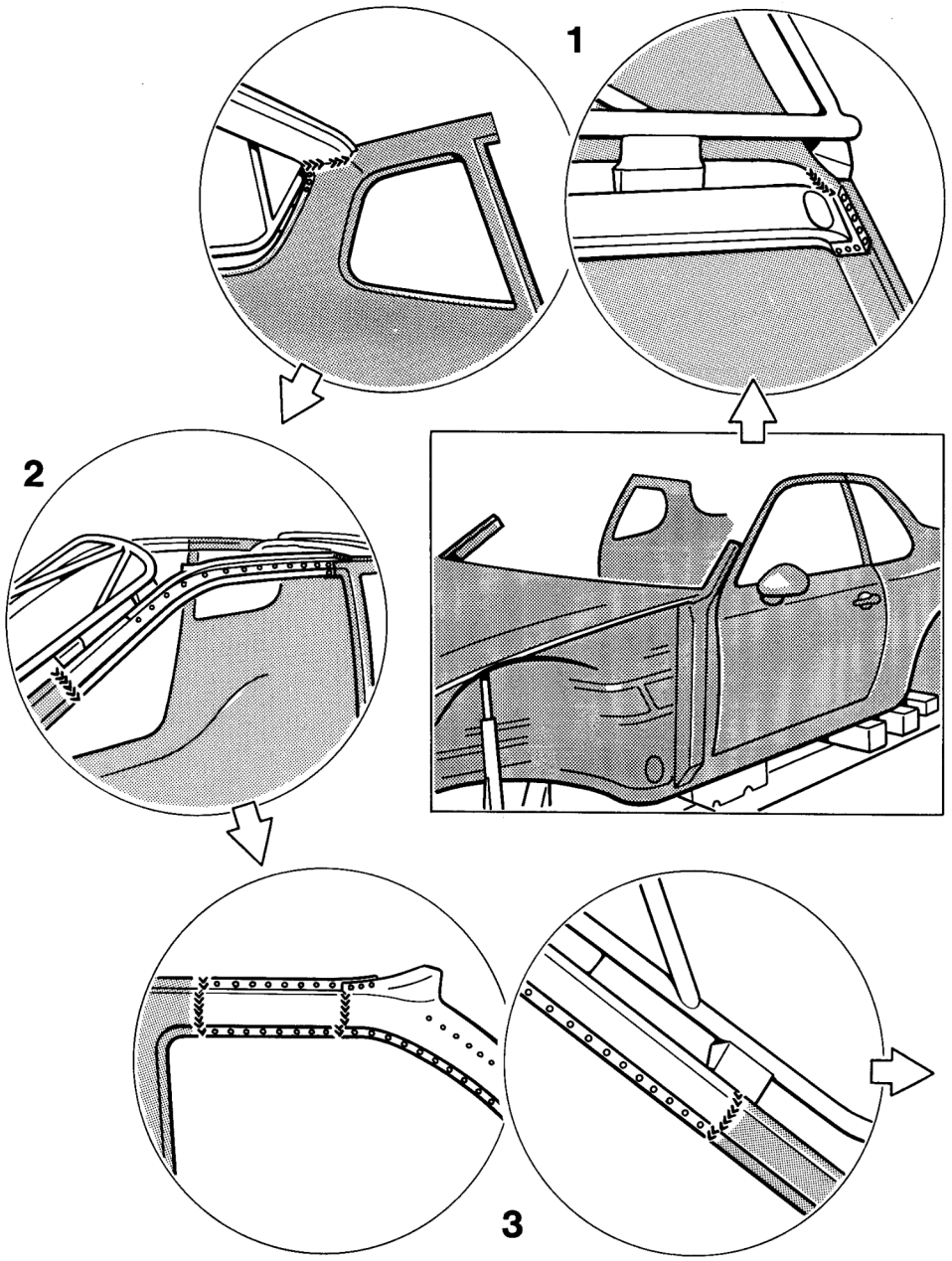

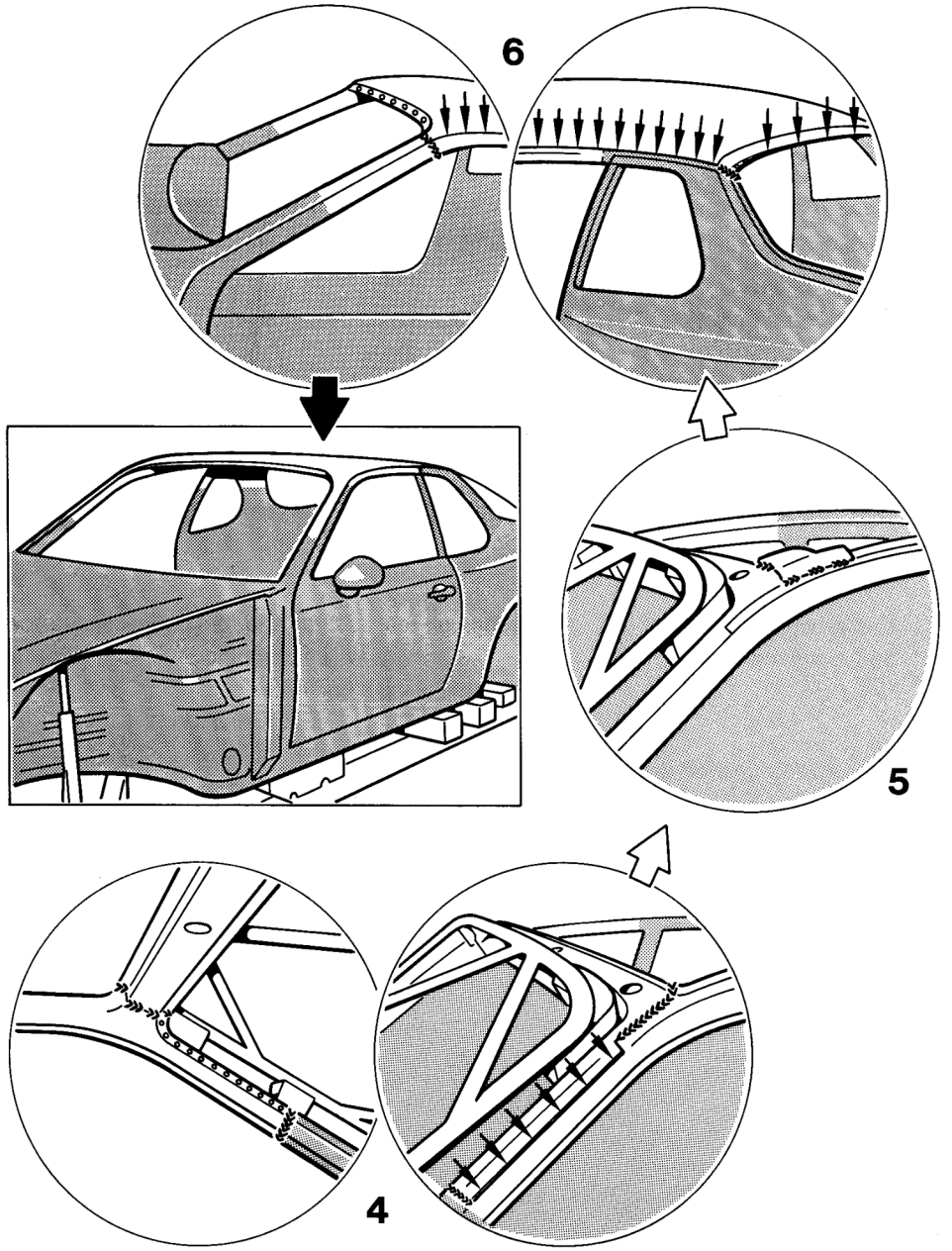

Replacing complete roof

Printed in Germany, VIII – 1993

Replacing complete roof

Fitting roof panel and roof rail into body

No.	Operation	Instructions
	Clean welding areas	Using a hot air gun or a rotary wire brush, remove sealant residue, paint etc. from welding areas of body. Remove factory primer from welding areas of spare panels.
1	Fit rear roof rail to body and weld into place	Fit rear roof rail to body using Special Tool **P 9121** and attach with clamps. MIG-weld rear roof rail to outer rear side panel, running a full seam. Spotweld rear roof rail to roof rail. MIG-weld and spotweld rear roof rail to rear inner side panel, running an intermittent full seam.
2	Fit closing panel, roof rail and inner side panel to body and weld into place	Fit closing panel, roof rail and inner side panel to body according to door contours, using Special Tool **P 9120**, and clamp into place with suitable clamps. Tack-weld closing panel and roof rail to body. Remove inner side panel from body. Spotweld closing panel, roof rail and B-pillar. MIG-weld roof rail of body A-pillar to spare roof rail, running an intermittent full seam.
3	Fit upper side panel and inner side panel to body and weld into place	Fit upper side panel and inner side panel to body, using Special Tool **P 9160**, and clamp into place with suitable clamps. Spotweld upper side panel and inner side panel to roof rail and closing panel. MIG-weld upper spare side panel to body side panel and inner side panel, running a full seam. MIG-weld inner spare side panel to inner body side panel, running a full seam.

Printed in Germany, VIII - 1993

No.	Operation	Instructions
4	Fit windshield frame to body and weld into place	Fit windshield frame into body, using Special Tool **P 9120**, and attach with clamps. MIG-weld windshield frame to closing panel, running a full seam. MIG-weld spare windshield frame panel to body windshield frame, running a full seam. MIG-weld windshield frame to inner side panel, running an intermittent full seam. Spotweld windshield frame to inner side panel and roof rail.
5	Fit reinforcement to body and weld into place	Fit reinforcement into roof rail and MIG-weld from **outside** and **inside**, running an intermittent full seam.
6	Fit roof outer panel to body and weld into place	Fit roof outer panel into body, using Special Tools **P 9120** and **P 9121**, and attach with clamps. Spotweld roof outer panel to roof rail. MIG-weld roof outer panel to windshield frame and rear outer side panel, running a full seam.

Printed in Germany, VIII - 1993

Replacing part of rear end

The following body spare parts are required for the "Replacing part of rear end" sectional repair operation:

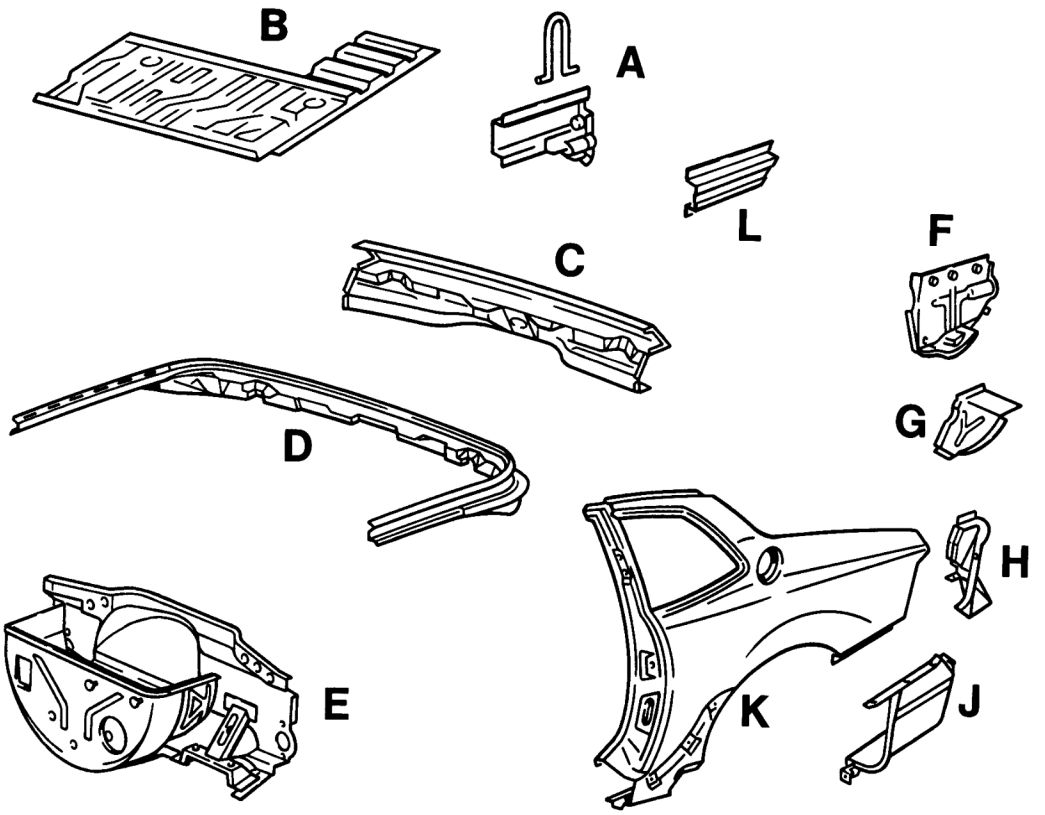

1278 - 53

A = Rear side member
B = Trunk floor panel
C = Upper closing section
D = Reinforcement
E = Lower closing section
F = Lock panel
G = Corner section
H = Outer closing section
I = Lower side panel
K = Side panel
L = Side member reinforcement

Printed in Germany – VII,1992

Replacing part of rear end

Cutting part of rear end out of body

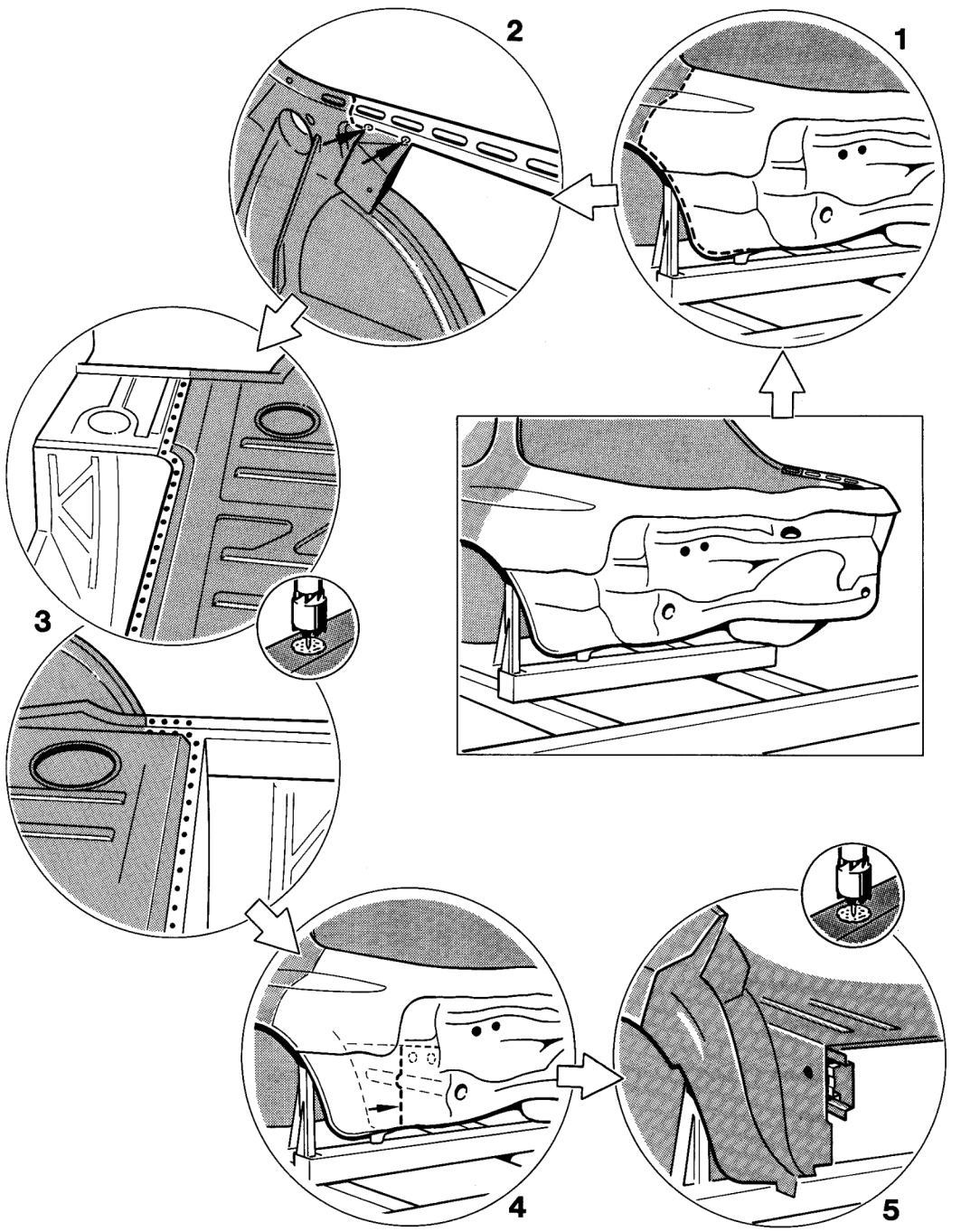

Printed in Germany – VII,1992

Replacing part of rear end

Cutting part of rear end out of body

Remove all ancillaries and accessories from the rear end area!

No.	Operation	Instructions
	Place vehicle on alignment bench	Place vehicle with front-mounted ancillaries onto set of straightening attachments and tie down vehicle.

All body straightening operations in this area must be completed before the damaged parts are cut away!

1	Cut side panels out of body	Cut damaged area of side panels from body, using a body saw.
2	Cut off reinforcement for side panels and separate welds for support of seat belt mounting	Cut off reinforcement for side panels, using a body saw. Separate welds for support of seat belt mounting, using an angle grinder.
3	Separate spotwelds for closing panel	Separate spotwelds between lower closing panel and trunk floor panel, using a spotweld cutter.
4	Cut off side member and lock panels	Cut off damaged areas of side members and closing panels, using a body saw.
5	Cut off lock panels, leaving an offset	Cut off lock panels in such a manner that the cutting edges of the lock panels form an offset. Separate spotwelds between side member and lock panels, using a spotweld cutter. Cut off separated lock panels, using a body saw.

Printed in Germany – VII,1992

Replacing part of rear end

Fitting part of rear end into body

Printed in Germany – VII,1992

Replacing part of rear end

Fitting part of rear end into body

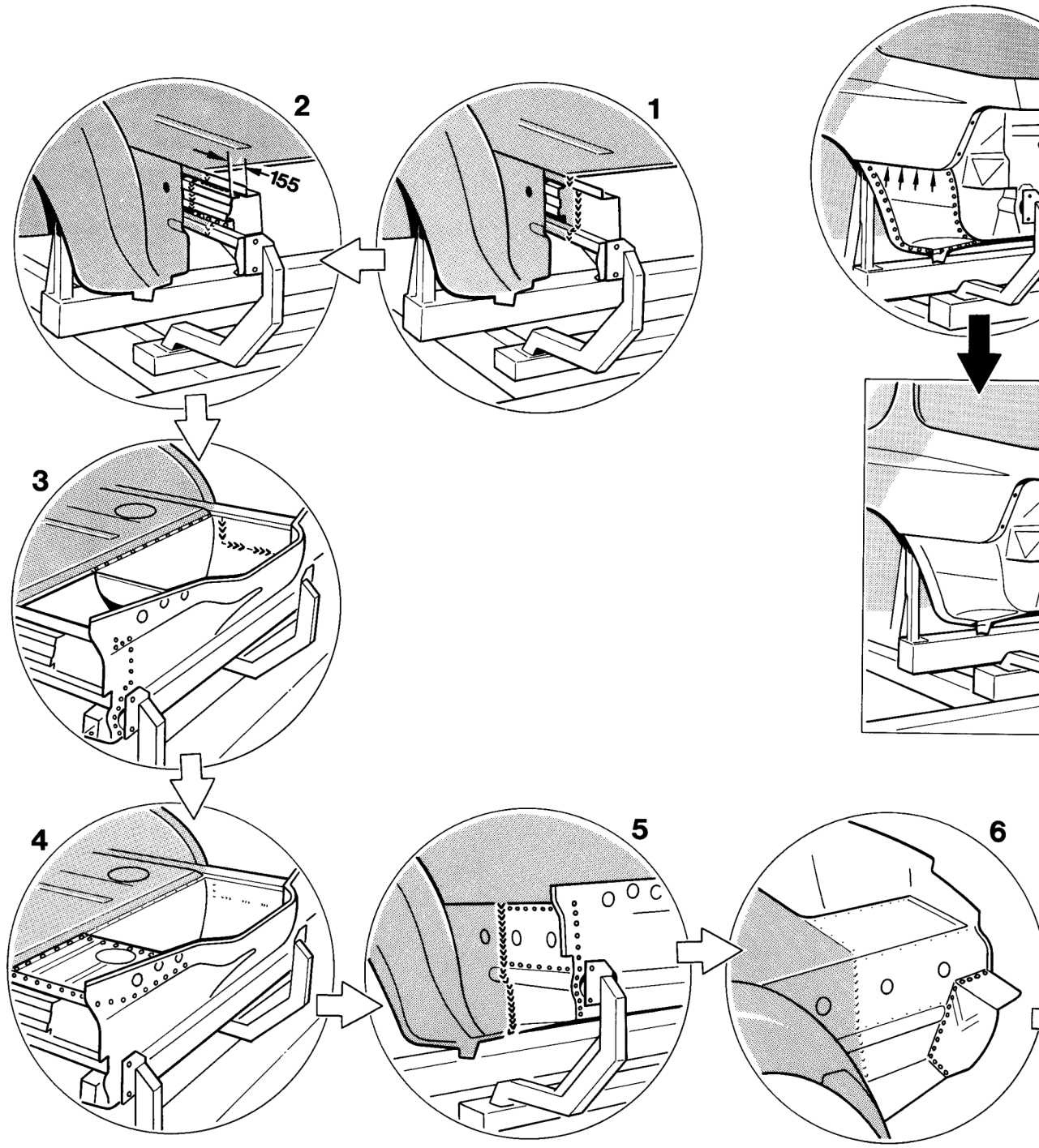

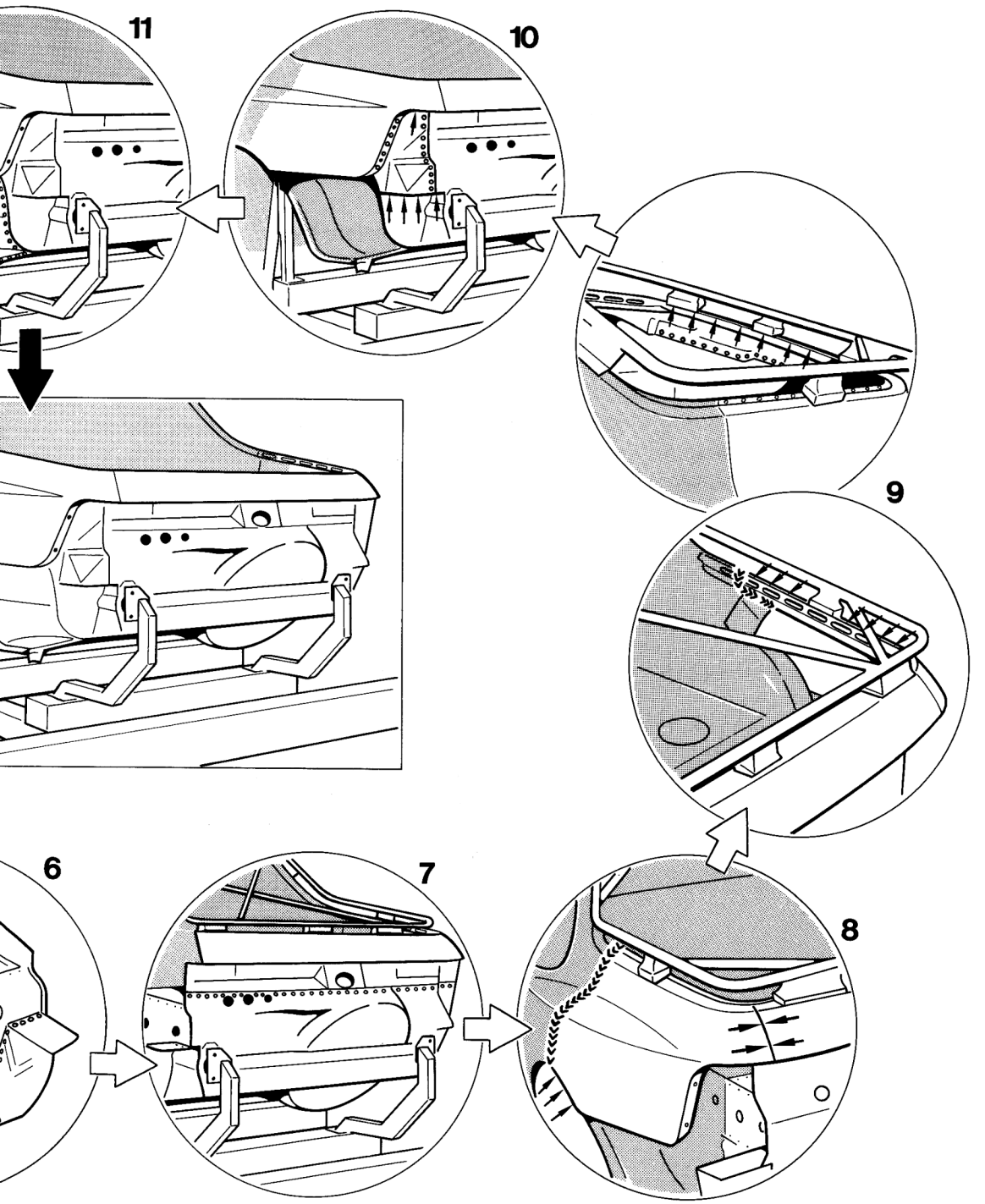

Replacing part of rear end

Printed in Germany – VII,1992

Replacing part of rear end

Fitting part of rear end into body

No.	Operation	Instructions
	Clean welding areas	Using a hot air gun or rotary wire brush, remove undersealing, paint etc. from welding areas of body. Remove factory primer from welding areas of spare parts, using a rotary brush.
1	Offer up side member to body and MIG-weld to body	Offer up side member spare parts to body side members, making a butt joint. Attach side members to straightening bracket for impact tube mounts. **Caution: Place a 3 mm spacer between side member and straightening bracket.** MIG-weld side member spare parts to body side members, making a butt full seam.
2	Offer up reinforcements for side members to body and MIG-weld to body	Offer up spare reinforcements to body at an offset to the side member weld seams. MIG-weld spare reinforcements to body reinforcements, running a butt full seam. Plug-weld spare reinforcements to side members, using MIG equipment.
3	Offer up lower closing section to body and MIG-weld to body	Attach lower closing section to straightening brackets for impact tube mounts. Offer up lower closing section to trunk floor panel and side members and attach with clamps. Plug weld lower closing section to trunk floor panel and side members, using MIG equipment.
4	Offer up trunk floor panel to body and weld to body	Offer up spare trunk floor panel to lower closing section, side members and trunk floor panel and plug-weld, using MIG equipment.

Printed in Germany – VII,1992

No.	Operation	Instructions
5	Offer up lock panels to body and weld to body	Offer up spare lock panels to body lock panels, side members and lower closing panel. MIG-weld spare lock panels to body lock panels, running a full seam. Spotweld lock panels to side members and closing panel. Plug weld lock panels to lower side members, using MIG- equipment.
6	Offer up corner sections to body and weld to body	Offer up corner sections to lock panels and closing panel. **Note: The lower spotweld flanges of the corner sections and the lock panels must be flush.** Spotweld corner sections to lock panels and plug weld in side member area, using MIG equipment.
7	Offer up upper closing section to body and spotweld to body	Offer up upper closing panel – using **test gauge 9121** for rear window aperture – to lower closing panel, attach with clamps and spotweld to body.
8	Offer up side panels to body and weld to body	Offer up spare side panels – along with **test gauge 9121** for rear widow aperture – to body side panels, upper closing panel and outer wheel housings. MIG-weld spare side panels to body side panels, running a butt full seam. Use clamps to attach side panels to upper closing panel and to wheel housings and spotweld them to body.
9	Offer up reinforcements to body and weld to body	Offer up reinforcement spare part – in conjunction with **test gauge 9121** for rear window aperture – to side panels and upper closing panel, locate with clamps and spotweld into place. MIG-weld reinforcement spare part to body reinforcement, running a full seam. MIG-weld reinforcement spare parts to seat belt mounts, running an intermittent full seam.

Printed in Germany – VII,1992

No.	Operation	Instructions
10	Offer up outer closing panels to body and weld to body	Offer up outer closing panels to side panels, corner sections, upper closing panel and lower closing panel. Plug weld outer closing panels to side panels, upper closing panel and lower closing panel, using MIG equipment. Spotweld closing panels to corner panels.
11	Offer up lower side panels to body and weld to body	Offer up lower side panels to side panels, wheel housings, closing panels and corner panels. Plug weld lower side panels to side panels, using MIG equipment. Spotweld lower side panels to wheel housings, lock panels and corner panels.

Printed in Germany – VII,1992

Dismantling and assembling front cover

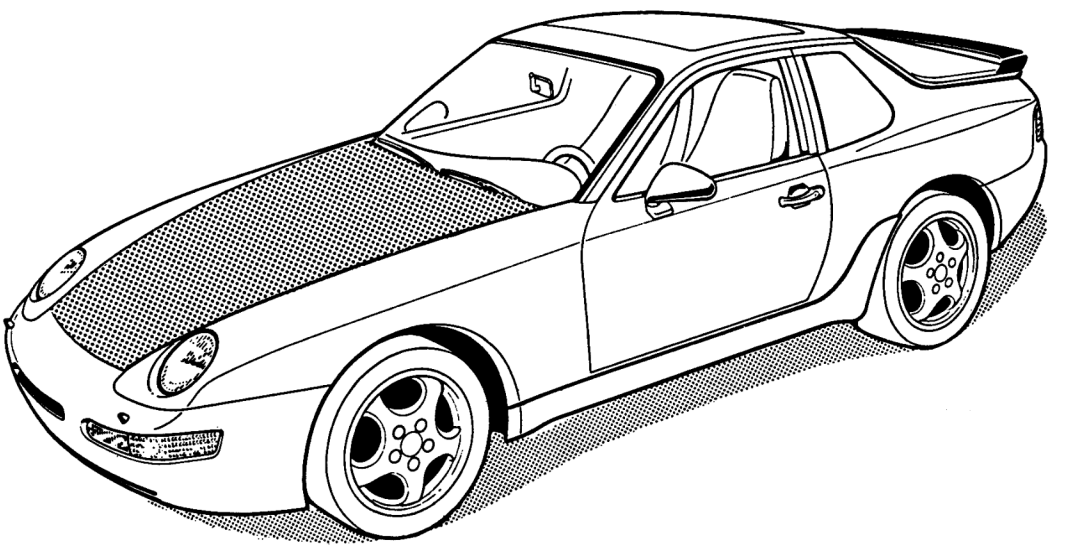

1402-55

Printed in Germany, VIII – 1993

Dismantling and assembling front cover

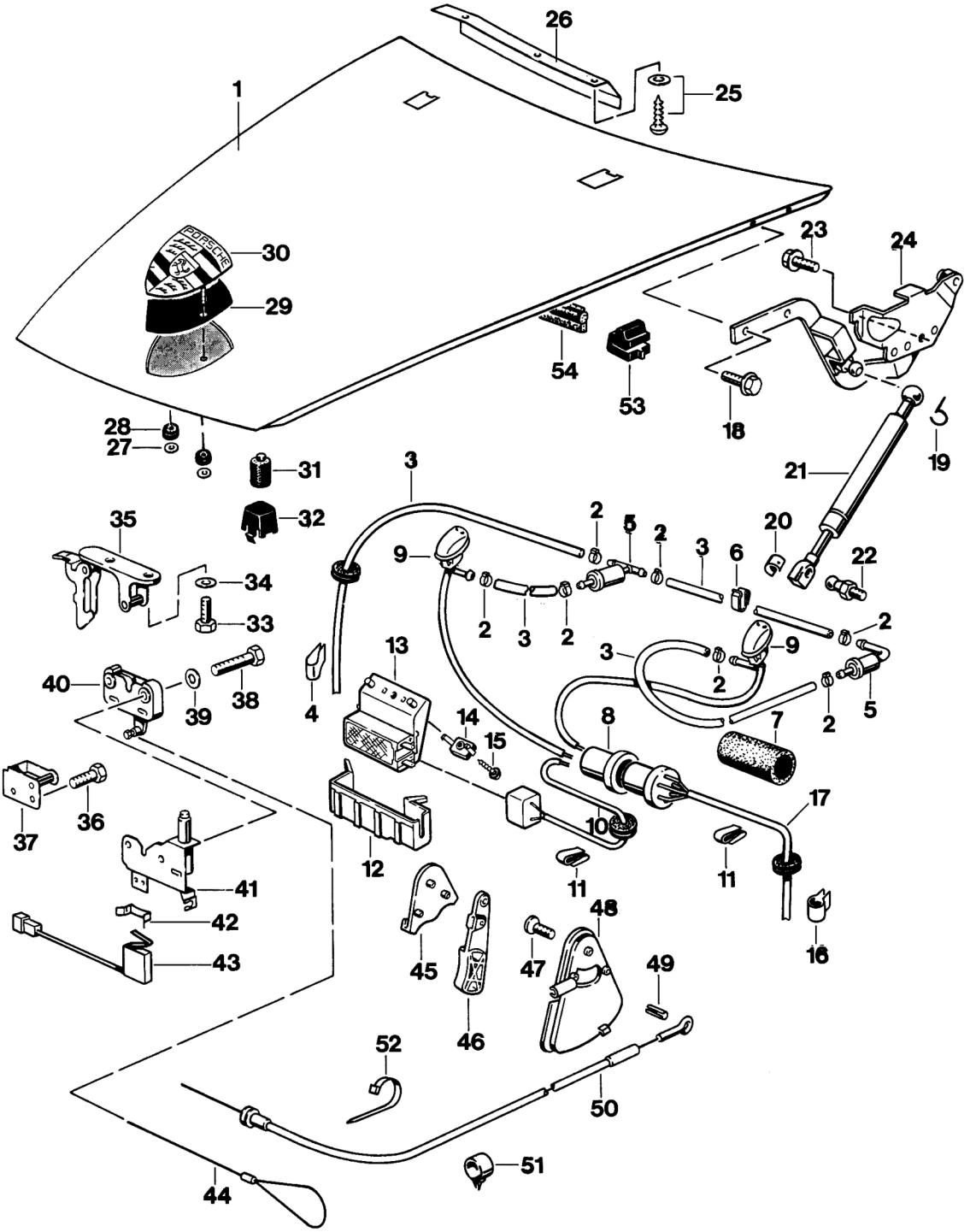

Printed in Germany, VIII – 1993

Dismantling and assembling front cover

No.	Designation	Qty.	Note: Removal	Installation
1	Cover	1		Adjust cover at hinges according to fender contours and front spoiler
2	Ear clamp 10/6	8	Remove	Replace
3	Hose	1	Separate from valve and pull out of cover frame complete with grommet	Push through cover frame complete with grommet, push onto valve and fit with ear clamp
4	Retaining clip	2	Unclip from cover hinge and separate from hose	Push onto hose and clip into cover hinge
5	Valve	2		Check, replace if required
6	Retaining clip	9	Unclip from cover frame and hose	Clip onto hose and cover frame
7	Damper	1	Push off the connector	Push onto the connector
8	Connector	1	Unclip wire	Clip wire into place according to wiring diagram
9	Heated windshield washer nozzle	2	Unclip from cover in upward direction	Clip into cover from above
10	Wiring harness	1	Remove from engine compartment light and pull out of cover frame complete with grommet	Route in cover frame and clip to engine compartment light
11	Retaining lip	9	Unclip from cover frame and wiring harness	Clip into wiring harness and cover frame
12	Protective cap	1	Pull off engine compartment light	Push onto engine compartment light
13	Engine compartment light	1		
14	Cap	1		

Printed in Germany, VIII – 1993

No.	Designation	Qty.	Note: Removal	Installation
15	Combination screw 4.2 x 13	1		
16	Retaining clip	2	Unclip from cover hinge and pull off the wiring harness	Push onto wiring harness and clip onto cover hinge
17	Wiring harness	1	Pull out of cover frame complete with grommet	Engage into cover frame complete with grommet
18	Hexagon head bolt M 8 x 18	4		
19	Retainer	2	Unclip from ball socket of gas strut and pull out	Engage into ball socket of gas strut and clip into place
20	Retainer	2	Push down on ball socket of gas strut	Push up on ball socket of gas strut
21	Gas strut	2	Unclip from ball pin	Clip back into ball pins
22	Ball pin	2		
23	Hexagon head bolts	4		
24	Cover hinge	2		
25	Combination screw 4.2 x 13	4		
26	Tab washer	1		
27	Tapping nut	2		Replace
28	Grommet	2		Replace
29	Backing	1		Check, replace if required
30	Ornament	1		
31	Rubber buffer	2	Remove from cover frame with a rotary motion	Turn back into cover frame and adjust in such a manner that the cover is flush with the fender contours and the front spoiler
32	Bracket	2	Unclip	Clip into place

Printed in Germany, VIII – 1993

No.	Designation	Qty.	Note: Removal	Installation
33	Hexagon head bolt M 6 x 12	2		
34	Washer A 6.4	2		
35	Cover lock upper section	1		Adjust to allow the catch to engage correctly in the support and to engage the riveted pin correctly into the cover lock
36	Hexagon head bolt M 6 x 16	2		
37	Support	1		Adjust to allow the catch to engage correctly
38	Hexagon head bolt M 6 x 35	2		
39	Washer A 6.4	2		
40	Cover lock lower section	1		Adjust to allow the riveted pin to engage correctly
41	Support	1		Fit with lower cover lock section to body
42	Spring clip	1	Unclip from seat	Clip back into seat
43	Bimetallic-element switch	1	Unclip spring clip and disconnect connector	Clip spring clip into place and reconnect connector
44	Emergency operation	1	Remove lateral front trim (carpet) in the cover and bearing cup area	Refit lateral front trim (carpet) in the cover and bearing cup area
45	Cover	1	Unclip from bearing cup in upward direction	Clip into bearing cup from above
46	Pull handle	1	Remove from bearing cup complete with bowden cable	Insert into bearing cup complete with bowden cable
47	Countersunk head bolt M 6 x 15	2		

Printed in Germany, VIII – 1993

No.	Designation	Qty.	Note: Removal	Installation
48	Bearing cup	1	Unscrew countersunk head bolts and unclip from below	Clip into body from below and tighten with countersunk head bolts
49	Roll pin 4 x 12	1	Drive out	Replace
50	Bowden cable	1	Drive out roll pin, unclip clamp and bracket and open tie-wrap. Undo clamping screw from cover lock. Unclip from support	Insert roll pin, clip stay, retainer clip and bracket back into place. Clip into support. Tighten clamping screw on cover lock
51	Retainer clip	1	Unclip	Clip into place (replace if required)
52	Tie-wrap	1	Open	Replace, close
53	Filler pad	2	Remove	Bond into place
54	Gasket	1	Lift off in upward direction	Push into place

Printed in Germany, VIII – 1993

Removing and fitting door outer handle

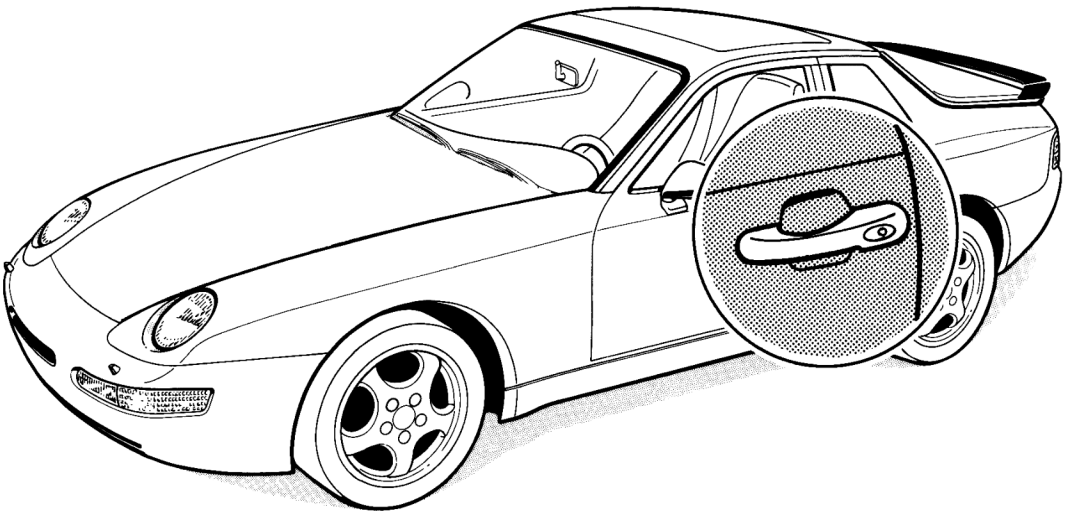

807 - 57

Printed in Germany – II, 1991

Removing and fitting door outer handle

Removing the door outer handle

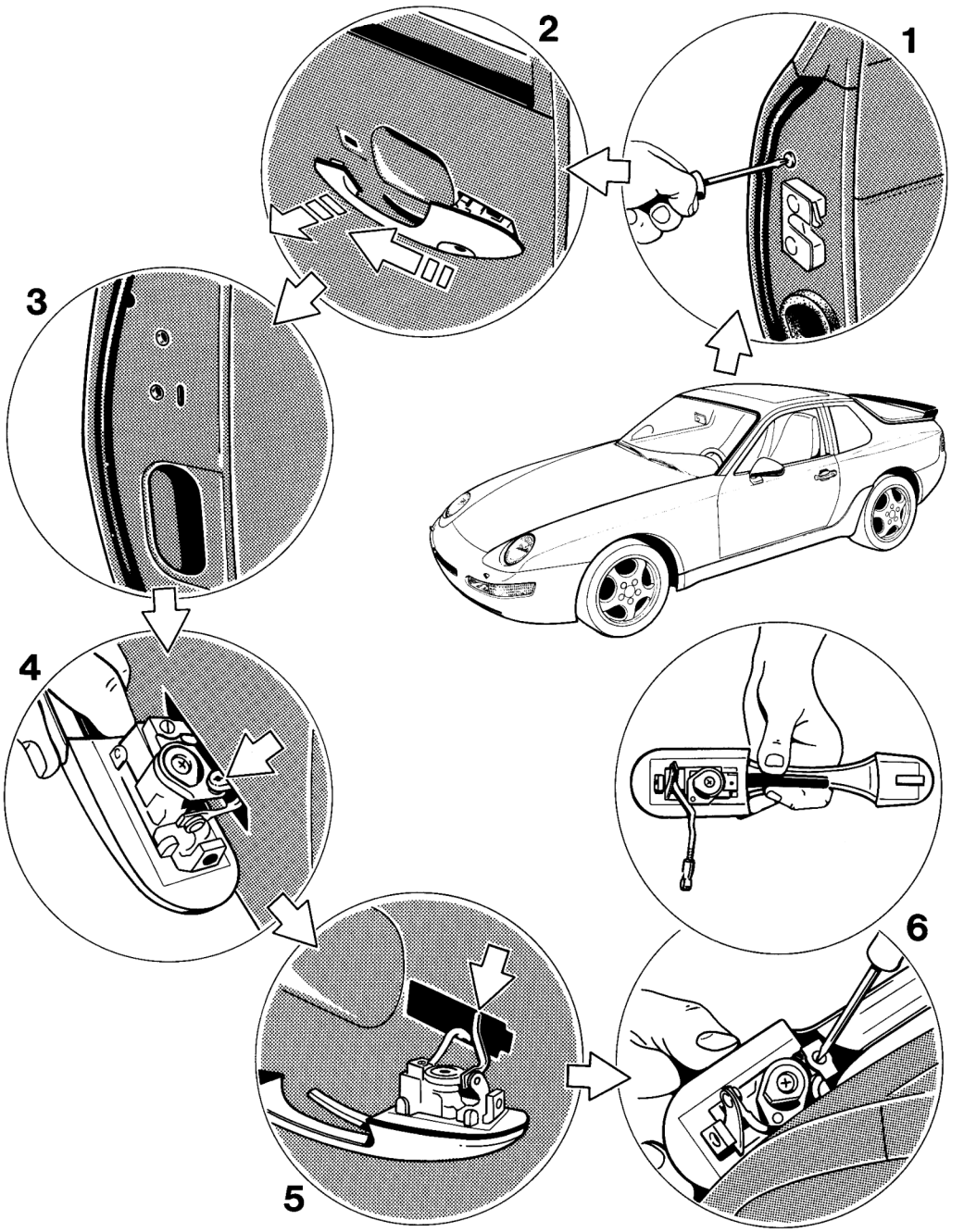

Printed in Germany – II, 1991

Removing and fitting door outer handle

Removing the door outer handle

No.	Operation	Instructions
1	Release mounting screw of door outer handle	Unscrew mounting screw of door outer handle from door frame.
2	Disengage door outer handle from door	Push door outer handle forward and take out of door hole pattern.
3	Release mounting of door lock outer section and remove plastic grommet for forced-air venting	Undo socket hex head screws for mounting of door lock outer section and pull plastic grommet for forced-air venting off the door.
4	Unclip intermediate section from door outer handle	
5	Unclip deflection lever at door lock inner section	Unclip return lever at door lock inner section (Deflection lever is accessible across door aperture for forced-air vent).
6	Undo microswitch at door outer handle	Screw out wire retainer mounting screw and unclip microswitch from door outer handle.

Printed in Germany – II, 1991

Removing and fitting door outer handle

Fitting the door outer handle

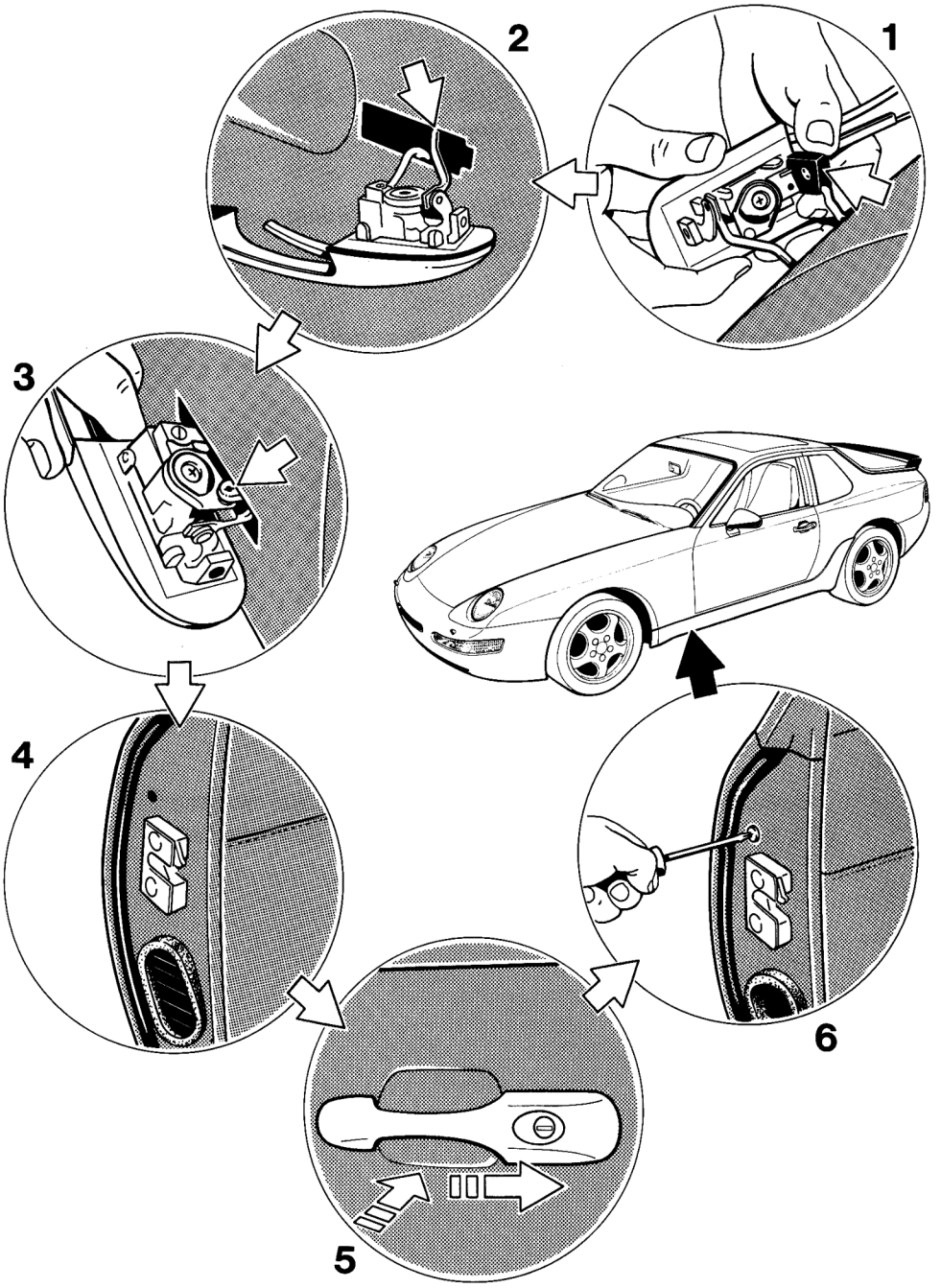

Printed in Germany – II, 1991

Removing and fitting door outer handle

Fitting the door outer handle

No.	Operation	Instructions
1	Screw microswitch to door outer handle	Clip microswitch to door outer handle and screw wire retainer screw into place.
2	Clip deflection lever to door lock inner section	Clip return lever to door lock inner section (Deflection lever is acccessible across the door aperture for the forced-air vent).
3	Clip intermediate section to door outer section	
4	Fit door lock outer section and insert plastic grommet for forced-air vent	Insert door lock outer section and bolt in place with socket head bolts. Insert plastic grommet for forced-air vent into door aperture.
5	Engage door outer handle into door	Insert door outer handle into door hole pattern and push to the rear.
6	Fit mounting screw of door outer handle	Fit mounting screw of door outer handle.

Printed in Germany – II, 1991

Dismantling and assembling door outer handle

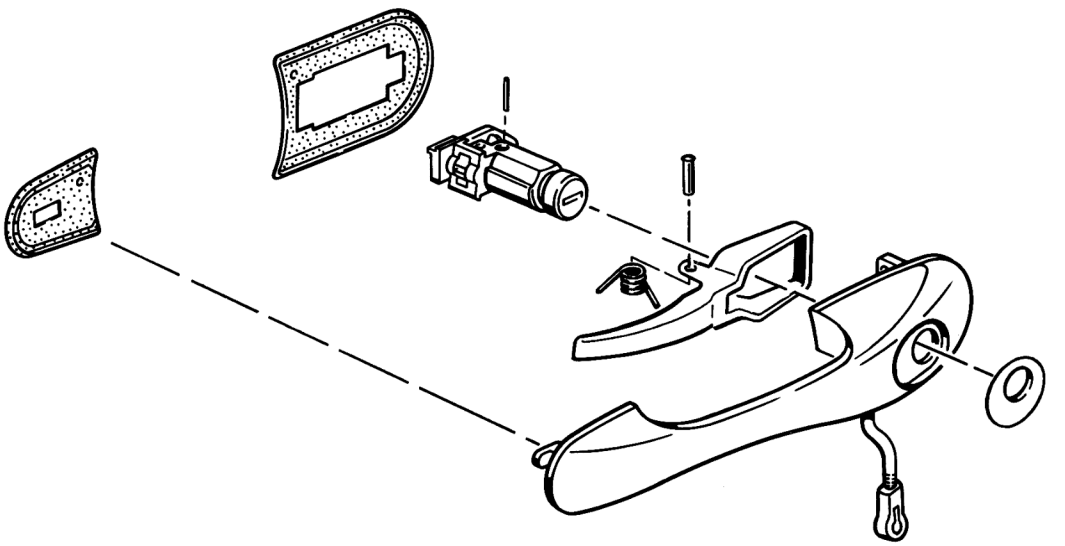

942 - 57

Printed in Germany – III, 1991

Dismantling and assembling door outer handle

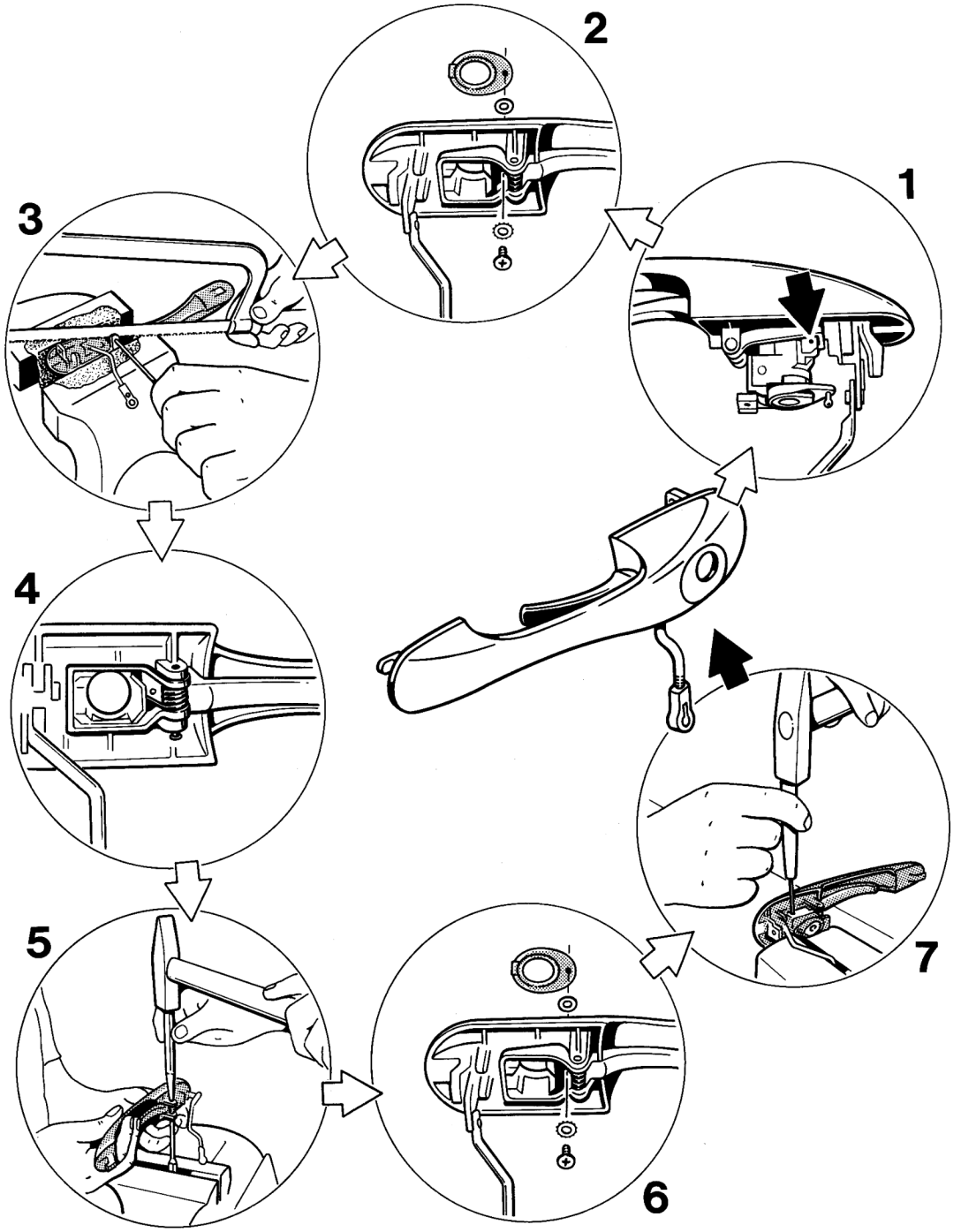

Printed in Germany – III, 1991

Dismantling and assembling door outer handle

Dismantling door outer handle:

No.	Operation	Instructions
1	Remove lock barrel	To separate the lock barrel from the door outer handle, drive out the lock pin using a drift.
2	Remove escutcheon	Undo bolts and lift off escutcheon.
3	Remove operating lever	Cut rivet connecting door outer handle and operating lever using a hacksaw. Pull out both rivet sections, pull operating lever and tensioning spring out of the door outer handle. *Note:* *When sawing off the rivet, lock the rivet stud to keep it from turning.*

Assembling the door outer handle:

No.	Operation	Instructions
4	Fit operating lever	Insert operating lever, tensioning spring and rivet stud into the door outer handle. *Note:* *Grease the operating lever (in the pivot area) and the rivet stud before inserting them into the door outer handle.*
5	Reestablish rivet connection	Position drift in a vise. Place preassembled door outer handle with rivet stud area (flat side of rivet stud) onto the drift. To rivet door outer handle to the operating lever, enlarge rivet stud using a center punch. *Note:* *Enlarge rivet stud head only enough to prevent the rivet stud from being pressed out of its assembled position.*
6	Fit escutcheon	Place escutcheon into door outer handle and screw in place.
7	Fit lock barrel	Place lock barrel into door outer handle and lock using the roll pin.

Printed in Germany – III, 1991

Removing and installing convertible top

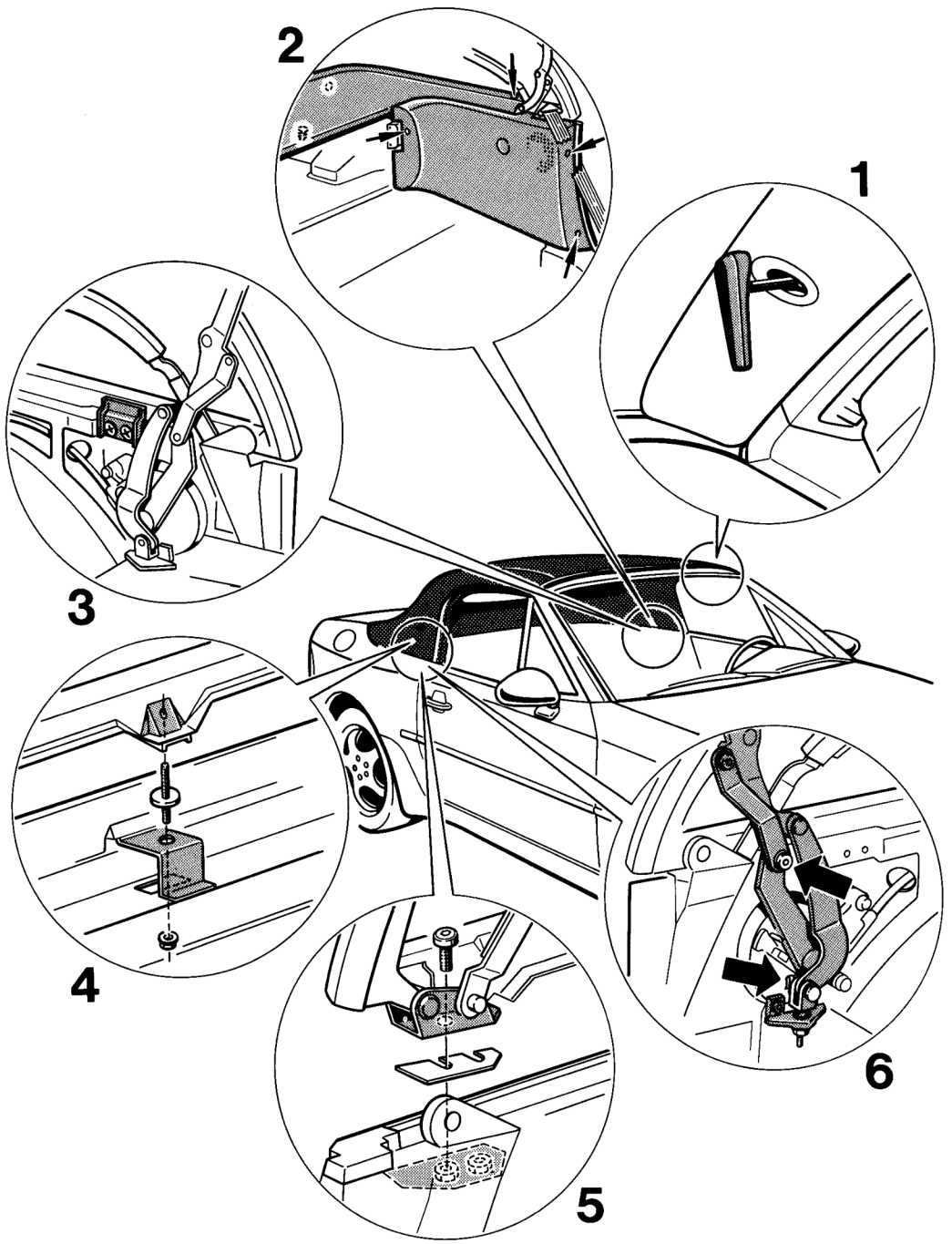

Printed in Germany – II, 1991

Removing and installing folding top

Removing folding top

No.	Task	Instructions
1	Release folding top	Release front of folding top left and right using special handles inside the vehicle and lift off and upwards.
	Fold seat backrests forwards	Release both seat backrests and fold forwards.
2	Remove rear side lining and rear lining	Pull off door gasket at B-pillar from spot welding flange and detach adhesive fastening of rear side lining. Undo screw fastening of rear side lining and take out lining. Undo right and left screw fastenings of rear lining, unclip 8 press studs from hat shelf and remove rear lining.
3	Undo fastening screws of folding top retaining bracket from rear inner side elements	Undo two screw fastenings of rear inner side elements on both left and right.
	Detach luggage compartment lining in area of hat shelf	From luggage compartment side, detach adhesive fastening of luggage compartment lining in area of hat shelf.
4	Undo fastening nuts of folding top retaining bracket in area of luggage compartment	From the luggage compartment side, undo 4 fastening nuts of folding top retaining bracket.
5	Undo screw fastenings of folding top bearings	Raise rear of folding top and undo screw fastenings of both folding top bearings.
6	Undo plug-in fastenings of articulated forks to support struts 1 and screw fastenings of support struts 2 to guide levers	Disengage securing plate from the connecting bolt of articulated fork / support strut 1, press out connecting bolt and detach support strut 1 from articulated fork. Unscrew fastening bolt of support strut 2 from fastening point on guide lever.
	Lift folding top off vehicle	

Printed in Germany – II,1991

Removing and installing folding top

Installing folding top

No.	Task	Instructions
	Place folding top on vehicle	
	Screw together support struts 2 to guide levers and plug-in fastenings of articulated forks to support struts 1	2 microencapsulated set screws M 8 x 20 2 securing plates 2 connecting bolts **Note** The microencapsulated set screws must be replaced by new ones!
	Restore screw fastenings of folding top bearings	4 fillister head screws with hexagonal socket heads M 8 x 20
	Bolt on folding top retaining brackets in area of luggage compartment	4 nuts M 6
	Bolt folding top retaining brackets to rear inner side elements	4 sheet metal screws 4.2 x 16
	Fit rear lining	8 Clips 2 sheet metal screws 3.5 x 16
	Fit rear side linings	6 sheet metal screws 3.5 x 16 Dekalin adhesive
	Fit door gasket onto spot welding flange	
	Adjust folding top	Adjust folding top in area of luggage compartment by means of adjusting screws on folding top retaining bracket so it is parallel to body contours
	Bolt folding top retaining bracket into place	Bolt folding top retaining bracket into place in area of luggage compartment
	Glue luggage compartment lining into place	Dekalin adhesive

Printed in Germany – II,1991

Removing and fitting front spoiler and bumper

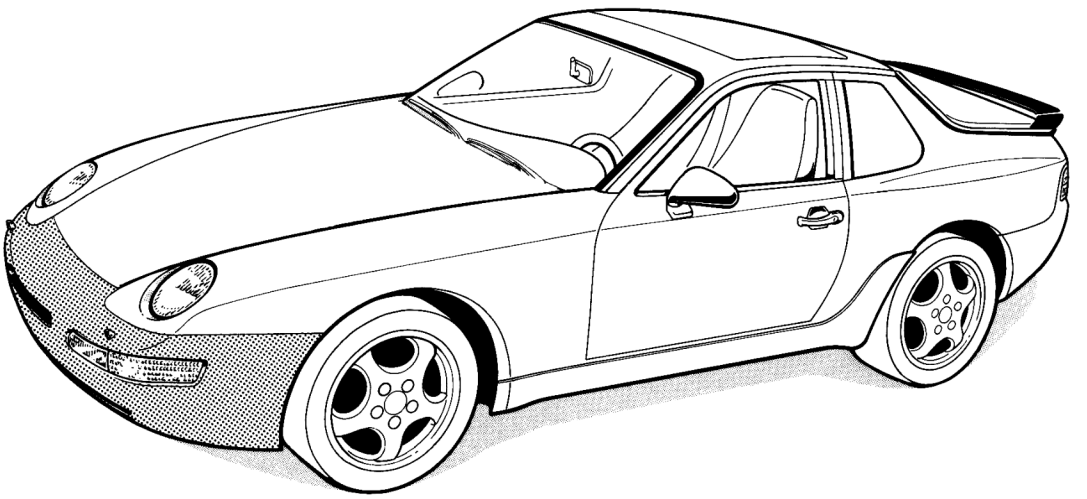

Printed in Germany – II, 1991

Removing and fitting front spoiler and bumper

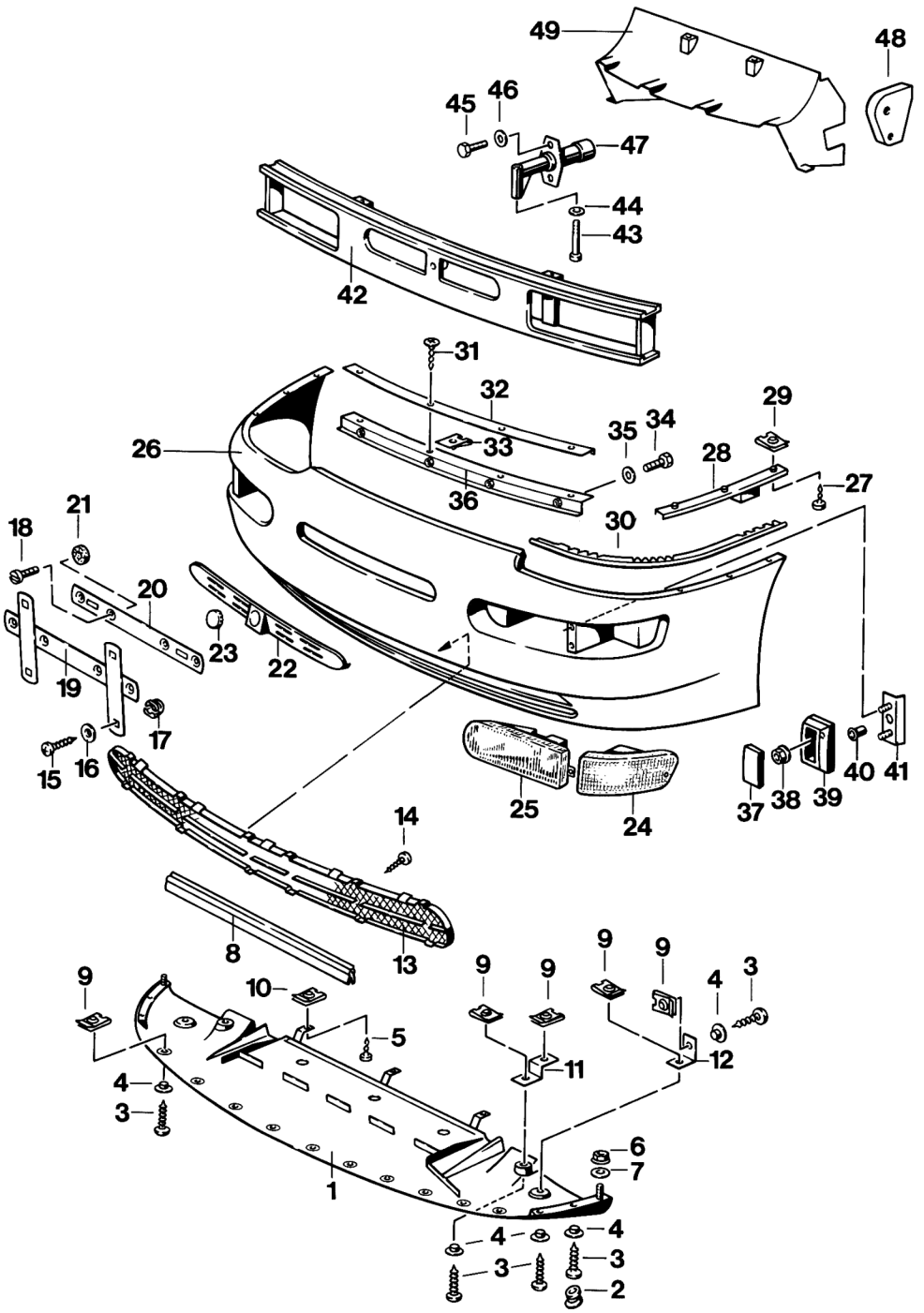

Printed in Germany – II, 1991

Removing and fitting front spoiler and bumper

No.	Designation	Qty.	Note: Removal	Installation
1	Lower spoiler	1		
2	Plug	2		
3	Sheetmetal screw B 4.2 x 16	19		
4	Spacer	19		
5	Sheetmeal screw/washer assembly B 4.8 x 16	3		
6	Lock nut M 5	2		Replace
7	Washer B 5.3	2		
8	Piping	1		Check, replace if required
9	Sheetmetal nut B 4.2	19		Adjust to center of hole
10	Sheetmetal nut B 4.8	3		Adjust to center of hole
11	Bracket	2		
12	Bracket	2		
13	Air inlet grille	1		
14	Oval-head screw	18		
15	Oval-head sheetmetal screw B 4.2 X 9.5	4		
16	Washer	4		
17	Plug-in nut	4		Check, replace if required
18	Sheetmetal screw B 4.8 x 25	2		
19	Bracket	1		

Printed in Germany – II, 1991

No.	Designation	Qty.	Note: Removal	Installation
20	Bracket	1		
21	Spacer	2		
22	Cover shield	1	Clip out of front spoiler	Clip into front spoiler
23	Plug	1	Clip out of cover shield	Clip into cover shield
24	Turn signal	2	Disconnect electrical connector	Insert into front spoiler and reconnect electrical connector
25	Auxiliary headlights	2	Disconnect electrical connector	Insert into front spoiler and reconnect electrical connector
26	Front spoiler	1		
27	Sheetmetal screw/washer assembly B 4.8 x 19	6		
28	Retainer strip	2		
29	Sheetmetal nut B 4.8	6		Adjust to center of hole
30	Piping	2		Check, replace if required
31	Sheetmetal screw B 4.8 x 22	4		
32	Cover rail	1		
33	Sheetmetal nut B 4.8	4		Check, replace if required
34	Hexagon head bolt M 6 x 16	4		
35	Washer B 6.4	4		
36	Retainer strip	1		
37	Cap	2		

Printed in Germany – II, 1991

No.	Designation	Qty.	Note: Removal	Note: Installation
38	Hexagon nut M 5	4		
39	Protective web	2		
40	Pop-rivet nut	2		
41	Reinforcement	2		
42	Bumper	1		
43	Cylinder bolt M 12 x 110	2		
44	Washer A 13	2		
45	Hexagon head bolt M 8 x 30	4		
46	Washer A 4.8	4		
47	Impact absorber / impact pipe	2		Before fitting, apply sealing compound (e.g. adhesive sealer, part no. 999.915.400.40) in a continuous bead to seal the mounting flange
48	Grommet	2		
49	Airflow ducting	2		

Printed in Germany – II, 1991

Removing and fitting rear spoiler and bumper

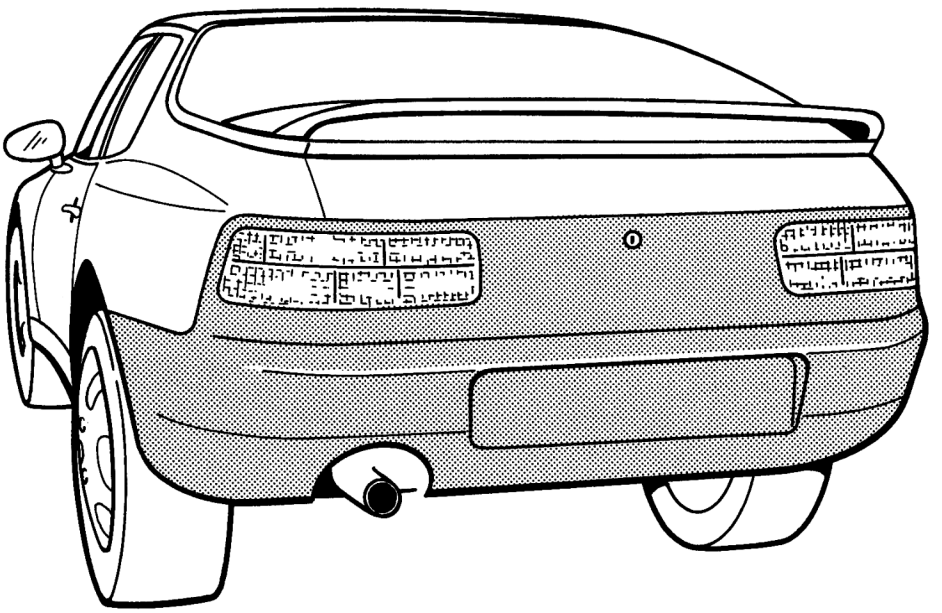

822 - 63

Printed in Germany – II, 1991

Removing and fitting rear spoiler and bumper

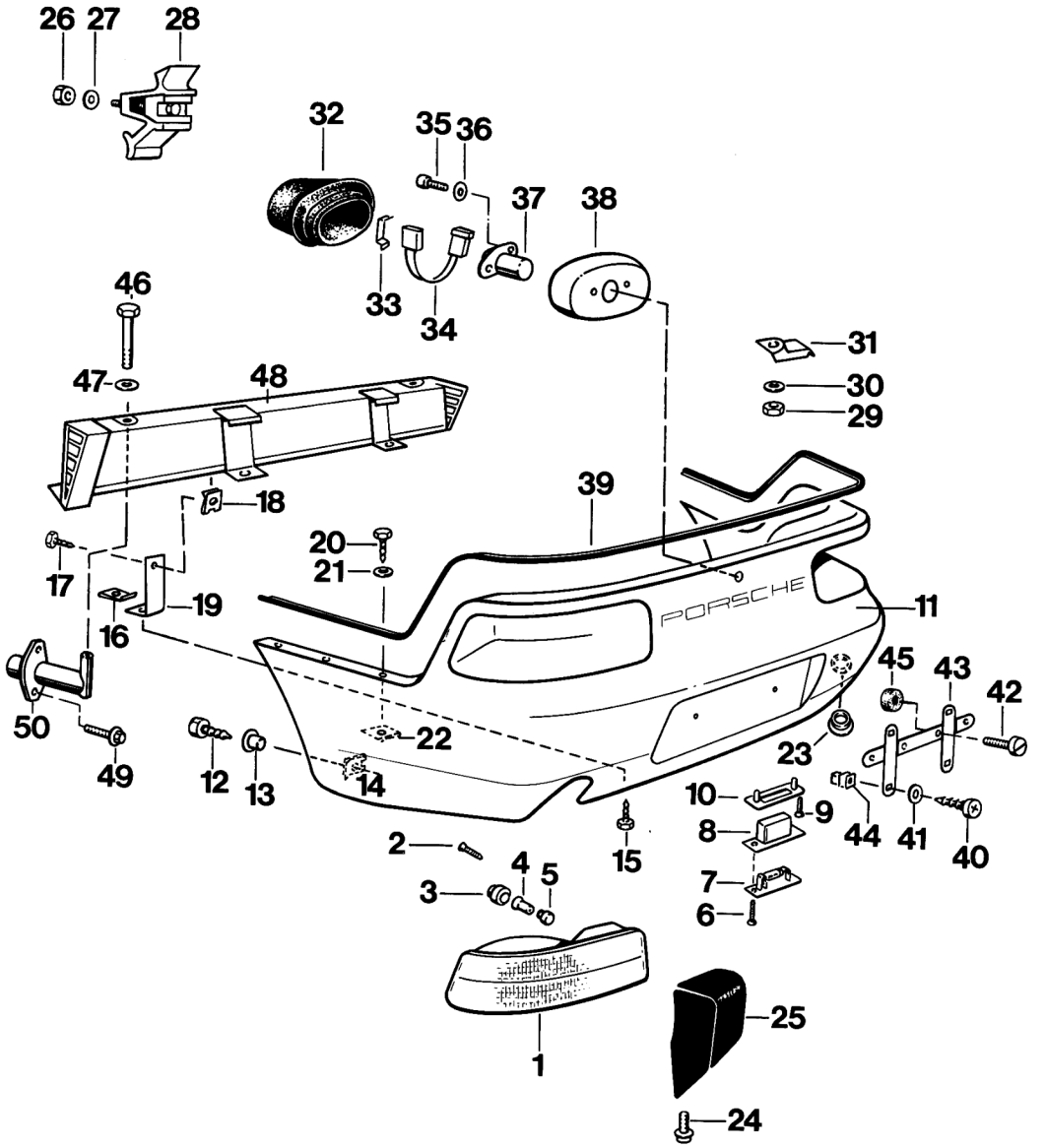

819 - 63

Printed in Germany – II, 1991

Removing and fitting rear spoiler and bumper

No.	Designation	Qty.	Note: Removal	Installation
1	Taillight assembly	2	Disconnect electrical connector	Insert into rear spoiler and reconnect electrical connector
2	Oval-head screw 5 x 12	2	Disconnect wiring harness	Fit wiring harness
3	Cap	2		Check, replace if required
4	Plastic nut M 5	2		Check, replace if required
5	Sealing washer	2		Check, replace if required
6	Sheetmetal screw 4 x 16	4		
7	Number plate light	2	Disconnect electrical connector	Insert into cap and reconnect electrical connector
8	Cap	2		Insert into mounting plate
9	Sheetmetal screw 3 x 10	4		
10	Mounting plate	2		Insert into rear spoiler
11	Rear spoiler	1		
12	Sheetmetal screw B 4.8 x 16	2		
13	Spacer	2		
14	Sheetmetal screw B 4.8	2		Adjust to center of hole

Printed in Germany – II, 1991

No.	Designation	Qty.	Note: Removal	Note: installation
15	Sheetmetal screw/washer assembly B 4.8 x 16 Z 2	2		
16	Sheetmetal nut B 4.8	2		Adjust to center of hole
17	Sheetmetal screw/washer assembly B 4.8 x 16 Z 2	2		
18	Sheetmetal nut B 4.8	2		Adjust to center of hole
19	Rear support	2		
20	Screw/washer assembly B Z 4.8 x 19	10		
21	Washer 5.3 x 18	10		
22	Sheetmetal nut B 4.8	10		Adjust to center of hole
23	Cap	1		
24	Screw/washer assembly M 8 x 20	2		
25	Buffer pad	2		
26	Lock nut V M 5	4		Replace
27	Washer A 5.3	4		
28	Clamping piece	4		
29	Lock nut V M 5	2		Replace
30	Washer A 5.3	2		
31	Clamping piece	2		
32	Boot	1		Check, replace if required

Printed in Germany – II, 1991

No.	Designation	Qty.	Note: Removal	Installation
33	Clip	1		Check, replace if required
34	Microswitch	1	Disconnect electrical connector	Reconnect electrical connector
35	Pan-head screw M 5 x 16	2		
36	Washer A 5.3	2		
37	Lock barrel	1		Insert in receptacle
38	Receptacle	1		Insert in rear spoiler
39	Piping	1		Check, replace if required
40	Oval-head sheetmetal screw B Z 4.2 x 9.5	4		
41	Washer A 4.3	4		
42	Sheetmetal screw/washer assembly B 4.8 x 13 Z 1	2		
43	Bracket	1		
44	Plug-in nut	4		Check, replace if required
45	Rubber washer	2		
46	Hexagon head bolt M 12 x 110	2		
47	Washer A 13	2		
48	Bumper (support)	1		
49	Screw/washer assembly M 8 x 20	4		
50	Impact pipe / impact absorber	2		

Printed in Germany – II, 1991

Bonding the interior rearview mirror in place

The following materials are required for bonding of the complete interior rearview mirror:

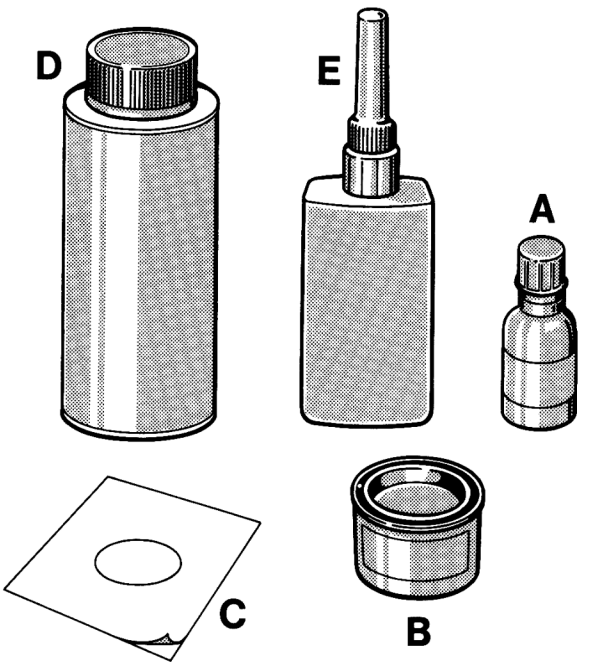

752 - 64

A = **Cleaning solution** (000.043.157.00)*

B = **Primer** (000.043.158.00)*

C = **Cover sheet** (000.043.177.00)*

D = **Activator** (000.043.052.00)*

E = **Adhesive** (000.043.051.00)*

* Porsche part no.

Printed in Germany – II, 1991

Bonding the interior rearview mirror in place

Bonding the fully assembled interior mirror to the windshield

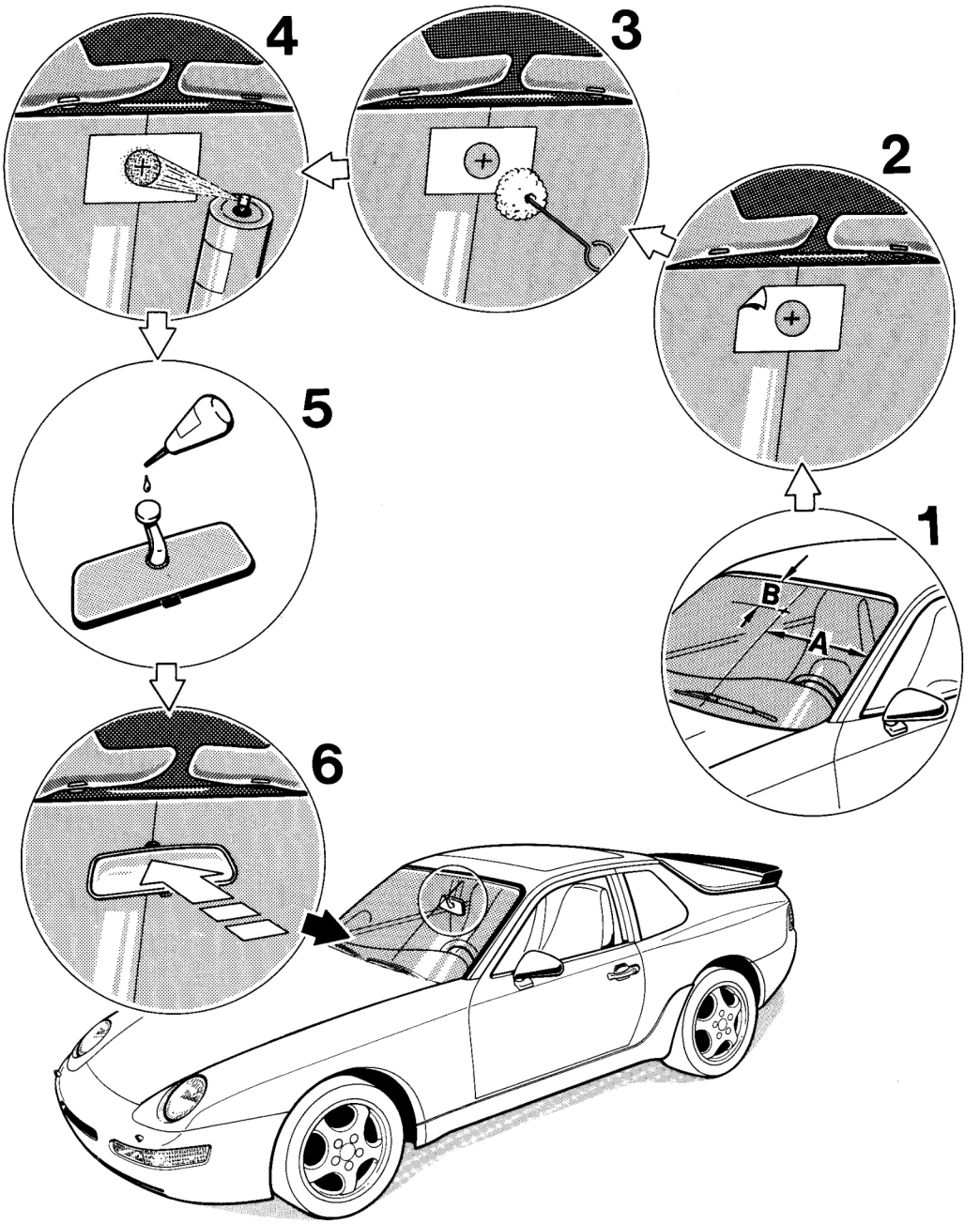

Printed in Germany – II, 1991

Bonding the interior rearview mirror in place

Bonding the fully assembled interior mirror to the windshield

No.	Operation	Instructions
1	Mark position of interior rearview mirror	Mark position of adhesive plate on outside of windshield. **Cabriolet:** Dimension A = 623 mm Dimension B = 84 mm **Coupé :** Dimension A = 623 mm Dimension B = 142 mm
	Remove adhesive residue	Remove adhesive residue from windshield mechanically using a scraper. Remove adhesive residue from bonding plate of rearview mirror mechanically using a scraper.
	Roughen bonding plate of rearview mirror	Roughen bonding plate of rearview mirror mechanically using sanding paper.
	Clean bonding plate of rearview mirror	Clean bonding plate of rearview mirror using **cleaning solution** (A).
	Clean bonding area of windshield	Clean bonding area of windshield using **cleaning solution** (A).
2	Mask off bonding area of windshield	Mask off bonding area of windshield using **primer template** (cover sheet C). The position mark of the interior rearview mirror must be visible in the middle of the primer template.
3	Prime bonding area of windshield	Apply a thin coat of **primer** (B) to the masked bonding area of the windshield. **Caution: Allow a flash-off time of 15 to 20 minutes!**
4	Activate bonding area of windshield	Spray **activator** (D) onto bonding area of the windshield. **Caution: Allow a flash-off time of 2 minutes!**

Printed in Germany – II, 1991

No.	Operation	Instructions
	Remove primer template	
5	Apply adhesive to bonding plate	Apply a drop of **adhesive** (E) to the bonding plate of the rearview mirror.
6	Bond rearview mirror in place	Press bonding plate of rearview mirror against primered and activated windshield area. **Note: Press mirror in place for approx. 40 – 50 sec.!**

Note:

Bonding strength
60 % after 1 hour
100 % after 24 hours

Printed in Germany – II, 1991

Removing and installing windshield — 2-pack adhesive

The following tools and materials are required for removal and installation of the windshield using 2-pack adhesive:

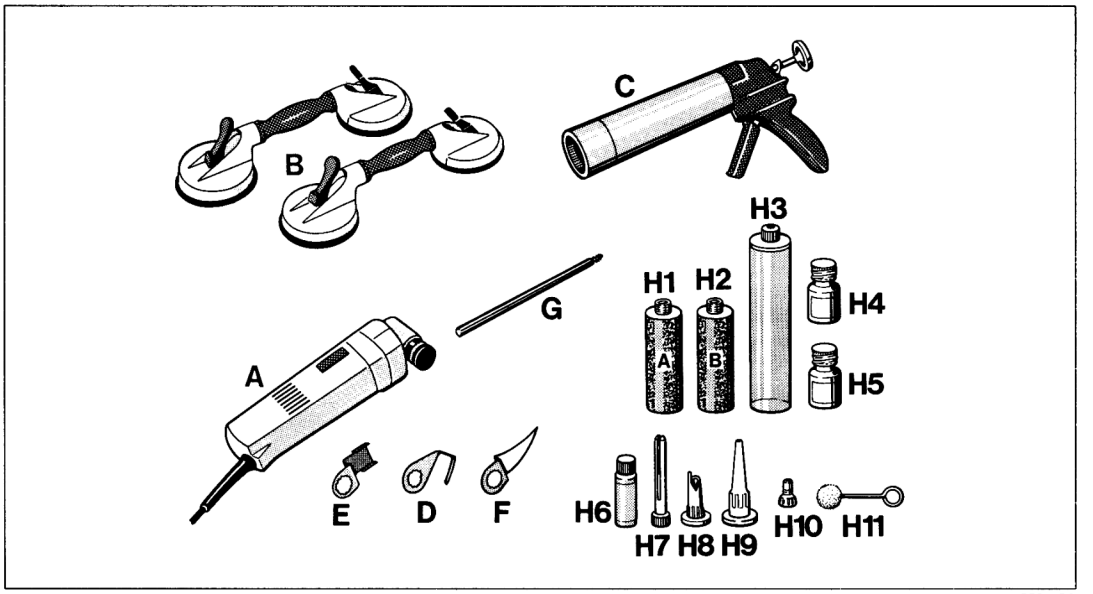

928 - 64

A	Cutter	VAG 1561	e.g. VW Werk AG
B	Twin-cup suction puller	VAG 1344	Service equipment supply
C	Bonding gun	VAG 1628	
D	Cutting knife, U-shape	639.031.140.14	e.g. C & E FEIN GmbH & Co.
E	Flashing knife	639.031.130.22	P.O. Box 172
F	Cutting knife, cranked	639.030.720.17	7000 Stuttgart 1
G	Mixing rod 9528	000.721.952.80	Porsche Parts Department
H	Adhesive set	999.915.509.40	

Contents of adhesive set:

H 1 = Cartridge component A
H 2 = Cartridge component B
H 3 = Mixing cartridge
H 4 = Primer
H 5 = Activator
H 6 = Cleaning solution
H 7 = Injector nozzle
H 8 = Application nozzle
H 9 = Application nozzle
H 10 = Filling nozzle
H 11 = Touch-in tool

Printed in Germany – VII, 1992

Removing and installing windshield – 2-pack adhesive

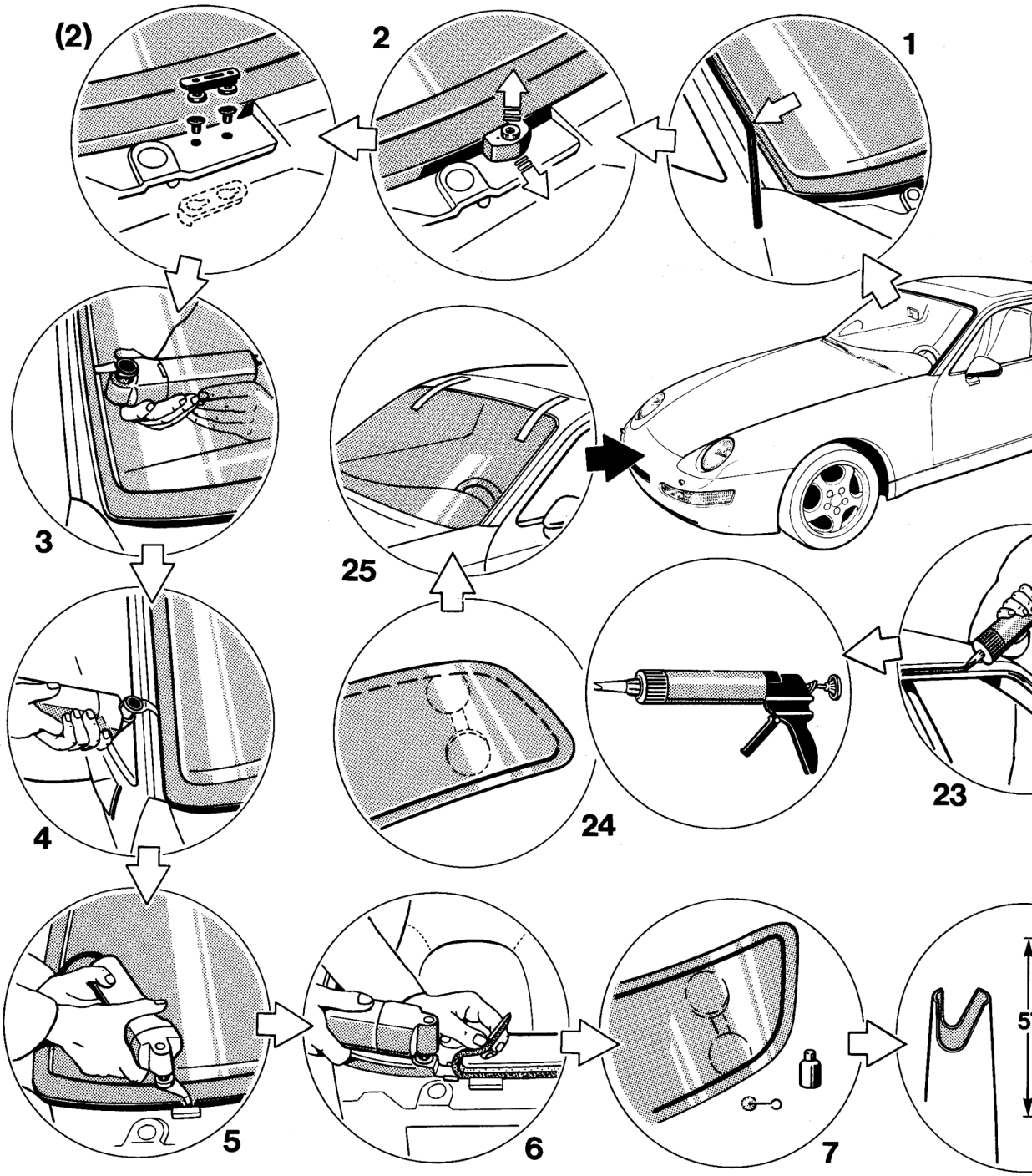

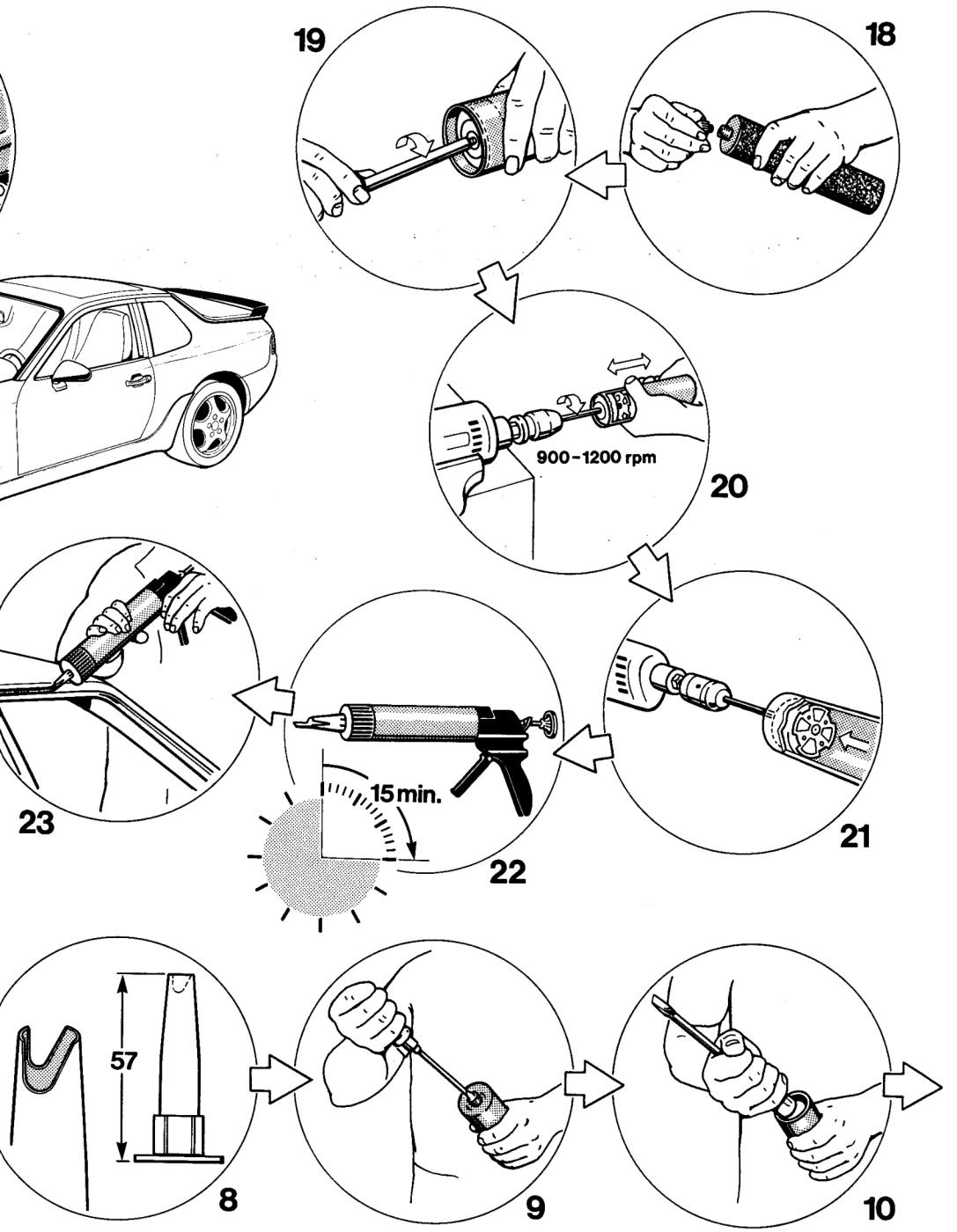

Removing and installing windshield – 2-pack adhesive

Printed in Germany – III, 1991

Removing and installing windshield, – 2-pack adhesive

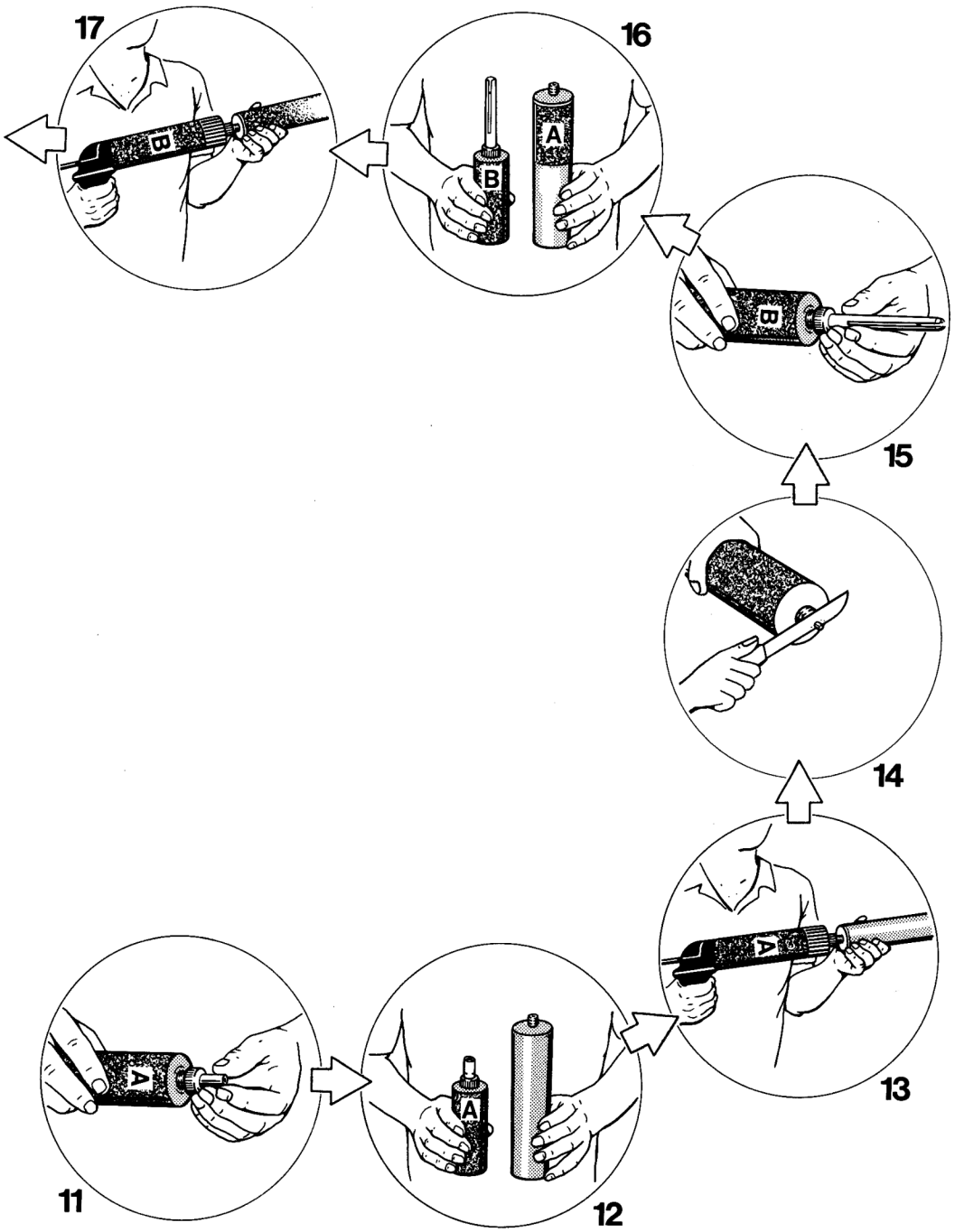

Printed in Germany – III, 1991

Removing and installing windshield, – 2-pack adhesive

Removing the windshield

No.	Operation	Instructions
	Remove interior in the windshield area	Remove sun visors, interior rearview mirror, front roof rail lining and A-pillar lining.
	Remove exterior parts in the windshield area	Remove front cover and windshield wipers. **Convertible only:** Remove cover molding for antenna cable and disconnect windshield antenna connector.
1	Pull off cover molding	Detach and pull off windshield cover molding.
2	Remove spacer blocks	**Vehicles with spacer blocks equipment only:** Undo eccentrics and lift off, making sure the notch in the eccentric points towards the mark on the spacer block. Push out spacer blocks in forward direction.
(2)	**Note:**	The spacer blocks are no longer required for fitting of the windshield, i.e. fitting the spacer blocks **may** be omitted when installing the windshield. For this purpose, undo the fittings, remove the spacer block supports and plug the bores in the cowl panel.
	Lay protective cover over instrument panel	Cover instrument panel to avoid staining or damaging the panel.
	Open door windows	**Caution: The door windows must not be closed until the adhesive has cured completely.**

Printed in Germany – III, 1991

No.	Operation	Instructions
3	Cut out windshield in roof rail and A-pillar area	Insert cranked knife (F) into cutter (A). Set vibration regulator to stage 3. Cut bonding between windshield and body from inside (passenger compartment) along A-pillars and roof rail.
4	Cut off protruding adhesive	Cut off protruding adhesive from outside directly along edge of windshield.
5	Cut out windshield in instrument panel area	Insert U-shaped cutting knife (D) into cutter (A). Insert cutting knife in such a manner that the cutting edge is parallel to the cutter. Set vibration regulator to stage 6. Cut through remaining bonding of the windshield from outside along the instrument panel.
	Take out windshield	
6	Remove adhesive from body	Insert flashing knife (E) into cutter (A) and remove adhesive only to the extent that the remaining adhesive covers the whole area in a uniform manner.
	Clean windshield aperture of body	Clean windshield aperture of body thoroughly using cleaning solution (H6). **Caution: Make sure no cleaning solution residue remains on the body.**
	Apply primer to damaged areas of body	Use primer (H4) to coat damaged paintwork areas in non-visible section of windshield aperture.
7	Activate bonding section of windshield	Apply activator (H5) to bonding section of pre-coated windshield. **Caution: Allow a flash-off time of at least 10 minutes!**

Printed in Germany – VII, 1992

Preparing the adhesive cartridge for application of adhesive

No.	Operation	Instructions
8	Prepare application nozzle	Prepare application nozzle (H9) for application of adhesive to the windshield by cutting according to drawing.
9	Open nozzle fitting of cartridge containing component A	Use a screwdriver to pierce the diaphragm in the nozzle fitting of the cartridge containing component A (H1).
10	Open flanged cover of cartridge containingcomponent A	Use the screwdriver handle to pierce the flanged cover at the end of the cartridge containing component A (H1).
11	Screw filling nozzle onto cartridge containing component A	Screw filling nozzle (H1) onto cartridge containing component A (H10).
12	Place cartridge containing component A into bonding gun	Place cartridge containing component A (H1) into bonding gun (C). Remove screw-on cap from mixing cartridge (H3).
13	Press component A into mixing cartridge	Insert filling nozzle (H9) of cartridge containing component A (H1) into mixing cartridge. Press component A into mixing cartridge (H3) using the bonding gun.
14	Open screw-on fitting of cartridge containing component B	Use a knife to cut off the tip of the nozzle fitting of the cartridge containing component B (H2).
15	Screw injector nozzle onto cartridge cont. component B	Screw injector nozzle (H7) onto cartridge containing component B (H2).
16	Place cartridge containing component B into bonding gun	Place cartridge containing component B (H2) into bonding gun (C).

Printed in Germany – VII, 1992

No.	Operation	Instructions
17	Press component B into mixing cartridge containing component A	Introduce injector nozzle (H7) of cartridge containing component B (H2) into mixing cartridge (H3). Use the bonding gun (C) to press component B (H2) into mixing cartridge (H3) containing component A.
18	Close mixing cartridge	Pull injector nozzle (H7) out of mixing cartridge (H3) and close mixing cartridge with screw-on cap.
19	Screw mixing rod into mixing cartridge	Screw mixing rod (G) manually into internal thread of mixing disc in the mixing cartridge (H3). Clamp other end of mixing rod into a drill chuck. Fit the drill into a suitable clamping device.
20	Mix component A and component B	Switch on drill (900 to 1200 rpm) and rotate mixing cartridge 25 times from stop to stop. Perform all 25 double strokes fairly rapidly.
21	Engage mixing disc into piston	Pull back mixing cartridge until a rattling sensation is felt. Switch off drill and screw mixing rod out of mixing cartridge. The mixing disc will then engage into the piston of the mixing cartridge.
22	Place mixing cartridge into bonding gun	Insert mixing cartridge with mixed 2-pack windshield adhesive into bonding gun. Screw application nozzle (H8) onto mixing cartridge.

Caution: Open time is 15 minutes!

Open time is the time available for application of the adhesive and for installing the windshield into the aperture in the body.

Printed in Germany – III, 1991

Installing the windshield

No.	Operation	Instructions
23	Apply adhesive to the bodywork	Apply a trapezoidal continuous bead of 2-pack adhesive to the body flange using the bonding gun. **Note: Do not apply adhesive to the cowl panel area (only across the width of the front cover) of the body flange.**
	Change application nozzle	Screw application nozzle H8 off the mixing cartridge and screw **application nozzle H9** onto the mixing cartridge.
24	Apply adhesive to the windshield	Using the bonding gun, apply 2-pack adhesive to the bonding section of the windshield in the cowl panel area (including both lower windshield radii).
	Note:	**When applying the adhesive, make sure the adhesive overlaps in the area of the lower windshield radii.**
	Insert windshield into body aperture	Insert windshield into windshield aperture and press in place. Move windshield until the gaps between the A-pillars and the windshield are parallel. In the roof area, the gap between windshield and body is 2 mm.
25	Locate windshield	Attach two strips of adhesive tape to locate the windshield and to keep it from sagging. Note: The locating strips may be removed after 1.5 to 2 hours.

Printed in Germany – III, 1991

No.	Operation	Instructions
	Clean visible areas	Remove adhesive that has squeezed out immediately and clean the visible areas affected using cleaning solution (H5).
	Refit exterior parts	Press windshield cover molding into retainer. Install windshield wipers and front cover. **Convertible only:** Insert windshield antenna and fit cover molding for antenna cable.
	Refit interior	Refit A-pillar linings, roof rail linings, sun visors and interior rearview mirror.

Caution

The bonding does not immediately reach its full strength. In order to ensure sufficient bonding strength, the following boundary conditions must be met:

Curing time	3 hours
Temperature	min. 5 deg. C
Fixing time	1.5 – 2 hours

Do not operate the vehicle before the curing time has elapsed!

Printed in Germany – III, 1991

Removing and installing rear side window — 2-pack adhesive

The following tools and materials are required for removal and installation of the rear side window using 2-pack adhesive:

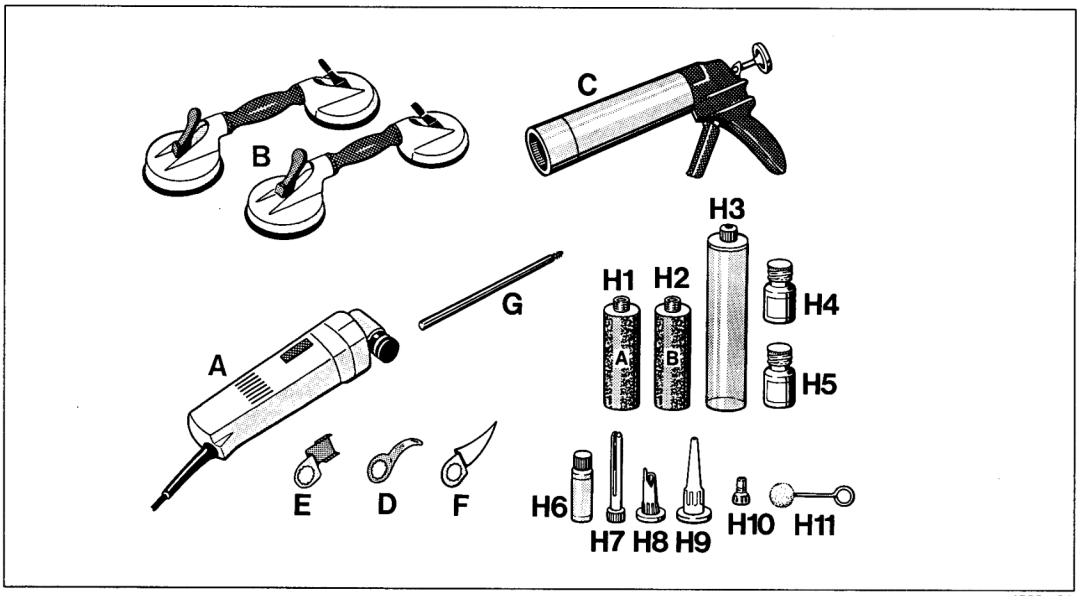

1266 - 64

A	Cutter	VAG 1561	e.g. VW Werk AG
B	Twin-cup suction puller	VAG 1344	Service equipment supply
C	Bonding gun	VAG 1628	
D	Cutting knife, curved	639.031.030.17	e.g. C & E FEIN GmbH & Co.
E	Flashing knife	639.031.130.22	P.O. Box 172
F	Cutting knife, cranked	639.030.720.17	7000 Stuttgart 1
G	Mixing rod 9528	000.721.952.80	Porsche Parts Department
H	Adhesive set	599.915.509.40	

Contents of adhesive set:

H 1 = Cartridge component A
H 2 = Cartridge component B
H 3 = Mixing cartridge
H 4 = Primer
H 5 = Activator
H 6 = Cleaning solution
H 7 = Injector nozzle
H 8 = Application nozzle
H 9 = Application nozzle
H 10 = Filling nozzle
H 11 = Touch-in tool

Printed in Germany – VII, 1992

Removing and installing rear side window — 2-pack adhesive

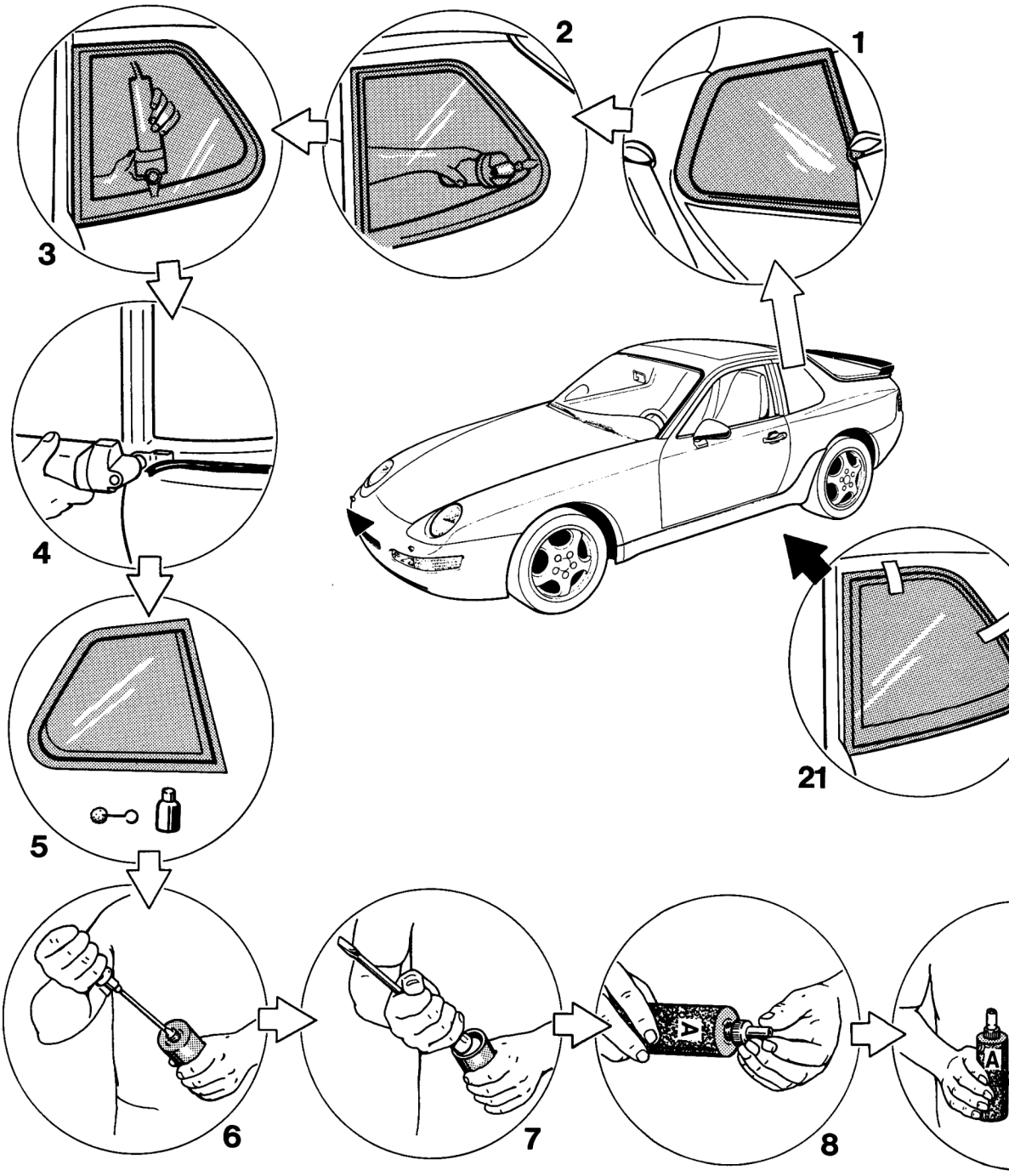

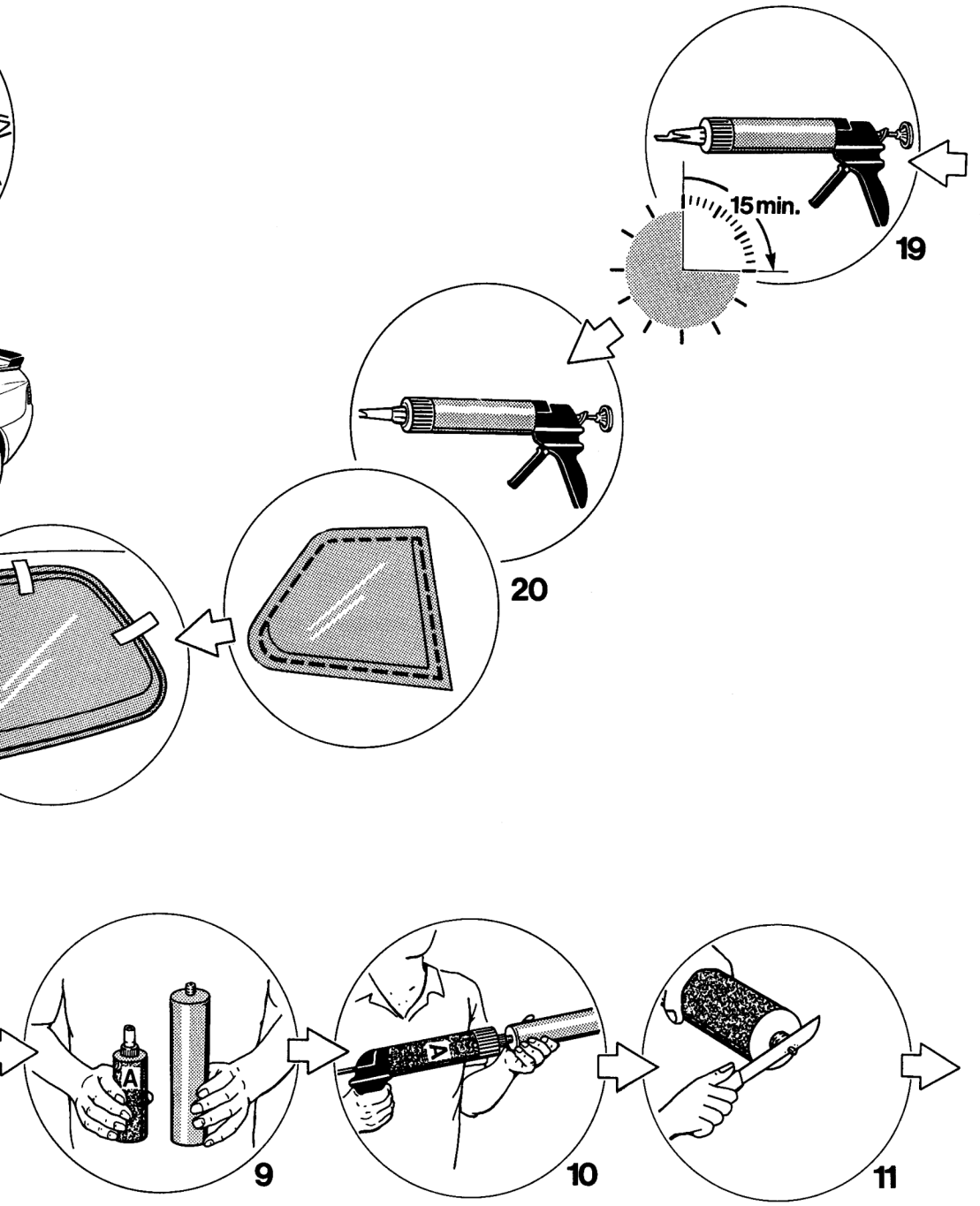

Removing and installing rear side window — 2-pack adhesive

Printed in Germany – VII, 1992

Removing and installing windshield - 2-pack adhesive

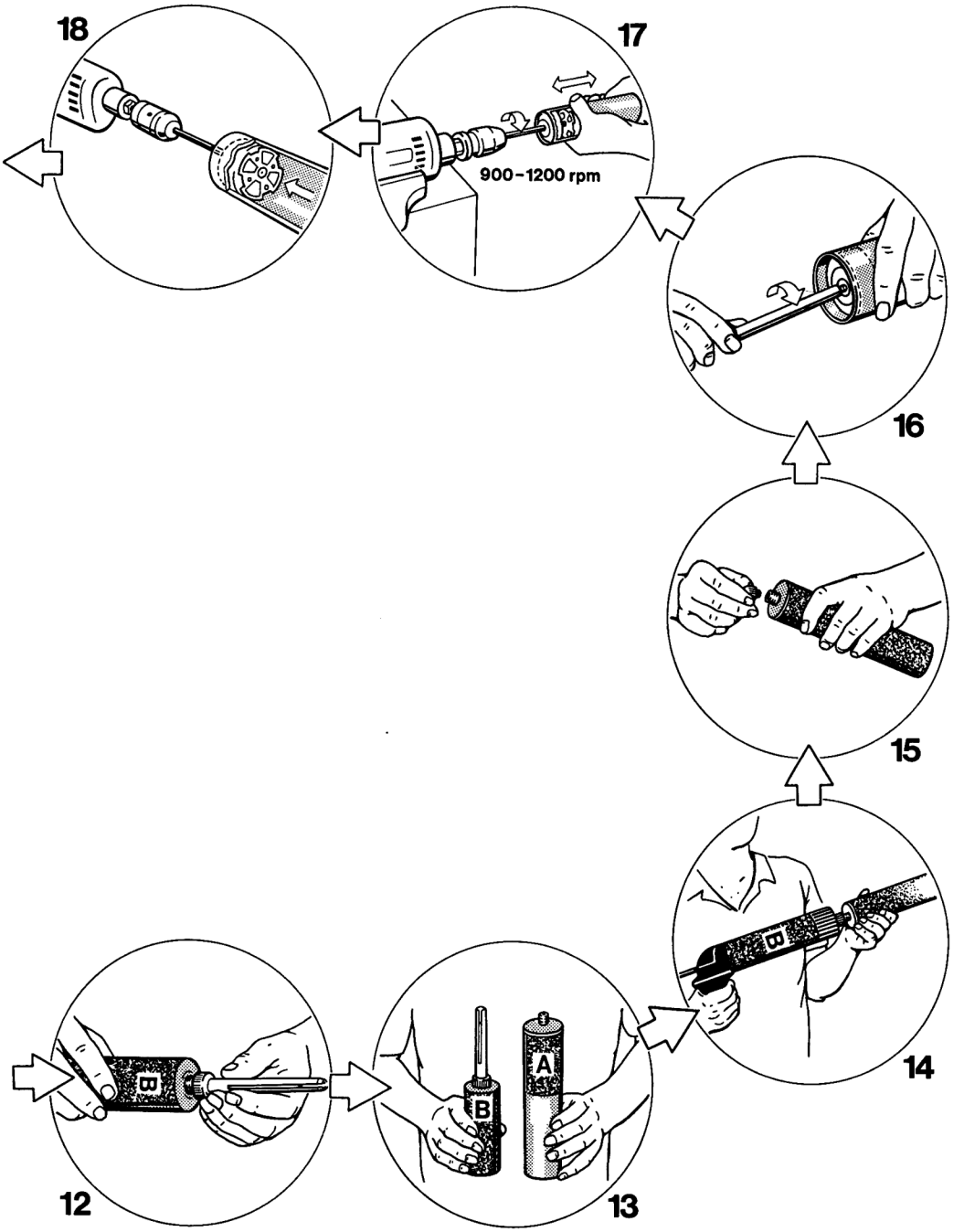

Printed in Germany – VII, 1992

Removing and installing rear side window — 2-pack adhesive

Removing rear side window

No.	Operation	Instructions
1	Remove interior in rear side window area	Remove cover strip of rear side window for side trim, B-pillar and roof rail.
	Fit cover to rear side panel	Cover rear side panel to avoid staining or damage.
	Open door window	**Caution: The door windows may only be closed after the curing time has elapsed.**
2	Cut out rear side window in roof rail and B-pillar area	Insert U-shaped knife (D) into cutter (A). Set vibration regulator to stage 3. Cut bonding between rear side window and body from inside (passenger compartment) along B-pillar and roof rail.
3	Cut out rear side window in side trim panel area	Insert cranked knife (F) into cutter (A). Set vibration regulator to stage 3. Cut bonding between rear side window and body from inside (passenger compartment) along side trim panel.
	Lift out rear side window	
4	Remove adhesive from body	Insert flashing knife (E) into cutter (A) and use flashing knife to remove adhesive from body only to the extent that the remaining adhesive covers the whole area in a uniform manner.

Printed in Germany – VII, 1992

No.	Operation	Instructions
	Clean window aperture of body	Clean window aperture of body thoroughly using cleaning solution (H6). **Caution: Make sure no cleaning solution residue remains on the bodywork.**
	Apply primer to damaged areas of bodywork	Use primer (H4) to coat damaged paintwork areas in non-visible section of windshield aperture.
5	Activate bonding section of window	Apply activator to (H5) to bonding section of pre-coated rear side window. **Caution: Allow a flash-off time of at least 10 minutes!**

Printed in Germany – VII, 1992

Preparing the adhesive cartridge for application of adhesive

No.	Operation	Instructions
6	Open nozzle fitting of cartridge containing component A	Use a screwdriver to pierce the diaphragm in the nozzle fitting of the cartridge with component A (H1).
7	Open flanged cover of cartridge containing component A	Use the screwdriver handle to pierce the flanged cover at the end of the cartridge containing component A (H1).
8	Screw filling nozzle onto cartridge containing component A	Screw filling nozzle (H10) onto cartridge containing component A (H1).
9	Place cartridge with component A into bonding gun	Place cartridge with component A (H1) into bonding gun (C). Remove screw-on cap from mixing cartridge (H3).
10	Press component A into mixing cartridge	Insert filling nozzle (H10) of cartridge containing component A (H1) into mixing cartridge. Press component A into mixing cartridge (H3) using the bonding gun (C).
11	Open nozzle fitting of cartridge containing component B	Use a knife to cut off the tip of the nozzle fitting of the cartridge containing component B (H2).
12	Screw injector nozzle onto cartridge containing component B	Screw injector nozzle (H7) onto cartridge containing component B (H2).
13	Place cartridge with component B into bonding gun	Place cartridge with component B (H2) into bonding gun (C).

Printed in Germany – VII, 1992

No.	Operation	Instructions
14	Press component B into mixing cartridge with component A	Insert injector nozzle (H7) of cartridge with component B (H2) into mixing cartridge (H3). Use the bonding gun (C) to press component B (H2) into mixing cartridge (H3) with component A.
15	Close mixing cartridge	Pull injector nozzle (H7) out of mixing cartridge (H3) and close mixing cartridge with screw-on cap.
16	Screw mixing rod into mixing cartridge	Screw mixing rod (G) **manually** into internal thread of mixing disc in the mixing cartridge (H3). Clamp other end of mixing rod in a drill chuck. Fit the drill into a suitable clamping device.
17	Mix component A with component B	Switch on drill (speed 900 to 1,200 rpm) and rotate mixing cartridge 25 times from stop to stop. Perform all 25 double strokes fairly rapidly.
18	Engage mixing disc into piston	Pull back mixing cartridge until a rattling sensation is felt. Switch off drill and screw mixing rod out of mixing cartridge. This will cause the mixing disc to engage into the piston of the mixing cartridge.
19	Place mixing cartridge into bonding gun	Insert mixing cartridge with mixed 2-pack window adhesive into bonding gun. Screw application nozzle (H8) onto mixing cartridge.

Caution: Observe open time of 15 minutes!

Open time is the time available for application of the adhesive and for installing the rear side window to the body.

Printed in Germany – VII, 1992

Installing the rear side window

No.	Operation	Instructions
20	Apply adhesive to rear side window	Apply a trapezoidal bead of 2-pack adhesive to the bonding section of the rear side window using the bonding gun.
	Place rear side window into bodywork	Place rear side window into window aperture and press into place.
21	Locate rear side window	Attach two strips of adhesive tape to locate the rear side window in roof area. Note: The locating strips may be removed after approx. 1 hour.
	Clean visible areas	Remove adhesive that has squeezed out immediately and clean the visible areas affected using cleaning solution (H5).
	Refit interior	Fit cover rail.

Caution

The bonding does not immediately reach its full strength. To ensure sufficient bonding strength, the following boundary conditions must be met:

Curing time	3 hours
Temperature	min. 5° C
Fixing time	approx. 1 hour
Bonding time	approx. 1 hour

Do not operate the vehicle before the bonding time has elapsed!

Printed in Germany – VII, 1992

Body Paint Colors Beginning With 1992 Models

Standard Colors:	
Grand Prix white	908
Black	700
Maritime blue	38B
Indian red	80K
Signal green	22S
Mint green	22R
Rubystone red	82N

Special Colors:	
Slate gray metallic	22D
Slate grey metallic	23F*
Oakgreen metallic	22L
Horizon blue metallic	37X
Cobalt blue metallic	37U
Coral red metallic	82H
Polar silver metallic	92E
Polar silver metallic	92M*
Black pearl effect	738
Midnight blue metallic	37W
Midnight blue pearl effect	39C*
Amethyst pearl effect	38A
Amethyst pearl effect	83K*
Amazonas green pearl effect	39A

* = Water-base paints

Water-base paints are applied exclusively by the manufacturer during production spraying. For repair of water-base paints, conventional refinishing paints matching the color of the original paint are used. I.e. the only prerequisite for resprays is that the correct refinishing paint is used (refer to Paint Manual, page L3-25 and L3-26). Color differences due to paint application do not occur.

Printed in Germany – VII, 1992

Body Paint Colors Beginning With 1992 Models

Standard Colors:	
Grand Prix white	908
Black	700
Black	741*
Maritime blue	38B
Indian red	80K
Signal green	22S
Mint green	22R
Speed yellow	12G

Special Colors:	
Slate grey metallic	22D
Slate grey metallic	23F*
Oakgreen metallic	22L
Oakgreen metallic	23G*
Horizon blue metallic	37X
Horizon blue metallic	38T*
Cobalt blue metallic	37U
Cobalt blue metallic	38U*
Polar silver metallic	92E
Polar silver metallic	92M*
Black pearl effect	738
Black pearl effect	744*
Midnight blue metallic	37W
Midnight blue pearl effect	39C*
Amethyst pearl effect	38A
Amethyst pearl effect	83K*
Amazonas green pearl effect	39A
Raspberry red - metallic	83E
Wimbledon green - metallic	23I
Violet blue - metallic	37E

* = Water-base paints

Printed in Germany – VII, 1992

Removing and installing plastic end and side applicates

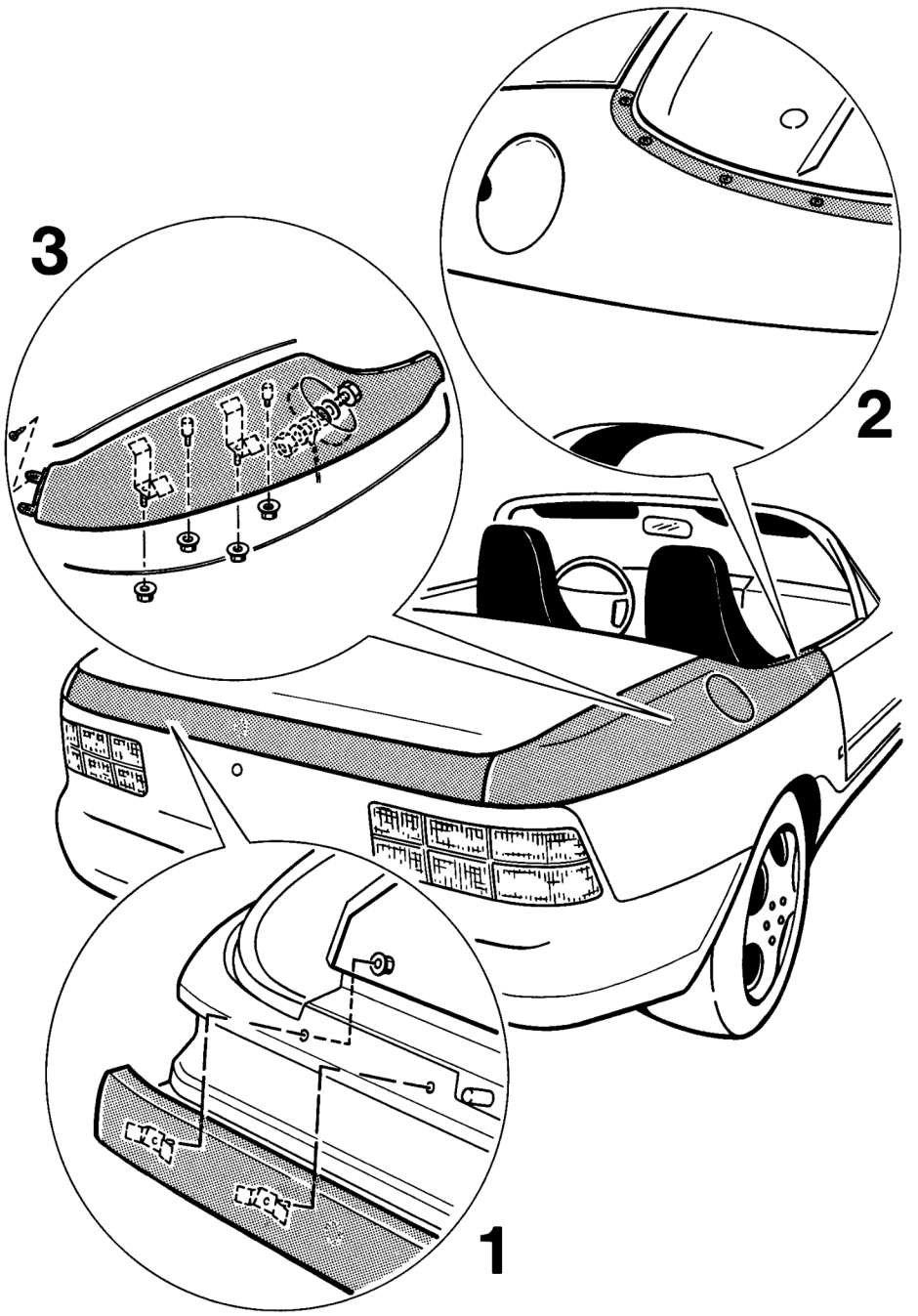

Printed in Germany – II,1991

Removing and installing plastic end and side applicates

Note

Removing and installing the side applicates requires removal of folding top (see "Removing and installing folding top", 61-1)

No.	Task	Instructions
Removal:		
	Unclip luggage compartment lining	
1 end	Undo screw fastenings of applicate	From the luggage compartment side, undo 4 fastening nuts of end applicate. Remove end applicate.
2	Undo fastening screws in area of folding top cover	Remove folding top gasket in area of side applicate from spot welding flange. Undo 8 screw fastenings of side applicate in area of folding top cover.
3	Undo fastening screws and nuts of side spplicate Undo screw fastening of shear-off device	Undo two fastening screws in transition area of side applicate to end applicate. From luggage compartment side, undo 4 fastening nuts of side applicate. Undo screw fastening of side applicate. Undo screw fastening of shear-off device on tank filler neck cladding.
	Detach glued-on side applicate from body	Starting from rear, detach glued-on side applicate from body by pulling it cautiously away.
Installation:		
	Line side applicate with butyl tape	Seal screw fastenings with butyl tape. Tack side applicate to body with butyl tape.
	Screw side applicate to body	4 nuts M 6 2 sheet metal screws 4.2 x 13 8 countersunk sheet metal screws 4.2 x 16
	Fit folding top gasket on	Fit folding top gasket onto spot welding flange in area of side applicate.
	Bolt on end applicate	4 nuts M 6
	Clip in luggage compartment lining	

Printed in Germany – II,1991

Removing and installing tank flap – Cabrio

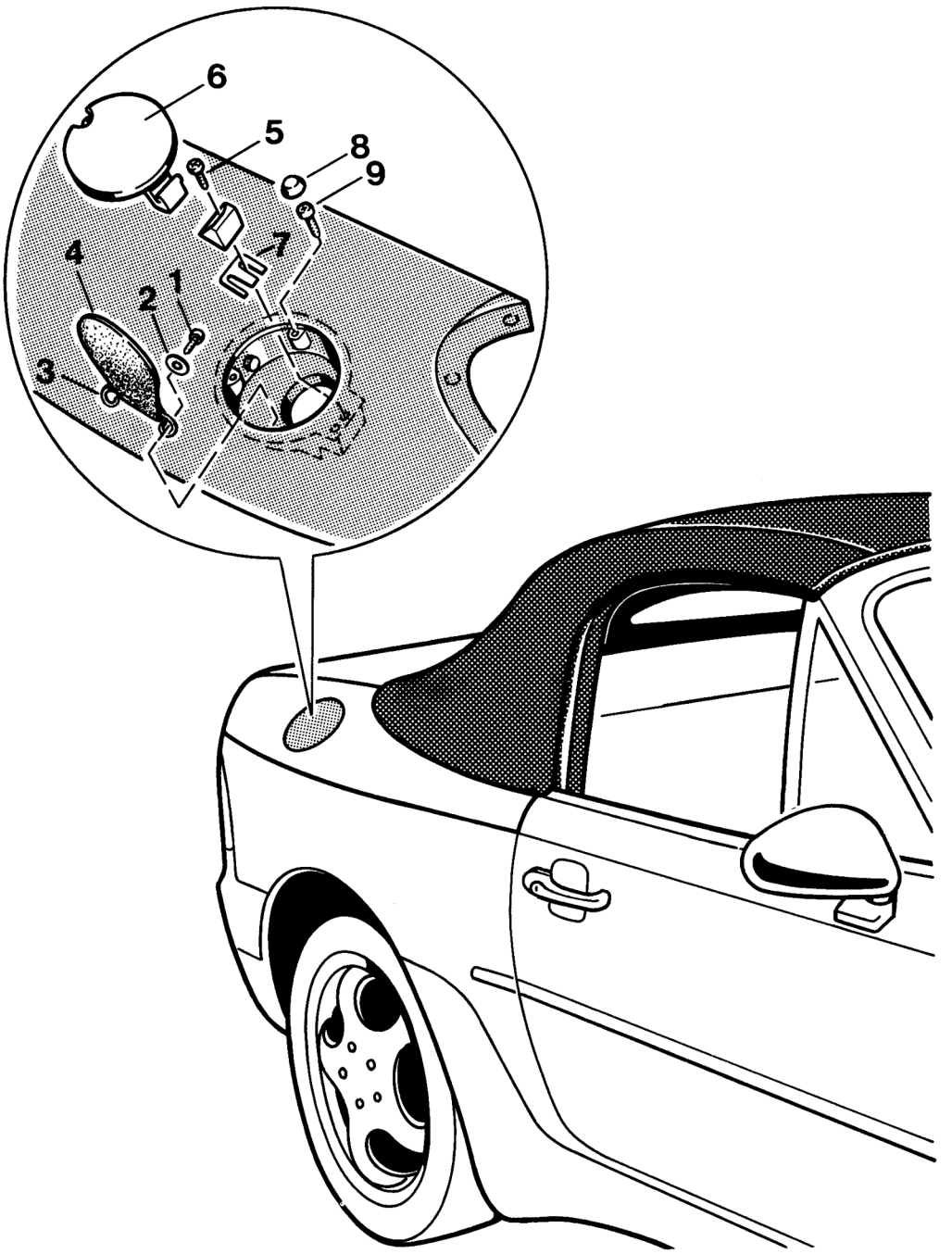

Printed in Germany – II, 1991

Removing and installing tank flap – Cabrio

No.	Designation	Qty.	Note: Removal	Note: Installation
1	Sheet metal screw 4.2 x 14	2		
2	Washer A 5	2		
3	Bracket	1		
4	Tank tang	1		
5	Fillister head sheet metal screw 4.2 x 19	2		
6	Tank flap	1		
7	Spacer disk	0–2		Adjustment of the overall height of the tank flap is by means of spacer disks (max. 2 pcs.)
8	Stop	2		Fit onto sheet metal screw
9	Sheet metal screw	2		The angle of inclination of the tank flap when closed is altered by adjusting the sheet metal screws

Printed in Germany – II, 1991

Removing and installing door mirror

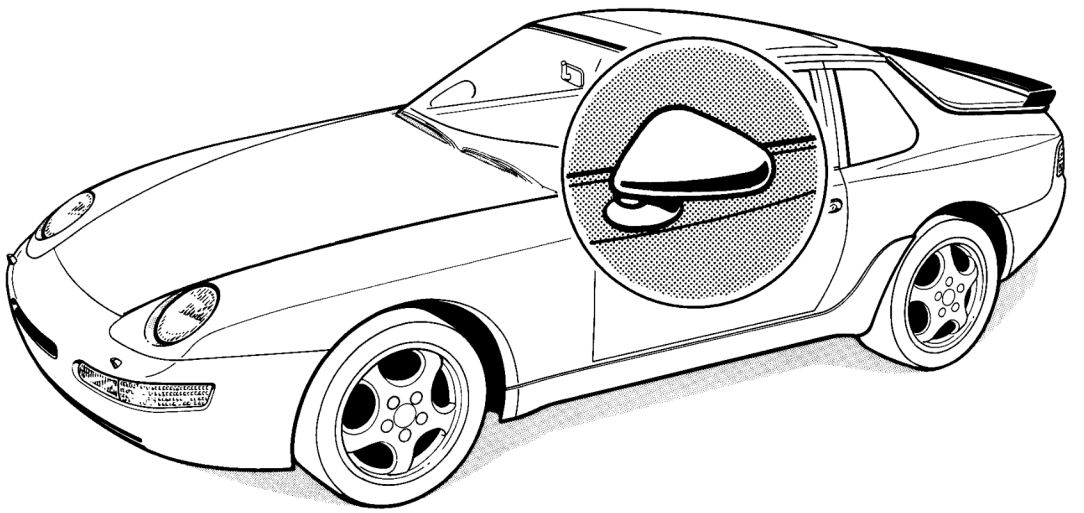

808 - 66

Printed in Germany – II, 1991

Removing and installing door mirror

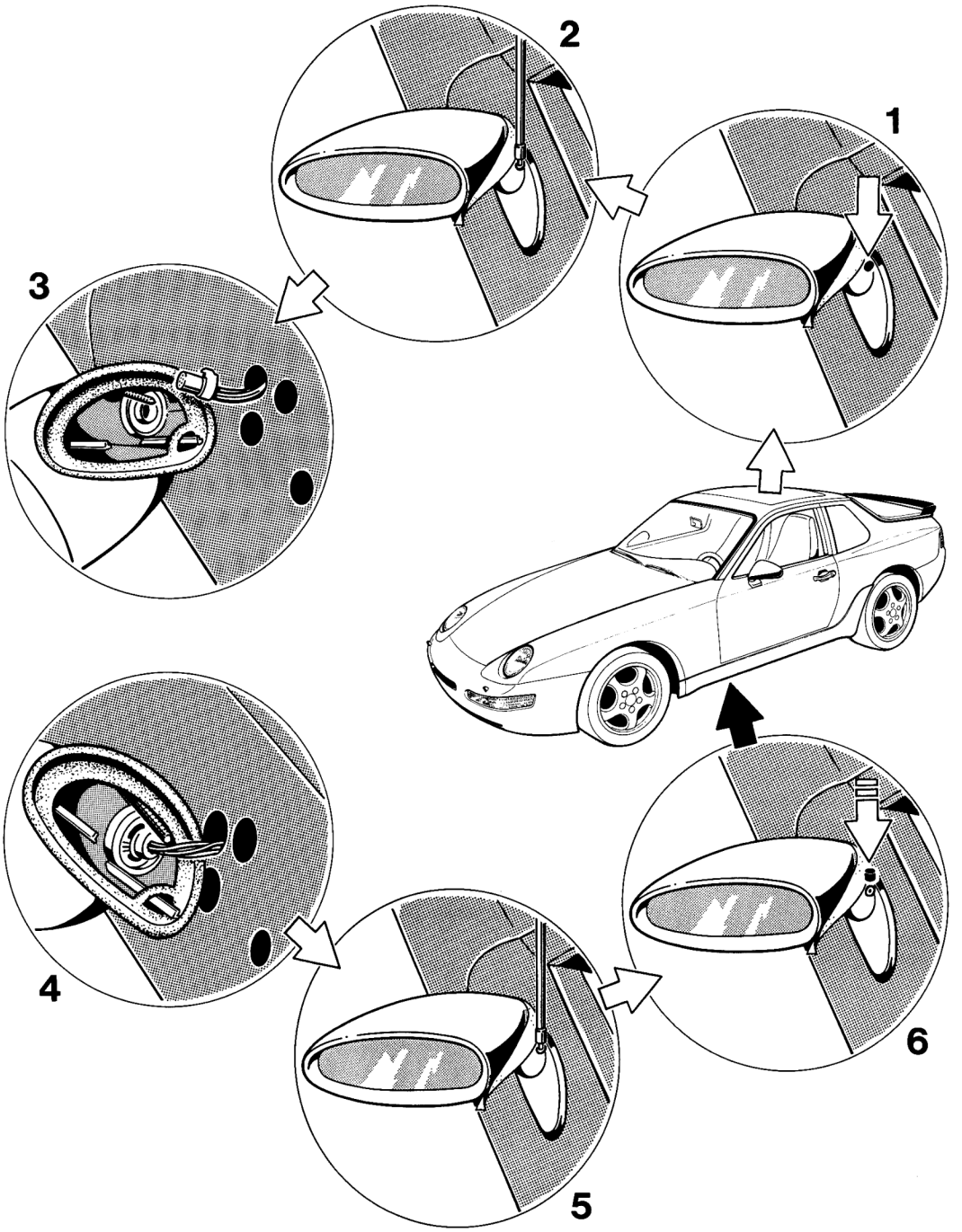

Printed in Germany – II, 1991

Removing and installing door mirror

Removing the door mirror

No.	Operation	Instructions
	Cover mirror housing	Cover mirror housing in the mirror base mounting area to avoid damage.
	Turn mirror housing forward	
1	Lift off protective cap	Lift protective cap carefully off the mirror base mounting.
2	Undo mirror base mounting	Release socket head screw for mirror base mounting.
	Lift off door mirror	Lift door mirror and lift it off the door.
3	Disconnect connector	Disconnect connector for mirror electronics.

Installing the door mirror

No.	Operation	Instructions
4	Reconnect connector	Reconnect connector of mirror electronics.
	Position door mirror	Adjust mirror to hole pattern in door.
5	Tighten mirror base	Tighten mirror base mounting of door mirror. **Note: The socket head screw for the mirror base mounting features a microseal and must be replaced prior to installation.**
6	Put protective cap into place	Position protective cap on mirror base mounting.
	Turn mirror housing back into initial position	
	Remove cap of mirror housing	

Printed in Germany – II, 1991

Dismantling and assembling door rearview mirror

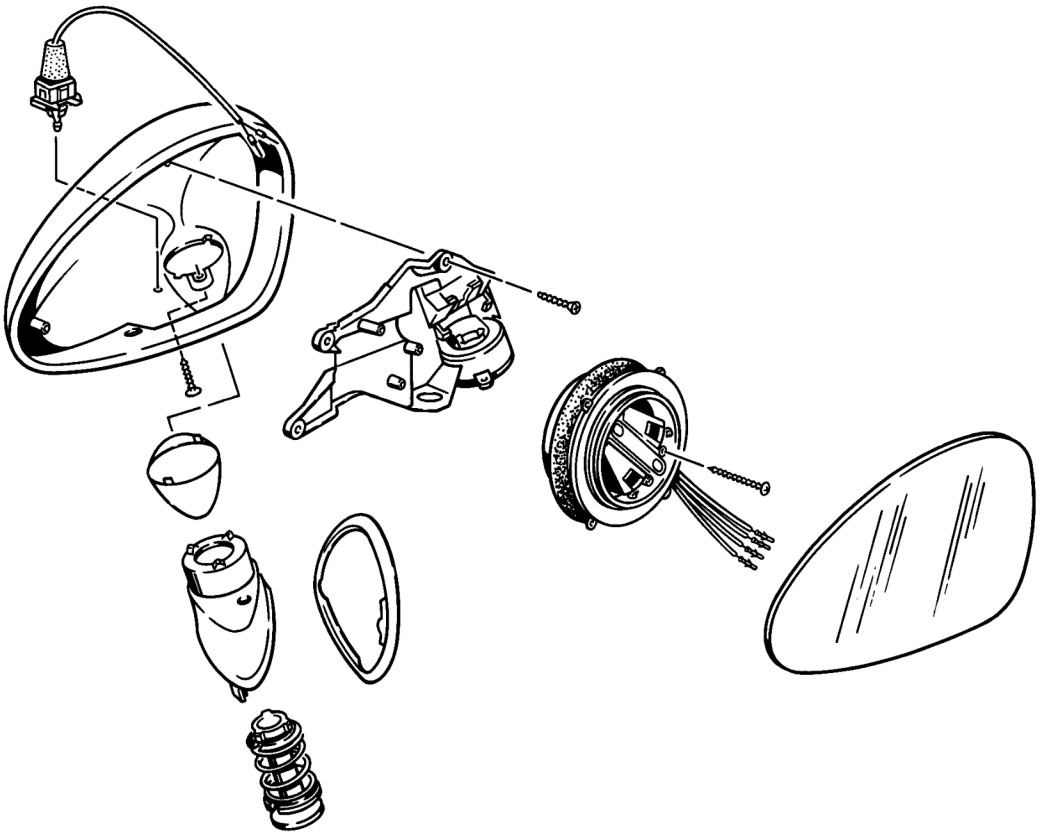

939 - 66

Printed in Germany – III, 1991

Dismantling and assembling door rearview mirror

Dismantling door rearview mirror

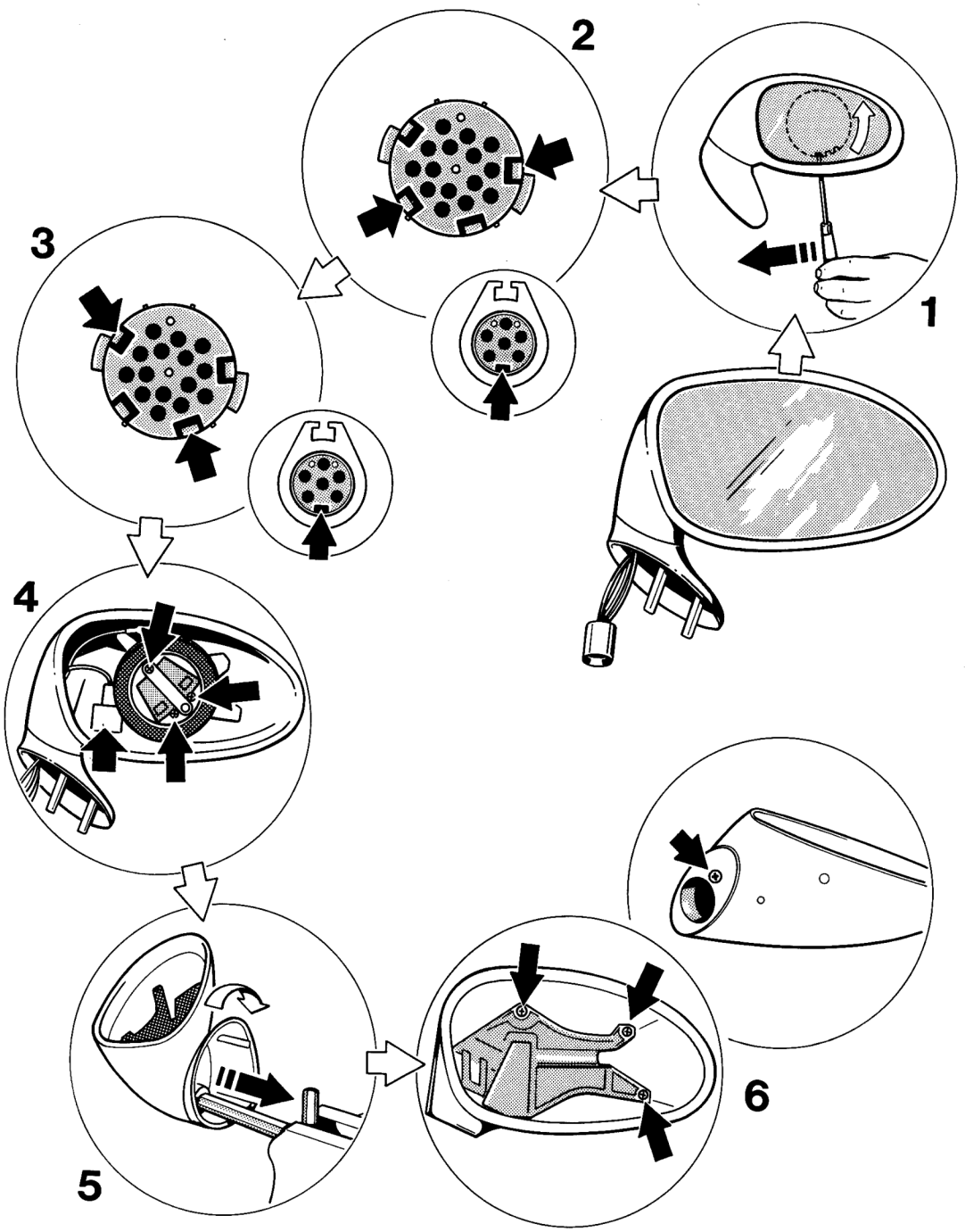

Printed in Germany – III, 1991

Dismantling and assembling door rearview mirror

Dismantling door rearview mirror

No.	Operation	Instructions
1	Separate mirror glass from adjusting motor	Press mirror glass down into mirror housing. Insert a screwdriver across the bottom aperture into the mirror housing and loosen mirror glass retainer by turning the retaining ring.
	Disconnect plug	Disconnect plug for mirror glass heater.
2	Dismantle connector	Push back sealing cushion on wiring harness. Insert a small screwdriver from the wiring harness side to disengage the insert, pressing at the cables at the same time. Note: The insert is now in the preengagement position.
3	Dismantle connector	To remove the insert completely, disengage both remaining lugs in the same way.
	Disengage contact pins	Disengage contact pins by pulling lightly at the wires and turning the contact pins to and fro at the same time.
4	Loosen adjusting motor	Undo fastening screws of adjusting motor. Remove outside sensor from mirror housing and lift it out complete with its wiring harness.
5	Separate mirror base from mirror housing	Clamp 14 mm socket hex head wrench in a vise. Place stud for mirror base / mirror housing union onto the socket hex head wrench. Loosen union by applying force in axial direction and rotating the door mirror by 90 deg. Remove stud complete with centering washers and tensioning spring.
6	Remove reinforcing plate	Undo fastening screws and take reinforcing plate out of mirror housing. Remove mirror housing seal.

Printed in Germany – III, 1991

Dismantling and assembling door rearview mirror

Assembling door rearview mirror

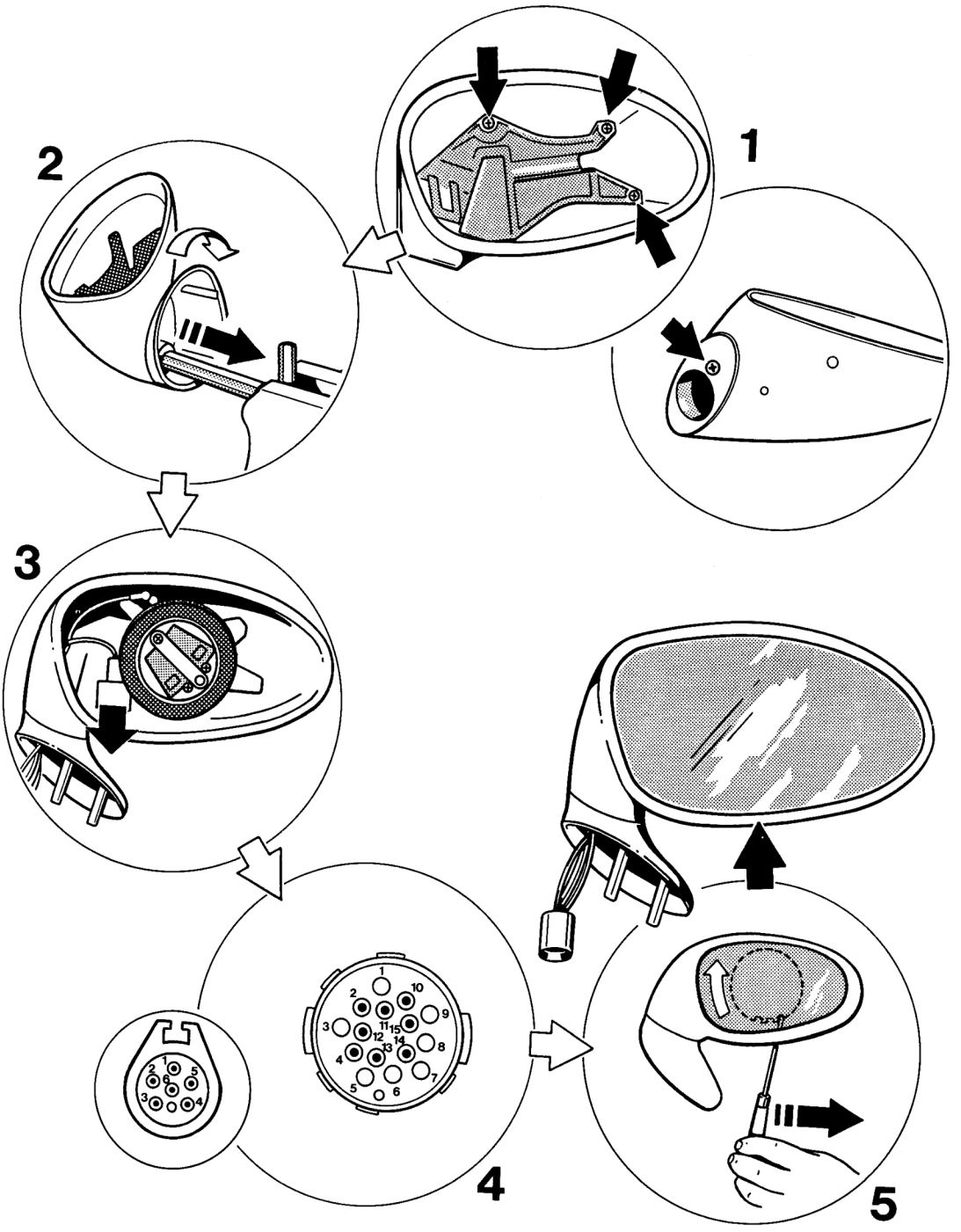

Printed in Germany – III, 1991

Dismantling and assembling door rearview mirror

Assembling door rearview mirror

No.	Operation	Instructions
	Position mirror housing seal	
1	Install reinforcing plate	Tighten fastening screws of reinforcing plate and mirror housing seal.
2	Fit mirror housing complete with mirror base	Clamp 14 mm socket hex head wrench in a vise. Grease centering washers of stud for mirror base / mirror housing union. Assemble mirror housing, mirror und base and stud. Place stud onto socket hex head wrench. Tighten by applying axial force and rotating the door mirror by 90°.
3	Install adjusting motor	Tighten fastening screws to fit adjusting motor to the reinforcing plate.
4	Assemble connector	Introduce wiring loom into door rearview mirror. Position insert in connector housing and push into preengagement position. Put sealing cushion in place. Insert contact pins according to pin allocation plan or wiring diagram. Note: When assembling the connector sections (with corresponding section on door), the insert is pushed into the final position. If a non-allocated terminal is pierced at the sealing cushion, use a sealing plug (available as spare part) to close it.
	Engage outside sensor into mirror housing	
	Reconnect cables	Reconnect electrical cables for mirror glass heating.
5	Fit mirror glass complete with adjusting motor	Place mirror glass into mirror housing. Insert a screwdriver through the bottom aperture and tighten mirror glass mounting by rotating the retaining ring.

Printed in Germany – III, 1991

Removing and fitting side member panel

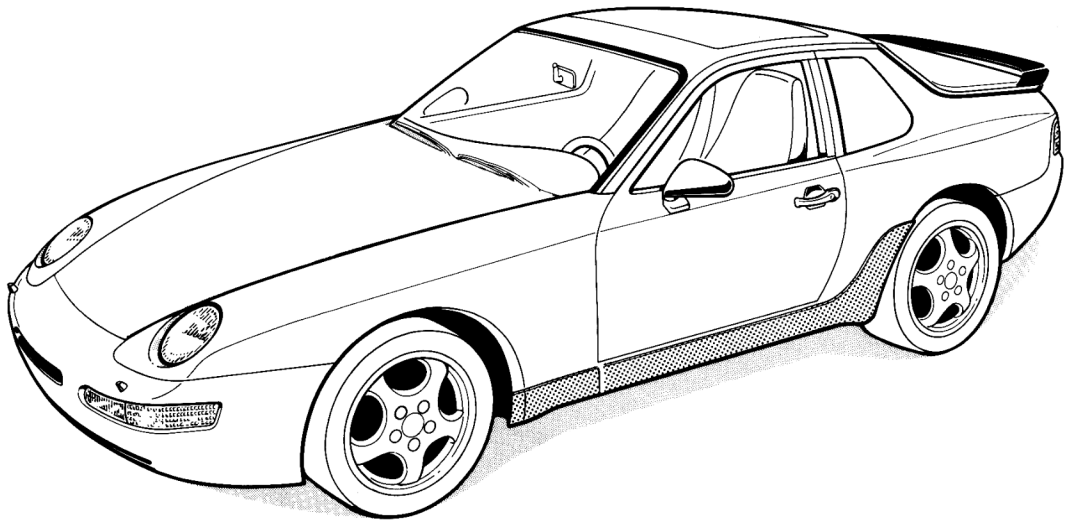

820 - 66

Printed in Germany – III, 1991

Removing and fitting side member panel

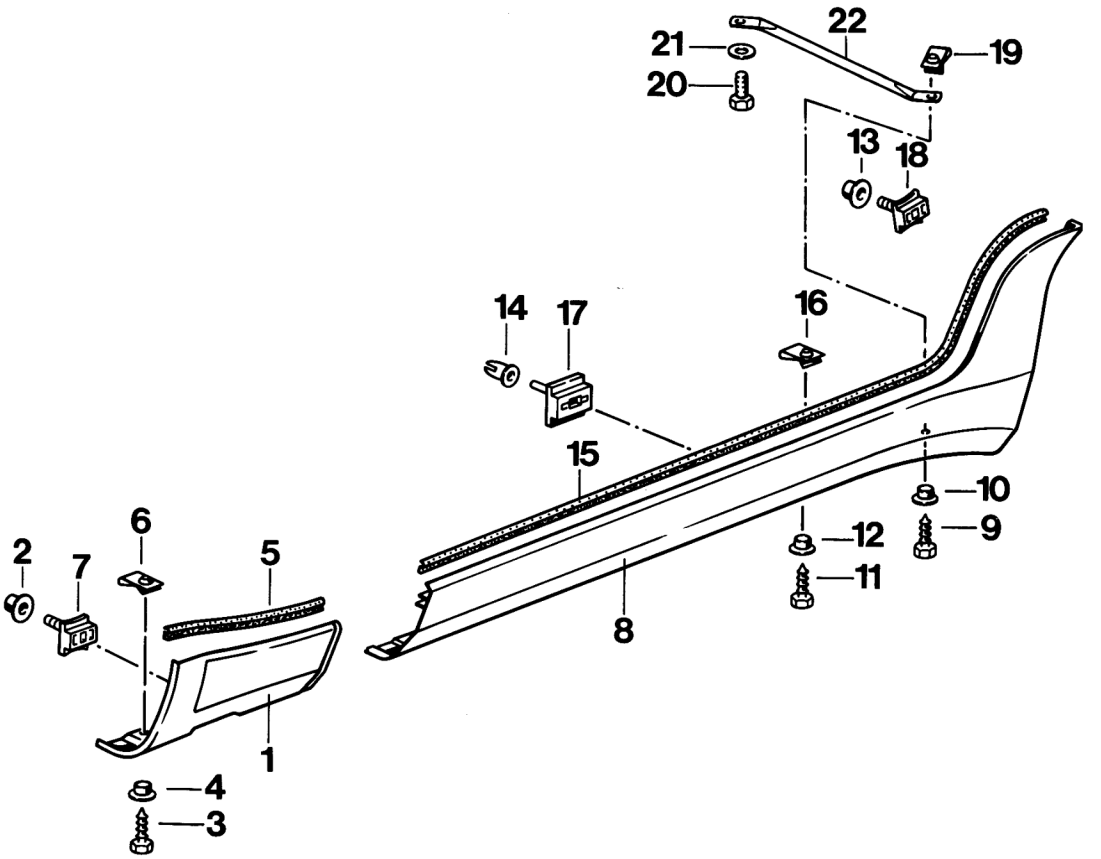

817 - 66

Printed in Germany – III, 1991

Removing and fitting side member panel

No.	Designation	Qty.	Note: Removal	Installation
1	Side sill	1		
2	Pushbutton	1		
3	Hexagon head sheetmetal screw B 6.3 x 16	1		
4	Spacer sleeve	1		
5	Cover molding	1		Check, replace if required
6	Sheetmetal nut B 6.3	1		Adjust to center of hole
7	Bracket T 5	1		
8	Side sill	1		
9	Hexagon head sheetmetal screw B 6.3 x 16	1		
10	Spacer sleeve	1		
11	Hexagon head sheetmetal screw B 6.3 x 16	5		
12	Spacer sleeve	5		
13	Pushbutton	5		
14	Grommet	8		
15	Cover molding	1		Check, replace if required
16	Sheetmetal nut B 6.3	5		Adjust to center of hole
17	Clip	8	Preload clips by inserting a screwdriver and unclip them using a second screwdriver	Check, replace if required

Printed in Germany – III, 1991

No.	Designation	Qty.	Note: Removal	Note: Installation
18	Bracket T 5	1		
19	Sheetmetal nut B 6.3	1		Adjust to center of hole
20	Hexagon head bolt M 6 x 16	1		
21	Washer B 6,4	1		
22	Stay	1		

Printed in Germany – III, 1991

Removing and installing badge on cover

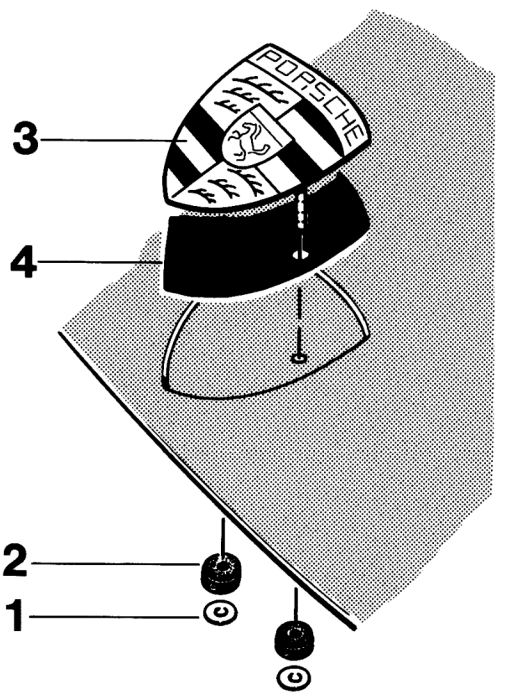

811 - 66

No.	Designation	Qty.	Note: Removal	Installation
1	Tapping nut	2	Turn counterclockwise to remove	Replace, turn clockwise to fit
2	Grommet	2		Check, replace if required
3	Badge	1		
4	Backing	1		Insert into embossed recess in cover

Printed in Germany – III, 1991

Removing and installing wheel housing liner

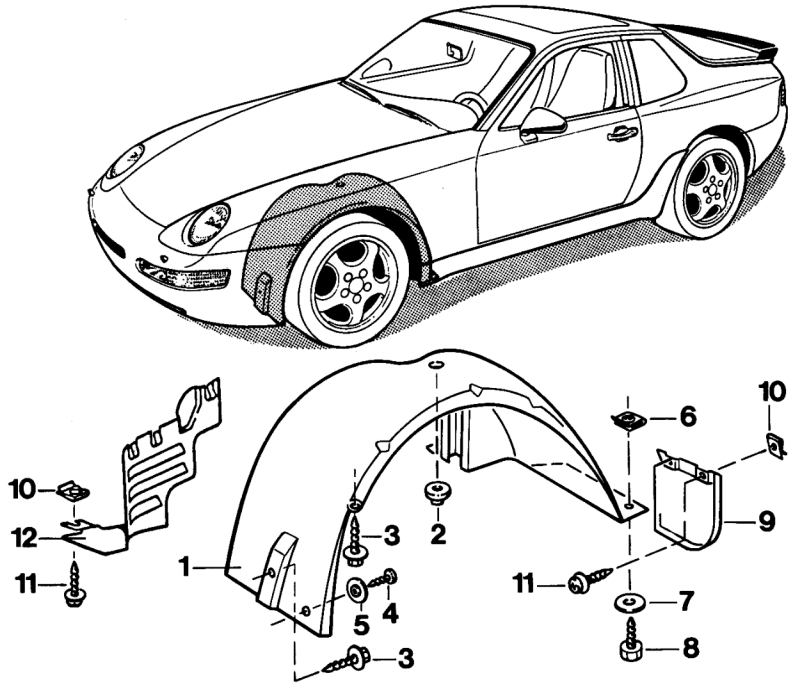

1400 - 66

No.	Designation	Qty.	Note: Removal	Note: Installation
1	Wheel housing liner	2		
2	DRK button T5	8		Replace
3	Combin. screw M 6 x 16	4		
4	Sheetmetal scr. B 4.2 x 16	4		
5	Spacer	4		
6	Sheetmetal nut 6.3	4		Adjust to center of hole
7	Washer B 6.4	4		
8	Sheetmetal screw 6.3	4		
9	Cap	2		
10	Sheetmetal nut B 4.8	10		Adjust to center of hole
11	Combination sheetmetal screw 4.8 x 19	10		
12	Extension	2		

Printed in Germany, VIII – 1993

Inspecting Seat Belts

Checking Function

It must be possible to have the belt strap roll off of the automatic reel via the reversing fitting without hesitation when pulling the seat belt uniformly and the tongue of the seat belt must be heard engaging in the belt lock. The automatic reel must lock when the seat belt strap is pulled suddenly.

Checking Condition

A visual inspection of the seat belt must not produce any damage or signs of wear on the belt strap. The seat belt must be replaced, if the belt strap is damaged in the form of cuts, fringing, torn seams, rubbing spots or similar conditions.

Additional Checking for Seat Belts with Overload Indicators (Tear Seams) – Airbag Equipment

The tear seam on the belt strap above the holder must not be damaged in addition to the fact that these seat belts must have perfect function and condition. The tear seam serves as an overload indicator, which reports an overloaded condition and therefore the necessity to replace a seat belt.

1 = Anchorage point for holder

2 = Anchorage bolt

3 = Holder

4 = Plastic cap

5 = Indicator (tear seam)

6 = Belt strap

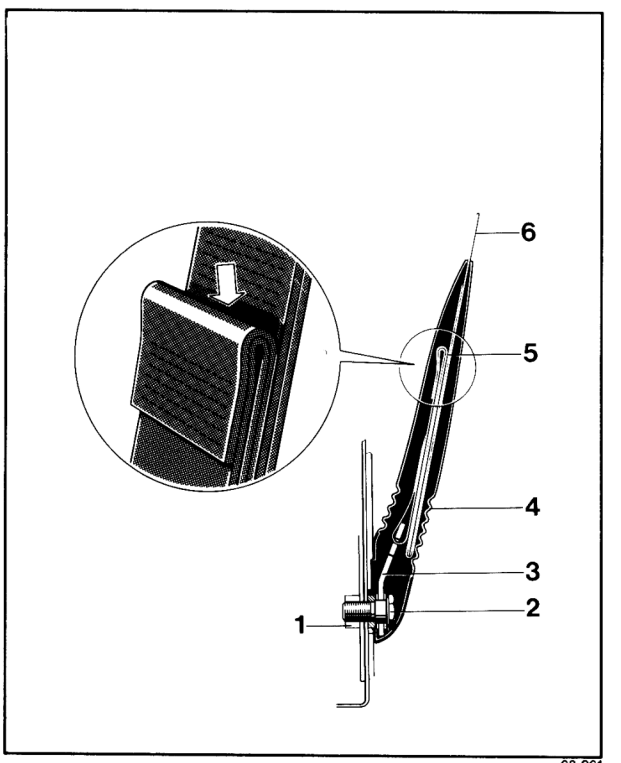

68-261

Printed in Germany – II, 1991

Safety Precautions for Working on Cars with Airbag

Airbag units are pyrotechnical items of Danger Class T 1. Handling, transportation and stor-age are subjected to the legislation for explo-sives.

The mentioned legislative measures refer to the Federal Republic of Germany. Always conform with the pertinent legislation in other countries.

The beginning of work on pyrotechnical items must be reported to the Trade Supervisory Office (official authorities) 14 days in advance.

Shipping

The shipment of airbag units may only take place in the officially approved packaging for transportation. Airbag units may not be transported together with other dangerous items.

Within a company transportation is only permitted in the trunk or cargo room of a vehicle with use of the above mentioned packaging for transportation. Transportation in the passenger compartment is forbidden.

Storage

Storage of airbag units must be in conformance with the second ordinance of the legisation for explosives. According to this ordinance small amounts of substances and items may be stored at certain locations without a special storage permit. For pyrotechnical items of Danger Class T 1 this would be max. 20 kg (gross) in a workroom or max. 200 kg (gross) in a storeroom. Airbag units must be stored locked.

When storing airbag units it is very important to make sure that the padded sides face up (danger of injury from an ejected airbag unit in case of accidental ignition).

Airbag units may not be stored together with other products in danger classification (paint, etc.).

Printed in Germany – IV, 1992

Installation and Repairs

Testing and installing may only be carried out by qualified personnel.

The following precautionary measures are always mandatory prior to working on the airbag system as well as work on neighboring parts, where there is danger that power supplying parts could get too close to the airbag system.
1. Turn off ignition
2. Disconnect and cover battery ground pole.

After disconnecting the battery installation or repairs on the vehicle with use of a hammer or similar tools may first be begun after **waiting 20 minutes**. This is necessary to interrupt power supply of the airbag system and to guarantee that accidental ignition is not possible.

Installation of airbag units must commence immediately after removal from the location of storage. Under no circumstances may they be left unattended. Airbag units must be placed under lock immediately when installing procedures are interrupted.

Airbag units must never have contact with grease, oil, cleaning solutions or similar products.

Airbag units must never be subjected to temperatures above 90° C (195° F), not even briefly.

Airbag units, crash sensors and control units, which have fallen from a height of more than 0.5 meter (1.5 feet), may no longer be installed.

Additional trim, labels or anything similar may not be installed on the steering wheel or in the area of the front passenger's airbag.

No modifications or changes may be made on the wiring and components of the airbag system.

The battery must always be disconnected before beginning with straightening and welding work with use of an electric welder.

If welding is required in the immediate vicinity of crash sensors and control, these parts must be removed first.

Airbag components may never be repaired; they must always be replaced.

Note

Hands must always be washed thoroughly after touching triggered airbag units.

Scrapping Airbag Units

Non-ignited airbag units are a source of danger, even for the environment. Non-ignited airbag units may not be scrapped. They must be sent to Porsche or a responsible importer (see page 68 - 61).

Shipment of airbag units is permitted only in the officially approved packaging for transportation.

Printed in Germany – VIII, 1993

Replacing cover for passenger airbag

When the airbag was triggered while no passenger was in the car, damage to the instrument panel is minimal. In this case, if may be sufficient, following detailed inspection of the instrument panel, to replace only the cover. Check the instrument panel on the passenger side for cracks and other accident-related damage. **The instrument panel must be free from bending traces and cracks.** Minor deformations of the instrument panel can be straightened.

1. Disconnect battery negative terminal and cover terminal.
2. Remove steering wheel.
3. Remove instrument fascia.
4. Remove operating switch for heater/air conditioning.
5. Remove right-hand cover molding from instrument panel.
6. Remove right-hand switch cover.
7. Remove right-hand lateral jet.
8. Remove glove compartment.
9. Undo airflow duct fastening screw.

Note

To facilitate assembly, the fastening screw of the airflow duct may be reversed for installation, i.e. remove the sheetmetal nut from the instrument panel and place it on the airflow duct.

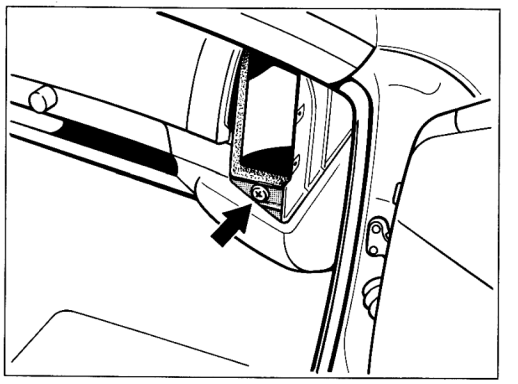

947-68A

10. Disconnect plugs from airbag unit.
11. Undo fastening screw.

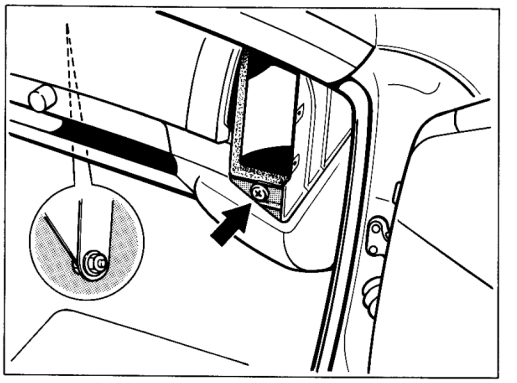

947-68B

Printed in Germany – III, 1991

Note

The screw is of the micro-seal type. Use a new screw for assembly.

12. Undo fastening screws of cover (4 pc.).

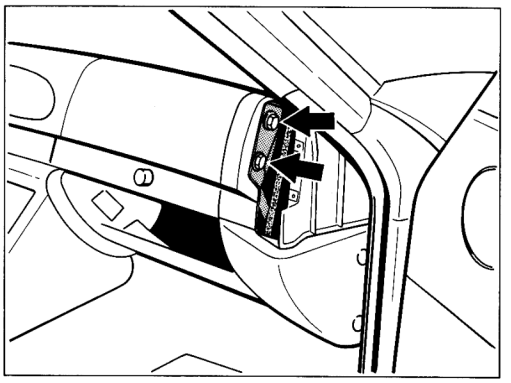

949-68

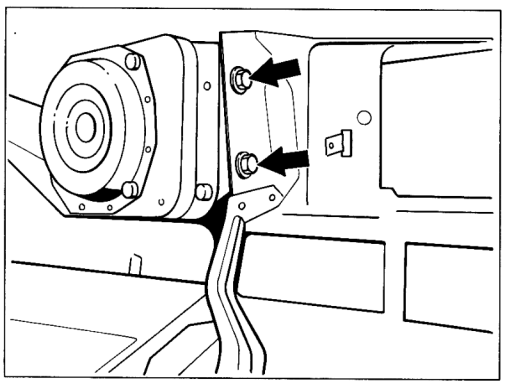

Instrument panel removed 950-68

Note

The screws are of the micro-seal type. Use new screws for assembly.

13. Lift out cover complete with airbag unit.

Note

When fitting the unit, the cover may bind on the right-hand side. To prevent this, start inserting the cover on the right-hand side.

14. Undo fastening screws of airbag unit (socket hex head, 4 pc.).

Note

The screws are of the micro-seal type. Use new screws for assembly.

Printed in Germany – III, 1991

Removing and Installing Airbag Steering Wheel

Removing

1. Disconnect battery and cover pole or battery.

2. Remove driver's airbag unit (see page 68 - 54).

3. Unscrew and remove hexagon nut with the spring washer.

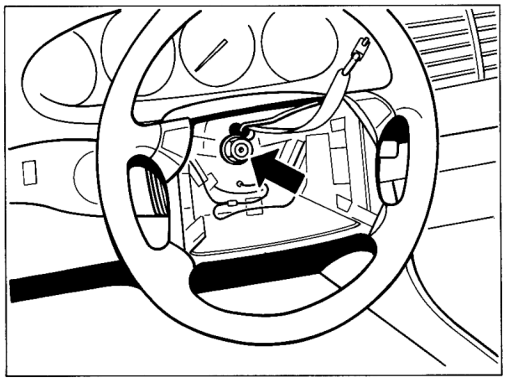

1019A-68

4. Mark position of steering wheel to steering shaft for reinstallation.

Installing

1. Mount steering wheel in straight ahead position of the road wheels or according to the removal marks in such a manner, that the upper steering wheel spokes are horizontal.

Note

Steering wheel must be mounted in such a manner that electric leads of the contact unit are not pinched.

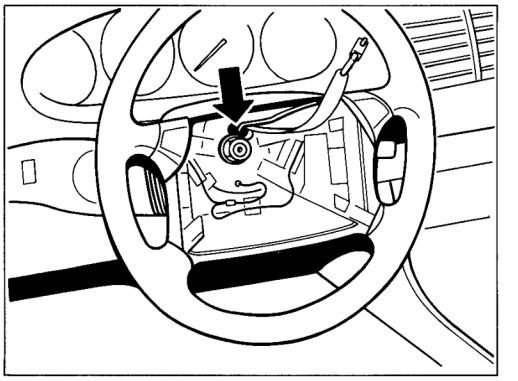

1019B-68

2. Install hexagon nut with spring washer and tighten with **45 Nm** (32.5 ft. lbs.).

3. Install driver's airbag unit.

4. Check function of horn.

Printed in Germany – IV, 1992

Removing and Installing Airbag Components

Removing and Installing Driver's Airbag Unit

1. Disconnect battery and cover pole or battery.

2. Unscrew two mounting screws with a Torx T 30 screwdriver socket.

Note

Screws must be replaced each time they are loosened.

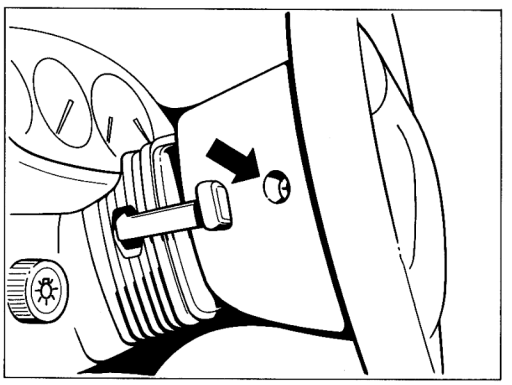

3. Disconnect plug.

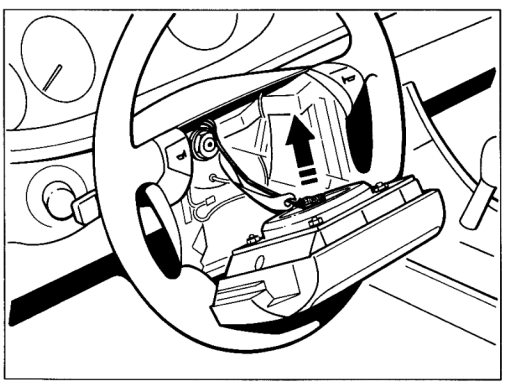

1021-68

Note

The airbag unit must always be laid aside in such a manner that the padded side faces up.

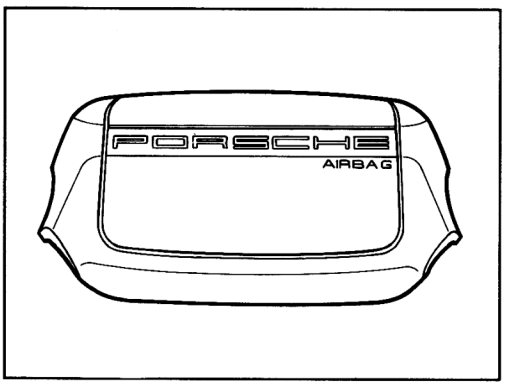

275-68

Airbag units must be placed under lock when removed for a long time. Confrom with the safety precautions.

Tightening torque for mounting screws: 10 Nm (7 ft. lbs.).

Printed in Germany – IV, 1992

Removing and installing contact unit

1. Remove airbag steering wheel (refer to page 68 - 53).

2. Undo and lift out cover.

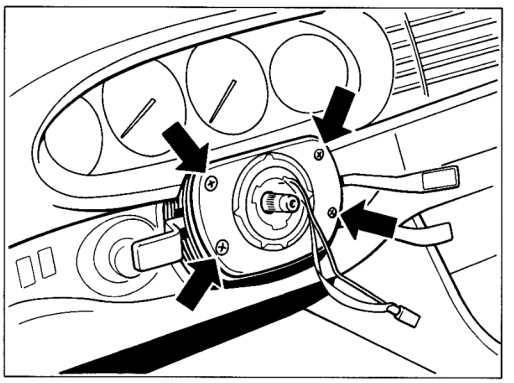

277-68

3. Disconnect plug connectors.

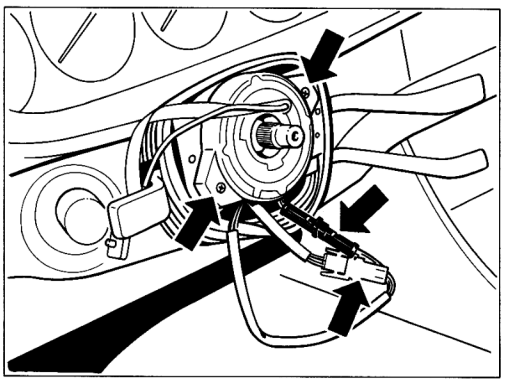

1023-68

4. Undo mounting screws

Note

Before fitting the contact unit, align front wheels to straight-ahead position and place contact unit in center position (approx. 4 1/2 turns from left-hand or right-hand end stop). The precise center position is indicated by two arrows.

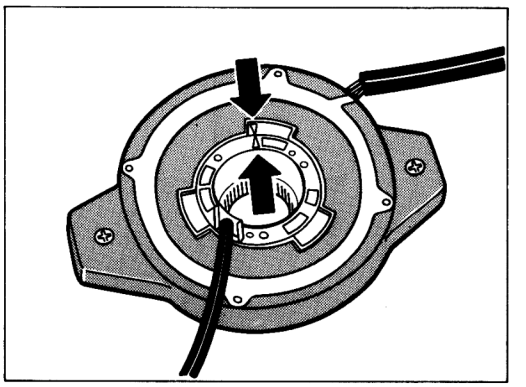

280-68

New contact units are locked in the center position. The lock is not removed until the contact unit has been fitted.

Printed in Germany – IV, 1992

Removing and installing front impact sensors

Note

The front impact sensors are placed high up on the left and right wheel house walls in the driver and passenger footwells.

The installation position is determined by the mounting.

1. Disconnect battery and cover terminal or battery, respectively.

2. Remove control unit for cruise control and disconnect connectors T 19 and T 28 (for left-hand front sensor only).

3. Disconnect connector for front impact sensor.

4. Undo shear-off nuts using Special Tool 9259.

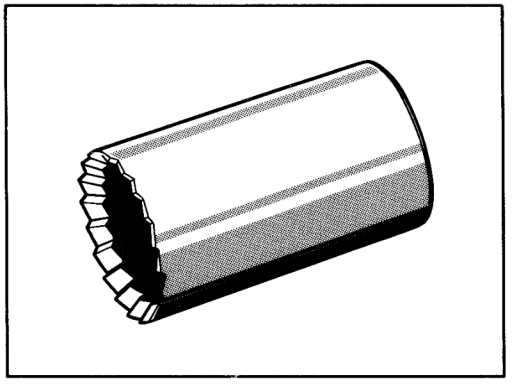

281-68

Special Tool 9259

Note

To tighten the shear-off nuts, use 1/4 inch Allen key.

The mounting locations at the body must be cleaned down to the bare metal.

Printed in Germany – IV, 1992

Removing and installing airbag unit on passenger side

1. Disconnect battery and cover terminal or battery, respectively.
2. Remove glove box.
3. Remove air duct hose.
4. Pull off insulating strips from connectors.
5. Disconnect the plug connectors from the unit.
6. Undo mounting screw and nuts of holder.
   Tightening torque: 13 Nm (10 ftlb)

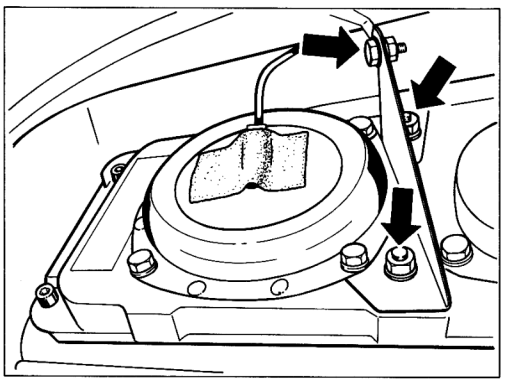

1026A-68

Note

The screw has a microencapsulated coating.
Use new screw for fitting.

7. Undo hexagon socket head screws (4 pc.).

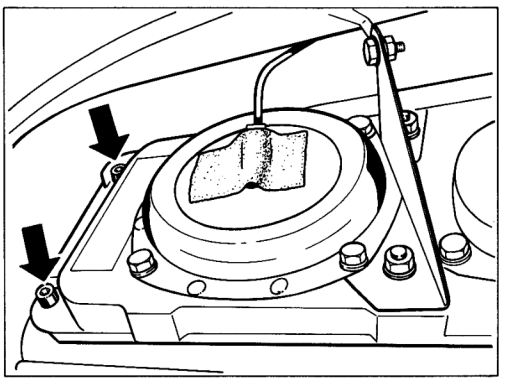

1026B-68

Tightening torque: 6 Nm (5 ftlb)

Note

The screws have a microencapsulated coating. Use new screws for fitting.

Printed in Germany – IV, 1992

Removing and installing control unit

Note

The control unit is fitted on the passenger side ahead of the glove box.

1. Disconnect battery and cover terminal or battery, respectively.

2. Undo shear-off nuts (2 pc.) with Special Tool 9259.

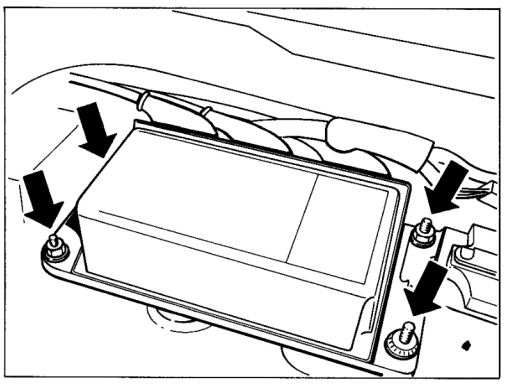

1024-68

3. Undo hexagon head nuts (2 pc.) with socket wrench.

4. Push back rubber grommets and release connector latch.

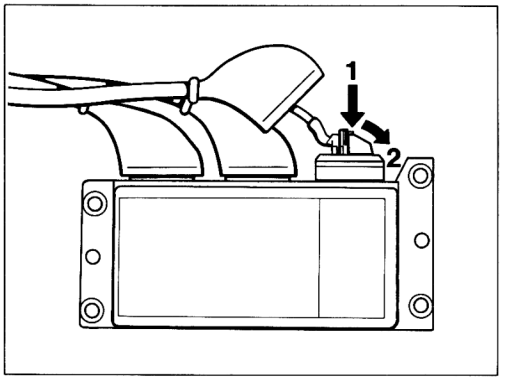

1025-68

5. Disengage connector.

Note

The mounting locations at the body must be cleaned down to the bare metal. To tighten the shear-off nuts, use a 1/4 inch Allen key.

Fit shear-off nuts diagonally.
The shear-off nuts are fitted without washers.
The M 6 hexagon head nuts are used with A 6.4 DIN 125 washers.

Tightening torque of M 6 nuts: 10 Nm (7 ftlb)

Printed in Germany – IV, 1992

Removing and installing wiring harness.

1. Disconnect battery and cover terminal or battery, respectively.

2. Remove fresh-air fan (for access to wiring harness).

3. Remove control unit and disconnect connectors for control unit
(refer to page 68 - 58).

4. Disconnect connectors:

- LH front sensor (next to Centr. Electr. Syst.)

- Contact unit (below dashboard)

- RH front sensor (next to control unit)

- 2-pin and 6-pin connector (in front of control unit)

Note

The safety bracket (orange) of the 6-pin connector is destroyed during dismantling. When fitting the assembly, lock the connector with a new safety bracket (blue).

5. Disconnect wiring connection along wiring harness.

Printed in Germany – IV, 1992

Checking Airbag System Operation

1. **Functional check of airbag warning lamp.**
   Turn on ignition. The airbag warning lamp must light up for approx. 5 seconds*. If the warning lamp remains dim, check bulb and/or supply voltage.

2. **Functional check of error memory.**
   Turn on ignition and pull off fuse for instrument voltage supply for approx. 30 seconds. The airbag warning lamp must indicate an error.
   Read off error and check if error code 30 (airbag warning lamp: signal implausible error not present) is displayed.

Note

The central warning lamp must light along with the airbag warning lamp if an error is stored in the error memory.

3. Erase error memory.

4. Make sure that no covers, decals or similar items are fitted at the steering wheel and in the passenger airbag area.

5. Check components visually for damage and modifications.

6. After checking the system, confirm the check in the appropriate fields of the warranty and service booklet.

* As of manufacturing date 2 - 06 - 92: approx. 2.5 sec

Printed in Germany – VIII, 1993

Correct disposal of airbag units

Airbag units are pyrotechnic objects and can represent an environmental hazard on account of their character as explosion-risk bodies and because of the materials they contain. For this reason, airbag units which have not yet been ignited, or complete vehicles containing such units must not be treated as "normal" waste or disposed of on any other final refuse dumps.
To avoid possible misues, the airbag units must first be rendered harmless by electrical ignition, making sure that all the relevant precautions are complied with
In the case of airbag units incapable of igniting or if ignition cannot be carried out in safety, the airbag units must in all cases be returned to Porsche or to the relevant importer in their original spare part packs and by the usual transport channels.

Note

Any specific local or national regulations or legal verdicts which go beyond these instructions must be complied and given preference over these instructions.

Printed in Germany – IV, 1992

Safety measures

- Ignition and preparation should only be carried out by properky qualified personnel under the supervision of a second, responsible person.
- All other generally applicable accident prevention regulations must be complied with.
- Only ignite airbag units which are in original condition and properly installed.
- Ignite airbag units only in suitable open spaces.
- Use only the ignition equipment specifically intended for the purpose.
- First remove all loose objects from the airbag expansion area.
- Anyone likely to be affected should be warned about the noise in advance.
- Use the whole length of the ignition device's cable in order to maintain a safe distance from the airbag unit which is to be ignited.
- Do not connect the ignition device to the power source until everything else is ready.
- Position yourself and anyone else involved in front of the vehicle.
- Ignite the airbag unir with the vehicle's doors closed but the tailgate/trunk lid or side windows open.
- If ignition fails to occur, do not approach the vehicle until approx. 3 minutes have elapsed.
- Allow airbag units to cool down after ignition and observe them carefully.
- Avoid skin contact with airbag units which have been ignited.

Printed in Germany – IV, 1992

Tools

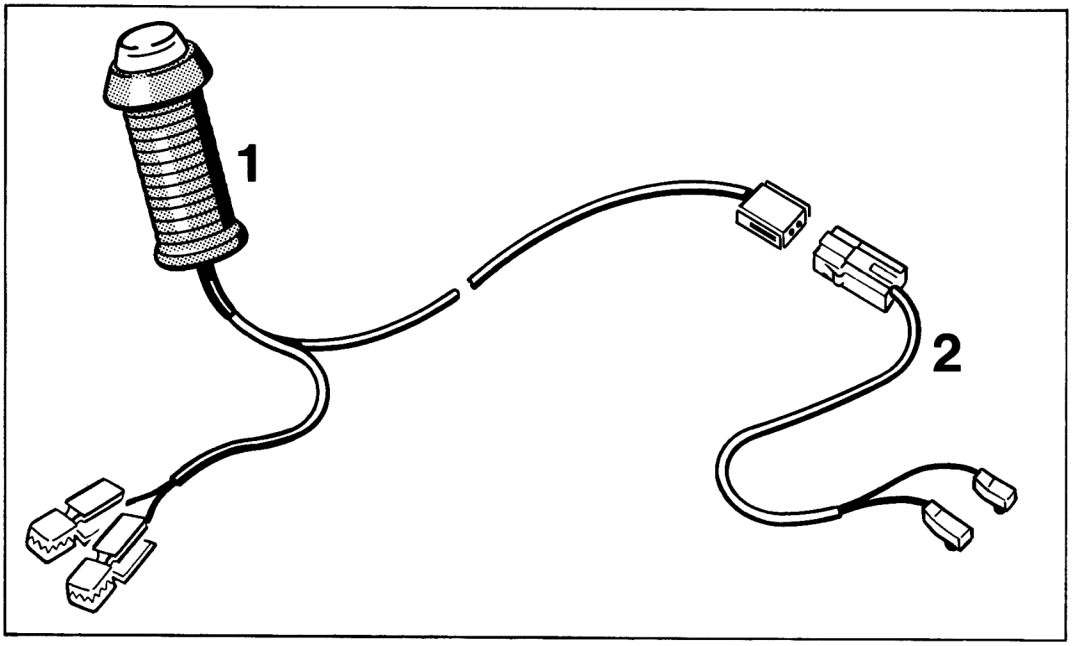

579-68

No.	Designation	Special tool	Order number	Explanation
1	Ignition device	9257*	000.721.925.70	
2	Ignition cable	9257/1*	000.721.925.71	Non-reusable part

* Order as required

Printed in Germany – IV, 1992

Connecting the ignition device

Driver's side

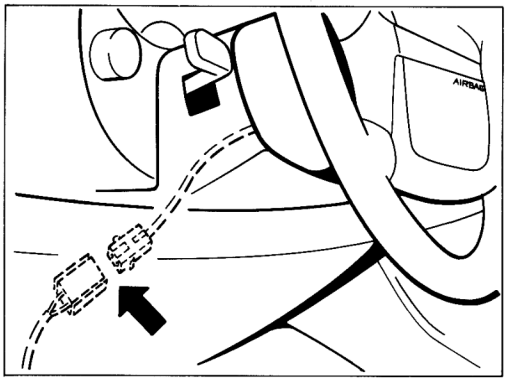

Direct to 2-pin plug of contact unit (below steering column).

Passenger's side

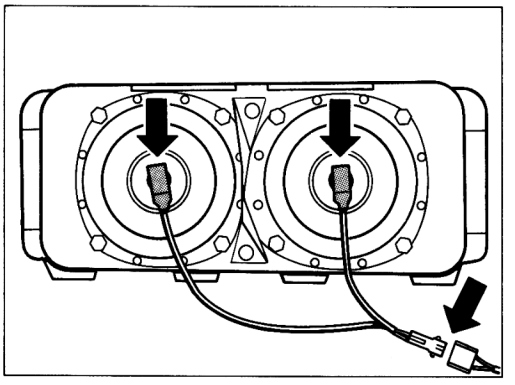

With ignition cable to both gas generators.

Run the ignition device out through the door gap to a point in front of the vehicle.

Printed in Germany – IV, 1992

Ignition

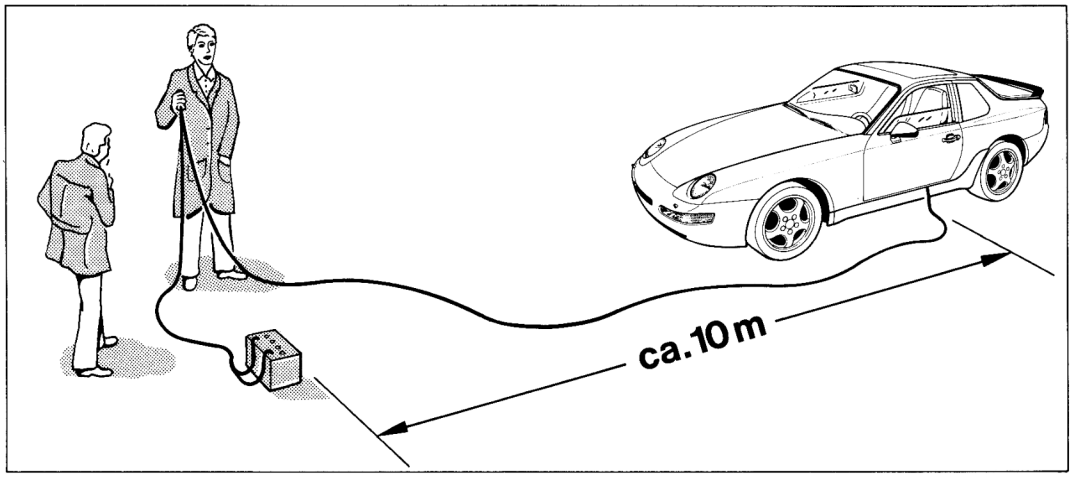

582d-68

Connect the ignition device to a car battery and operate the switch.

Note

The driver's side and passenger's side airbag units must be ignited separately.

After igniting the passenger's side airbag unit, check that both gas generators have ignited (can be identified by both ignition cable plugs having melted).

Printed in Germany – IV, 1992

Repairing horn buttons on airbag steering wheel

Removal

1. Remove airbag steering wheel (refer to page 68-53).

2. Lever out horn button with a small screwdriver.

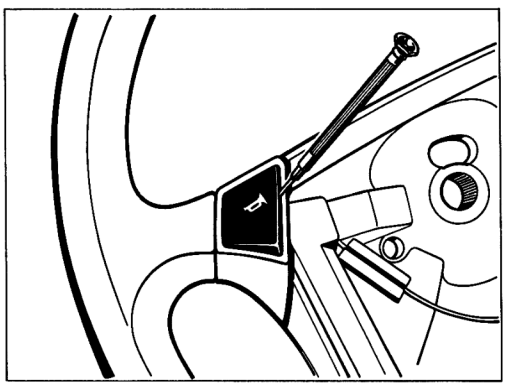

718-68

3. Take out contact spring.

Installation

Note

The silver contact in the middle of the contact spring must point downwards.

4. Insert contact spring into the guides.

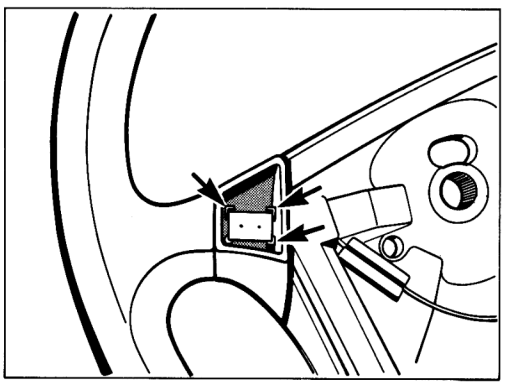

719-68

5. Engage horn button starting with the upper retaining lug, then press all the way in.

Note

Make sure all retaining lugs engage properly. When actuated, the horn button must spring back into its initial position lightly.

Printed in Germany – IV, 1992

Checking operation of the horn buttons.

6. Connect ohmmeter to the connector and to the steering wheel housing.

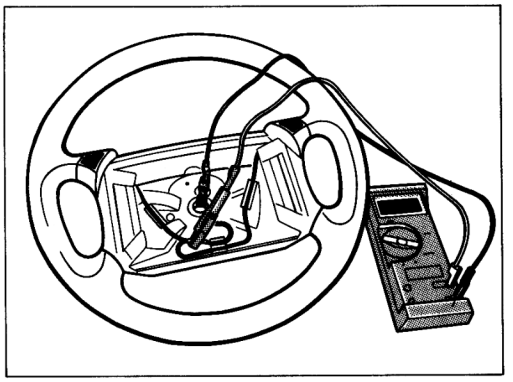

720-68

Display: ∞ Ω

Press horn buttons one after another.

Display: 0 - 5 Ω

Printed in Germany – IV, 1992

Diagnosis / Troubleshooting Airbag

Software level B 01

The airbag system is continuously monitored by a diagnosis unit in the control unit. If a fault occurs, it is indicated by a script in the instrument cluster.

In the event of a fault, the cental warning light and this script come on.

The airbag script comes on for approx. 5 seconds* after the ignition is switched on and then goes off again.

Should the warning lamp come on again later, this indicates a fault in the airbag system. The fault can be read out with System Tester 9288.

Note

The control unit needs approx. 70 seconds to identify all faults in the system, and the ignition must therefore be switched on for at least this time to ensure that all poosible sources of defects can be checked.

After a fault in the airbag system has been identified and rectified, **the fault memory must be erased.**

If any components are exchanged, this must be noted in the warranty and maintenance booklet. The document number should be attached in the free space provided. The document number is shown on an adhesive label which can be torn off the spare part.

** 2,5 seconds as of manufacturing date June 22, 1992.*

Following an accident in which the airbag system was activated, the following components must be removed and replaced:

– control unit

– both front impact sensors

– contact unit

– both airbag units

If non-activated airbag units have to be removed, they must be ignited electrically before being disposed of (see page 68 - 61).

Printed in Germany – XI, 1994

Before troubleshooting can be carried out correctly, the person concerned must be

- familiar with the component locations and the function and technical relationship of the systems to be checked (Model Information)
- be able to read and evaluate Porsche circuit diagrams
- understand the function of the electrical circuits and relays
- be capable of operating and assessing the information supplied by the test gear.

Important:

If the tester display indicates that a component is defective, the fault may not necessarily be found in the component indicated but may be in the associated control unit or the connecting circuits (electrical paths) between the component and the control unit. Before the fault memory has been read out, no troubleshooting involving the pulling off of plugs or similar is to be carried out, as this could also be stored as a fault in the memory.

Note

The fault code shows two types of fault:

– Fault still present

– Fault currently not present

Faults are stored as currently not present if they occur briefly while the ignition is switched on, but are no longer present when the ignition is switched off.

Faults still present are those which are permanent or remain present when the ignition is switched off.

Do not assume that the fault in the readout is actually present or clearly identifiable during the check.

A fault being memorized may for example be due to tampering with the airbag system wiring while the ignition was switched on.

Printed in Germany – IV, 1992

In the case of faults currently not present, it is also important to determine the cause of the fault in order to prevent it from recurring and to avoid replacing parts unnecessarily. Check the entire length of the airbag system wiring for damage (wires damaged or trapped).

Printed in Germany – IV, 1992

Tools

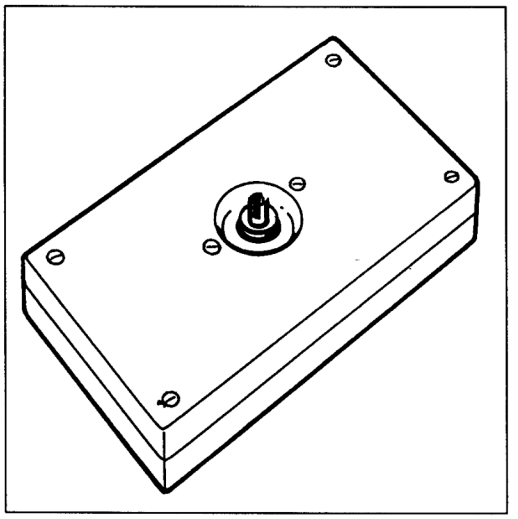

580-68

Special Tool 9516

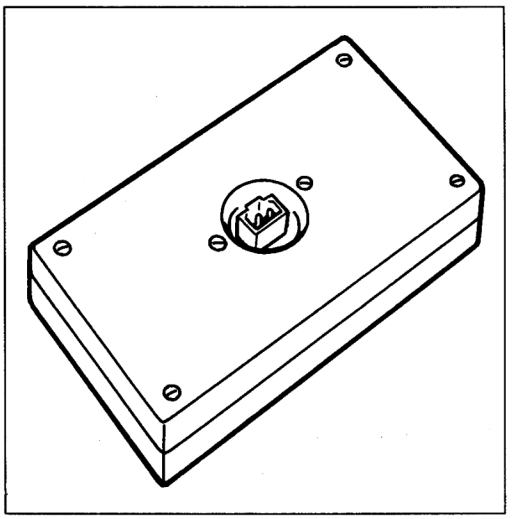

561-68

Special Tool 9516/1

Special Tools 9516 and 9516/1 are used to check the ignition pill circuits.

If there is a fault in the ignition pill circuits, attach Special Tool 9516 in place of the airbag units, then erase the fault memory. Switch the ignition off and on again.

The fault can then be identified by means of the diagnosis unit in the airbag control unit.

If the warning light no longer indicates a fault, the airbag unit is defective and must be replaced.

If the warning light again indicates a fault, the control unit or the wiring are at fault.

A fault in ignition pill circuit 1 may also be caused by the contact unit. Disconnect the wiring harness from the contact unit and attach Special Tool 9516/1 in place of the contact unit. Erase the fault memory. Switch the ignition off and then on again. If the warning light no longer indicates a fault, the contact unit is defective; if the warning light again indicates a fault, the control unit or the wiring are at fault.

Note

For safety reasons, never drive the vehicle with the special tools installed in place of the airbag units.

Printed in Germany – IV, 1992

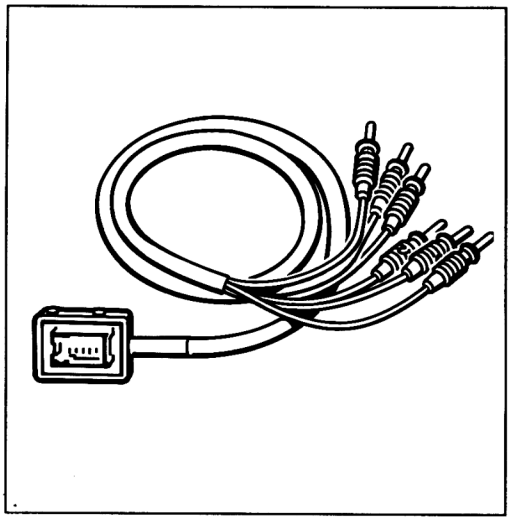

Special Tool 9541 1074-68

Special Tool 9541 is used to check the wiring of the airbag system. It is attached in place of the control unit. For safety reasons, the wiring to the ignition pills cannot be checked with this tool.

Printed in Germany – IV, 1992

1. Fault memory

Fault code table

Fault code	Designation of fault	
10	Ignition circuits	– closed once
		– closed several times
		– permanently closed
		– contact resistance to U_B
		– contact resistance to ground
		– coupled 1/3 or 2/3
11	Left front sensor	– resistance too high
12	Right front sensor	– resistance too high
21	Ignition pill circuit 1	– resistance too high / too low
22	Ignition pill circuit 2	– resistance too high / too low
23	Ignition pill circuit 3	– resistance too high / too low
30	Warning light airbag	– Signal implausible
31		– Control unit defective
40 to 47		– Control unit defective
50 to 54		– Control unit defective
60 to 62		– Control unit defective
70	Crash entry	– only if airbag has been triggered

Printed in Germany – V, 1992

Fault, Fault Code	Possible Causes, Elimination, Remarks

Note

After an airbag system fault has been detected and rectified, the fault memory **must** be erased.

Test point 1

Ignition circuits
closed once
Fault code 10

- Replace both front impact sensors.
- Check wiring harness for squeezed sections or chafing and replace if required.

Test point 2

Ignition circuits
closed several times
Fault code 10

- Refer to test point 1.

Test point 3

Ignition circuits
closed permanently
Fault code 10

- Refer to test point 1.

Test point 4

Ignition circuits
Contact resistance
to U_B
Fault code 10

- Check wiring harness to front impact sensors and ignition pills for squeezed sections and chafing. Replace if required.
- Using Special Tool 9541, check wiring to front impact sensors for short to positive terminal, replace if required.
- Check front impact sensors for short to positive terminal.
- If no fault can be detected at the front impact sensors and at the wiring, the control unit must be replaced.

Test point 5

Ignition circuits
Contact resistance
to ground
Fault code 10

- Check wiring harness to front impact sensors and ignition pills for squeezed sections and chafing. Replace if required.
- Using Special Tool 9541, check wiring harness to front impact sensors for short to ground.
- Check front impact sensors for short to ground.
- If no fault can be detected at the front impact sensors and at the wiring harness, replace the control unit.

Printed in Germany – IV, 1992

Fault, Fault Code	Possible Causes, Elimination, Remarks
Test point 6 **Ignition circuits** Coupled 1/3 or 2/3 Fault code 10	– Check wiring harness and ignition pills for squeezed sections and chafing. Replace if required. – If no fault can be detected, replace control unit.
Test point 7 **Left front sensor** Resistance too high Fault code 11	– Using an ohmmeter, check front impact sensor at connector. 1. Ohmmeter to terminals 1 and 2 Display: 10 kΩ 2. Ohmmeter to terminals 2 and 3 Display: 0...0.5 Ω – Check control unit wiring to front impact sensor connector with Special Tool 9541 and ohmmeter Display: 0...0.5 Ω – If no fault is detected at the front impact sensor and at the wiring, replace control unit.
Test point 8 **Right front sensor** Resistance too high Fault code 12	– refer to test point 7.

Printed in Germany – IV, 1992

Fault, Fault Code	Possible Causes, Elimination, Remarks

Test point 9

Ignition pill circuit 1
Resistance too high / too low
Fault code 21

1. Remove driver airbag – unit.
2. Attach Special Tool 9516 in place of airbag unit.

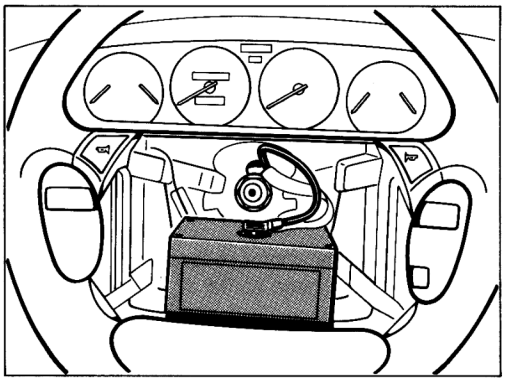

716-68

3. Erase fault memory.
4. Check if fault is still present.

   a) Replace airbag unit if the fault is no longer present.

   b) If the fault is still present, disconnect the contact unit wiring and attach Special Tool 9516/1.

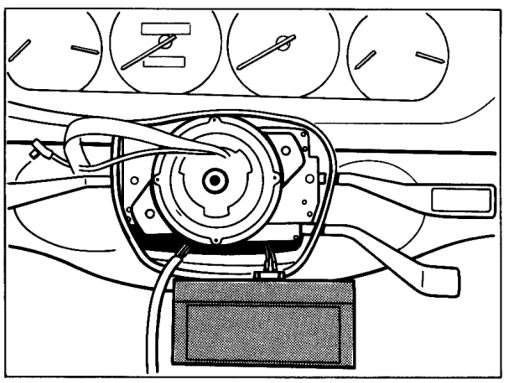

717-68

5. Erase fault memory.
6. Check if fault is still present.

   a) Replace contact unit if the fault is no longer displayed.

   b) If the fault is still present, check wiring harness for squeezed sections and chafing. Replace if required.

Printed in Germany – IV, 1992

Fault, Fault Code	Possible Causes, Elimination, Remarks
	c) If no fault is detected in the wiring harness, replace the control unit.
Test point 10 **Ignition pill circuit 2** Resistance too high/too low Fault code 22	Note Ignition pill circuit 2 at the passenger side airbag is the leftmost of the two circuits. 1. Disconnect plug at passenger side airbag unit. 2. Attach Special Tool 9516. 3. Erase the fault memory. 4. Check if fault is still present. a) If the faut is no longer present, replace passenger side airbag unit. b) If the fault is still present, check wiring harness for squeezed sections and chafing. Replace if required. c) If no fault is detected in the wiring harness, replace the control unit.
Test point 11 Ignition pill circuit 3 Resistance too high/too low Fault code 23	Ignition pill circuit 3 at the passenger-side airbag is the rightmost of the two circuits. – refer to test point 10.
Test point 12 Airbag warning light Signal implausible Fault code 30	– Check warning lamp, replace if required. – Check wire from control unit to instrument cluster or to diagnosis socket, respectively, for short to positive terminal. – Check instrument cluster.
Test point 13 **Control unit defective** Fault code ...	– Replace control unit. Note This fault message may display several fault codes: 31, 40 to 47, 50 to 54 and 60 to 62.

Printed in Germany – IV, 1992

Fault, Fault Code	Possible Causes, Elimination, Remarks
Test point 14:	
Unknown fault code fault code xxx	– Check secondary ignition circuit. – Erase fault memory.

Printed in Germany – IV, 1992

Fault, Fault Code	Possible Causes, Elimination, Remarks

2. Failure time

The Failure Time menu item displays the time elapsed since the first fault was stored in the fault memory.

The maximum time that can be displayed is 99 hours and 59 minutes. If this time is exceeded, the " > " sign is displayed ahead of the hours.

3. Results

The Results menu item displays the crash data.

Printed in Germany – IV, 1992

Checking seat heating

1. Remove switch cover (4 screws).

2. Disengage seat heating switch and pull out switch (take care not to damage the wire).

3. Switch on ignition.

4. Connect voltmeter to term. 1 (positive) and term. 2 (negative).

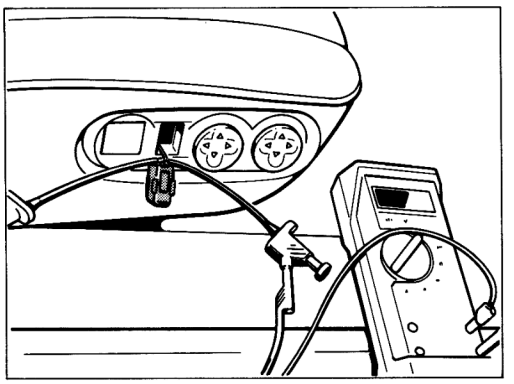

1343 - 72

Display: approx. 5 V

Note

If no voltage is displayed, check power supply according to wiring diagram.

5. Connect voltmeter to term. 2 (negative) and term. 3 (positive).
   Display, depending on potentiometer setting: approx. 2 - 3 V

6. Push tip switch into "on" position and keep it in this position.
   Display: approx. 5 V

7. Push tip switch into "off" position and keep it in this position.
   Display: approx. 0 V

8. Turn knurled wheel of potentiometer all the way up.
   Display: approx. 3 V

9. Turn knurled wheel of potentiometer all the way down. The voltage must then drop to approx. 2 V.

10. Remove seat and connect to Special Tool 9269.

11. Switch on seat heating and set to maximum heating output.

12. Measure voltage at 2-pin connector marked with digit 3.

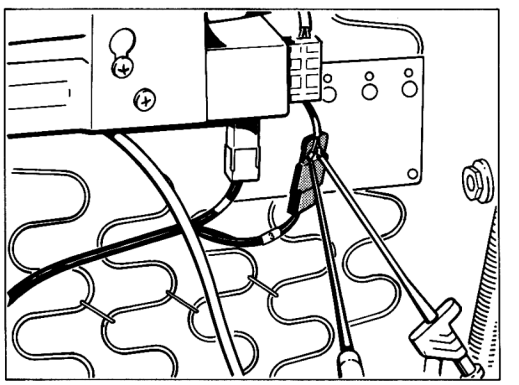

1344 - 72

When the seat heating is switched on, the voltage oscillates between 0 V and approx. 12 V (clocked voltage).

Printed in Germany – VIII, 1993

Checking resistance of heater elements

Note

Use a digital ohmmeter for the measurements.

1. Disconnect connector marked with digit 3.

2. Zero out ohmmeter.

3. Connect ohmmeter on pin side.
   Display at 20° C ambient temperature:
   1.5 to 1.8 Ω

Printed in Germany – VIII, 1993

Calibrating controllable seat heating

Control units

Note

The seat heating must be calibrated after the control unit or heating elements have been replaced.

Installation position

At the bottom of the seat

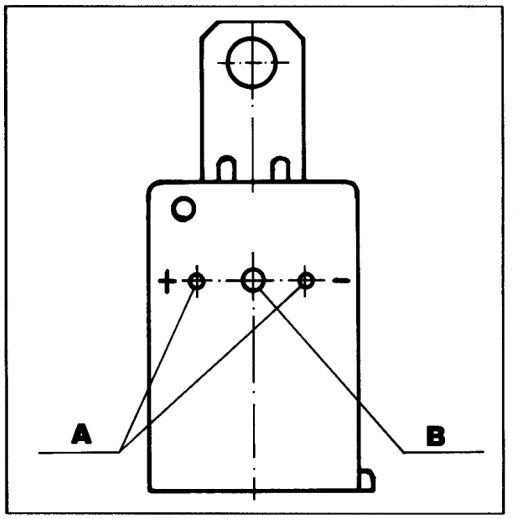

165 - 72

Control unit for seat heating

A - measuring point (V)
B - calibration potentiometer

Printed in Germany – VIII, 1993

Tools

1. Digital–voltmeter with an internal resistance (Ri) ≥1 MΩ.
2. Two measuring probes with a maximum diameter of 2 mm.
3. Thermometer (as recommended in the Workshop Handbook).
4. 2 mm wrench.
5. Two auxiliary cables to supply voltage to the removed seat (terminals15 and 31). Use adapter cable 9269 for seat-position control.

Calibration procedure

1. Store the seat to be calibrated in the working area until it has assumed the ambient temperature.
2. Provide power supply.

Note

Do not switch on the seat heating. If switched on unintentionally, the seat must cool down until the heating elements have again adopted the ambient temperature.

3. Measure the ambient temperature and refer to the table for the relevant voltage value.
4. Connect the voltmeter to the control unit (A).
5. Set the voltage value on the calibration potentiometer (B) so that it corresponds to the appropriate value for the ambient temperature.

Table

Ambient temperature in°C	Voltage in V
0	1.50
2	1.55
4	1.60
6	1.65
8	1.70
10	1.75
12	1.80
14	1.85
16	1.90
18	1.95
20	2.00
22	2.05
24	2.10
26	2.15
28	2.20
30	2.25
32	2.30
34	2.35
36	2.40
38	2.45
40	2.50
42	2.55
44	2.60
46	2.65
48	2.70

Functional check

Switch on seat heating for approx. 10 sec. with maximum heating power. After switching off, measure the voltage at the control unit. The value measured now must be considerably higher.

Printed in Germany – VIII, 1993

page

The assembly operations on the air conditioning system as of MY '92 are described in the Repair Manual of the 944 model, Vol. III, Repair Group 87.
Refrigerant R 12 up to MY '92
Refrigerant R 134a as of MY '93

Air Conditioning

Technical data of air conditioning system as of MY '93 . . . . . 87 - 1
Pressure and temperature specifications . . . . . 87 - 3

Radio, Telephone, In-board Computer

Removing and installing antenna . . . . . 91 - 1

Exterior Lights, Lamps, Switches, outside

Adjusting the pop-up headlight mechanical system . . . . . 94 - 1
Checking headlight beam adjuster . . . . . 94 - 5

Instruments, Fuel Gauge, Alarm System

Diagnosis / troubleshooting alarm system . . . . . D90 - 1

Printed in Germany - XII, 1994

Technical data of air conditioning system

As of MY '93

Refrigerant charge 860 g refrigerant **R 134a**

Refrigerant oil in compressor 120 ± 20 c.c. ND 8

Tightening torques for refrigerant lines

Outside thread dia.	TPI	Tightening torque, Nm (ftlb.)
5/8"	18 UNF	17 ±3 (13 ±2)
3/4"	16 UNF	24 ±4 (18 ±3)

Hexagon head bolts	Thread	Tightening torque, Nm (ftlb.)
Evaporator	M 6	6 (4)
Compressor	M 8	28 (21)

Pressure switch to refrigerant line 3 Nm (2 ftlb.)

Note

When fitting the refrigerant line, coat the fittings and O-rings lightly with refrigerant oil.

The refrigerant oil must be **disposed of as hazardous waste.**

Printed in Germany - XII, 1994

Pressure and temperature specifications

Refrigerant R 134 a

General testing requirements:

– V-belt tensioned correctly.

– Magnetic clutch energized.

– Condenser clean.

– Sunroof, doors and windows closed

1. Switch on A/C system.

2. Set temperature selector to max. cooling.

3. Set fresh-air blower to stage 4.

The pressures and temperatures indicated in the below diagrams must be reached after a running time of approx. 10 min and at a speed of 2,000 rpm with the compressor switched on.

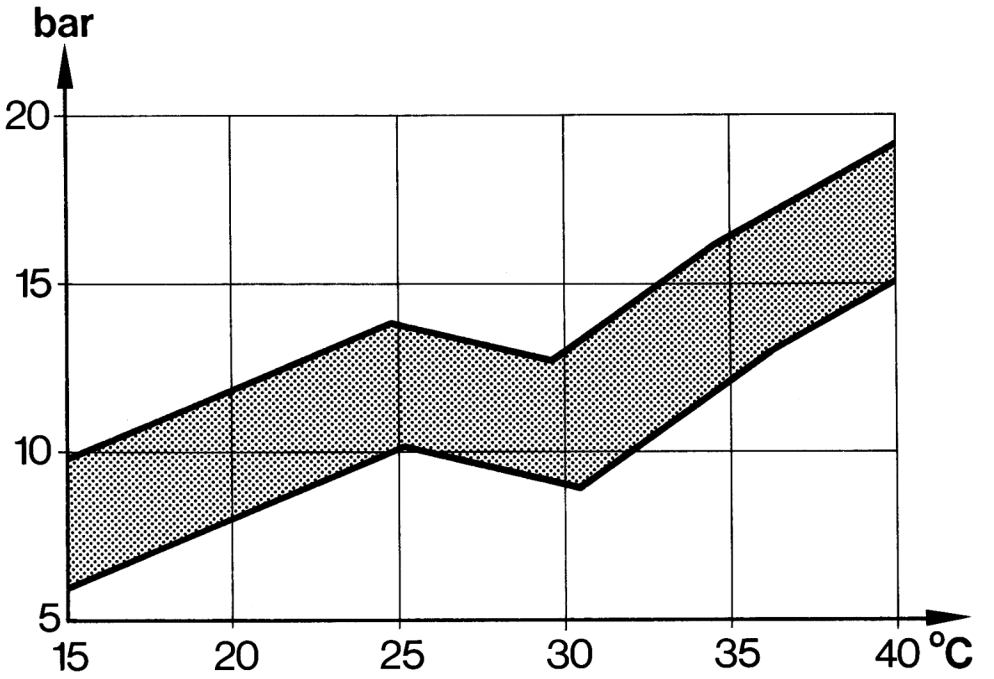

High pressure in refrigerant circuit vs. ambient temperature

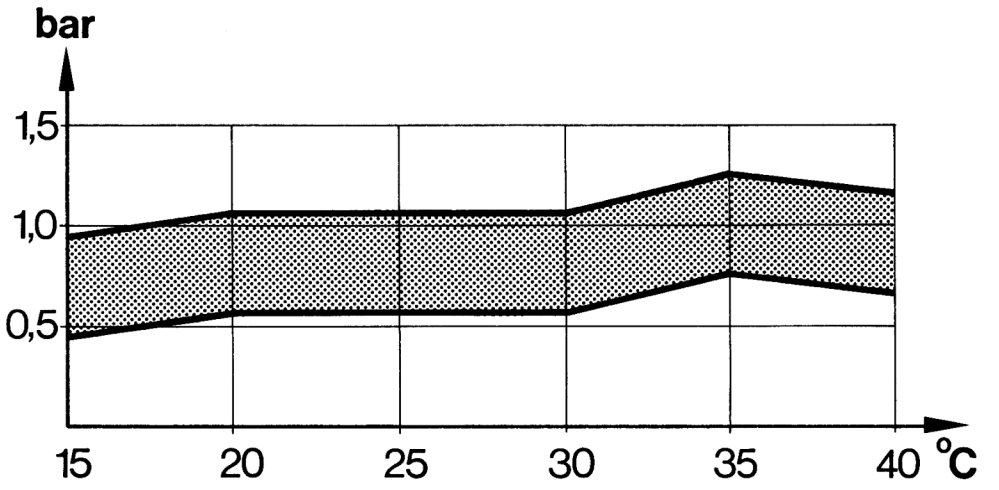

Low pressure in refrigerant circuit vs. ambient temperature

Temperature at center nozzle

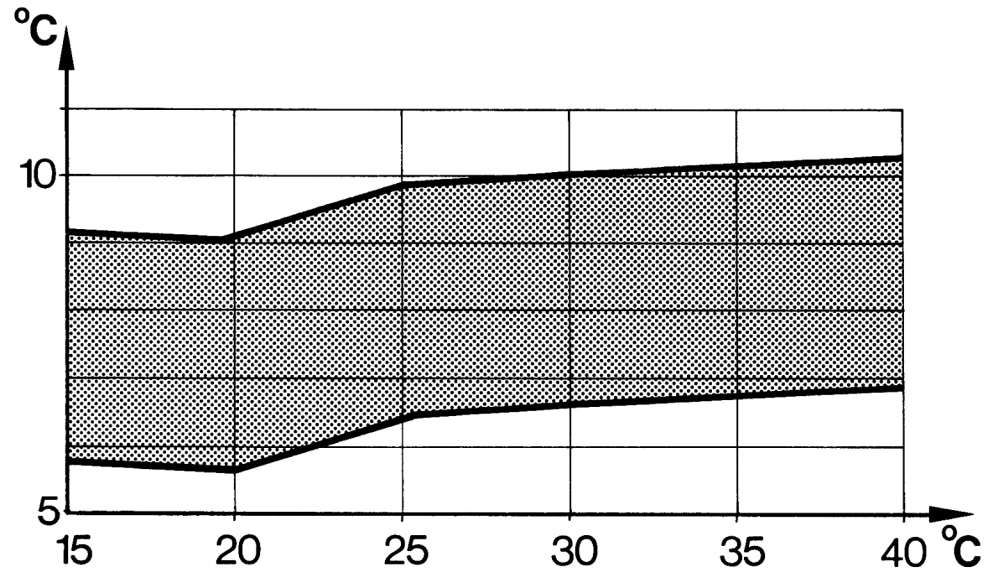

Air temperature at center nozzle vs. ambient temperature

Printed in Germany – VIII, 1993

Removing and installing antenna

Vehicles with sun roof

1. Take out sun roof.

2. Remove cover.

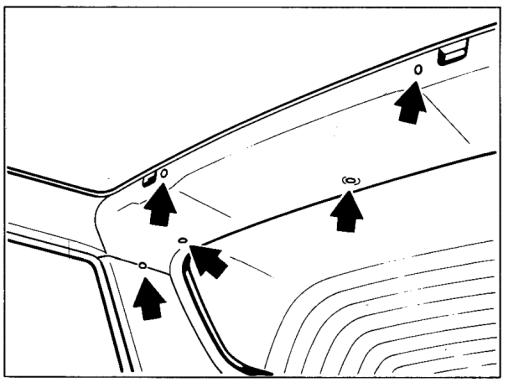

1248-91

3. Cut out roof liner in antenna area at right angles to the direction of travel at a length of approx. 15 cm.

Vehicles without sun roof

1. Open rear cover.

2. Remove upper section of weatherstrip of rear cover.

3. Detach roof liner in spotweld flange area.

4. Disconnect connector.

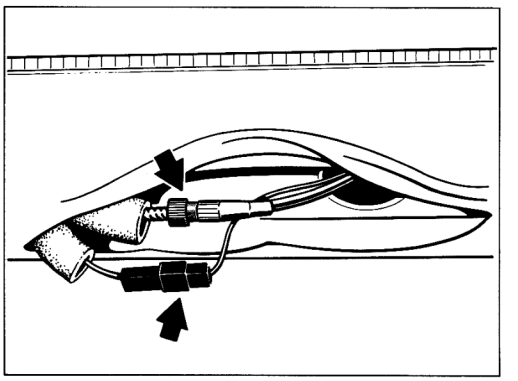

1249-91

5. Undo screw connection of antenna wire.

6. Undo mounting nut with double socket (17 mm A/F).

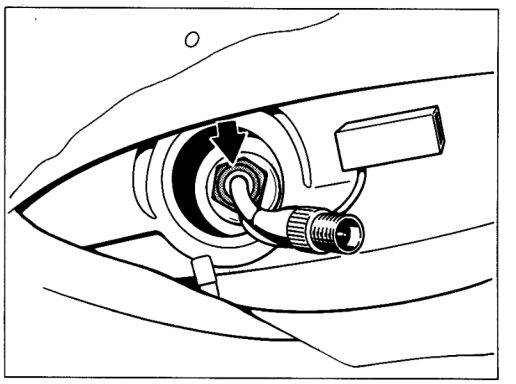

1250-91

Printed in Germany – VII, 1992

Adjusting the pop-up headlight mechanical system

Note

The installed pop-up headlight assembly is comprised of:

1. Sheetmetal console; fitted to body
2. Joint rod; provides link between return lever and rotary support
3. Mounting saddle of electric motor
4. Headlights with hood
5. Rotary support
6. Electric motor with deflection lever
7. Cover ring

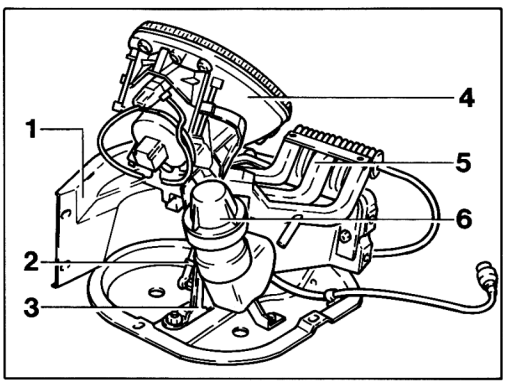

824-94A

Adjust the headlight in such a manner that the upper edge of the headlight does not protrude above the fender contours and that the headlight is centered with regard to the fender aperture. Make sure the left-hand and right-hand headlights are adjusted in the same way.

The headlight position with regard to the fender aperture is adjusted with the headlight folded down:

1. In longitudinal axis of the vehicle: at the console.

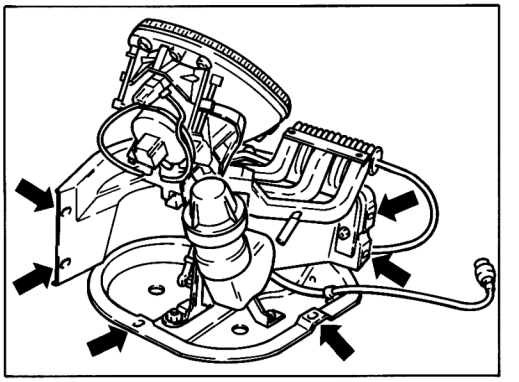

Headlight assembly is removed 824-94B

2. In lateral axis of the vehicle: across the headlight.

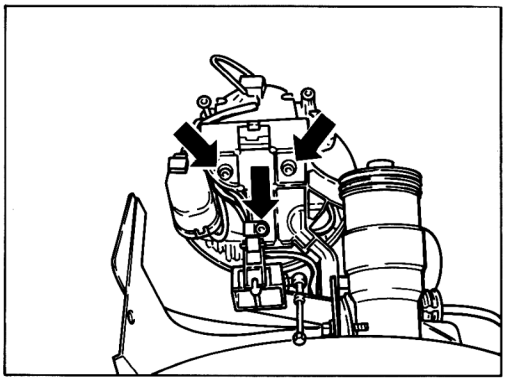

Headlight assembly removed 825-94

Printed in Germany – II, 1991

3. In vertical direction: across the rotary support.

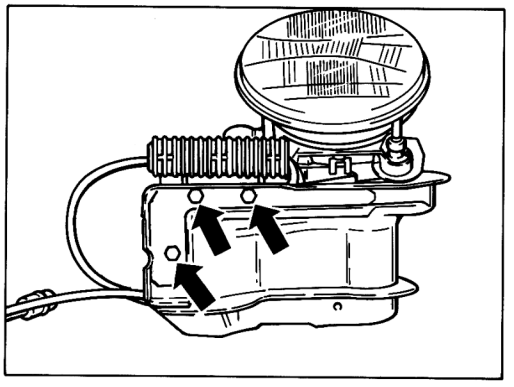

Headlight assembly removed 826-94

Basic adjustment of joint rod

The basic adjustment dimension of the joint rod is 103 mm.

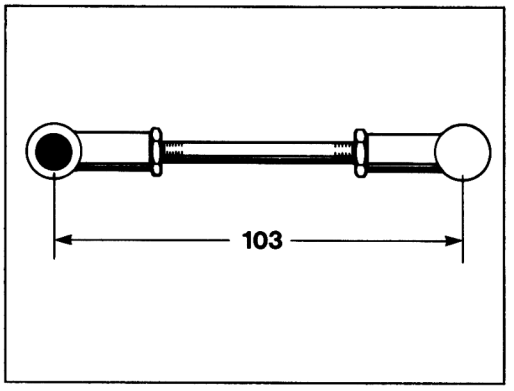

827-94

Note

The ball joints are offset by 180°.
If required, the joint rod length may be adjusted from approx. 97 mm to max. 111 mm.

Adusting the deflection lever and joint rod

Note

The headlight motor must be in the "pop-up headlights raised" position. Move motor electrically in this position.
Tighten the deflection lever to the motor in such a manner that it forms a straight line with the joint rod and is in the position just ahead of the top dead center.
Tightening torque: 10 Nm (7 ftlb)

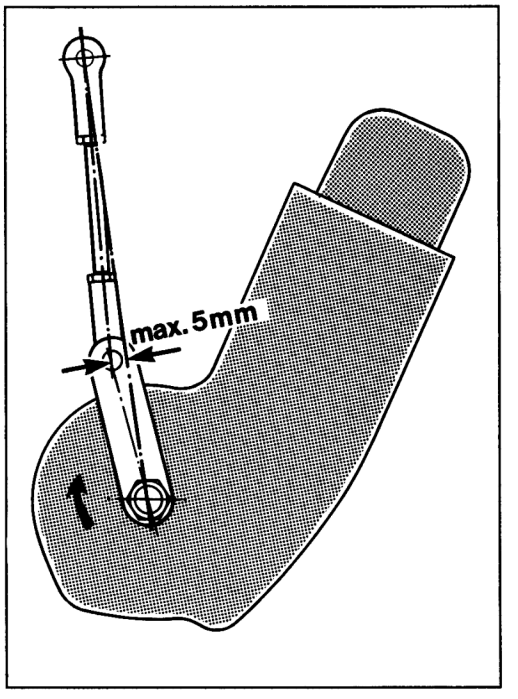

828-94

Note

The pop-up headlight motors rotate in different directions:

– The left-hand motor rotates clockwise

– The left-hand motor rotates counter-clockwise

Printed in Germany – VIII, 1993

Adjustment of end stop and rotary support

Note

To prevent the headlights from vibrating, the rotary support must be preloaded slightly when it is up against the end stop.

1. Raise headlights.

2. Remove cap at pop-up headlight.

3. Mark motor position on knurled wheel.

4. Turn back 2 turns at the knurled wheel.

5. Adjust stop so that the rotary support is up against the stop without play as well as without preload.

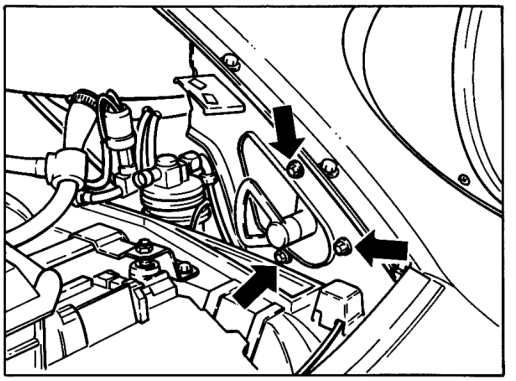

829-94A

Note

If the adjustment range of the end stop is not sufficient, adjust at the joint rod.

Adjusting the cover ring

To adjust the cover ring with reference to the fender aperture, raise the pop-up headlights. Adjust the cover ring so that it is centered with regard to the fender aperture.

Printed in Germany – II, 1991

Checking headlight beam adjuster

1. Switch on headlights.

2. Unlatch headlights and turn into fitting position.

3. Disconnect both connectors from actuators.

4. Measure voltage between term. No. 1 (positive) and term. No. 3 (negative).

Display: Battery voltage

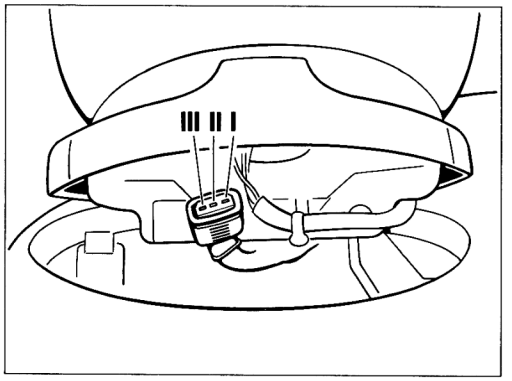

1397 - 94

If no voltage is present at the terminals, check power supply according to wiring diagram.

Note

The battery voltage must be between 11 V and 13 V when the check is made. If the voltage reading is lower, recharge battery.

5. Voltmeter to term. 1 (positive) and term. 2 (negative).

Display:
Potentiometer in position 0: approx. 0 V

Potentiometer in position 1: 2.5 V to 3.0 V

Potentiometer in position 2: 4.2 V to 5.0 V

If the values are not reached, check directly at the connector to the potentiometer.

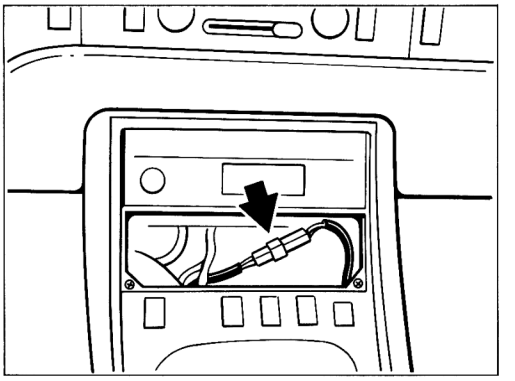

1398 - 94

Printed in Germany - VIII, 1993

Adjustment of headlights fitted with headlight beam adjuster

Note

Basic headlight adjustment is carried out in position 0.

1. Switch on headlights.

2. Adjust headlights with the vehicle in roadworthy condition using a headlight aimer.

- Fuel tank full.
- Driver's seat loaded with one person or 75 kgs.
- The tire pressure must meet the specifications.

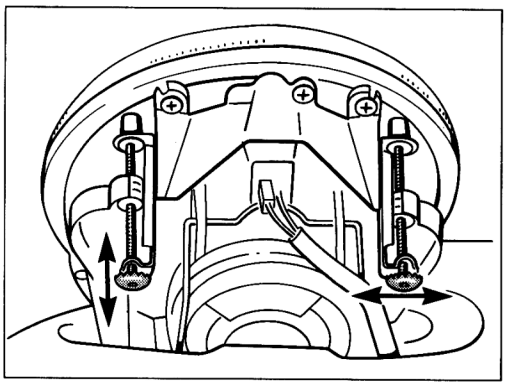

842 - 03

Lowering in position 0:
10 cm on 10 m

Lowering in position 1:
15 cm ± 1 cm on 10 m

Lowering in position 2:
25 cm ± 1 cm on 10 m

Potentiometer position of headlight adjuster relative to load state

968

Position 0:
1 or 2 persons without luggage.

Position 1:
3 or 4 persons without/with luggage.

Position 2:
1 or 2 persons with luggage.

968 CS

Position 0:
1 or 2 persons without luggage.

Position 1:
2 persons with luggage.

Position 2:
1 person with luggage.

Printed in Germany - VIII, 1993

Diagnosis / troubleshooting alarm system

The alarm control unit is diagnosable. It can be read out only with System Tester 9288.

The menu includes the following functional groups:

- Fault memory
- Drive links
- Input signals
- Country codes
- Results
- System check

Note

For some of the faults, two types of causes must be distinguished:

- The fault displayed is an actual fault that has to be remedied.
- The fault displayed is a fault condition that has been caused deliberately, e.g. by leaving the open glove compartment open.

Troubleshooting requires that the person performing the tests

- is familiar with the location of components, function and technical relationship of the systems being tested (refer to Model Information)
- is able to read and evaluate Porsche wiring diagrams
- knows the functions of circuits and relays
- is capable of using testers and of evaluating the test results.

Tools required for troubleshooting:
Special Tool 9540

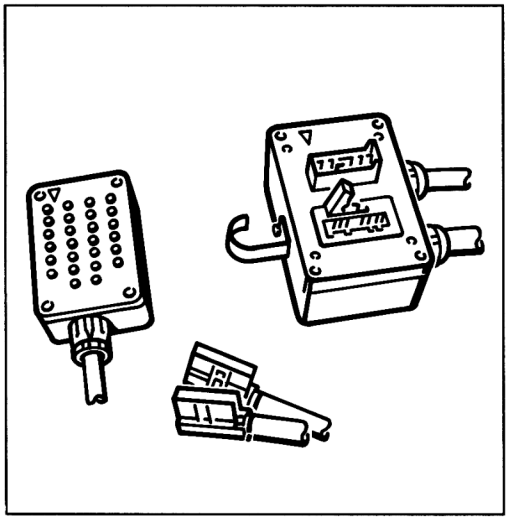

1079-90

Note

The Special Tool is required because connector II is fitted with miniature terminals.
To avoid damaging the terminals, always use the Special Tool for the tests.
When checking for continuity, attach connector to wiring harness only.
When checking signals and voltages, attach connector to wiring harness and control unit.

Printed in Germany – VII,1992

Pin assignments of alarm control unit connector

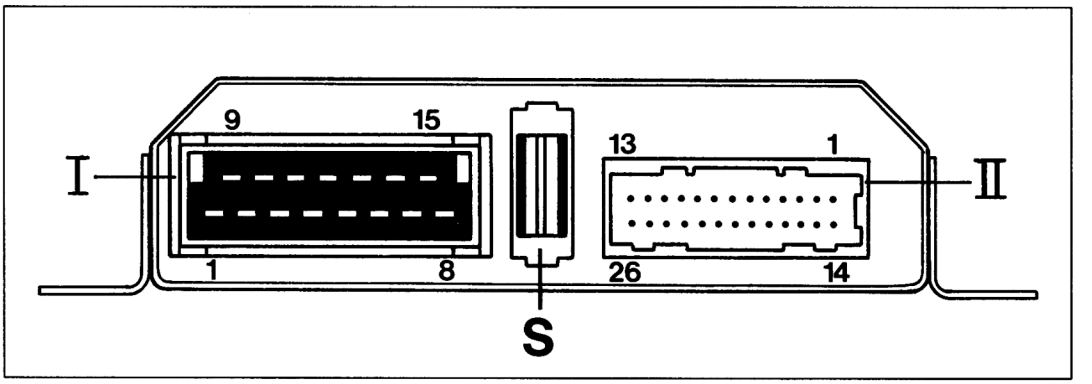

Connector I

Terminal:

1 – Term. 30
2 – Term. 31 (Ground)
3 – Term. 30
4 – Anti-drive off feature
6 – Term. 15
7 – Interior light
8 – Turn signal left
9 – Turn signal right
10 – Horn
11 – Motor „Closed" Actuator door lock
12 – Motor „Open" Actuator door lock
13 – Rear cover unlocking switch
14 – LED driver's door
15 – LED passenger's door

S – Fuse

Connector II

Terminal:

1 – Activate / closed
2 – Deactivate / open
5 – Luggage compartment contact
6 – Speedo signal Term. A
7 – Input 1
8 – Input 2
9 – Radio 2
10 – Central locking system position switch „Open"
11 – Central locking system button
12 – Central locking system position switch „Closed"
13 – Radio 1
14 – Diagnosis „L"
15 – Diagnosis „K"
16 – Glove compartment contact
17 – Input 3
18 – Term. 15
20 – Central locking system button light
21 – Door contacts
23 – Term. 61
24 – External electronics

Printed in Germany – VII,1992

Fault memory

Overview of possible displays

Control unit defective	Glove comp. open during activation
Voltage failure Term. 30 with active alarm system	Input 2 to ground during activation
Voltage failure during alarm output	Central lock button closed during activation
Position of the drives unplausible	Input 1 to ground during activation
Door(s) open during activation	Input 3 to positive during activation
Engine compartment open during activation	Position switch on drive closed during activation
Luggage comp. open during activation	Position switch on drive open during activation

Printed in Germany – VII,1992

Radio (closed loop) interrupted during activation

Radio contact to ground during activation

Tailgate lock switch closed during activation

Printed in Germany – VII,1992

Fault, Fault Code	Possible Causes, Elimination, Remarks

Note

After a fault in the alarm system has occurred and after it has been remedied, the fault memory **must** be erased.

Test Point 1

Control unit defective

- Replace control unit.

Test Point 2

Voltage failure Term. 30 with active alarm system

- Check battery.
- Check fuse at control unit.
- Check wiring according to wiring diagram.

Test Point 3

Voltage failure during alarm output

- Refer to Test Point 2.

Test Point 4

Position of the drives unplausible

This fault is also stored if, for example, the driver's door is open when the key is used to actuate the central locking system from the passenger's door.

- Disconnect plug II from control unit. Attach Special Tool 9540 at wiring harness.
  With the doors unlocked, ground must be present at pin 10.
  At the same time, no ground must be present at pin 12.
  With the doors locked, ground must be present at pin 12.
  At the same time, no ground must be present at pin 10.
- If required, check wiring according to wiring diagram.

  Note

  The wires are routed across connectors T 28 (driver's door) and T 27 (passenger's door).

Test Point 5

Doors(s) open during activation

- Check LH and RH door contact switches for shorts to ground.
- Check wire from alarm control unit plug II terminal 21 to the door contacts for short to ground, using Special Tool 9540.

Printed in Germany – VII, 1992

Fault, Fault Code	Possible Causes, Elimination, Remarks
	– Check wire from relay base gong relay of central relay terminal D for short to ground.
Test Point 6 Engine compartment open during activation	– Check engine hood contact switch for short to ground. – Check wire from alarm control unit plug II, terminal 5, to engine hood contact switch for short to ground using Special Tool 9540. Note The wire is routed across connector T 13. – The wire to the contact switch is routed across the Central Electrical System.
Test Point 7 Luggage comp. open during activation	– Check tailgate contact switch for short to ground. – Check wire from alarm control unit plug II, terminal 3, to contact switch for short to ground, using Special Tool 9540. Note Different wiring for Coupe and Cabriolet (refer to wiring diagram)
Test Point 8 Glove comp. open during activation	– Check glove compartment switch and glove compartment light for short to ground. – Check wire from alarm control unit plug II, terminal 16, to contact switch for short to ground, using Special Tool 9540.

Printed in Germany – VII, 1992

Fault, Fault Code	Possible Causes, Elimination, Remarks
Test Point 9 Input 2 to ground during activation	Note The fault display may appear if auxiliary systems (e.g. interior monitor) have been fitted. – Check auxiliary system of input 2. – Check wire from alarm control unit plug II, terminal 8, to auxiliary system for short to ground, using Special Tool 9540.
Test Point 10 Central lock button closed during activation	– Check central locking system button. – Check wire from alarm control unit plug II, terminal 11, to button for short to ground, using Special Tool 9540.
Test Point 11 Input 1 to ground during activation	– Check auxiliary system of input 1. – Check wire from alarm control unit plug II, terminal 7, to auxiliary system for short to ground using Special Tool 9540.
Test Point 12 Input 3 to ground during activation to positive	– Check auxiliary system of input 3. – Check wire from alarm control unit plug II, terminal 17, to auxiliary system for short to ground using Special Tool 9540.
Test Point 13 Position switch on drive closed during activation	– Check triggering of actuators. Ground must be present at connectors T27 and T28, terminals 1 and 7, in the quiescent state. Note Positive voltage must be present at terminal 7 when the actuator is triggered in "open" direction. Positive voltage must be present at terminal 1 when the actuator is triggered in "closed" direction. Check directly at actuators if required. Note The actuators are only triggered for several milliseconds.

Printed in Germany – VIII, 1993

Fault, fault code	Possible causes, remedies, notes
	– Check wires from alarm control unit plug I, terminals 11 and 12, to the acutators for continuity. – Check position switch at actuator (refer to Test Point 4).
Test Point 14 Position switch on drive open during activation	– Refer to Test Point 13.
Test Point 15 Radio (closed loop) interrupted during activation	– On radios that do not have this contact, radio 1 input is wired to ground. Check wire from alarm control unit plug II, terminal 13, for continuity to ground.
Test Point 16 Radio contact to ground during activation	– Check insulating strip on radio. – Check wire from alarm control unit plug II, terminal 9, to radio plug, terminal 6, for short to ground. – Check alarm contact at radio or bracket, respectively.
Test Point 17 Tailgate lock switch closed during activation	– Check rear cover unlocking switch. – Check lock switch for rear cover unlocking mechanism. – Check wiring from connector II, terminal 19, of alarm control unit to rear unlocking mechanism or lock switch of rear cover unlocking mechanism for short to positive.

Printed in Germany – VII, 1992

Drive links

This function allows the following components to be triggered:

- Function display in lock buttons
- Lock
- Alarm horn
- Turn signals
- Interior light
- Button light in central locking system button
- External output

```
Function display
1 = on
3 = off
Return :              N
```

If the function display is turned on, the doors are locked and the LEDs light up permanently. The „on" display flashes on the tester.
If the function display is turned off again, the LEDs are turned off as well. The doors are unlocked again when the user returns to the menu.

```
Lock
1 = closed
3 = open
Return:               N
```

Lock closed: Doors are locked.
Lock open: Doors are unlocked.

```
Alarm horn
1 = on
3 = off
Return:               N
```

Alarm horn on: Alarm horn is triggered continuously (continuous sound).

```
Turn signals
1 = on
3 = off
Return:               N
```

Turn signals on: All turn signals are triggered continuously (continously lit).

```
Interior light
1 = on
3 = off
Return:               N
```

The interior light must be in the door contact position.

```
Button light
1 = on
3 = off
Return:               N
```

Button light on: The light in the central lock system button is triggered.

```
External output
1 = on
3 = off
Return:               N
```

The external output is used to trigger other control units, e.g. ultrasonic monitoring of the interior.

Printed in Germany – VII,1992

```
Anti-drive-off feature
1 = on
3 = off
Return:              N
```

Anti-drive-off feature on: Activation of DME control unit terminal 15 is interrupted. It must no longer be possible to start the engine.

Printed in Germany – VII,1992

Possible fault displays

1.

```
No activation
Door(s) open !

Return:              N
```

– Close doors

– Check door contact wires to alarm control unit plug II terminal 21 for short to ground.

2.

```
No activation
Engine running!

Return:              N
```

– Turn off engine, only switch on ignition.

3.

```
No response
Signal unplausible !

Return               N
```

– Replace control unit.

4.

```
No activation
Fault summary!

Return:              N
```

Note

Fault summary is displayed if several drive links (actuators) are triggered simultaneously, e.g. if turn signals are on while the function display is checked.

– Check wiring to alarm control unit plug I, terminals 8, 9, 10, 11, 12, and plug II, terminal 20, for short to positive.

– Wires to alarm control unit
Check connector II, terminal 24 and terminal 7 (if connected) for short to ground.

5.

```
No activation
Fault summary !
Position switch ?
Return:              N
```

– Refer to item 4.

– Also check position switch (refer to page D 90- 5).

6.

```
Activation
correct.
Position switch?
Return:              N
```

– Check position switch (refer to page D 90 - 5).

7.

```
No response
Signal unplausible !
Position switch ?
Return:              N
```

– Check position switch (refer to page D 90 - 5).

– Replace control unit.

Printed in Germany – VII,1992

8.

```
Unknown
response code!

Return:              N
```

- Check following ground points:
- 1. GP VI: Battery to body (for RHD vehicles: GP VII)
- 2. GP IX: Body to engine
- 3. GP II: Body to alarm control unit

Input signals

This function allows the following input signals to be checked:

- Door contacts
- Engine compartment switch
- Luggage compartment switch
- Position switches at drive motors
- Central locking system button
- Glove compartment button
- Radio closed loop
- Alarm contact radio bracket
- Tailgate lock button
- Microswitch for activation of alarm
- Microswitch for deactivation of alarm
- Input 1 (auxiliary system)
- Input 2 (auxiliary system)
- Input 3 (auxiliary system)
- Speedo signal
- Term. 15
- Term. 61

1.

```
Door(s)

- open -
Return:              N
```

Open is displayed if at least one door is open.
Closed is displayed if both doors are closed.
If required, check wiring to alarm control unit for open circuit or short to ground according to wiring diagram.

2.

```
Engine compartment

- open -
Return:              N
```

Open is displayed if engine hood is open.
Closed is displayed if engine hood is closed.
If required, check wiring to alarm control unit for open circuit or short to ground according to wiring diagram.

3.

```
Luggage compartment

- open -
Return               N
```

Open is displayed if tailgate is open. Closed is displayed if tailgate is closed. If required, check wiring to alarm control unit for open circuit or short to ground according to wiring diagram.

4.

```
Position switch
open: - closed -
closed:  - open -
Return              N
```

This display appears if both lock buttons are in the „open" position.

4a.

```
Position switch
open: - closed -
closed:  - closed -
Return:             N
```

This display appears if one lock button is in the „open" and one lock button is in the „closed" position.

4b.

```
Position switch
open: - open -
closed:  - closed -
Return:             N
```

This display appears if both lock buttons are in the „closed" position. If required, check position switch (refer to page D 90 - 5)

5.

```
Central locking
system button
-  open -
Return:             N
```

Open is displayed if the central locking system button has not been pressed down. Closed display appears if the central locking system button is pressed down.

6.

```
Glove compartment

- open -
Return:             N
```

Open is displayed if glove compartment is open. Closed is displayed if glove compartment is closed.

7.

```
Radio
(closed loop)
- closed -
Return:             N
```

The closed loop must be closed. On radios that do not have this contact terminal, terminal 13, plug II, is wired to ground.

– If the closed loop is open, check wiring from alarm control unit, terminal 13, to ground point V or to radio for open circuit.

Printed in Germany – VII,1992

8.

```
Radio contact

- open -
Return:              N
```

If Radio contact closed is displayed:

- Check insulating strip on radio.
- Check wiring from alarm control unit plug II, terminal 9, to alarm contact at radio bracket or to alarm contact at CD player for short to ground.

9.

```
Tailgate lock

- open -
Return:              N
```

Note

The spare key is needed for the checks acc. to items 9 to 11 since the ignition must be engaged during the check.
Open is displayed if tailgate lock has not been actuated. Closed is displayed if tailgate lock is actuated.

10.

```
Activate
button
- open -
Return:              N
```

Use the spare key to turn the locks of the driver and passenger doors in the „closing" direction. The display must switch from open to closed.

- If closed is displayed in the off position, check wiring from lock cylinders to alarm control unit plug II, terminal 1, for proper grounding according to wiring diagram.
- If display remains in the open position after the lock cylinders have been actuated, check wiring for continuity according to wiring diagram.

11.

```
Deactivate
button
- open -
Return:              N
```

Use the spare key to turn the locks of the driver and passenger doors in the „opening" direction. The display must switch from open to closed.

If closed is displayed in the off position, check wiring from lock cylinders to alarm control unit plug II, terminal 2, according to wiring diagram for short to ground.

If display remains in the open position after the lock cylinders have been actuated, check wiring for continuity according to wiring diagram.

12.

```
Input 1

- open -
Return:              N
```

In the standard configuration, this input is not used. Auxiliary systems may be connected to this input.
Open is displayed if input is not used.
If required, check auxiliary systems according to manufacturer's instructions.

13.

```
Input 2

- open -
Return:              N
```

Refer to item 12.

14.

```
Input 3

- open -
Return:              N
```

Refer to item 13.

15.

```
Speedo signal

present
Return:              N
```

Display is not present if vehicle is stationary.
Display is present if vehicle is moving.
If required, check wiring from alarm control unit plug II, terminal 6, to speedometer according to wiring diagram.

16.

```
Term. 15

present
Return:              N
```

If display is not present, check wire from alarm control unit plug II, terminal 18, to central electrical system according to wiring diagram.

17.

```
Term. 61

present
Return:              N
```

Note

If **„present"** is displayed although the engine is not running, this may be due to a summary fault (refer to item 4, Drive links functional group). In this case, start by remedying this fault.
If display is not present although the engine is running, check wire from alarm control unit plug II, terminal 23, to generator according to wiring diagram.

Printed in Germany – VII,1992

Country codes

The System Tester 9288 may be used to encode three pre-set alarm versions

1. RoW (Rest of world)
2. CH (Switzerland)
3. USA

Alarm output

RoW

- Alarm horn max. 30 sec. interval.
- Turn signals max. 5 min.
- Interior light flashes in an asynchronous manner with turn signals (if in door contact position).

CH

- Alarm horn max. 30 sec. continuous.

USA

- Alarm horn max. 4 mins. interval.
- Turn signals max. 8 min.
- Interior light flashes in an asynchronous manner with turn signals (if in door contact position).

Alarm system encoding

When replacing the control unit, activate one of the preset country codes according to the national C number.

RoW

C numbers: 00, 05, 07, 09, 11, 12, 13, 14, 16, 17, 19, 20, 21, 22, 27, 28, 99.

CH

C number: 10.

USA

C numbers: 02, 04, 06, 08, 15, 18, 23, 24, 26, 31, 32, 36.

```
Country code
RDW    PORSCHE       *
1 = coding
Return:              N
```

The Country code menu displays the coded version in the top left corner, e.g. RoW; the center displays Porsche or Workshop, depending on where the system has been coded. The asterisk on the right is displayed for versions that include the interior lights in the alarm emission.

Result memory

The result memory registers triggering of an alarm, the contact that triggered the alarm as well as the type of activation. A maximum of 10 results may be stored. If another result is stored, the oldest result stored is deleted. The result with the highest number is the most up-to-date result.
Alarms may be triggered by contacts at the following components:

- Doors
- Engine compartment
- Luggage compartment
- Glove compartment
- Radio

Additional alarm triggering options:

- Term. 15 on after system has been activated
- Signal to input 1
- Signal to input 2
- Signal to input 3
- Position switch
- Open circuit of closed loop (radio).

Note

Up to three alarms may be triggered across input 2.

The following types of activation are to be distinguished:

- **normal,** i.e. locking the doors with the key, thus activating the central locking system
- **locking three times,** i.e. locking one of the door locks rapidly for three consecutive times
- **System check**

The type of activation may be invoked with button 1 on the below display:

```
Alarm:          - x -
activated by
xxxxxxxxxxxxxx
```

Note

Erase the result memory whenever the alarm system has been checked.

Printed in Germany – VII,1992

System check

The System check menu item may be used to check all components triggering an alarm (except Term. 15). In this case, the alarm horn is only triggered twice for a short interval.

The following display appears after the System check menu item has been called:

```
System check !

Continue:            >
```

The individual components that may trigger an alarm (except Term. 15) can now be checked. E.g. if a door is opened, an alarm is triggered. At the same time, triggering of the alarm is stored in the result memory. After the check has been completed and the > key has been pressed, the following display appears:

```
Note:
Erase result
memory !
Return:              N
```

The result memory **must** be erased since the check has been stored in the memory.

Printed in Germany – VII,1992

page

Wiring

Passenger compartment wiring harness for 968 CS . . . . . 97 - 01
Repairing the Tiptronic wiring harness . . . . . 97 - 03
Routing the sensor wire at the Tiptronic transmission . . . . . 97 - 07
Wiring diagram mod. '92 . . . . . 97 - 1
Wiring diagram mod. '93 . . . . . 97 - 31
Wiring diagram mod. '94 . . . . . 97 - 63
Wiring diagram mod. '95 . . . . . 97 - 95

Printed in Germany – XI, 1999

Passenger compartment wiring harness for 968 CS

When replacing the passenger compartment wiring harness, the spare wiring harness must be modified as only the harness for the 968 is supplied by the spares department.
Modifications are required at the clock connector.

1. Open 7-pin coupling housing (outside temperature indicator on 968) and remove wire.

2. Cut off terminal sockets of brown/blue and blue/green wires. Insulate wires and tie them aside.

3. Fit the remaining wires into 4-pin housing according to wiring diagram or below table (may be removed from old wiring harness).

   1 - green (Term. 15)
   2 - grey/green (Term. 58)
   3 - red/green (Term. 30)
   4 - brown (Term. 31)

4. Tie back wire for analog clock (center console).

Printed in Germany – VIII, 1993

Repairing the Tiptronic wiring harness

1. Disconnect battery.

2. Remove trunk floor carpeting.

3. Undo right-hand side trim in Tiptronic control unit area.

Note

Also remove vibration damper on Cabriolet vehicles.

4. Remove control unit.

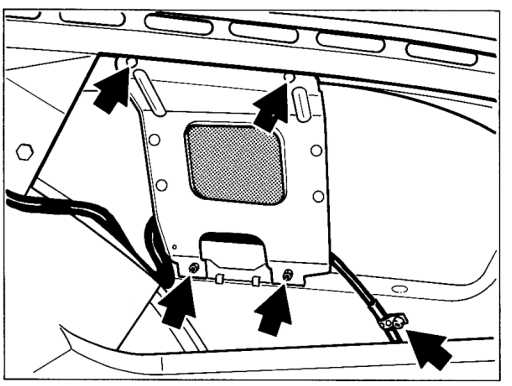

1657-97

5. Open tie-wrap.

6. Disconnect transmission wiring connectors.

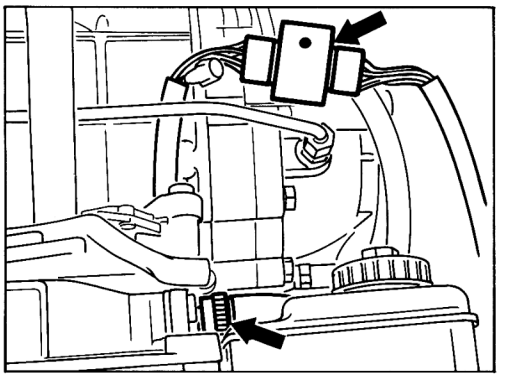

1144-37

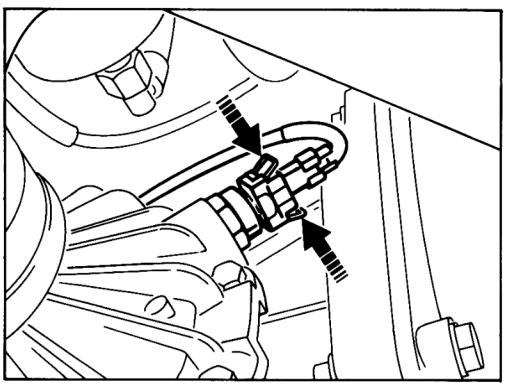

1262-38

7. Detach wiring harness from transmission and push it out across hole in passenger compartment.

Printed in Germany – XI, 1994

8. Cut off wiring harness to transmission at a distance of 310 mm from control unit connector.

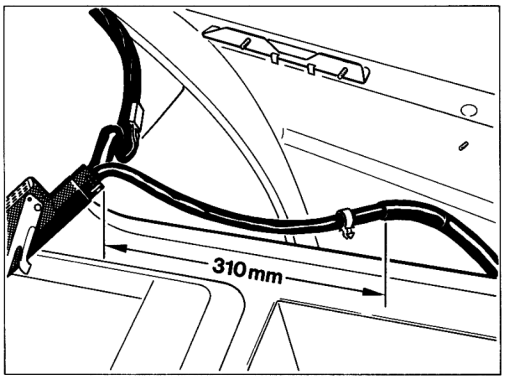

1658-97

9. Remove cloth tape along a length of approx. 30 mm.

10. Strip all wires (except sensor wire to speedometer) along a length of 4 mm.

11. Solder connectors to the following wires:

– red

– green

– red / white

– grey

– brown

– orange

– red / blue

– blue

Note

Identify the brown wire among three brown wires using an ohmmeter or a continuity tester. The brown wire required is routed to pin 44 of the Tiptronic control unit.

12. Equip the socket housing according to the below list and latch the housing:

1 – red

2 – green

3 – red / white

4 – grey

5 – brown

6 – orange

7 – red / blue

8 – blue

13. Solder connectors to the following wires:

– blue / yellow

– blue / white

– blue / black

– brown (2 times)

– yellow / brown

– grey / brown

– purple

Printed in Germany – XI, 1994

14. Equip pin housing according to the below list and latch the housing:

1 – blue / yellow

2 – blue / white

3 – blue / black

4 – brown

5 – yellow / brown

6 – brown

7 – grey / brown

8 – purple

15. Open control unit connector.

16. Push handle cover back onto wiring harness.

17. Cut sensor wire at a distance of 100 mm from the contact carrier.

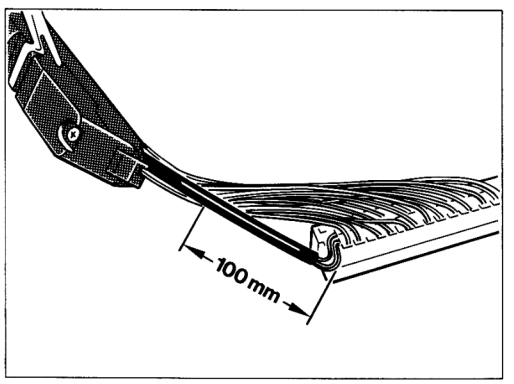

1659-97

18. Remove insulating sleeving.

19. Twist exposed shield, cut down to 60 mm and insulate with shrink-fit hose to a length of 10 mm.

20. Shorten brown wire to 80 mm and white wire to 70 mm and strip a length of 10 mm each.

21. Route sensor wire of repair wiring harness across handle cover and crimp with wires inside the connector.

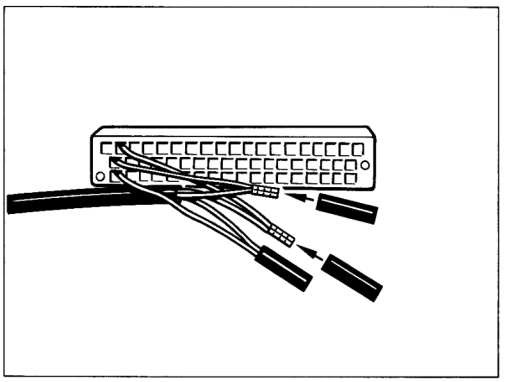

1660-97

Note

To facilitate identification, the Fig. shows the control wire only. The other wires are omitted.

22. Insulate crimp connectors with shrink-fit hose.

23. Reassemble control unit connector.

Printed in Germany – XI, 1994

24. Place control unit connector into position, connect repair wiring harness and Tiptronic wiring harness and fit Tiptronic control unit complete with bracket.

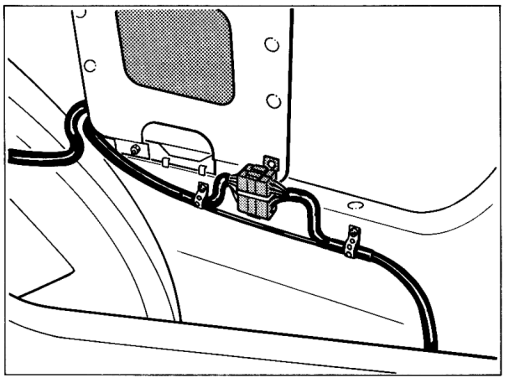

1661-97

25. Tie both joints together using a tie-wrap and attach to control unit bracket:

– Coupe: with sheet-metal nut and sheet-metal screw

– Cabriolet: with tie-wrap

Note

Observe wire routing modified with regard to standard routing (refer to Fig. 1661-97).

26. Connect sensor wire to transmission wiring harness using a length of tape.
Also attach wiring harness to tucker stud using a length of perforated tape.

27. Use "Drive links" menu on System Tester 9288 to check operation of solenoids and gear display.

28. Check operation of rpm sensor using the "Actual values" menu on System Tester 9288.

Printed in Germany – XI, 1994

Routing the sensor wire at the Tiptronic transmission

Note

Assembly of the sensor wire to the transmission has been modified. When repairing the Tiptronic wiring harness on vehicles featuring the former type of fitting, adopt the new fitting type.

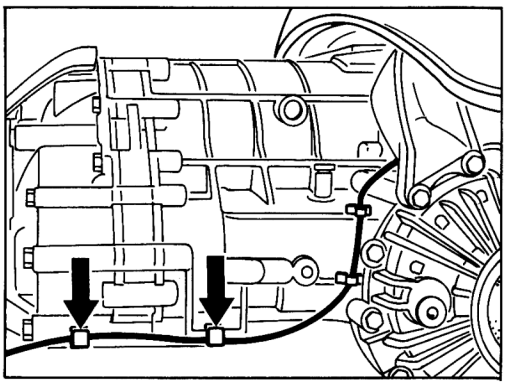

1795-97

1. Fit three wire clamps
   (Part No. 999 651 262 09).

2. Connect sensor wire to rpm sensor.

3. Attach wire with three wire clips
   (Part No. 999 651 162 40).

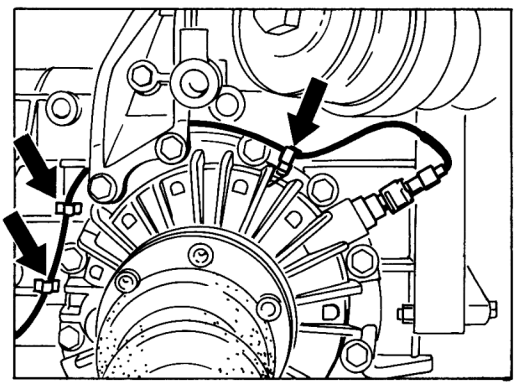

1794-97

4. Attach sensor wire with two U-clamps to the reinforcing webs of the transmission housing.

Printed in Germany – XI, 1994

Wiring Diagram Type 968 Model 92

	Coordinates	
Sheet 1	1 - 10	Lights
Sheet 2	11 - 20	Instrument Cluster and Sender
Sheet 3	21 - 30	Heating, Airconditioning, Ventilating, Power Seats, Wipe- and Wash Cleaners
Sheet 4	31 - 40	Two-Tone Horns, Mirrors, Lifting Roof, Power Window Regulator, Tailgate Unlocking
Sheet 4a	31 - 40	For vehicles as of VIN 96 NS 80 0102 RoW 96 NS 82 0067 USA
Sheet 5	41 - 50	Engine Compartment, Cruise Control
Sheet 6	51 - 60	Central Electric
Sheet 7	61 - 70	Central Locks, Alarm System
Sheet 8	71 - 80	Fog Light, Rear Fog Light
Sheet 9	81 - 90	Radio
Sheet 10	91 - 100	ABS, Airbag
Sheet 11	101 - 110	Wiring 968 Cabriolet
Sheet 12	111 - 120	Tiptronic
Sheet 13		Construction Components
Sheet 14		Plug Connections, Ground Points, M-Numbers

Wiring Diagram Type 968
Model 92

The wiring diagram consists of 12 individual wiring diagrams, 1 sheet construction components and 1 sheet plug connections and ground points. These are divided into coordinate fields.

Each individual wiring diagram contains a part of the central-electrics box in a dashdotted frame.

This part of the central-electrics box shows all the lines and relays necessary for the individual wiring diagram.

The earth/ground points are identified by "MP" and their location is shown in a vehicle diagram.

The 20-pin connectors on the central-electrics box are clipped together out of 5 parts.

Part 1, with the moduled-on fastening lug, is the "starting element".

Parts 2, 3 and 4 are "module elements".

Parts 1 to 4 are identified by the numbers 1.....5.

Part 5 is a "coding element".

The designations of the plug connections in the wiring diagram of the central-electrics box refer to the "starting element" from, for example, B 11.....15, and to the first module element from B 21.....25.

Printed in Germany – III, 1991

968 MODEL 92 SHEET 1

LIGHTS

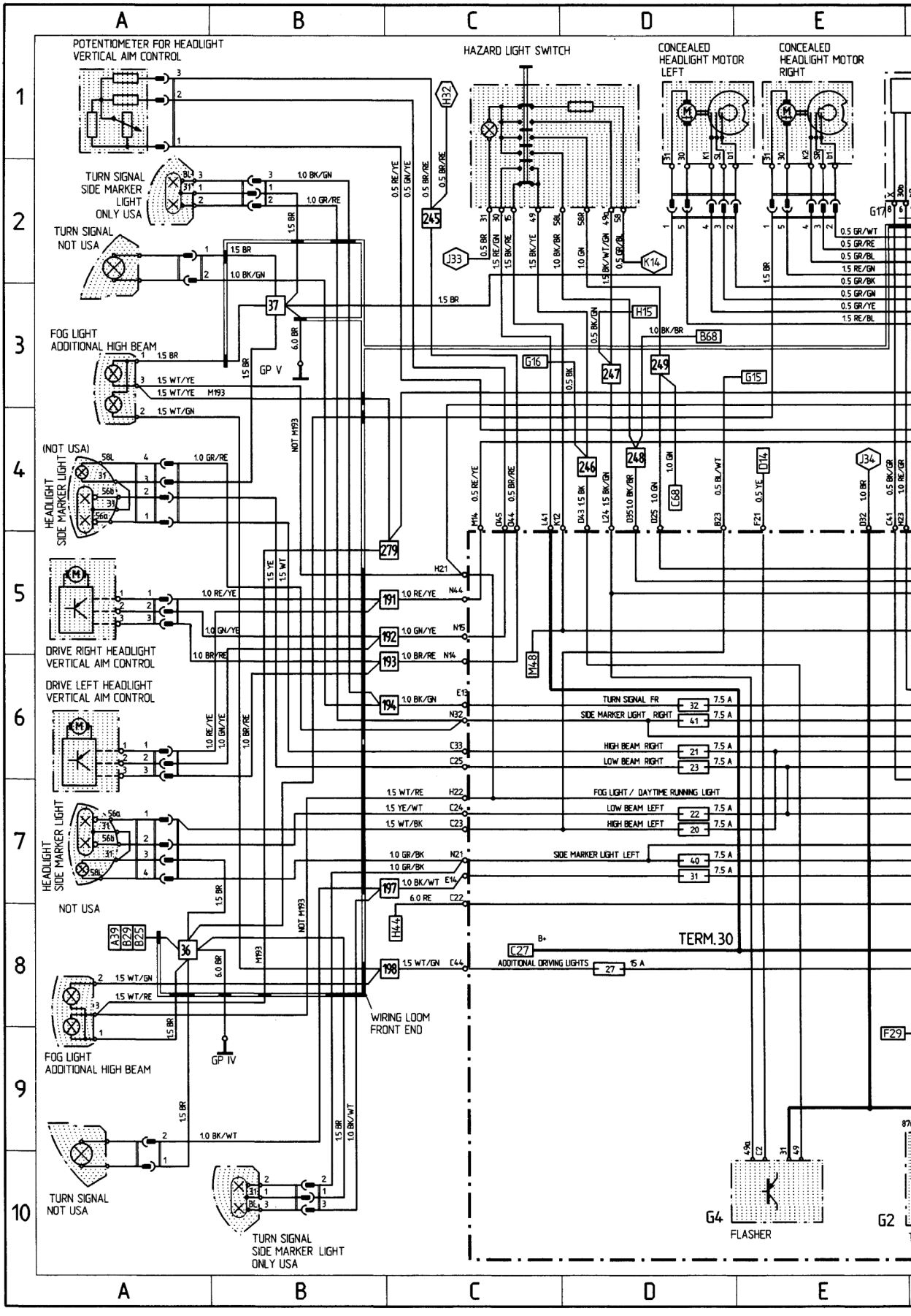

Printed in Germany - I. 1991

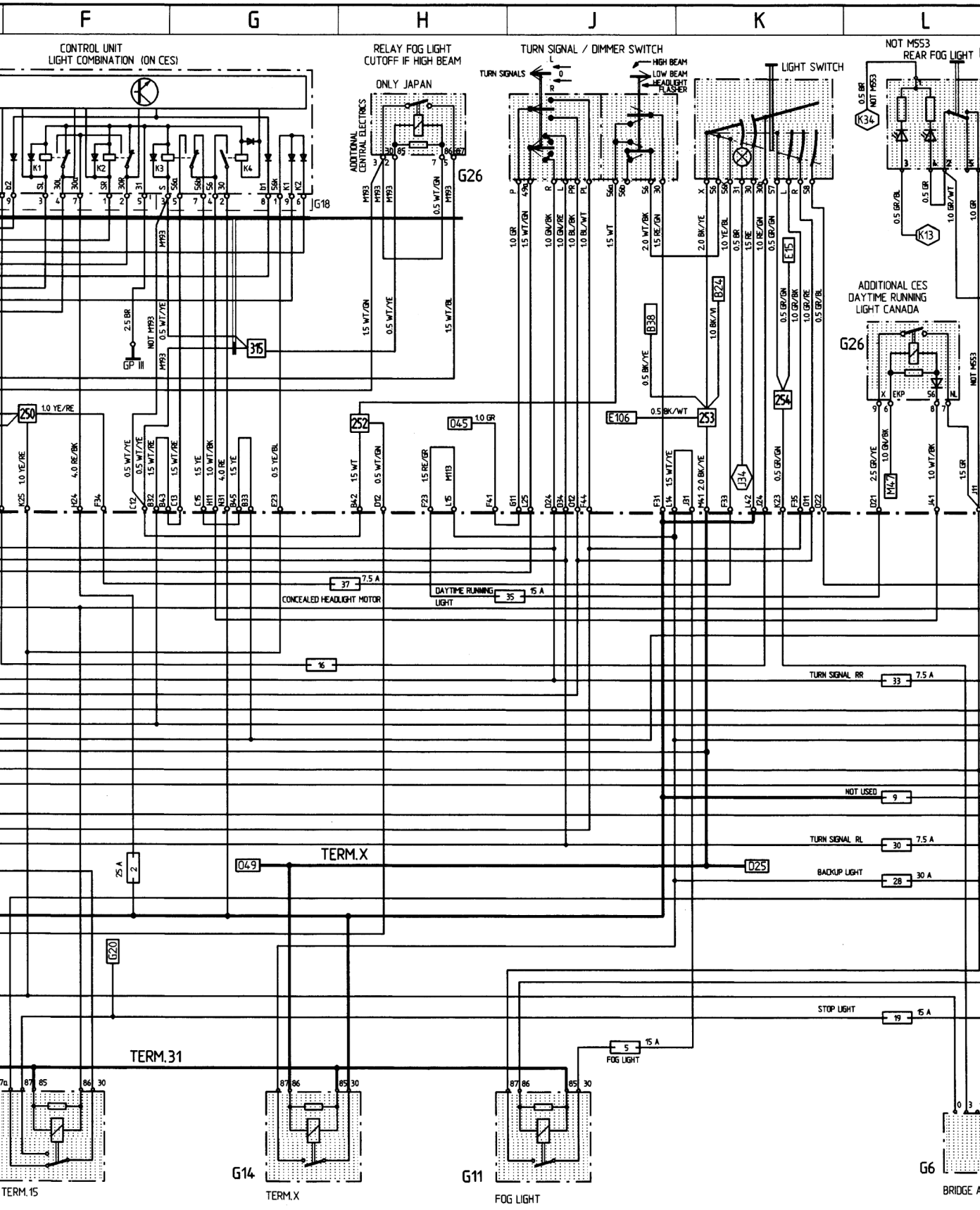

WT = WHITE YE = YELLOW RE = RED VI = VIOLET BL = BLUE GN = GREEN GR = GREY BR = BROWN BK = BLACK

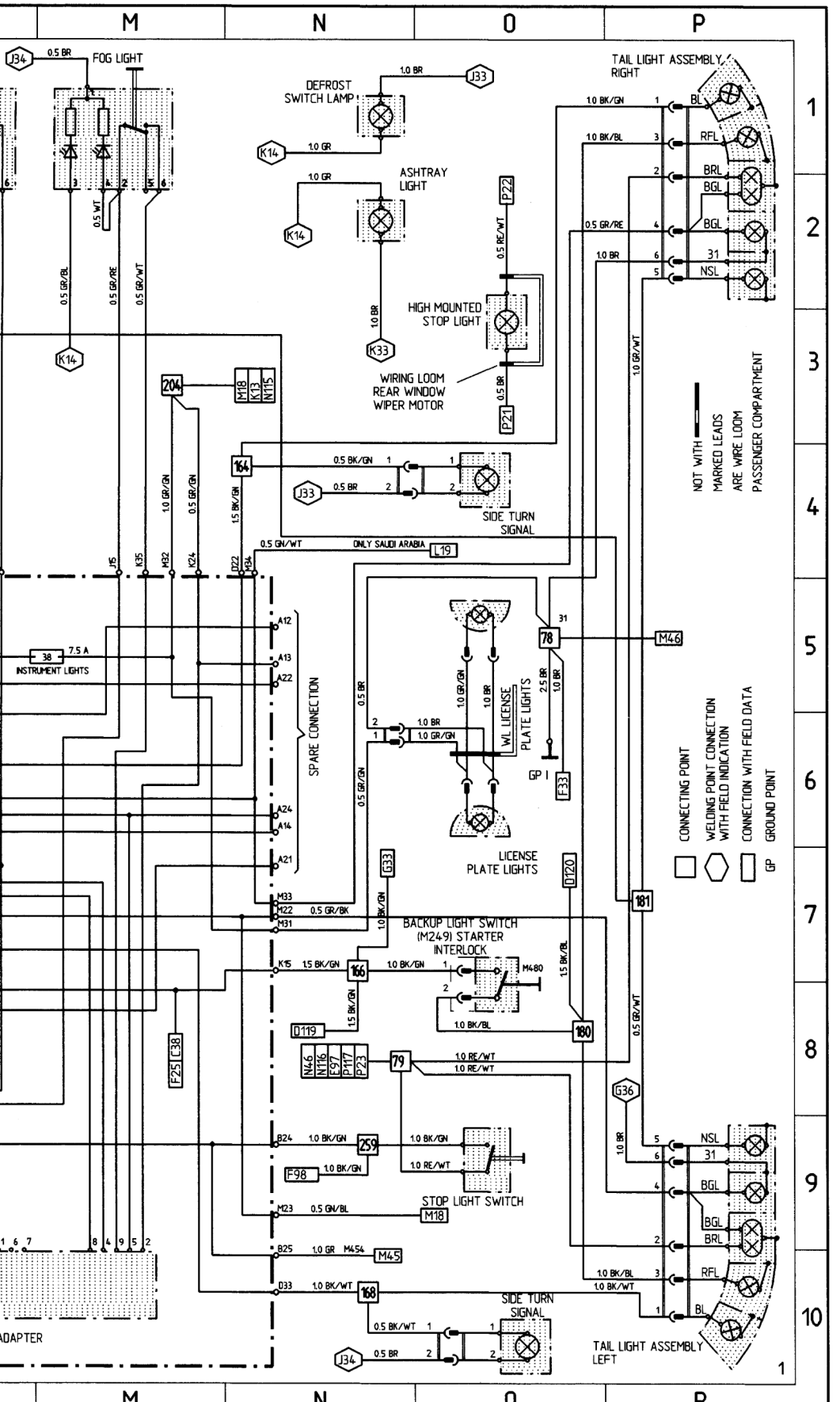
M
N
O
P
1
2
3
4
5
6
7
8
9
10
FOG LIGHT
DEFROST SWITCH LAMP
ASHTRAY LIGHT
HIGH MOUNTED STOP LIGHT
WIRING LOOM REAR WINDOW WIPER MOTOR
TAIL LIGHT ASSEMBLY RIGHT
TAIL LIGHT ASSEMBLY LEFT
SIDE TURN SIGNAL
SIDE TURN SIGNAL
ONLY SAUDI ARABIA
INSTRUMENT LIGHTS
SPARE CONNECTION
LICENSE PLATE LIGHTS
WL LICENSE PLATE LIGHTS
BACKUP LIGHT SWITCH (M249) STARTER INTERLOCK
STOP LIGHT SWITCH
NOT WITH MARKED LEADS ARE WIRE LOOM PASSENGER COMPARTMENT
CONNECTING POINT
WELDING POINT CONNECTION WITH FIELD INDICATION
CONNECTION WITH FIELD DATA
GROUND POINT
GP
ADAPTER

968 MODEL 92 SHEET 2

INSTRUMENT CLUSTER AND SENDERS

INDICATOR LIGHTS	
1	SIDE MARKER LIGHT
2	PARKING BRAKE
3	SEAT BELT
4	TEMP. INDICATOR
5	BRAKE PAD
6	TRAILER TURN SIGNAL
7	EX
8	FUEL LEVEL INDICATOR
9	INSTRUMENT LIGHTS
10	TURN SIGNALS
11	HIGH BEAM
12	TIPTRONIC
13	BRAKE FLUID
14	ABS CONTROL
15	OIL PRESSURE INDICATOR
16	AIRBAG
17	CHECK ENGINE
18	CHARGE INDICATOR
19	CENTRAL WARN. LIGHT
20	OIL LEVEL INDICATOR
21	WASHING FLUID

ADDITIONAL ELECTRIC IN INSTRUMENT CLUSTER	
1	BRAKE PAD WEAR K1
2	BRAKE PAD WEAR K2
3	TERM.15
4	OIL LEVEL WARNING - INPUT
5	NOT USED
6	OIL LEVEL WARNING - OUTPUT
7	TERM 31
8	BRAKE PAD WEAR OUTPUT
9	NOT USED
10	BRAKE FLUID - INPUT
11	OIL PRESSURE INDICATOR
12	BRAKE FLUID - OUTPUT

CONNECTING POINT

WELDING POINT CONNECTION WITH FIELD INDICATION

CONNECTION WITH FIELD DATA

GP GROUND POINT

NOT WITH MARKED LEADS ARE WIRE LOOM PASSENGER COMPARTMENT

INSTRUMENT CLUSTER

DISCONNECTING POINT ELECTRONIC

WATER TEMP.

TANK

PLUG A

BRAKE PAD WEAR LEAD FR

GROUND WHEEL CARRIER

COMBINATION LEAD

GROUND SIDE MEMBER

SEAT BELT CONTACT

PARKING BRAKE

SPEEDOMETER RESET

FUEL LEVEL SENDER

BRAKE FLUID RESERVOIR

ONLY JAPAN

TEMP. SENSOR CAT. CONV. ONLY JAPAN

WIRE HARNESS FRONT END

G24 ADDITIONAL CENTRAL ELECTRICS

CATALYTIC CONVERTER MONITOR ONLY JAPAN

CENTRAL ELECTRICS

TERM.31

BUZZ

BRAKE PAD WEAR LEAD FL

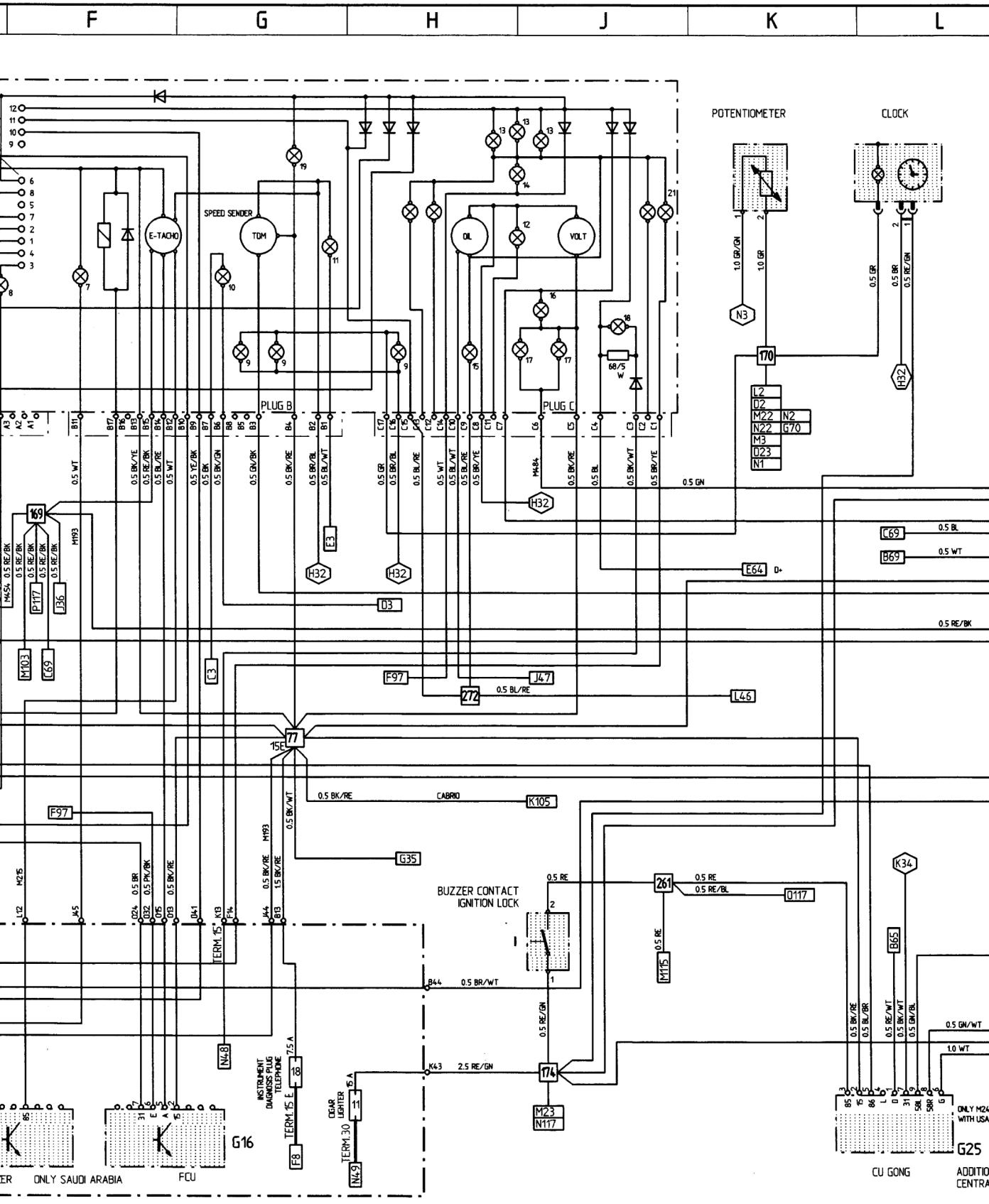
F
G
H
J
K
L
POTENTIOMETER
CLOCK
SPEED SENDER
E-TACHO
TDM
OIL
VOLT
PLUG B
PLUG C
BUZZER CONTACT
IGNITION LOCK
CABRIO
INSTRUMENT DIAGNOSIS PLUG TELEPHONE
CIGAR LIGHTER
TERM.15
TERM.15 E
TERM.30
ONLY SAUDI ARABIA
FCU
G16
CU GONG
G25
ADDITIO
CENTRA
ONLY M24
WITH USA
WT = WHITE
YE = YELLOW
RE = RED
VI = VIOLET
BL = BLUE
GN = GREEN
GR = GREY
BR = BROWN
BK = BLACK

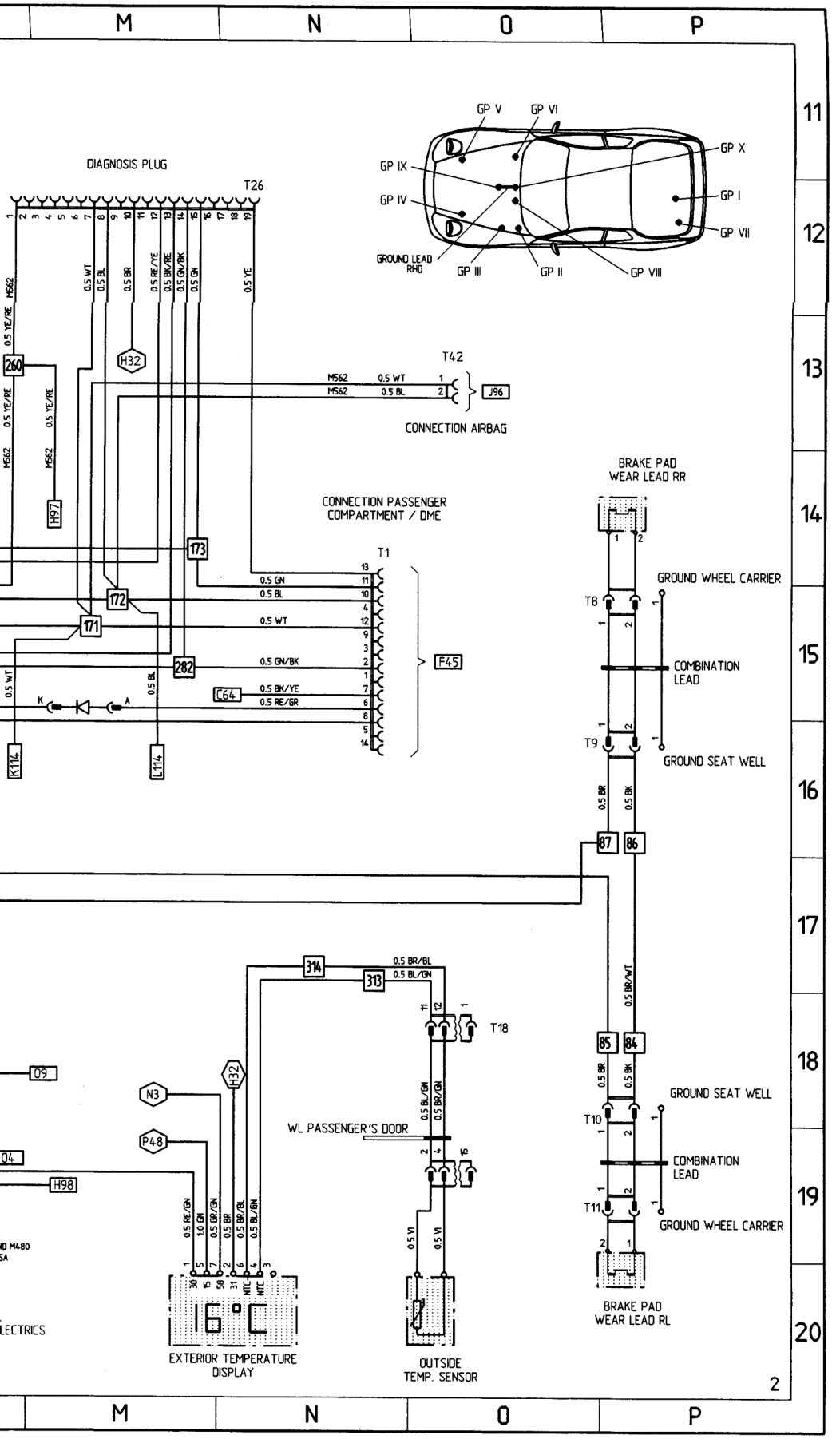
M
N
O
P
11
12
13
14
15
16
17
18
19
20
DIAGNOSIS PLUG
T26
GP V
GP VI
GP X
GP IX
GP I
GP IV
GP VII
GROUND LEAD RHD
GP III
GP II
GP VIII
H32
260
T42
M562 0.5 WT 1
M562 0.5 BL 2
J96
CONNECTION AIRBAG
CONNECTION PASSENGER COMPARTMENT / DME
T1
BRAKE PAD WEAR LEAD RR
GROUND WHEEL CARRIER
T8
COMBINATION LEAD
T9
GROUND SEAT WELL
H97
173
172
171
282
0.5 GN
0.5 BL
0.5 WT
0.5 GN/BK
F45
C64
0.5 BK/YE
0.5 RE/GR
K114
L114
87
86
314
313
0.5 BR/BL
0.5 BL/GN
T18
0.5 BR/WT
85
84
09
N3
P48
H32
WL PASSENGER'S DOOR
GROUND SEAT WELL
T10
COMBINATION LEAD
T11
GROUND WHEEL CARRIER
H98
EXTERIOR TEMPERATURE DISPLAY
OUTSIDE TEMP. SENSOR
BRAKE PAD WEAR LEAD RL
2

968 MODEL 92 SHEET 3

HEATING, AIR CONDITIONING, VENTILATING, POWER SEATS, WIPE- AND WASH CLEANERS

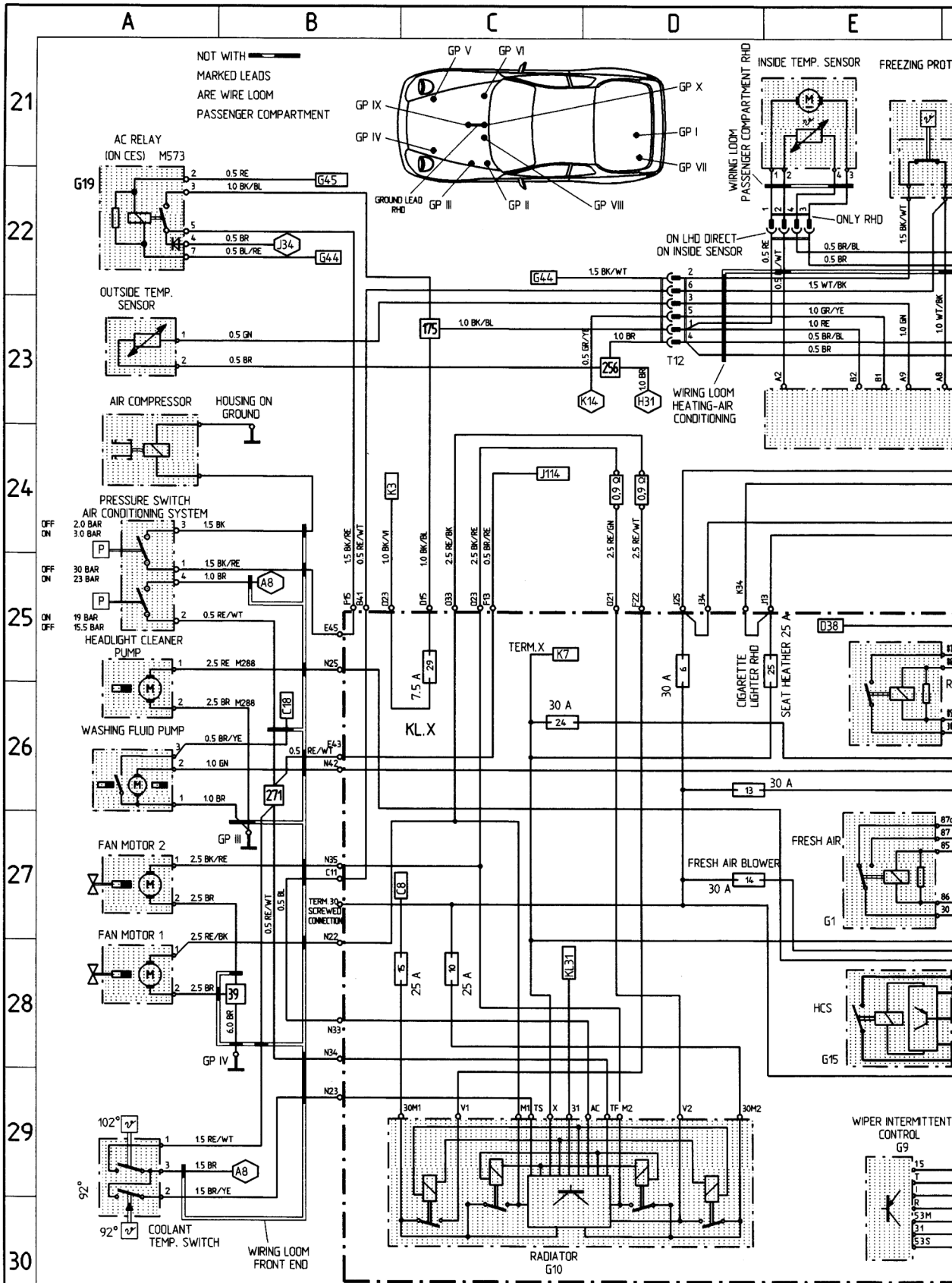

Printed in Germany - I , 1991

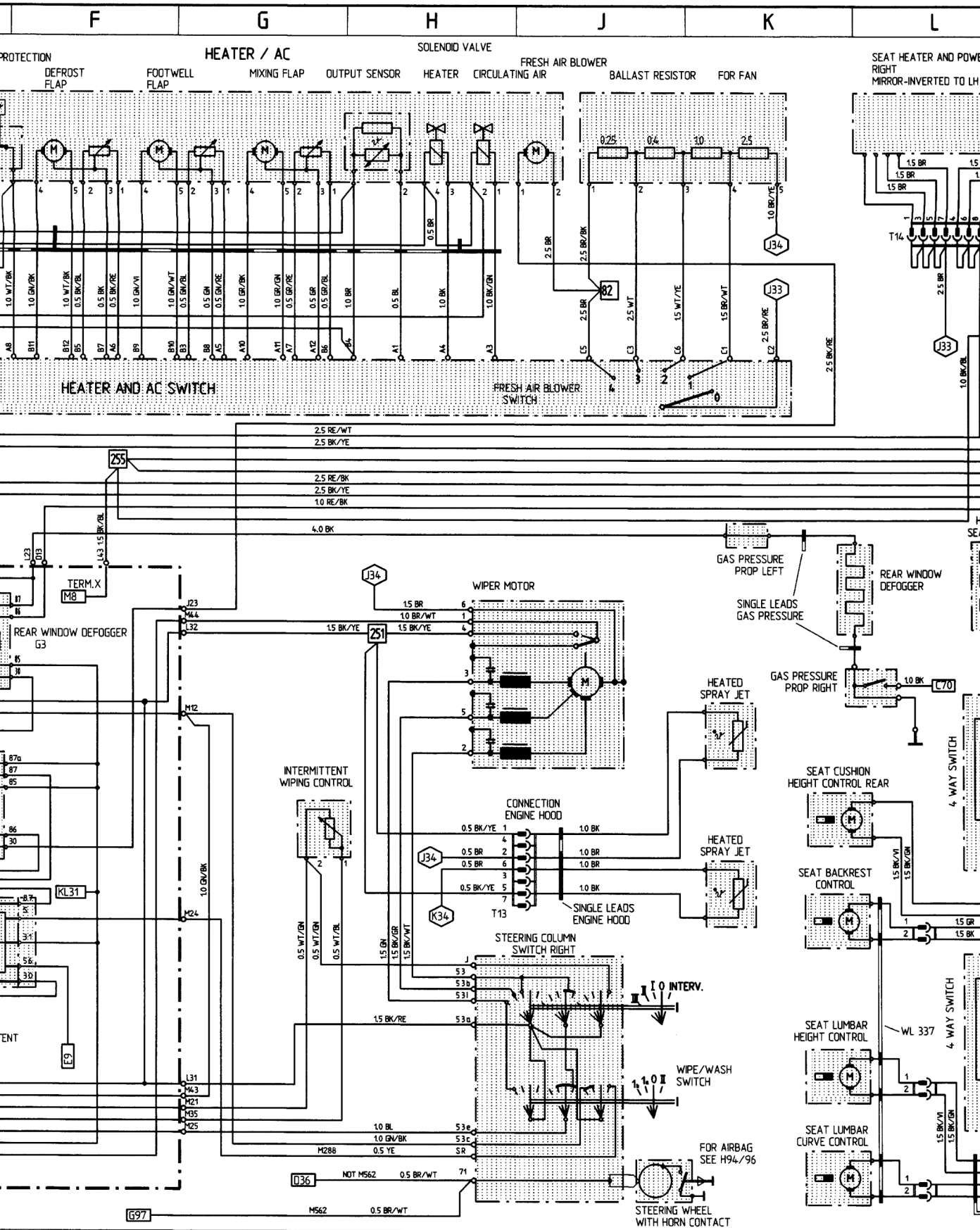
F
G
H
J
K
L
HEATER / AC
SOLENOID VALVE
PROTECTION
DEFROST FLAP
FOOTWELL FLAP
MIXING FLAP
OUTPUT SENSOR
HEATER
FRESH AIR BLOWER CIRCULATING AIR
BALLAST RESISTOR
FOR FAN
SEAT HEATER AND POWE
RIGHT
MIRROR-INVERTED TO LH
HEATER AND AC SWITCH
FRESH AIR BLOWER SWITCH
T14
J33
J34
82
255
251
2.5 RE/WT
2.5 BK/YE
2.5 RE/BK
1.0 RE/BK
4.0 BK
TERM.X
M8
REAR WINDOW DEFOGGER
G3
WIPER MOTOR
GAS PRESSURE PROP LEFT
SINGLE LEADS GAS PRESSURE
REAR WINDOW DEFOGGER
GAS PRESSURE PROP RIGHT
C70
HEATED SPRAY JET
HEATED SPRAY JET
INTERMITTENT WIPING CONTROL
CONNECTION ENGINE HOOD
T13
SINGLE LEADS ENGINE HOOD
K34
SEAT CUSHION HEIGHT CONTROL REAR
4 WAY SWITCH
SEAT BACKREST CONTROL
STEERING COLUMN SWITCH RIGHT
I 0 INTERV.
WIPE/WASH SWITCH
SEAT LUMBAR HEIGHT CONTROL
WL 337
4 WAY SWITCH
SEAT LUMBAR CURVE CONTROL
KL31
E9
M24
M12
L31
M43
M21
M35
M25
M288
036
NOT M562
M562
G97
FOR AIRBAG SEE H94/96
STEERING WHEEL WITH HORN CONTACT
WT = WHITE
YE = YELLOW
RE = RED
VI = VIOLET
BL = BLUE
GN = GREEN
GR = GREY
BR = BROWN
BK = BLACK

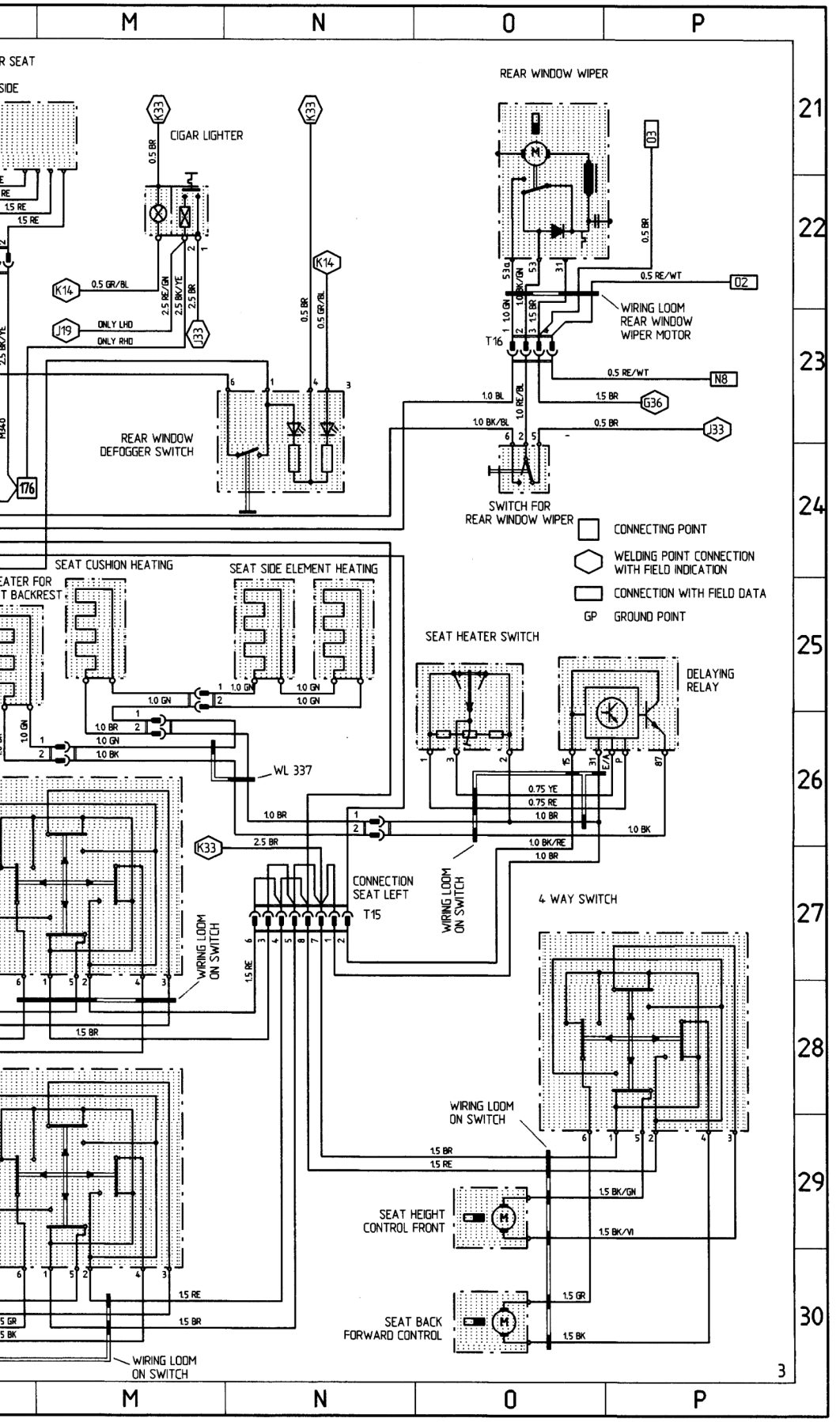
M
N
O
P
21
22
23
24
25
26
27
28
29
30
REAR WINDOW WIPER
CIGAR LIGHTER
REAR WINDOW DEFOGGER SWITCH
WIRING LOOM REAR WINDOW WIPER MOTOR
SWITCH FOR REAR WINDOW WIPER
CONNECTING POINT
WELDING POINT CONNECTION WITH FIELD INDICATION
CONNECTION WITH FIELD DATA
GP GROUND POINT
SEAT CUSHION HEATING
SEAT SIDE ELEMENT HEATING
SEAT HEATER SWITCH
DELAYING RELAY
WL 337
CONNECTION SEAT LEFT
T15
WIRING LOOM ON SWITCH
4 WAY SWITCH
SEAT HEIGHT CONTROL FRONT
SEAT BACK FORWARD CONTROL
ONLY LHD
ONLY RHD
3

968 MODEL 92 SHEET 4

TWO-TONE HORNS, MIRRORS, LIFTING ROOF, POWER WINDOW REGULATOR, TAILGATE UNLOCKING

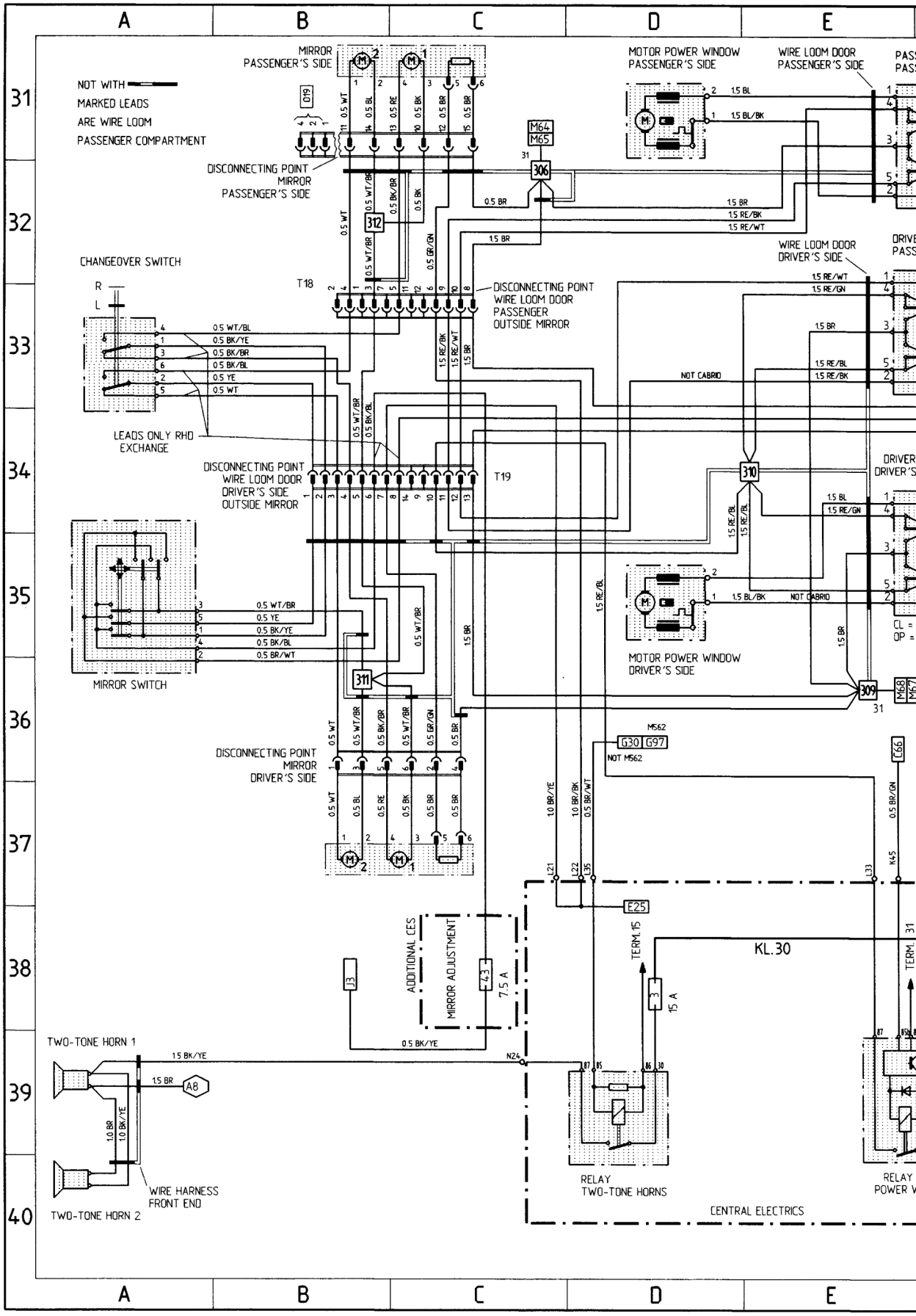

Printed in Germany - I, 1991

UNLOCKING

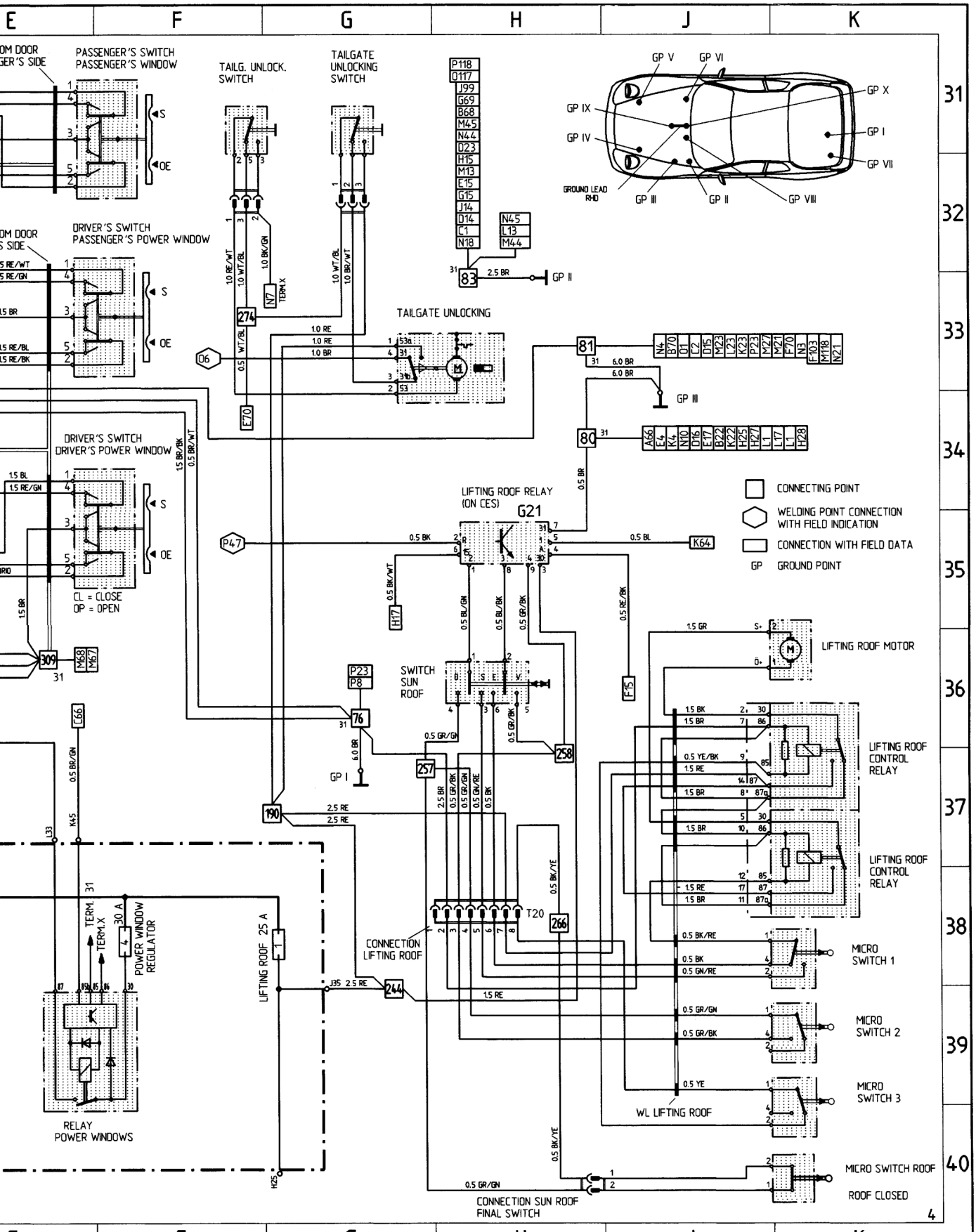

WT = WHITE YE = YELLOW RE = RED VI = VIOLET BL = BLUE
GN = GREEN GR = GREY BR = BROWN BK = BLACK

TWO-TONE HORNS, MIRRORS, LIFTING ROOF, POWER WINDOW REGULATOR, TAILGATE UNLOCKIN

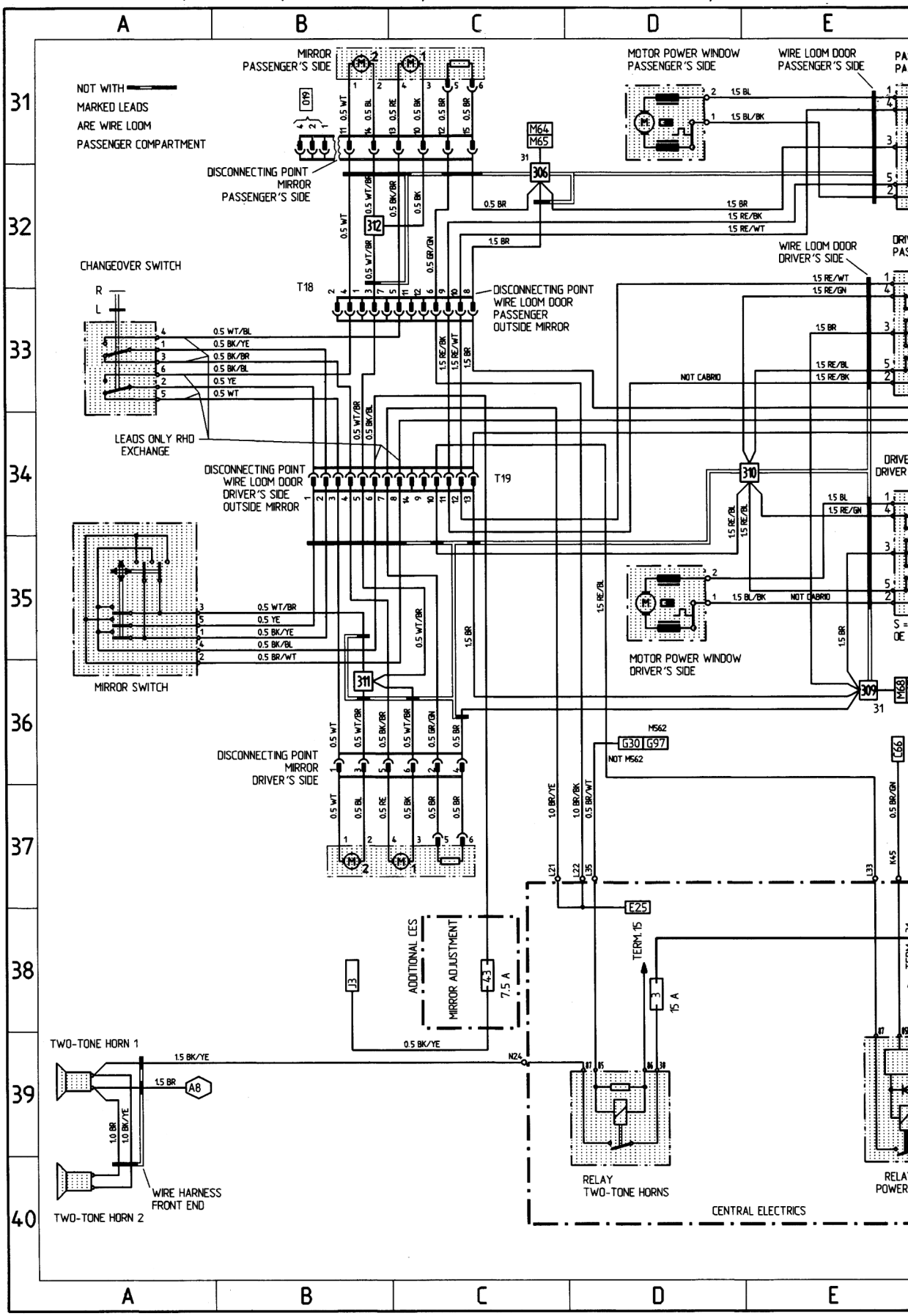

97-9a

Printed in Germany -III. 1991

UNLOCKING as of VIN 96 NS 80 0102 RoW and 96 NS 82 0067 USA

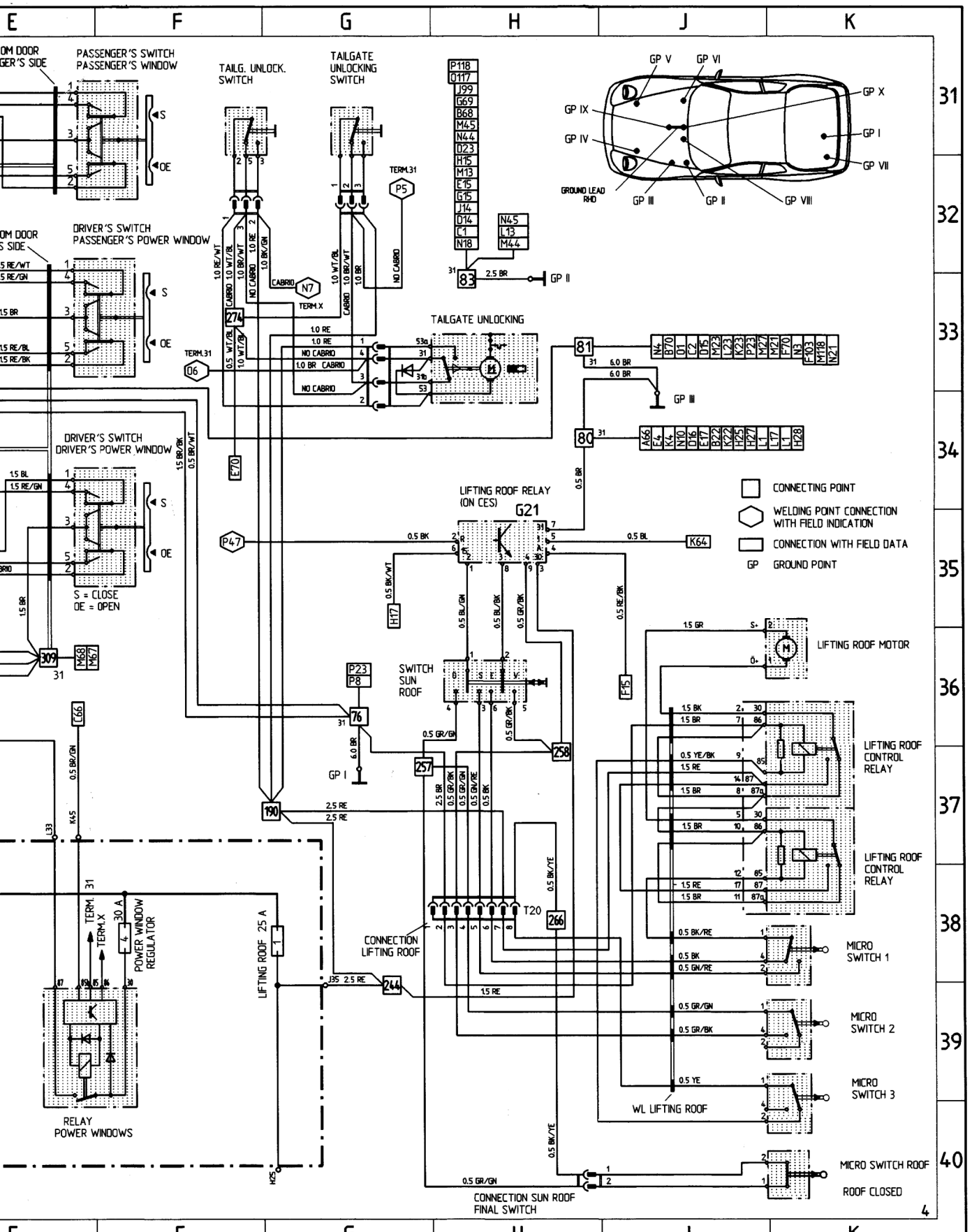

WT = WHITE YE = YELLOW RE = RED VI = VIOLET BL = BLUE
GN = GREEN GR = GREY BR = BROWN BK = BLACK

968 MODEL 92 SHEET 5

ENGINE COMPARTMENT, CRUISE CONTROL

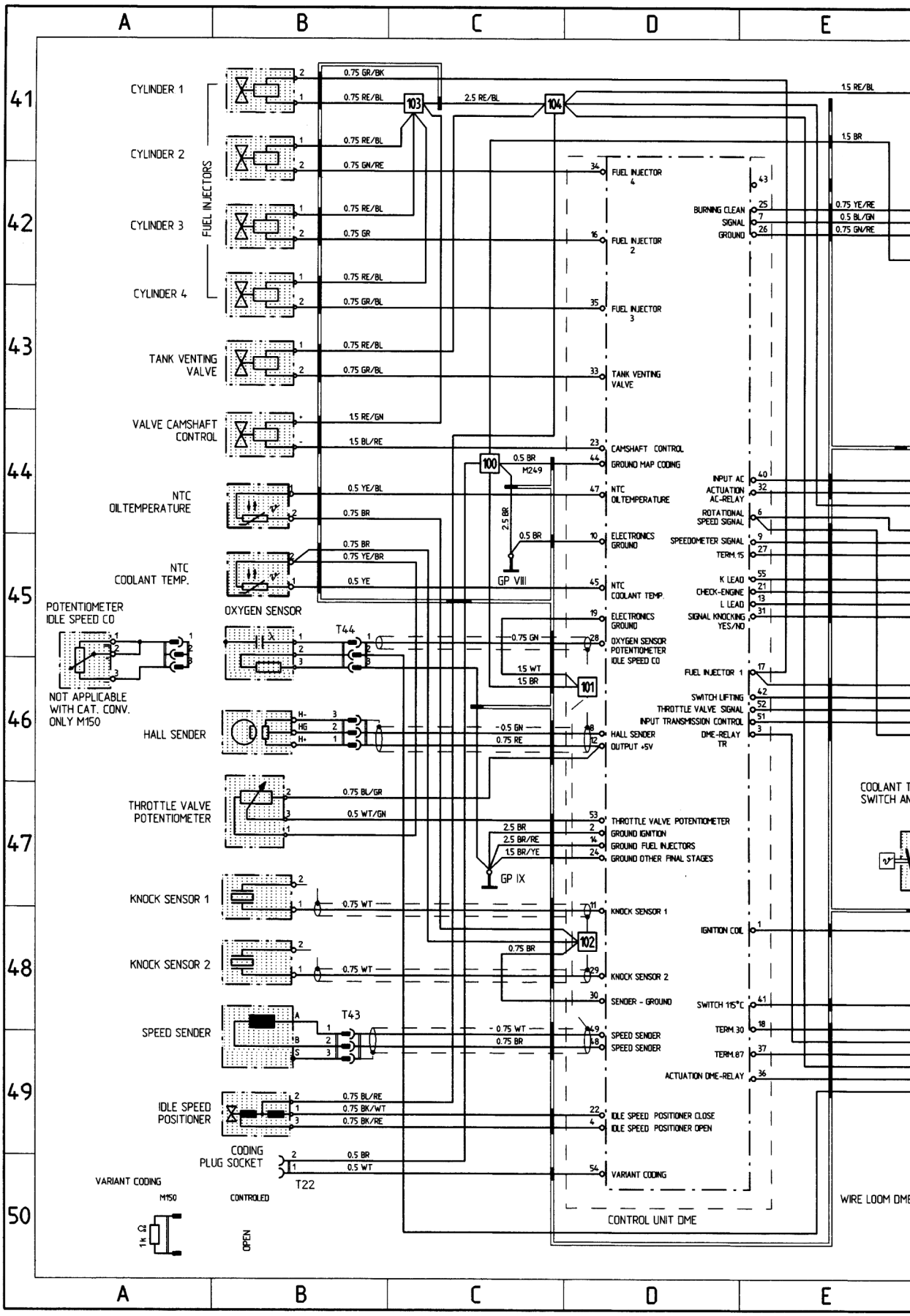

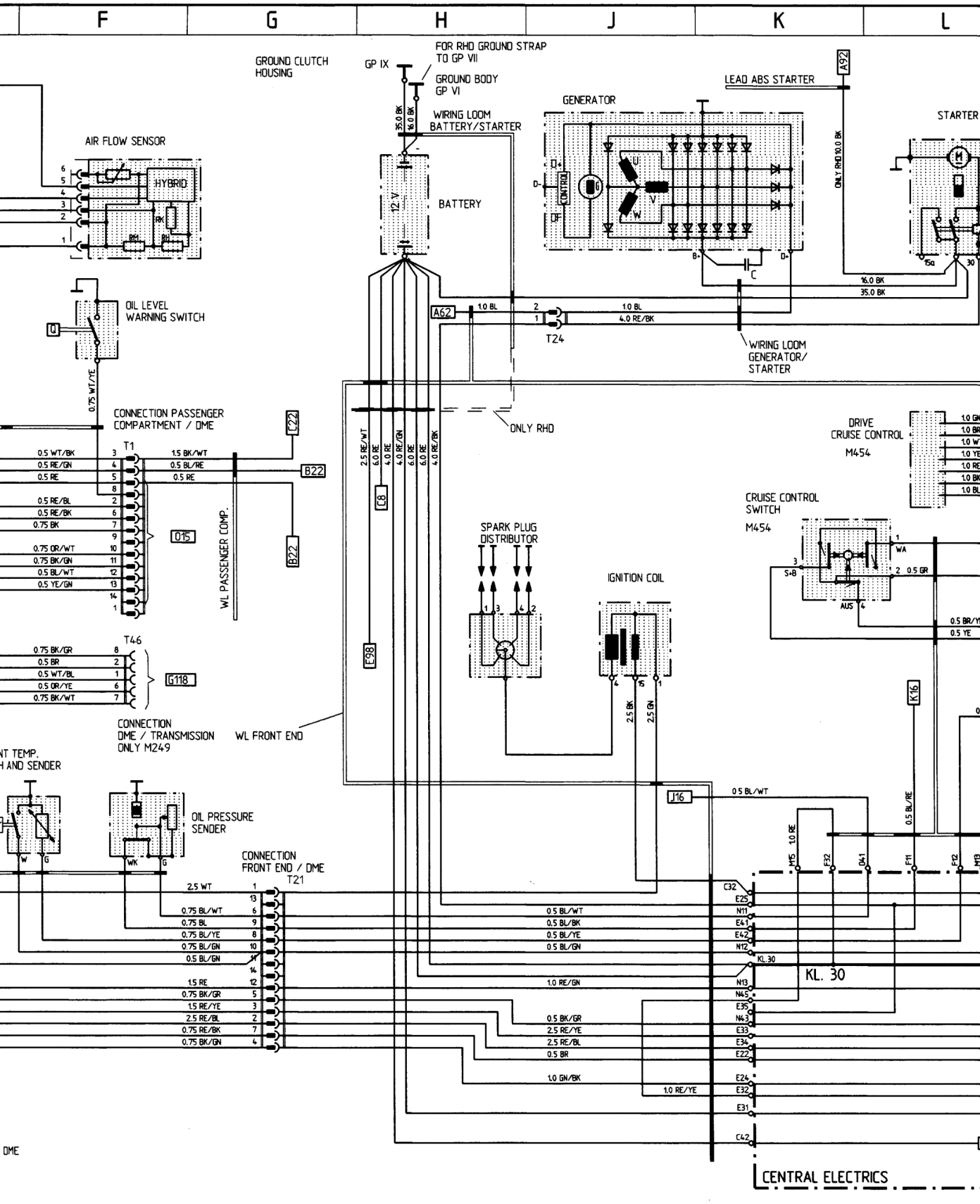
F
G
H
J
K
L
GROUND CLUTCH HOUSING
GP IX
FOR RHD GROUND STRAP TO GP VII
GROUND BODY GP VI
WIRING LOOM BATTERY/STARTER
35.0 BK
16.0 BK
BATTERY
12 V
GENERATOR
LEAD ABS STARTER
A92
STARTER
ONLY RHD 10.0 BK
AIR FLOW SENSOR
HYBRID
OIL LEVEL WARNING SWITCH
Q
0.75 WT/YE
A62
1.0 BL
4.0 RE/BK
T24
WIRING LOOM GENERATOR/ STARTER
16.0 BK
35.0 BK
ONLY RHD
CONNECTION PASSENGER COMPARTMENT / DME
T1
B22
WL PASSENGER COMP.
015
0.5 WT/BK
0.5 RE/GN
0.5 RE
0.5 RE/BL
0.5 RE/BK
0.75 BK
0.75 OR/WT
0.75 BK/GN
0.5 BL/WT
0.5 YE/GN
1.5 BK/WT
0.5 BL/RE
T46
G118
0.75 BK/GR
0.5 BR
0.5 WT/BL
0.5 OR/YE
0.75 BK/WT
CONNECTION DME / TRANSMISSION ONLY M249
WL FRONT END
E98
C8
2.5 RE/WT
6.0 RE
4.0 RE/GN
6.0 OE
6.0 BE
4.0 RE/BK
SPARK PLUG DISTRIBUTOR
IGNITION COIL
2.5 BK
2.5 GN
DRIVE CRUISE CONTROL
M454
CRUISE CONTROL SWITCH
M454
WA
S+B
AUS
0.5 GR
0.5 BR/YE
0.5 YE
K16
J16
0.5 BL/WT
0.5 BL/RE
1.0 RE
M5
F32
041
F11
F12
M13
OIL PRESSURE SENDER
W
G
WK
G
CONNECTION FRONT END / DME
T21
2.5 WT
0.75 BL/WT
0.75 BL
0.75 BL/YE
0.75 BL/GN
0.5 BL/GN
1.5 RE
0.75 BK/GR
1.5 RE/YE
2.5 RE/BL
0.75 RE/BK
0.75 BK/GN
C32
E25
N11
E41
E42
N12
KL.30
KL. 30
N13
N45
E35
N43
E33
E34
E22
E24
E32
E31
C42
0.5 BL/WT
0.5 BL/BK
0.5 BL/YE
0.5 BL/GN
1.0 RE/GN
0.5 BK/GR
2.5 RE/YE
2.5 RE/BL
0.5 BR
1.0 GN/BK
1.0 RE/YE
CENTRAL ELECTRICS
DME
WT = WHITE
YE = YELLOW
RE = RED
VI = VIOLET
BL = BLUE
GN = GREEN
GR = GREY
BR = BROWN
BK = BLACK

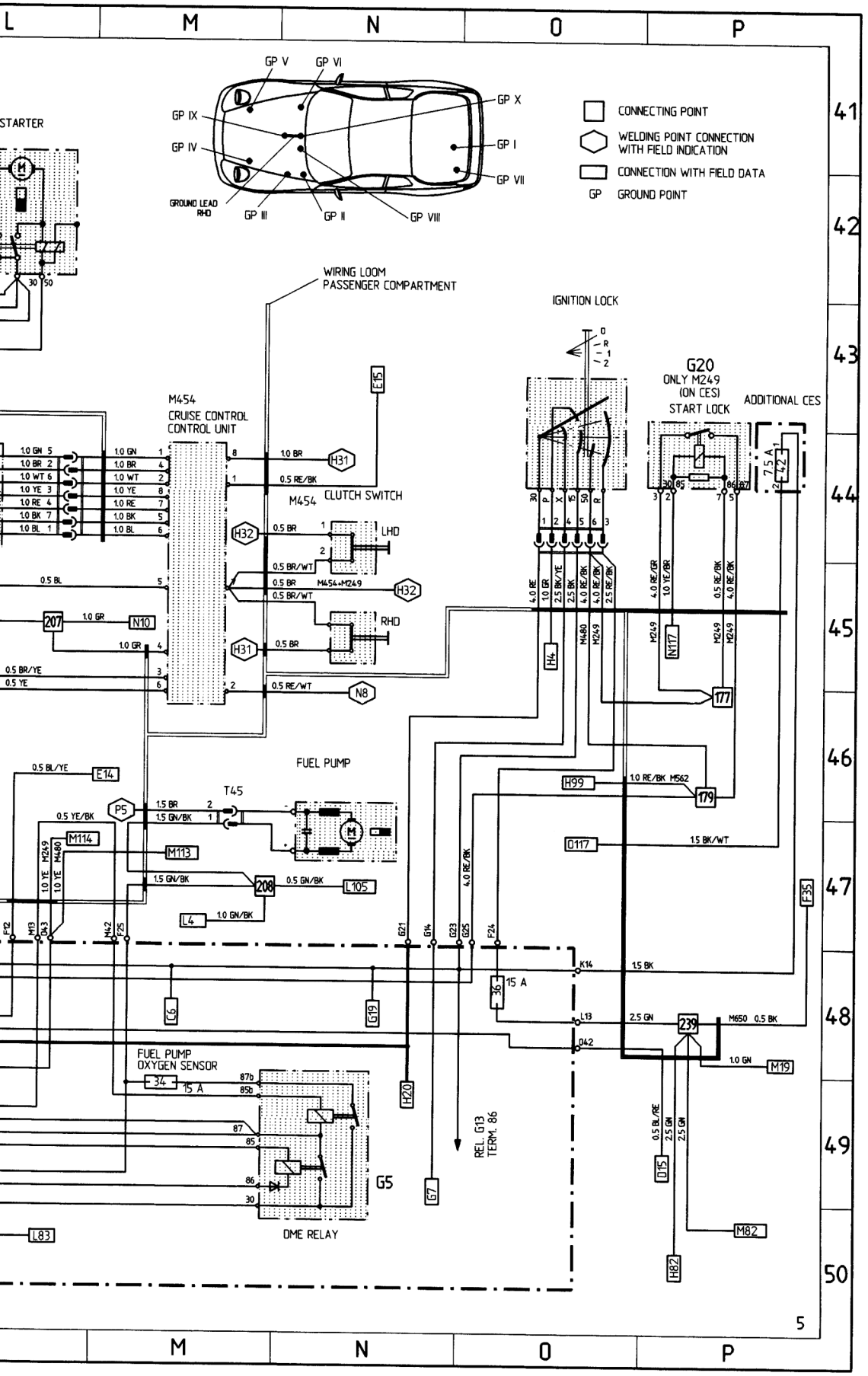
L
M
N
O
P
41
42
43
44
45
46
47
48
49
50
GP V
GP VI
GP IX
GP X
GP IV
GP I
GP VII
GROUND LEAD RHD
GP III
GP II
GP VIII
CONNECTING POINT
WELDING POINT CONNECTION WITH FIELD INDICATION
CONNECTION WITH FIELD DATA
GP GROUND POINT
STARTER
WIRING LOOM PASSENGER COMPARTMENT
IGNITION LOCK
G20
ONLY M249 (ON CES)
START LOCK
ADDITIONAL CES
M454
CRUISE CONTROL CONTROL UNIT
CLUTCH SWITCH
LHD
RHD
FUEL PUMP
T45
FUEL PUMP OXYGEN SENSOR
DME RELAY
REL. G13 TERM. 86
15 A
7.5 A
5

CENTRAL ELECTRICS

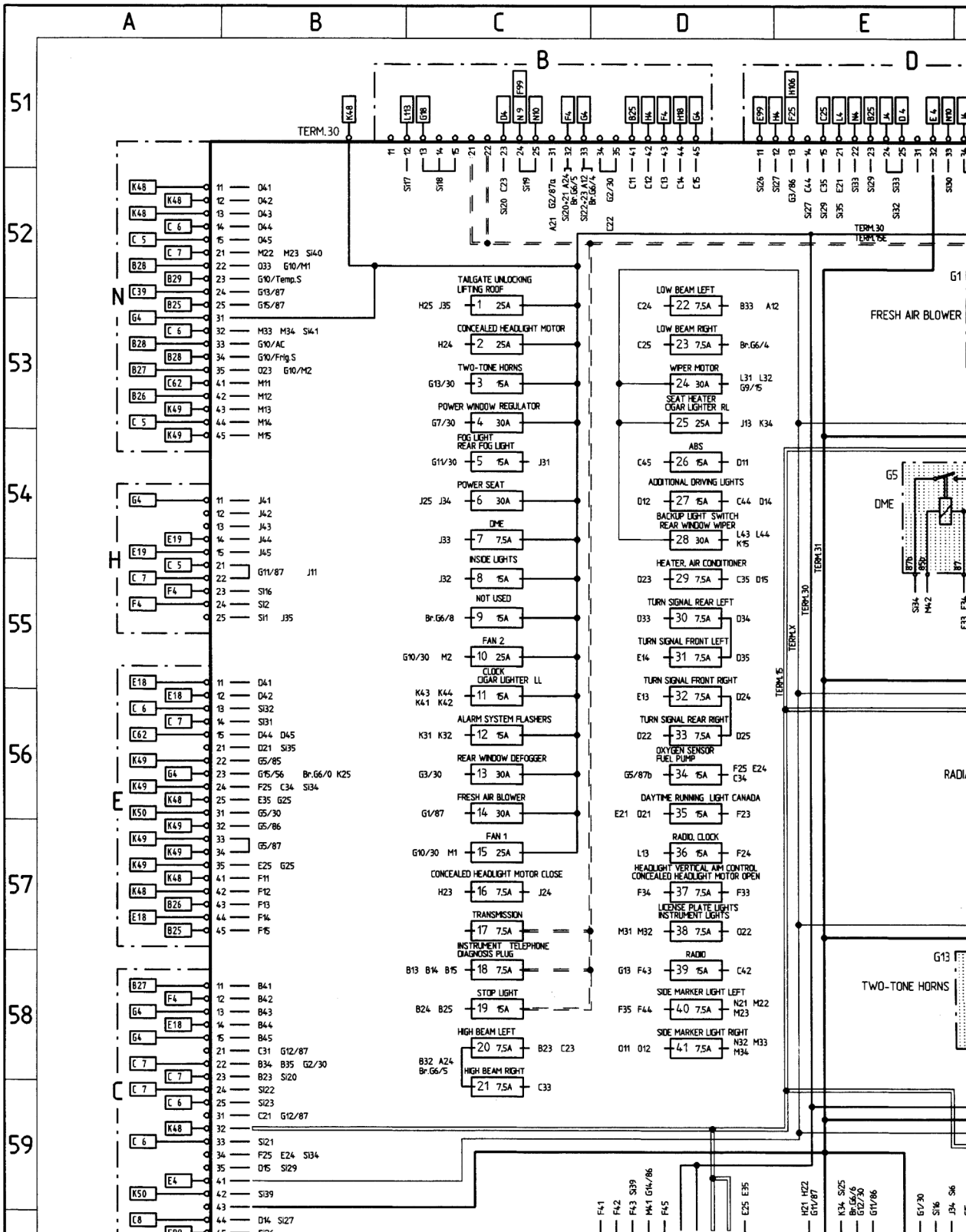

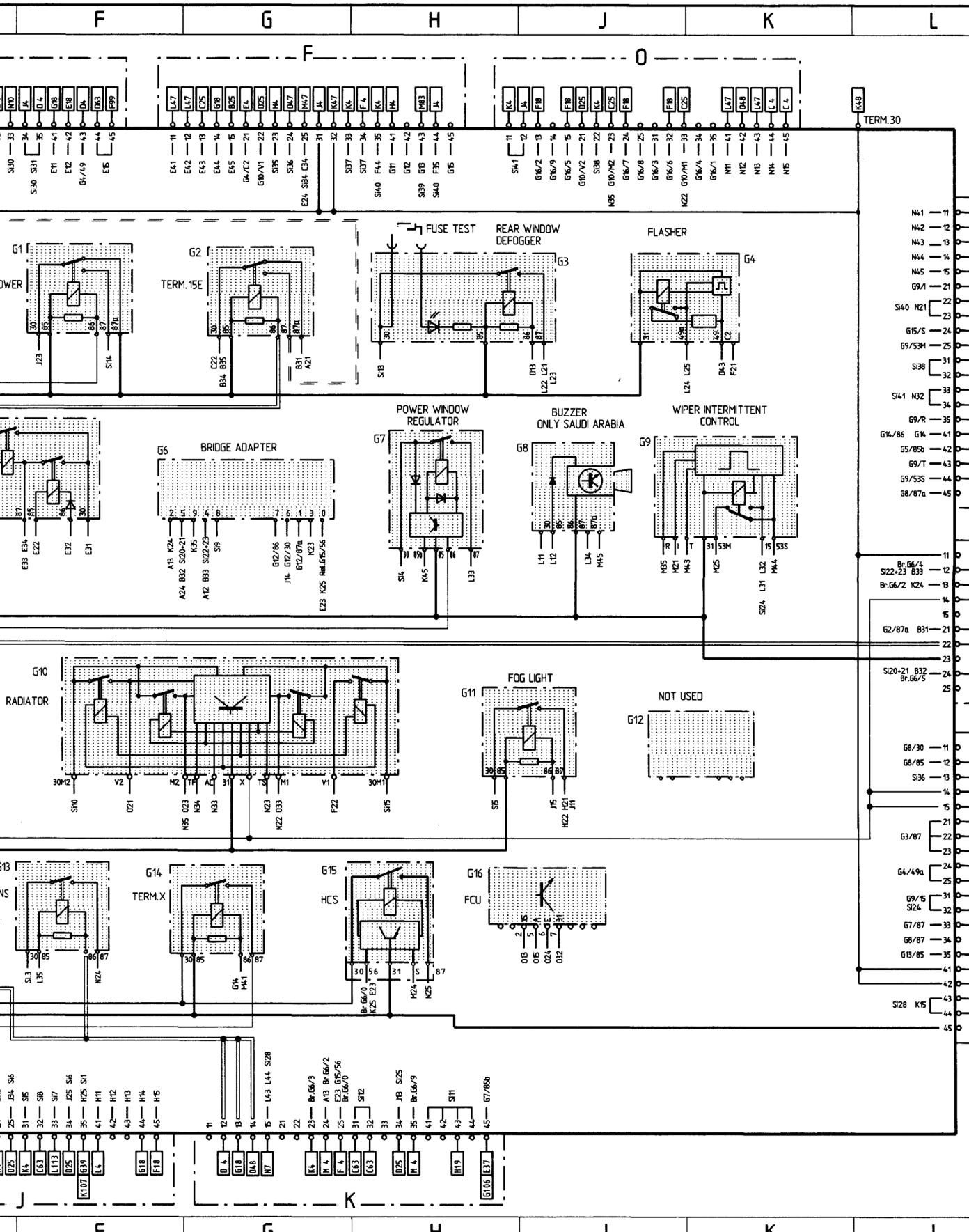
F
G
H
J
K
L
TERM.30
G1
G2
TERM.15E
FUSE TEST
REAR WINDOW DEFOGGER
G3
FLASHER
G4
G6
BRIDGE ADAPTER
POWER WINDOW REGULATOR
G7
BUZZER ONLY SAUDI ARABIA
G8
WIPER INTERMITTENT CONTROL
G9
G10
RADIATOR
FOG LIGHT
G11
NOT USED
G12
G13
G14
TERM.X
G15
HCS
G16
FCU

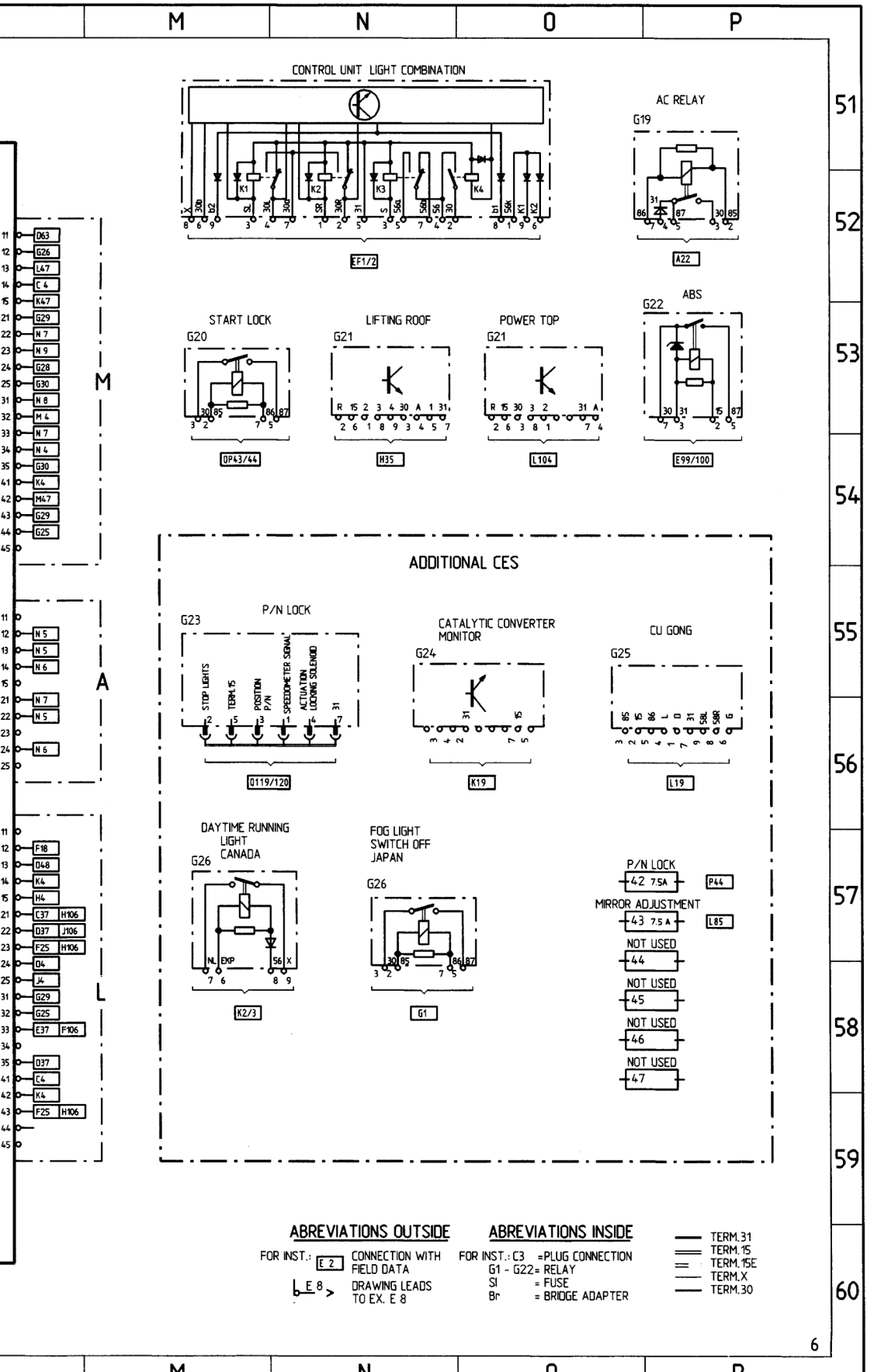

ABREVIATIONS OUTSIDE

FOR INST.: E 2 CONNECTION WITH FIELD DATA

E 8 DRAWING LEADS TO EX. E 8

ABREVIATIONS INSIDE

FOR INST.: C3 =PLUG CONNECTION
G1 - G22= RELAY
Sl = FUSE
Br = BRIDGE ADAPTER

TERM.31
TERM.15
TERM.15E
TERM.X
TERM.30

968 MODEL 92 SHEET 7

CENTRAL LOCKS, ALARM SYSTEM

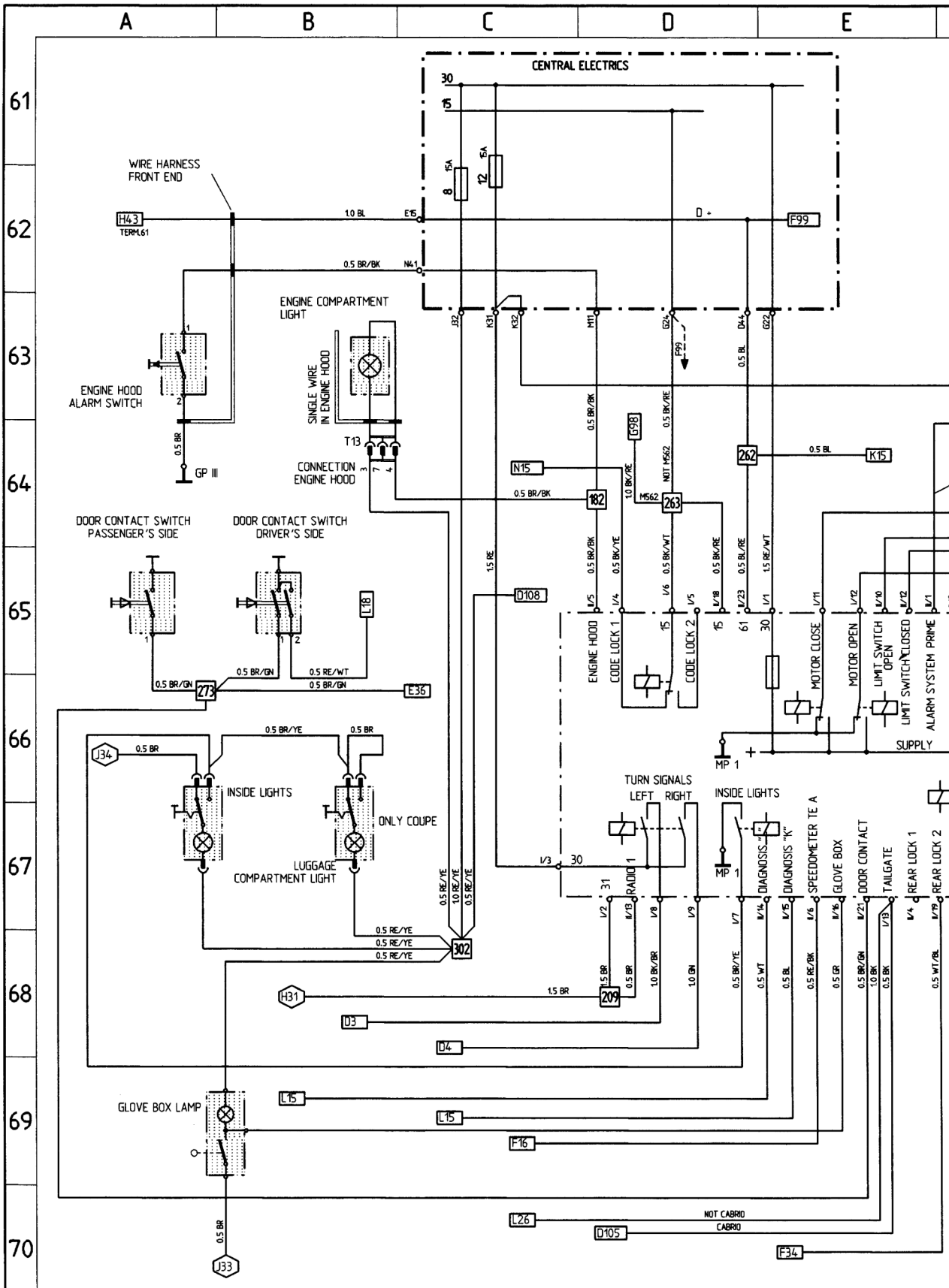

Printed in Germany - I, 1991

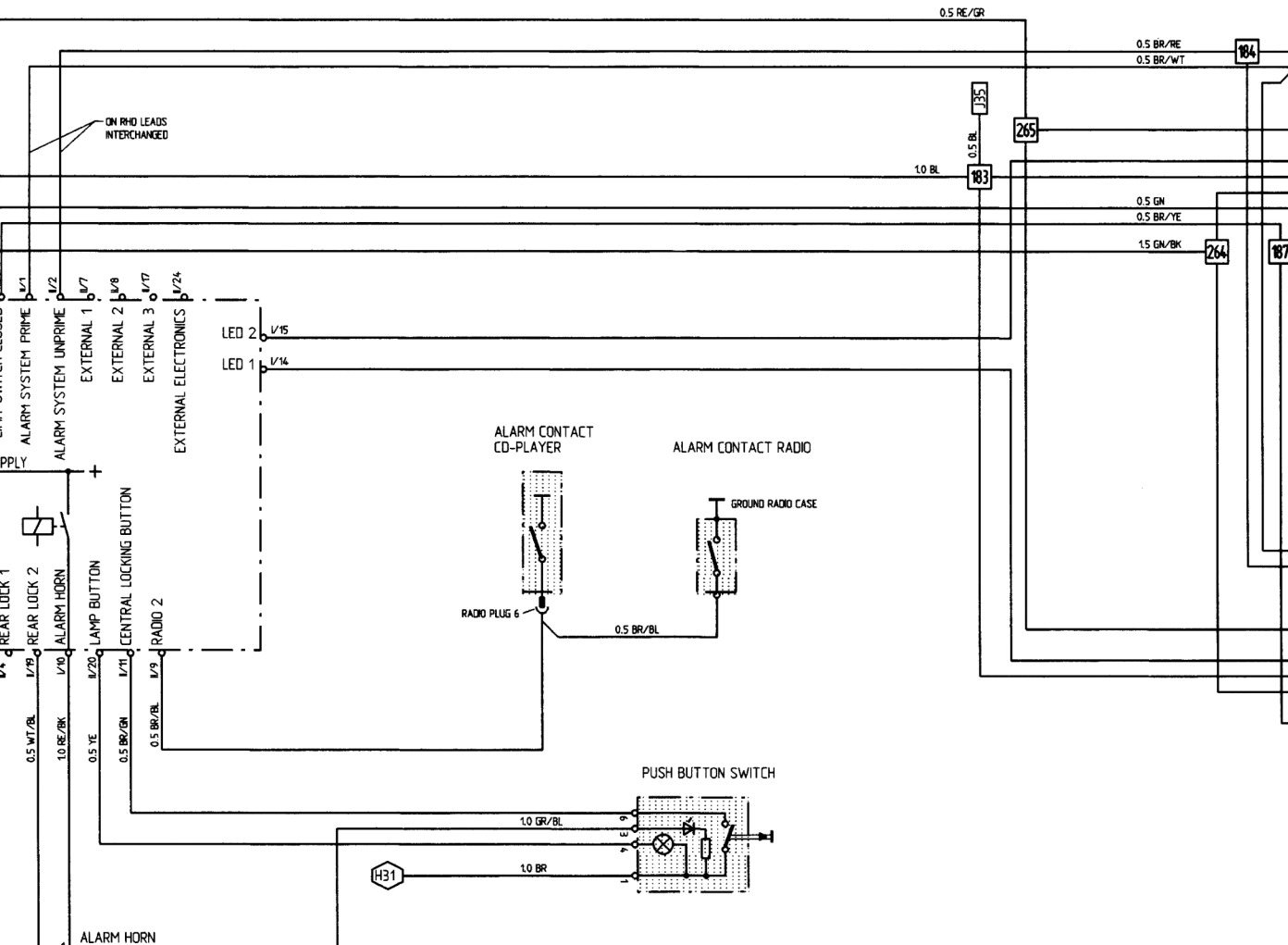
F
G
H
J
K
L
0.5 RE/GR
0.5 BR/RE
0.5 BR/WT
184
135
265
0.5 BL
1.0 BL
183
0.5 GN
0.5 BR/YE
1.5 GN/BK
264
187
ON RHD LEADS INTERCHANGED
ALARM SYSTEM PRIME
ALARM SYSTEM UNPRIME
EXTERNAL 1
EXTERNAL 2
EXTERNAL 3
EXTERNAL ELECTRONICS
LED 2
LED 1
ALARM CONTACT CD-PLAYER
ALARM CONTACT RADIO
GROUND RADIO CASE
RADIO PLUG 6
0.5 BR/BL
REAR LOCK 1
REAR LOCK 2
ALARM HORN
LAMP BUTTON
CENTRAL LOCKING BUTTON
RADIO 2
0.5 WT/BL
1.0 RE/BK
0.5 YE
0.5 BR/GN
0.5 BR/BL
PUSH BUTTON SWITCH
1.0 GR/BL
1.0 BR
H31
ALARM HORN
1.0 BR
K33
K14
NOT WITH
MARKED LEADS ARE WIRE LOOM
PASSENGER COMPARTMENT
F
G
H
J
K
L
WT = WHITE
YE = YELLOW
RE = RED
VI = VIOLET
BL = BLUE
GN = GREEN
GR = GREY
BR = BROWN
BK = BLACK

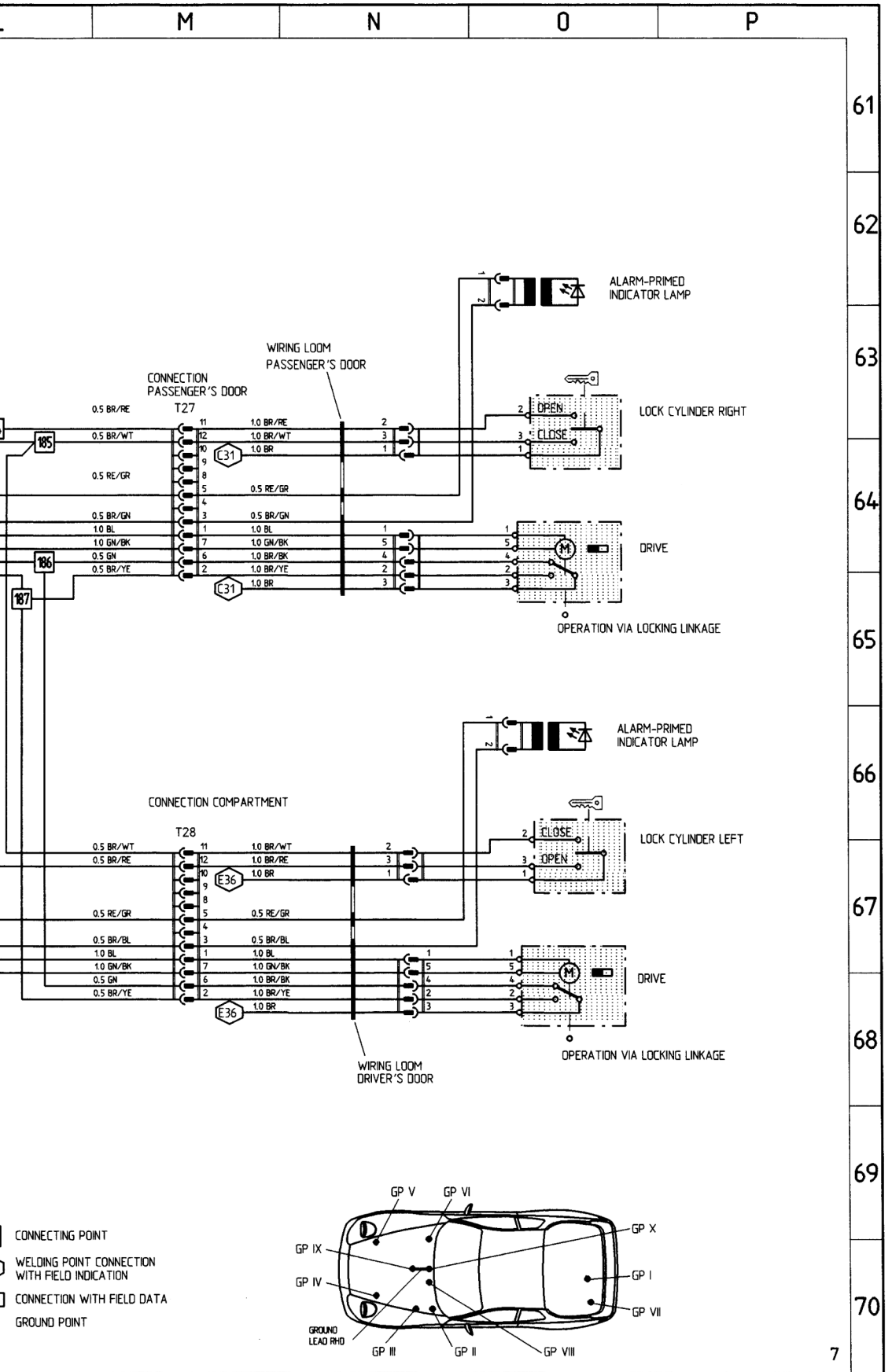
L
M
N
O
P
61
62
63
64
65
66
67
68
69
70
ALARM-PRIMED INDICATOR LAMP
WIRING LOOM PASSENGER'S DOOR
CONNECTION PASSENGER'S DOOR
T27
0.5 BR/RE
0.5 BR/WT
0.5 RE/GR
0.5 BR/GN
1.0 BL
1.0 GN/BK
0.5 GN
0.5 BR/YE
185
186
187
C31
1.0 BR/RE
1.0 BR/WT
1.0 BR
0.5 RE/GR
0.5 BR/GN
1.0 BL
1.0 GN/BK
1.0 BR/BK
1.0 BR/YE
OPEN
CLOSE
LOCK CYLINDER RIGHT
DRIVE
OPERATION VIA LOCKING LINKAGE
ALARM-PRIMED INDICATOR LAMP
CONNECTION COMPARTMENT
T28
0.5 BR/WT
0.5 BR/RE
0.5 RE/GR
0.5 BR/BL
1.0 BL
1.0 GN/BK
0.5 GN
0.5 BR/YE
E36
1.0 BR/WT
1.0 BR/RE
1.0 BR
0.5 RE/GR
0.5 BR/BL
1.0 BL
1.0 GN/BK
1.0 BR/BK
1.0 BR/YE
CLOSE
OPEN
LOCK CYLINDER LEFT
DRIVE
OPERATION VIA LOCKING LINKAGE
WIRING LOOM DRIVER'S DOOR
CONNECTING POINT
WELDING POINT CONNECTION WITH FIELD INDICATION
CONNECTION WITH FIELD DATA
GROUND POINT
GP V
GP VI
GP IX
GP X
GP IV
GP I
GP VII
GROUND LEAD RHD
GP III
GP II
GP VIII
7

FOG LIGHT, REAR FOG LIGHT

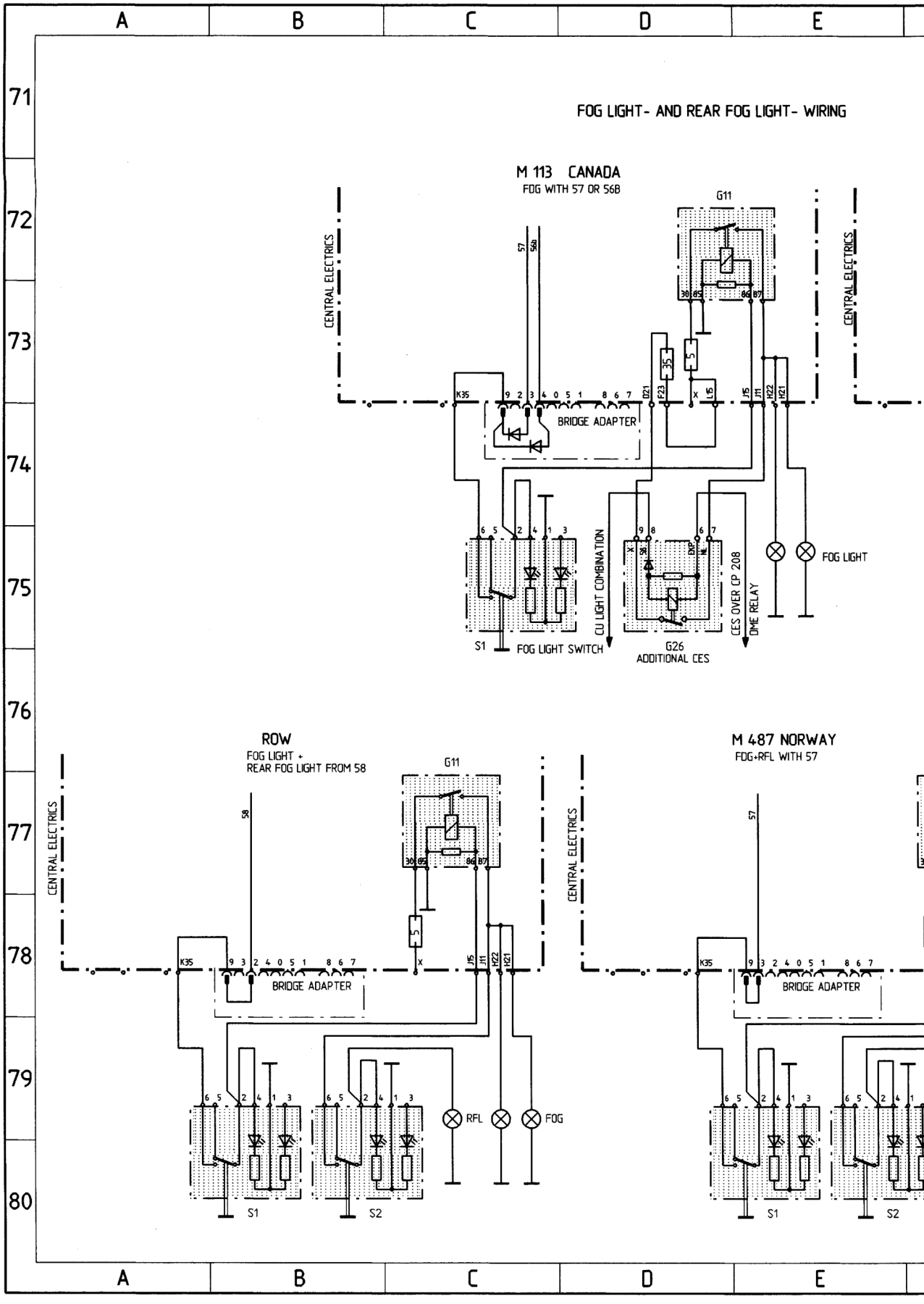

Printed in Germany - I, 1991

WIRING

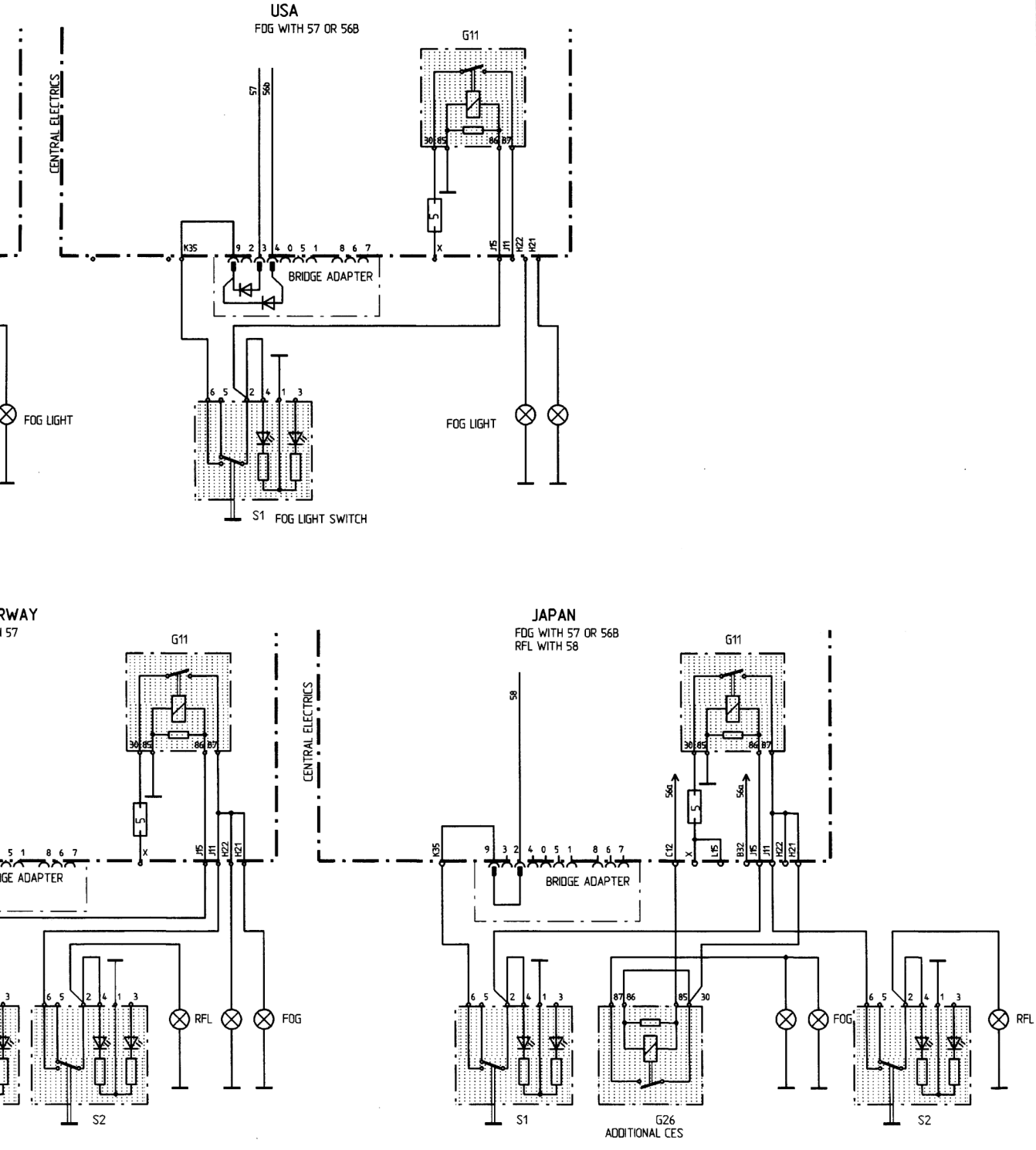
USA
FOG WITH 57 OR 56B
G11
CENTRAL ELECTRICS
57
56b
K35
BRIDGE ADAPTER
J15
J11
H22
H21
FOG LIGHT
FOG LIGHT
S1 FOG LIGHT SWITCH
JAPAN
FOG WITH 57 OR 56B
RFL WITH 58
58
56a
C12
L15
B32
RFL
FOG
FOG
RFL
S2
S1
G26
ADDITIONAL CES
S2

8

RADIO

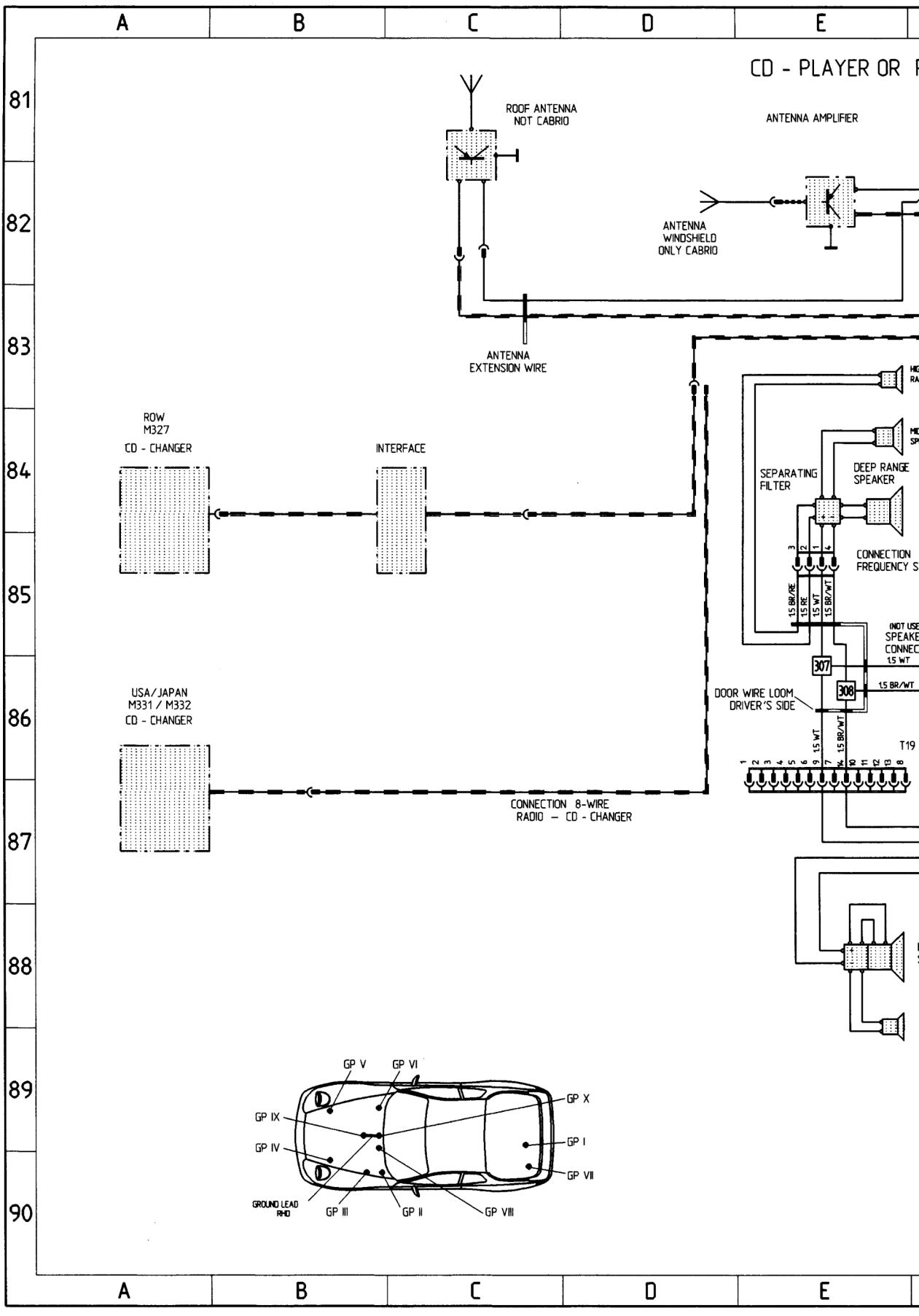

Printed in Germany - I, 1991

OR RADIO WITH 4 FINAL STAGES AND EQUALIZER

WITH HIFI SPEAKERS

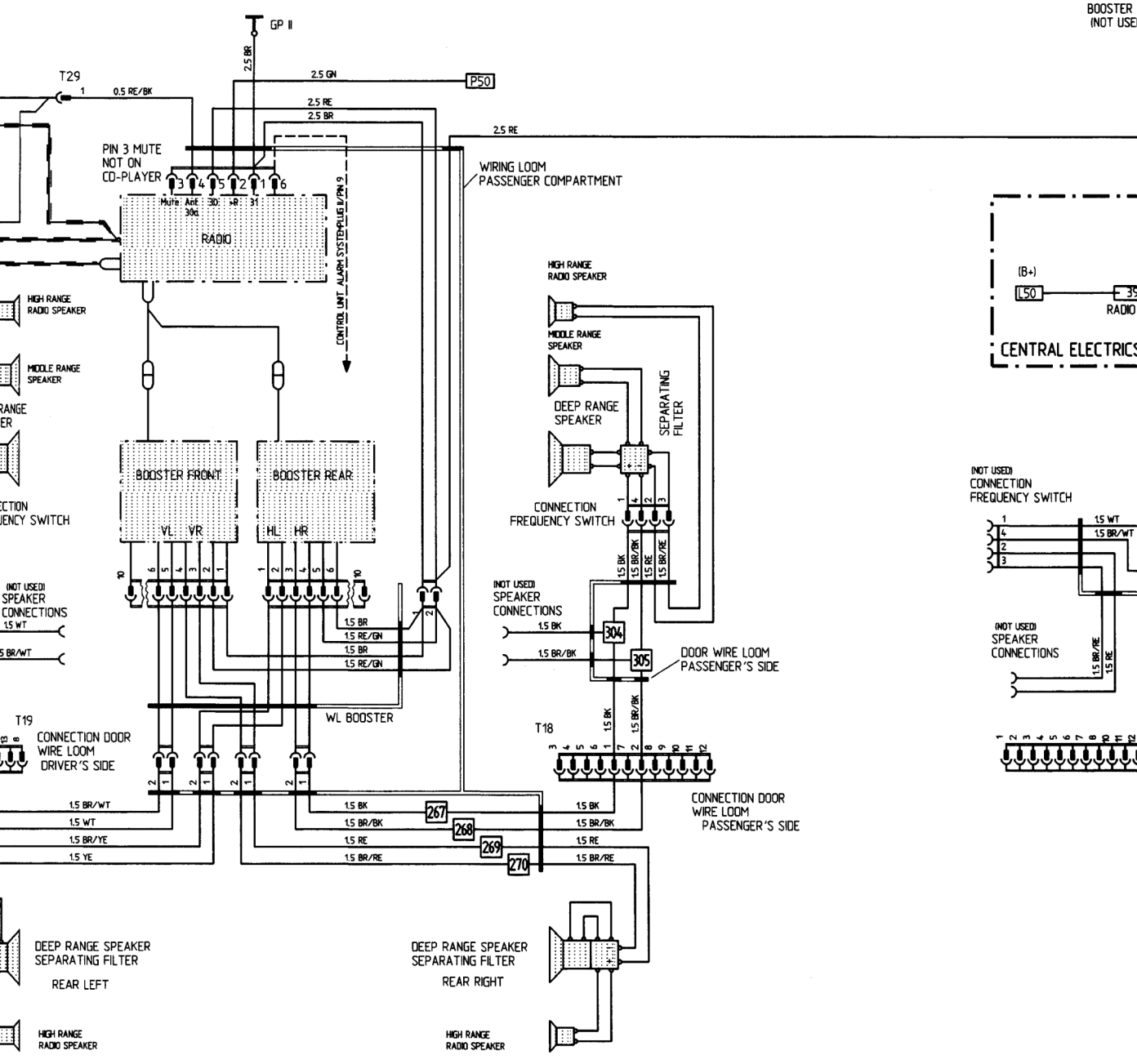

CONNECTING POINT

WELDING POINT CONNECTION WITH FIELD INDICATION

CONNECTION WITH FIELD DATA

GP GROUND POINT

WT = WHITE YE = YELLOW RE = RED VI = VIOLET BL = BLUE GN = GREEN GR = GREY BR = BROWN BK = BLACK

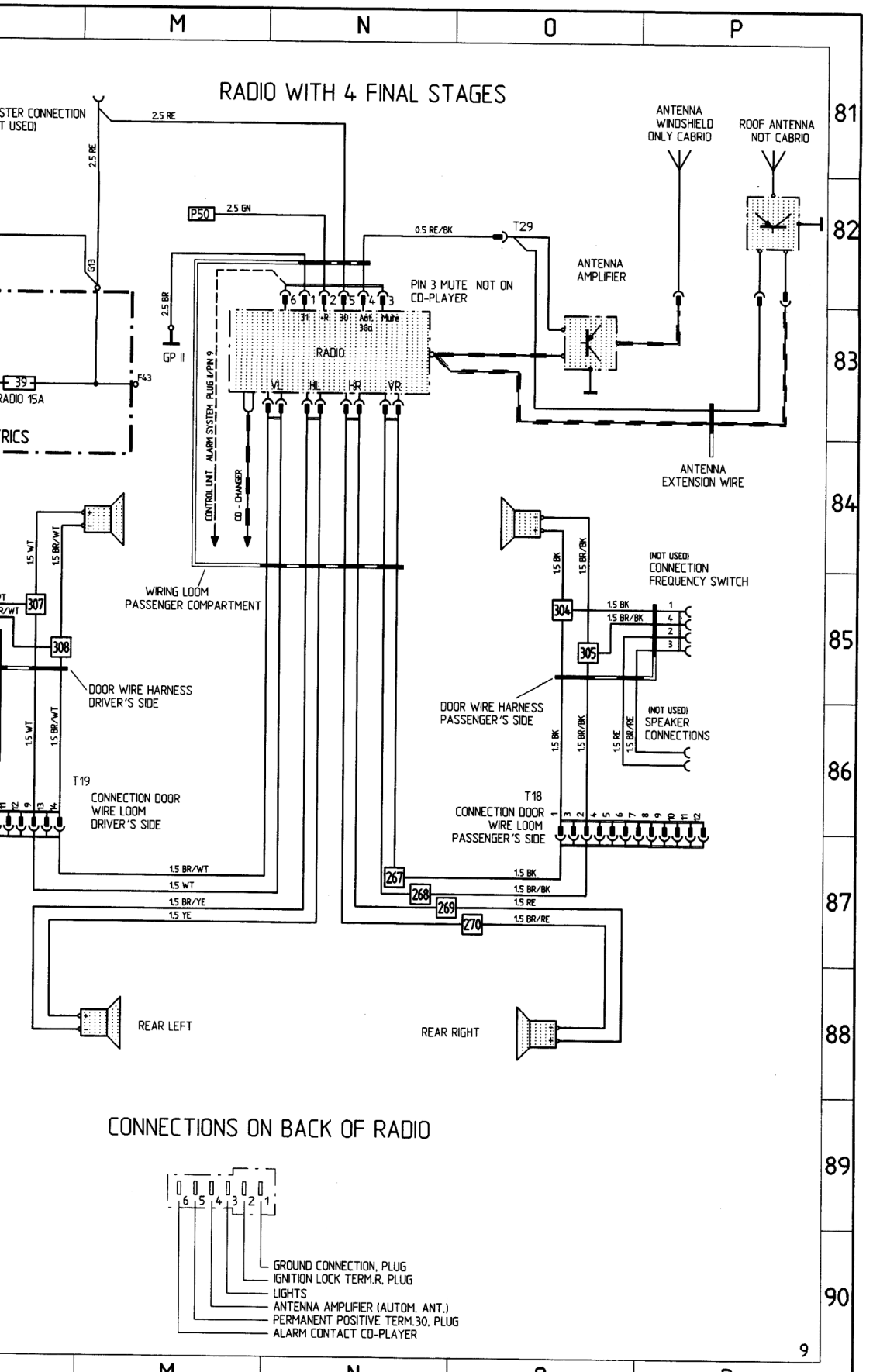
M
N
O
P
81
82
83
84
85
86
87
88
89
90
RADIO WITH 4 FINAL STAGES
STER CONNECTION
T USED)
2.5 RE
2.5 RE
G13
39
RADIO 15A
F43
TRICS
P50
2.5 GN
0.5 RE/BK
T29
ANTENNA
WINDSHIELD
ONLY CABRIO
ROOF ANTENNA
NOT CABRIO
ANTENNA
AMPLIFIER
PIN 3 MUTE NOT ON
CD-PLAYER
2.5 BR
GP II
RADIO
31 -R 30 Ant. Mute
30a
VL HL HR VR
CONTROL UNIT ALARM SYSTEM PLUG B/PIN 9
CD-CHANGER
ANTENNA
EXTENSION WIRE
WIRING LOOM
PASSENGER COMPARTMENT
1.5 WT
1.5 BR/WT
307
308
DOOR WIRE HARNESS
DRIVER'S SIDE
T19
CONNECTION DOOR
WIRE LOOM
DRIVER'S SIDE
1.5 BK
1.5 BR/BK
(NOT USED)
CONNECTION
FREQUENCY SWITCH
304
305
DOOR WIRE HARNESS
PASSENGER'S SIDE
1.5 RE
1.5 BR/RE
(NOT USED)
SPEAKER
CONNECTIONS
T18
CONNECTION DOOR
WIRE LOOM
PASSENGER'S SIDE
1.5 BR/WT
1.5 WT
1.5 BR/YE
1.5 YE
267
268
269
270
1.5 BK
1.5 BR/BK
1.5 RE
1.5 BR/RE
REAR LEFT
REAR RIGHT
CONNECTIONS ON BACK OF RADIO
6 5 4 3 2 1
GROUND CONNECTION, PLUG
IGNITION LOCK TERM.R, PLUG
LIGHTS
ANTENNA AMPLIFIER (AUTOM. ANT.)
PERMANENT POSITIVE TERM.30, PLUG
ALARM CONTACT CD-PLAYER
9

ABS, AIRBAG

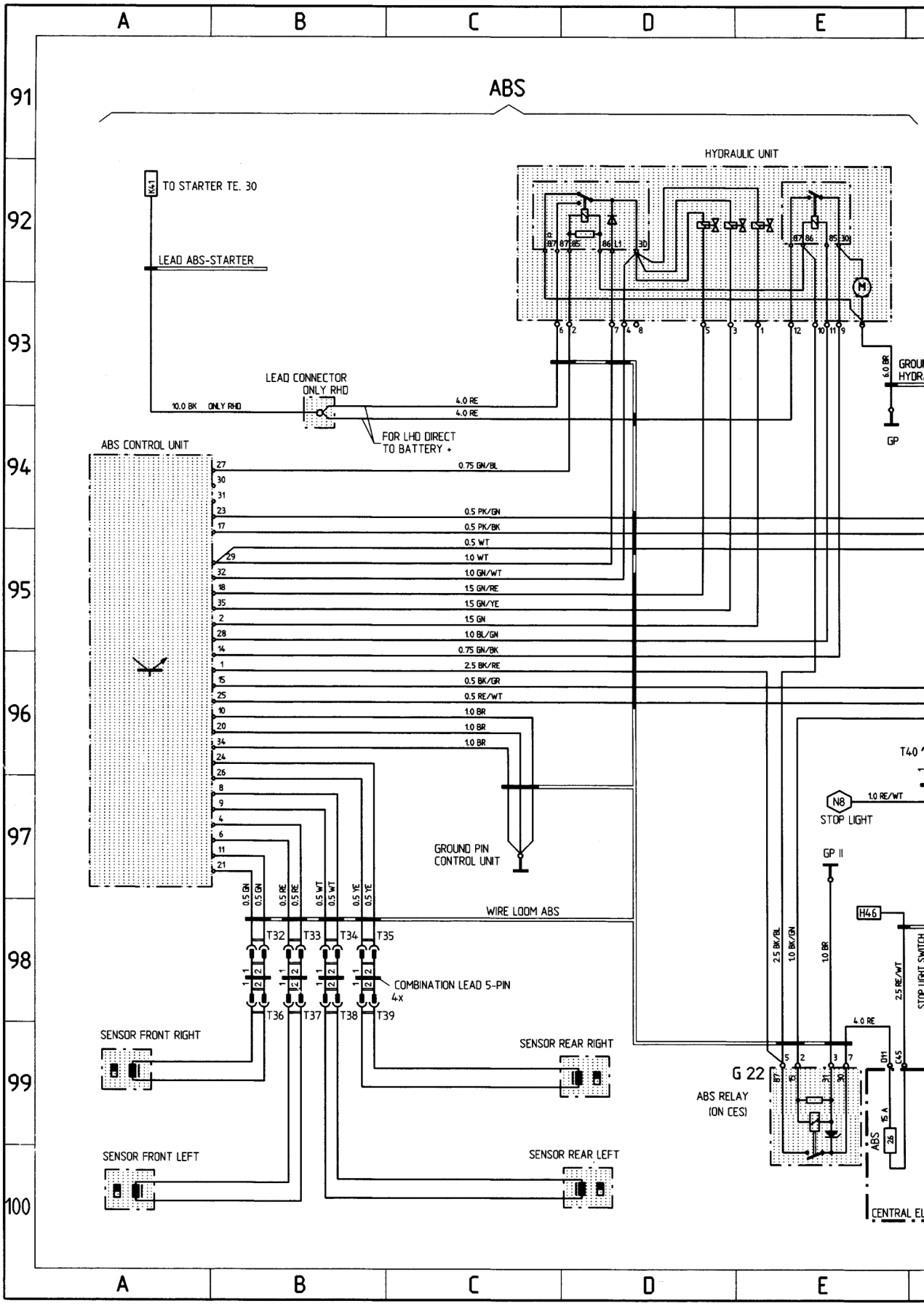
ABS
HYDRAULIC UNIT
TO STARTER TE. 30
LEAD ABS-STARTER
LEAD CONNECTOR ONLY RHD
10.0 BK ONLY RHD
4.0 RE
4.0 RE
FOR LHD DIRECT TO BATTERY +
ABS CONTROL UNIT
0.75 GN/BL
0.5 PK/GN
0.5 PK/BK
0.5 WT
1.0 WT
1.0 GN/WT
1.5 GN/RE
1.5 GN/YE
1.5 GN
1.0 BL/GN
0.75 GN/BK
2.5 BK/RE
0.5 BK/GR
0.5 RE/WT
1.0 BR
1.0 BR
1.0 BR
GROUND PIN CONTROL UNIT
WIRE LOOM ABS
T32
T33
T34
T35
T36
T37
T38
T39
COMBINATION LEAD 5-PIN 4x
SENSOR FRONT RIGHT
SENSOR REAR RIGHT
SENSOR FRONT LEFT
SENSOR REAR LEFT
GP
GP II
N8
1.0 RE/WT
STOP LIGHT
H46
G 22
ABS RELAY (ON CES)
4.0 RE
2.5 BK/BL
1.0 BK/GN
1.0 BR
2.5 RE/WT
ABS
15 A
26
CENTRAL EL

E F G H J K

AIRBAG

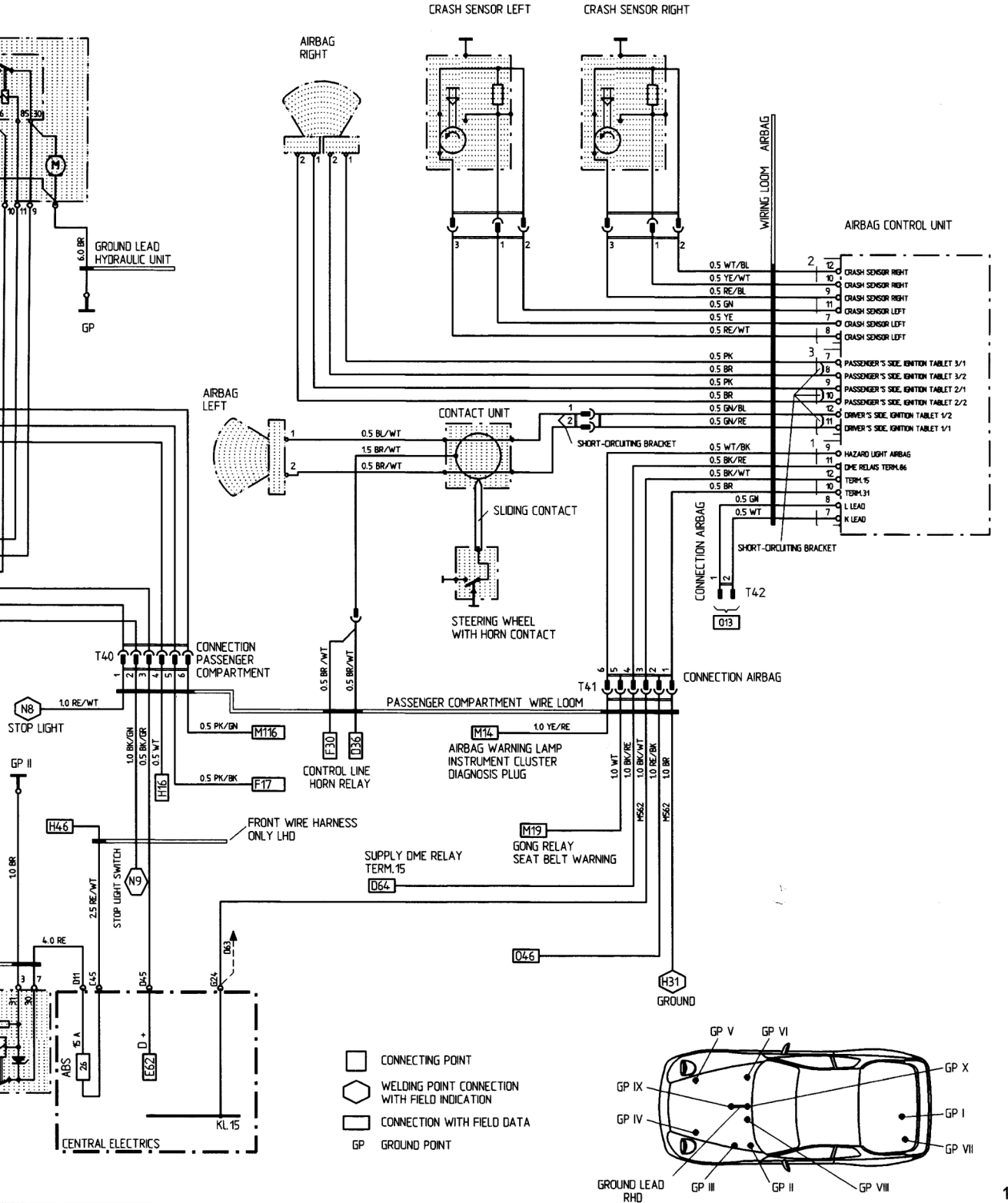

E F G H J K

91 92 93 94 95 96 97 98 99 100

WT = WHITE YE = YELLOW RE = RED VI = VIOLET BL = BLUE
GN = GREEN GR = GREY BR = BROWN BK = BLACK

WIRING 968 CABRIO

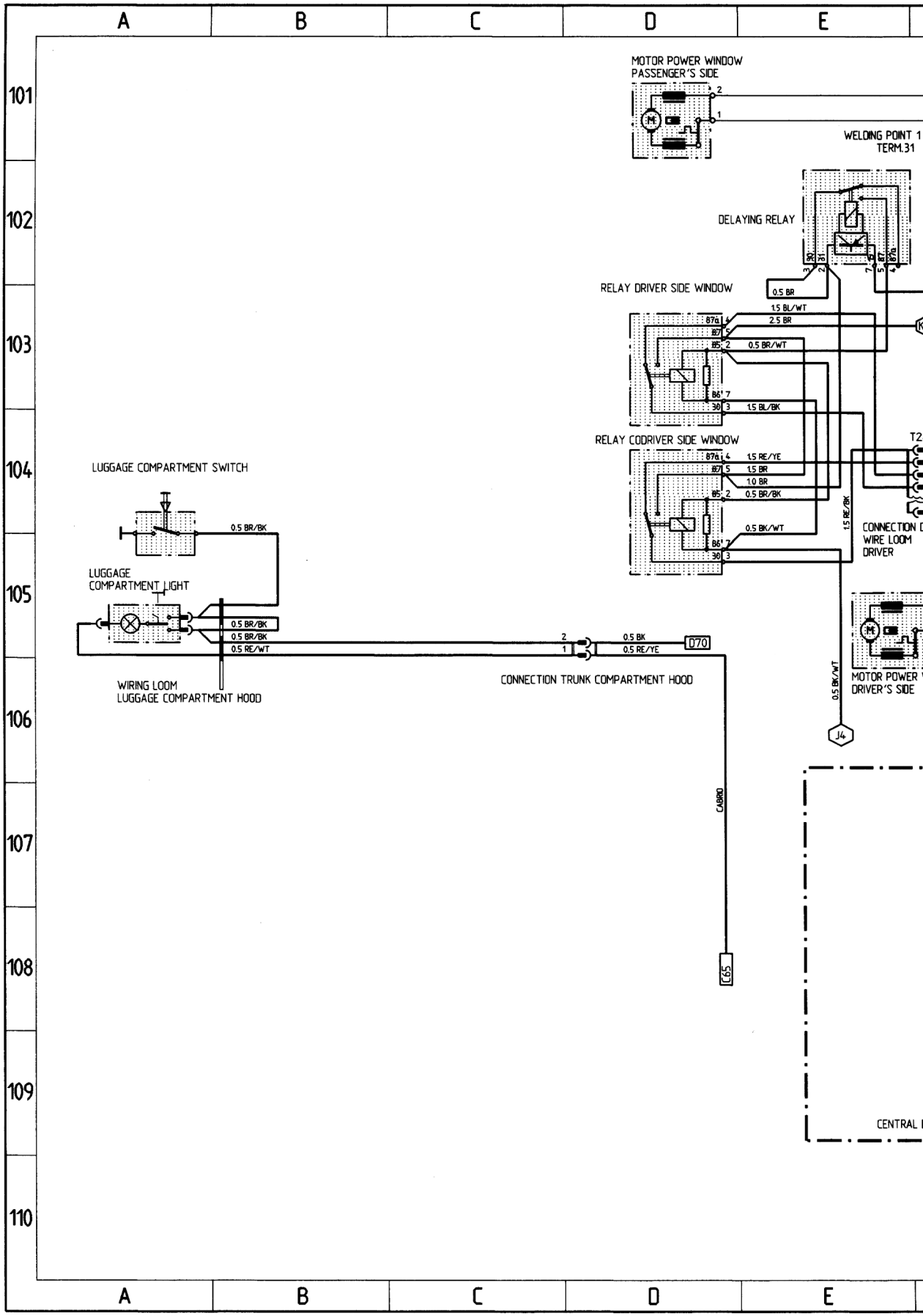

Printed in Germany - I. 1991

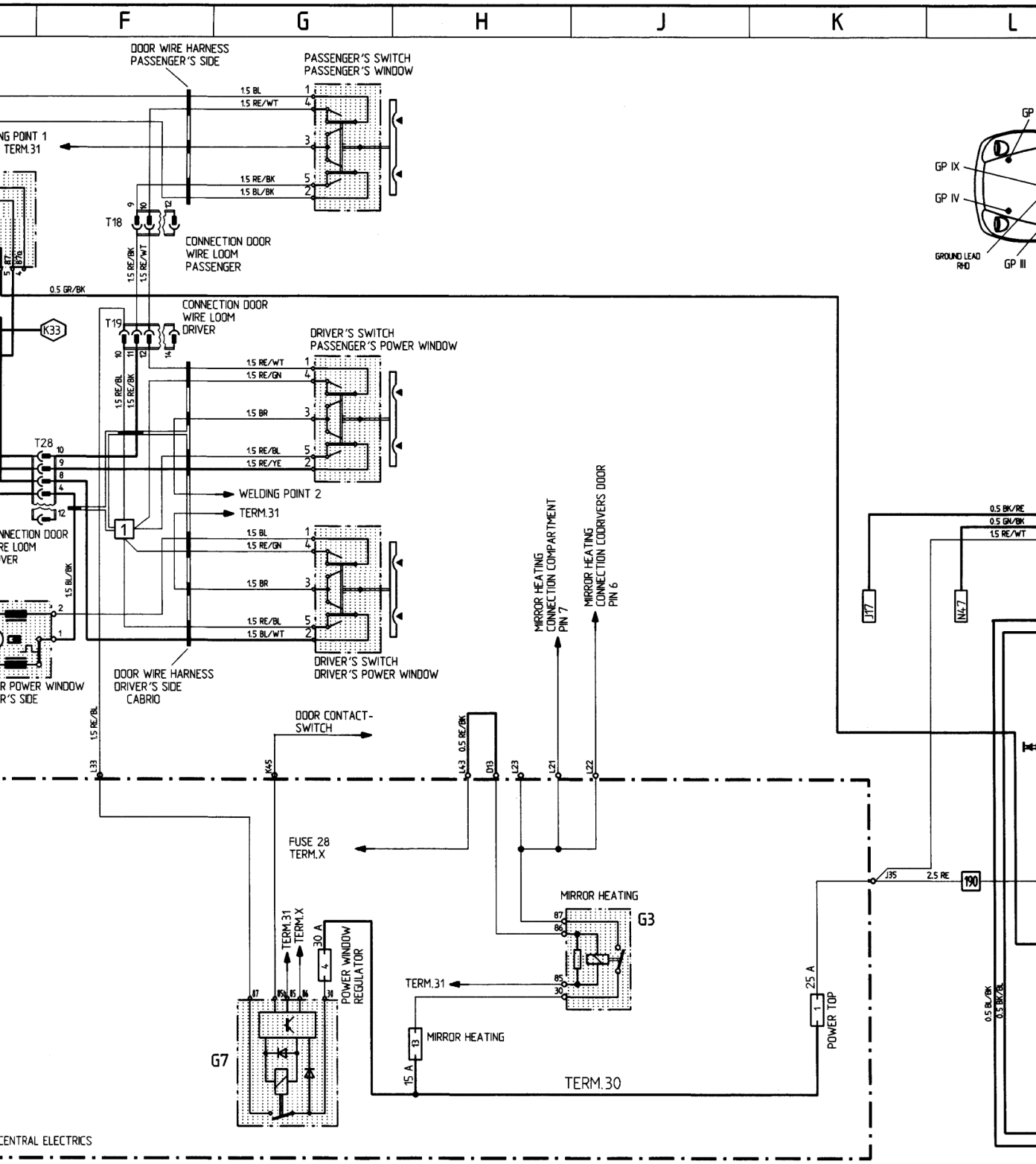
F
G
H
J
K
L
DOOR WIRE HARNESS PASSENGER'S SIDE
PASSENGER'S SWITCH PASSENGER'S WINDOW
1.5 BL
1.5 RE/WT
1.5 RE/BK
1.5 BL/BK
T18
CONNECTION DOOR WIRE LOOM PASSENGER
0.5 GR/BK
CONNECTION DOOR WIRE LOOM DRIVER
T19
K33
DRIVER'S SWITCH PASSENGER'S POWER WINDOW
1.5 RE/GN
1.5 BR
1.5 RE/YE
T28
WELDING POINT 2
TERM.31
1.5 BL/BK
DOOR WIRE HARNESS DRIVER'S SIDE CABRIO
DRIVER'S SWITCH DRIVER'S POWER WINDOW
MIRROR HEATING CONNECTION COMPARTMENT PIN 7
MIRROR HEATING CONNECTION COORIVERS DOOR PIN 6
0.5 BK/RE
0.5 GN/BK
J17
N47
DOOR CONTACT-SWITCH
0.5 RE/BK
FUSE 28 TERM.X
MIRROR HEATING
G3
TERM.31
TERM.X
30 A
POWER WINDOW REGULATOR
G7
MIRROR HEATING
15 A
TERM.30
25 A
POWER TOP
J35
2.5 RE
190
0.5 BL/BK
0.5 BK/BL
GP IX
GP IV
GP III
GROUND LEAD RHD
CENTRAL ELECTRICS
WT = WHITE
YE = YELLOW
RE = RED
VI = VIOLET
BL = BLUE
GN = GREEN
GR = GREY
BR = BROWN
BK = BLACK

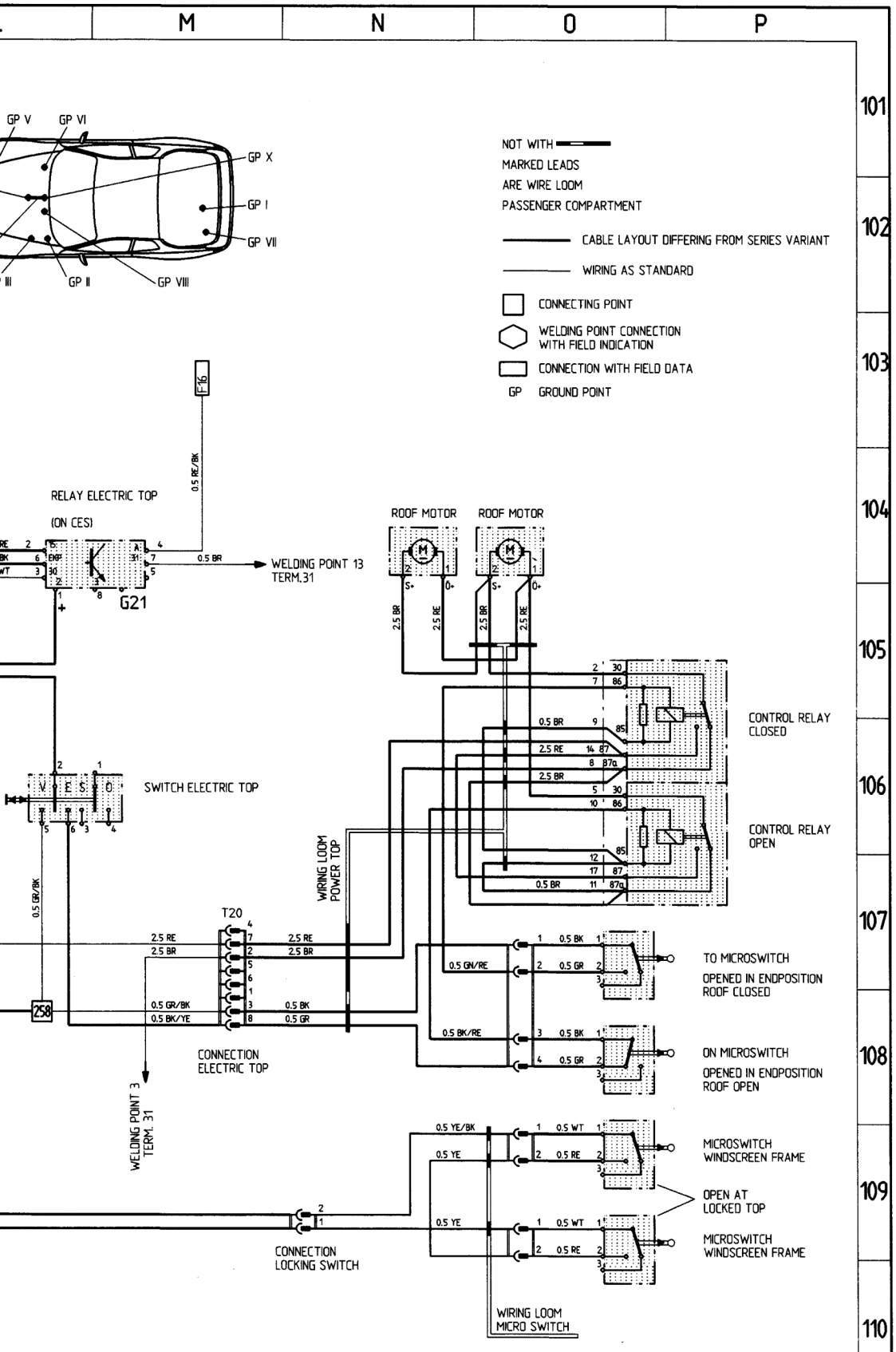
M
N
O
P
101
102
103
104
105
106
107
108
109
110
GP V
GP VI
GP X
GP I
GP VII
GP II
GP VIII
NOT WITH
MARKED LEADS
ARE WIRE LOOM
PASSENGER COMPARTMENT
CABLE LAYOUT DIFFERING FROM SERIES VARIANT
WIRING AS STANDARD
CONNECTING POINT
WELDING POINT CONNECTION WITH FIELD INDICATION
CONNECTION WITH FIELD DATA
GP GROUND POINT
F16
0.5 RE/BK
RELAY ELECTRIC TOP
(ON CES)
G21
WELDING POINT 13
TERM.31
0.5 BR
ROOF MOTOR
ROOF MOTOR
2.5 BR
2.5 RE
SWITCH ELECTRIC TOP
WIRING LOOM
POWER TOP
CONTROL RELAY
CLOSED
CONTROL RELAY
OPEN
0.5 GR/BK
T20
2.5 RE
2.5 BR
0.5 GR/BK
0.5 BK/YE
0.5 BK
0.5 GR
0.5 GN/RE
0.5 BK/RE
258
CONNECTION
ELECTRIC TOP
WELDING POINT 3
TERM. 31
TO MICROSWITCH
OPENED IN ENDPOSITION
ROOF CLOSED
ON MICROSWITCH
OPENED IN ENDPOSITION
ROOF OPEN
0.5 YE/BK
0.5 YE
0.5 WT
0.5 RE
MICROSWITCH
WINDSCREEN FRAME
OPEN AT
LOCKED TOP
MICROSWITCH
WINDSCREEN FRAME
CONNECTION
LOCKING SWITCH
WIRING LOOM
MICRO SWITCH
11

968 MODEL 92 SHEET 12

CONTROL UNIT AUTOMATIC TRANSMISSION

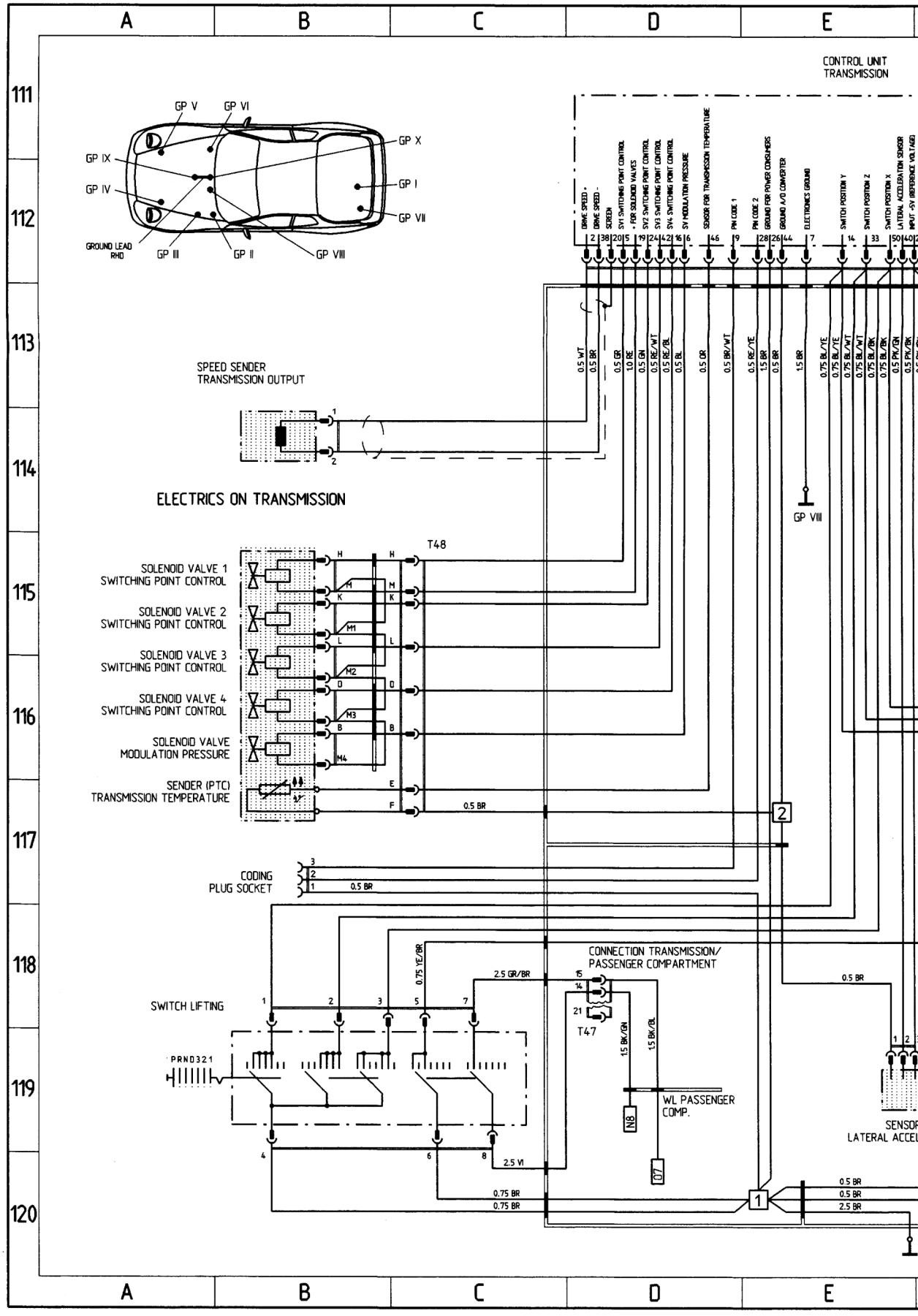

Printed in Germany - I, 1991

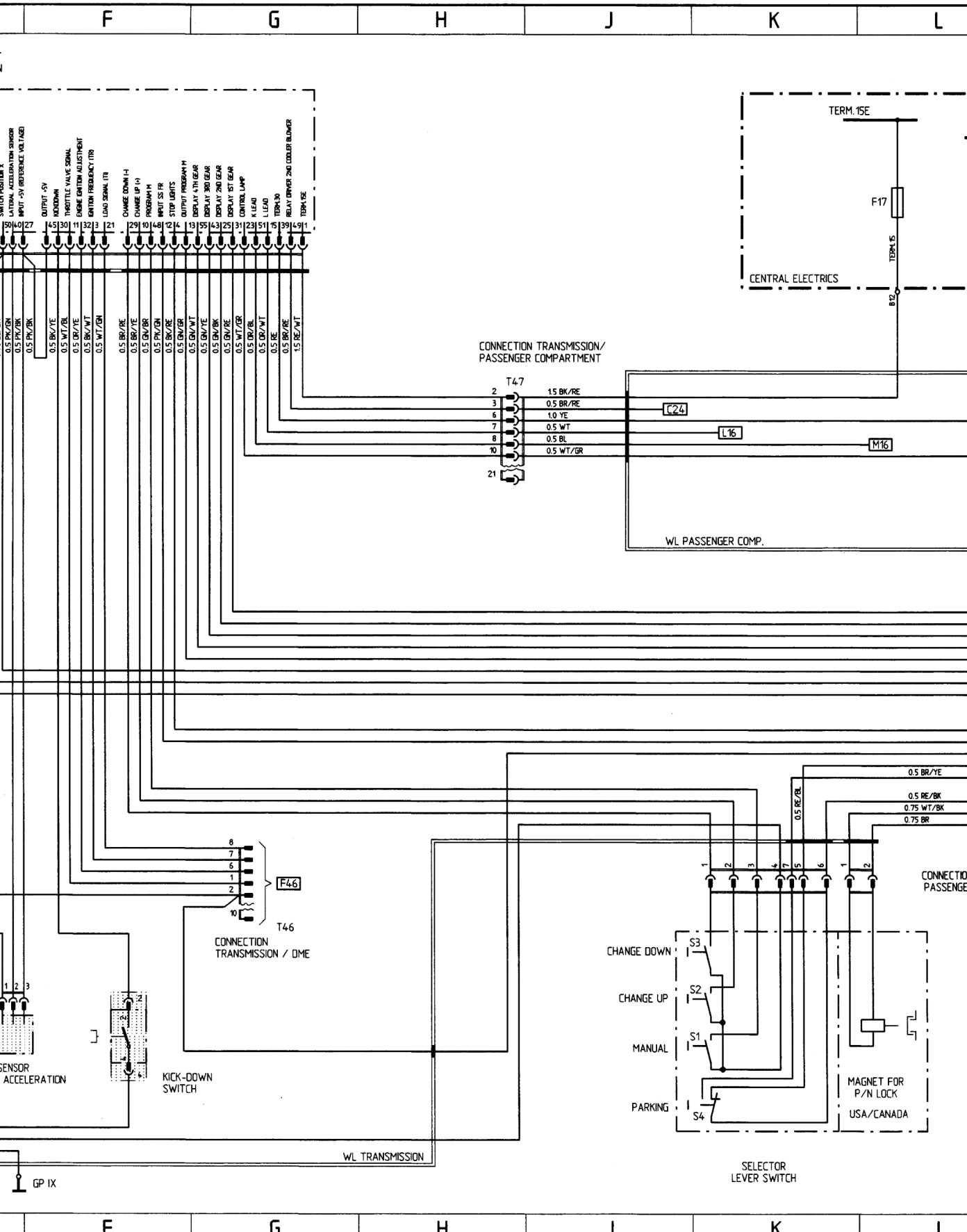
F
G
H
J
K
L
TERM.15E
F17
TERM.15
B12
CENTRAL ELECTRICS
CONNECTION TRANSMISSION/
PASSENGER COMPARTMENT
T47
2
3
6
7
8
10
21
1.5 BK/RE
0.5 BR/RE
1.0 YE
0.5 WT
0.5 BL
0.5 WT/GR
C24
L16
M16
WL PASSENGER COMP.
SWITCH POSITION X
LATERAL ACCELERATION SENSOR
INPUT +5V REFERENCE VOLTAGE
OUTPUT +5V
KICKDOWN
THROTTLE VALVE SIGNAL
ENGINE IGNITION ADJUSTMENT
IGNITION FREQUENCY ITR
LOAD SIGNAL ITR
CHANGE DOWN (-)
CHANGE UP (+)
PROGRAM M
INPUT SS FR
STOP LIGHTS
OUTPUT PROGRAM M
DISPLAY 4TH GEAR
DISPLAY 3RD GEAR
DISPLAY 2ND GEAR
DISPLAY 1ST GEAR
CONTROL LAMP
K LEAD
L LEAD
TERM.30
RELAY DRIVER 2ND COOLER BLOWER
TERM.15E
50 40 27 45 30 11 32 3 21 29 10 48 12 4 13 55 43 25 31 23 51 15 39 49 1
0.5 PK/GN
0.5 PK/BK
0.5 PK/BK
0.5 BK/YE
0.5 WT/BL
0.5 GR/YE
0.5 BK/WT
0.5 WT/GN
0.5 BR/RE
0.5 BR/YE
0.5 GN/BR
0.5 PK/GN
0.5 BK/RE
0.5 GN/GR
0.5 GN/WT
0.5 GN/YE
0.5 GN/BK
0.5 GN/RE
0.5 WT/GR
0.5 GR/BL
0.5 OR/WT
0.5 RE
0.5 BR/RE
1.5 RE/WT
8
7
6
1
2
10
F46
T46
CONNECTION
TRANSMISSION / DME
1 2 3
SENSOR
ACCELERATION
KICK-DOWN
SWITCH
WL TRANSMISSION
GP IX
0.5 BR/YE
0.5 RE/BL
0.5 RE/BK
0.75 WT/BK
0.75 BR
1 2 3 4 7 5 6 1 2
CONNECTIO
PASSENGE
CHANGE DOWN
CHANGE UP
MANUAL
PARKING
S3
S2
S1
S4
MAGNET FOR
P/N LOCK
USA/CANADA
SELECTOR
LEVER SWITCH

A | B | C | D | E

CONSTRUCTION COMPONENTS

DESIGNATION, FUNCTION	POSITION IN VEHICLE LHD	RHD	NOTE	FIELD IN WIRING DIAGRAMM
ALARM-PRIMED INDICATOR LAMP LEFT	12bR	12bR	IN PUSH-BUTTON OF LEFT DOOR	066
ALARM-PRIMED INDICATOR LAMP RIGHT	12bK	12bK	IN PUSH-BUTTON OF RIGHT DOOR	062
ALARM HORN	7bL	7bL	IN WATER BOX	F69
ALARM SWITCH ENGINE HOOD	2cO	2cO	ENGINE HOOD LOCK	A63
ANTENNA AMPLIFIER	7cL	7cL	IN FOOTWELL, RIGHT SIDE	E82,083
BATTERY	6cL	—	IN WATER BOX	H42
BATTERY	—	16cR	IN LEFT BOHLMANN COMPARTMENT	H42
STOP LIGHT SWITCH	7dP	7dM	TO FOOT CONTROLS	09
CABRIO: ROOF MOTORS	14cN/O	14cN/O	BELOW THE PARCEL TRAY	N/O104
CABRIO: MOTOR POWER WINDOW PASSENGER'S SIDE	9dK	9dR	IN PASSENGER'S DOOR	O101
CABRIO: MOTOR POWER WINDOW DRIVER'S SIDE	9dR	9dK	ON DRIVER'S DOOR	E105
CABRIO: RELAY CODRIVER SIDE WINDOW	6dM	6dP	IN PASSENGER'S FOOTWELL	O104
CABRIO: RELAY DRIVER SIDE WINDOW	6dM	6dP	IN PASSENGER'S FOOTWELL	O103
CABRIO: POWER TOP			(G21) CES	M104
CABRIO: CONTROL RELAY ROOF WITH MICROSWITCHES	14cM	14cM	IN LUGGAGE COMPARTMENT ON FIREWALL	O105-110
CABRIO: DELAYING RELAY	6dM	6dP	IN PASSENGER'S FOOTWELL	E102
CODING PLUG SOCKET	7dM	7dP	IN PASSENGER'S FOOTWELL	B50
DIAGNOSIS PLUG SOCKET	7dM	7dP	IN PASSENGER'S FOOTWELL	M12
SPEED SENDER / DME	6cN	6cN	ABOVE FLYWHEEL	B49
SPEED SENDER CU TRANSMISSION	14dM	14dM	BY TRANSMISSION RIGHT	B114
PRESSURE SWITCH AIR CONDITIONING SYSTEM	3dQ	3dQ	IN ENGINE COMPARTMENT FRONT LEFT	A24-25
ELECTRICS ON TRANSMISSION	15/16dP	15/16dP	IN TRANSMISSION	B115-117
TWO-TONE HORN 1	3cQ	3cQ	IN FRONT LEFT FENDER	A39
TWO-TONE HORN 2	3cQ	3cQ	IN FRONT LEFT FENDER	A40
CRASH SENSOR LEFT	7cQ	—	INSIDE FIREWALL LEFT	G95
CRASH SENSOR RIGHT	7cL	—	INSIDE FIREWALL RIGHT	G92
OUTSIDE TEMPERATURE SENSOR	6cN	6cN	IN HEATER BOX	A23
INSIDE TEMPERATURE SENSOR	8cM	8cP	IN CONTROL PANEL AREA	E21
GAS PRESSURE PROP LEFT	15bQ	15bQ	ON TAILGATE	K25
GAS PRESSURE PROP RIGHT	15bL	15bL	ON TAILGATE	L26
OIL PRESSURE SENDER/ PRESSURE SWITCH	3dM	3dM	ON ENGINE BLOCK BELOW OIL FILTER	F47
OIL TEMPERATURE SENDER	5cN	5cN	AT CRANKCASE	B44
COOLANT TEMP. SENDER	4cO	4cO	ON ENGINE BLOCK	B45
GENERATOR	3cO	3cO	ON ENGINE	J/K41/42
SEAT BELT CONTACT	10dO	10dN	TO BELT BUCKLE	C15
HALL SENDER	3cM	3cM	ON TOOTHED BELT HOUSING OVER	B46
HYDRAULIC UNIT	7dK	7dK	IN FRONT RIGHT FENDER	D/E92
CATALYTIC CONVERTER MONITOR (ONLY JAPAN)			(G24) ADDITIONAL CES	D20
KICK-DOWN SWITCH	7dO	7dN	TO FOOT CONTROLS	F119
AIR COMPRESSOR	3dO	3dO	ON ENGINE	A24
KNOCK SENSOR 1	5cN	5cN	ON ENGINE BLOCK	B47
KNOCK SENSOR 2	5cN	5cN	ON ENGINE BLOCK	B48
CONTACT UNIT AIRBAG	9bP	—	ON STEERING WHEEL	G/H95
PARKING BRAKE CONTACT	9dR	9dK	ON HAND BRAKE LEVER	C15-16
FUEL PUMP	15dL	15dL	ON BASE REAR RIGHT	N46-47
CLUTCH SWITCH	7dP	7dM	TO FOOT CONTROLS	N44-45
OXYGEN SENSOR	2dP	2dP	ON RADIATOR	B45-46
IDLE SPEED POSITIONER	5cO	5cO	ENGINE COMPARTMENT	B49
AIR FLOW SENSOR	3cP	3cP	ENGINE COMPARTMENT	F42

A | B | C | D | E

Printed in Germany - I , 1991

DESIGNATION, FUNCTION	POSITION IN VEHICLE LHD	RHD	NOTE	FIELD IN WIRING DIAGRAMM
MAGNET P/N LOCK (USA/CANADA)	9dN	—	AT SELECTOR LEVER SUPPORT	K/L119
MICRO SWITCH ROOF CLOSED	10aO	10aO	IN ROOF	K40
MOTOR POWER WINDOW PASSENGER'S SIDE	9dK	9dR	IN PASSENGER'S DOOR	D31
MOTOR POWER WINDOW DRIVER'S SIDE	9dR	9dK	ON DRIVER'S DOOR	D35
TAILGATE UNLOCKING MOTOR	18cM	18cM	IN LUGGAGE COMPARTMENT AT END-PANEL	G/H33
MOTOR LIFTING ROOF WITH CONTROL RELAY AND MICRO SWITCH	16dQ	16dQ	IN LEFT BOHLMANN COMPARTMENT	K36-40
MOTOR CONCEALED HEADLIGHT LEFT	2dP	2dP	AT LEFT HEADLAMP BODY	D1
MOTOR CONCEALED HEADLIGHT RIGHT	2dM	2dM	AT RIGHT HEADLAMP BODY	E1
FAN MOTOR 1	3cN	3cN	ON RADIATOR	A28
FAN MOTOR 2	3cN	3cN	ON RADIATOR	A27
MOTOR WINDSHIELD WIPER	7bO	7bN	IN WATER BOX	H/J25-27
THROTTLE VALVE POTENTIOMETER	4/5cO	4/5cO	ON THROTTLE VALVE ASSEMBLY	B47
HEADLIGHT CLEANERS PUMP (HCS)	6cL	6cL	IN FRONT RIGHT FENDER	A25-26
PUMP WINDSCREEN WASH	6cL	6cL	IN FRONT RIGHT FENDER	A26
RELAY ABS			(G22) CES	E99
RELAY AC			(G19) CES	A22
RELAY FOG LIGHT CUTOFF (ONLY JAPAN)			(G26) ADDITIONAL CES	H1
RELAY START LOCK (ONLY AUTOMATIC-TRANSMISSION)			(G20) CES	P44
RELAY DAYTIME RUNNING LIGHT (ONLY CANADA)			(G26) ADDITIONAL CES	L3
COOLANT TEMP. SWITCH AND SENDER	4dP	4dP	ON ENGINE BLOCK	E/F47
SWITCH TAILGATE UNLOCKING	7dQ	7dL	IN DRIVER'S FOOTWELL	F31
SWITCH COOLING WATER TEMPERATURE	2dP	2dP	ON RADIATOR	A29-30
SWITCH OIL LEVEL WARNING	6eN	6eN	UNDER THE ENGINE ON OIL PAN	F43
SWITCH BACKUP LIGHT	15dO	15dO	(ONLY TRANSMISSION)	07-8
FLOAT SWTCH BRAKE FLUID	6cP	6cM	IN BRAKE FLUID RESERVOIR	C18
SENSOR LATERAL ACCELERATION	8eN	8eN	UNDER THE RIGHT SEAT	E119
STARTER	7cN	7cN	ON CLUTCH BELL HOUSING	L42
DRIVE LEFT HEADLIGHT VERTICAL AIM CONTROL	2cP	2cP	ON HEADLIGHT LEFT	A6
DRIVE RIGHT HEADLIGHT VERTICAL AIM CONTROL	2cM	2cM	ON HEADLIGHT RIGHT	A5
DRIVE LEFT CENTRAL LOCK	11cR	11cR	IN DOOR LEFT	064-65
DRIVE RIGHT CENTRAL LOCK	11cK	11cK	IN DOOR RIGHT	067-68
DRIVE CRUISE CONTROL	6cL	6cL	ENGINE COMPARTMENT	L44
CONTROL UNIT ABS	7cL	7cL	IN FOOTWELL, RIGHT SIDE	A94-97
CONTROL UNIT AIRBAG	6cM	—	IN PASSENGER'S FOOTWELL	K93-96
CONTROL UNIT ALARM SYSTEM/CENTRAL LOCKING SYSTEM	6dM	6dP	IN PASSENGER'S FOOTWELL	D-F65-67
CONTROL UNIT DME	6dM	6dP	IN PASSENGER'S FOOTWELL	D42-50
CONTROL UNIT TRANSMISSION	15cK	15cK	IN REAR RIGHT FENDER	D-G111-112
CONTROL UNIT GONG			(G25) ADDITIONAL CES	K/L19-20
CONTROL UNIT LIFTING ROOF			(G21) CES	H35
CONTROL UNIT LIGHT COMBINATION			(G17+G18) CES	F/G2
CONTROL UNIT P/N LOCK (USA/CANADA)			(G23) ADDITIONAL CES	0119
CONTROL UNIT CRUISE CONTROL	7cR	7cR	IN LEFT FOOTWELL	M44/45
CU SEAT HEATER LEFT SEAT	10dQ	10dQ	UNDER THE SEAT	O/P25-26
CU SEAT HEATER RIGHT SEAT	10dL	10dL	UNDER THE SEAT	L21
BUZZER CONTACT	8cP	8cM	ON IGNITION LOCK	J18
FUEL LEVEL SENDER	15dN	15dN	IN FUEL TANK	C17
TEMPERATURE SENSOR FOR CATALYZER	9eN	9eN	ON CATALYZER	C19
VALVE CAMSHAFT CONTROL	5cM	5cM	AT CYLINDER HEAD COVER	B44
VALVE TANK VENTING	6cQ	6cQ	ENGINE COMPARTMENT (ONLY CAT.)	B43
CENTRAL ELECTRICS	7bQ	7bQ	LEFT IN WATER BOX	SHEET 6
ADDITIONAL CES	6cP	—	LEFT TO STEERING COLUMN	SHEET 6
ADDITIONAL CES	—	6cQ	LEFT TO GLOVE BOX	SHEET 6
IGNITION COIL	3cL	3cL	WHEEL HOUSING RIGHT FRONT	J45

L M N O P

1 2 3 4 5 6 7 8 9 10 11 12 13 14 15 16 17 18

a b c d e

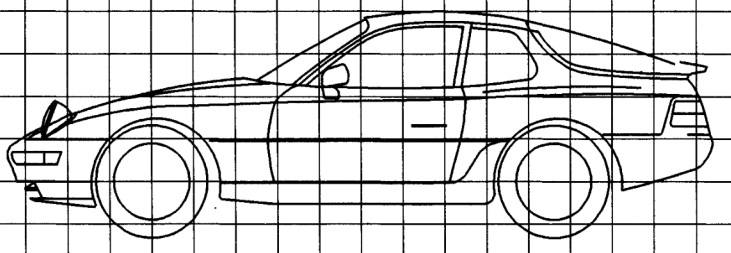

K L M N O P Q R

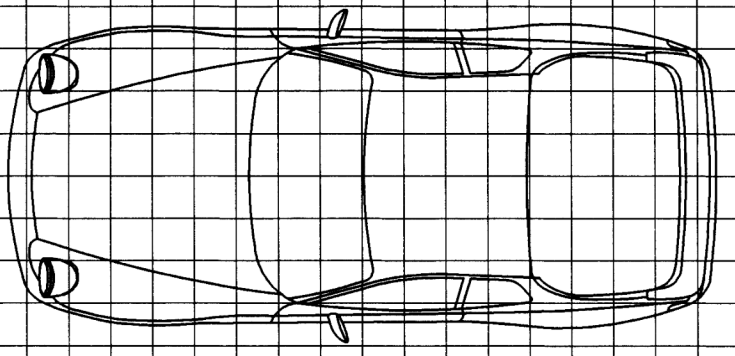

1 2 3 4 5 6 7 8 9 10 11 12 13 14 15 16 17 18

13

L M N O P

PLUG CONNECTIONS AND GROUND POINTS

A | B | C | D | E

PLUG CONNECTIONS

CODE	NUMBER OF PINS	DESIGNATION, FUNCTION	POSITION IN VEHICLE LHD	POSITION IN VEHICLE RHD	NOTE
T1	14	WL PASSENGER COMPARTMENT / WL DME	6dM	6dP	IN PASSENGER'S FOOTWELL
T2					
T3					
T4	2	BRAKE PAD WEAR CONTACT FRONT RIGHT / COMBI. LEAD	5dL	5dL	LOW ON SHOCK ABSORBER
T5	2	COMB. LEAD RIGHT / WH FRONT (BVA)	6cL	6cL	ENGINE COMPARTMENT
T6	2	COMB. LEAD LEFT / WH FRONT (BVA)	6cQ	6cQ	ENGINE COMPARTMENT
T7	2	BRAKE PAD WEAR CONTACT FRONT LEFT / COMBI. LEAD	5dQ	5dQ	LOW ON SHOCK ABSORBER
T8	2	BRAKE PAD WEAR CONTACT REAR RIGHT / COMBI. LEAD	14dL	14dL	ON SEMI-TRAILING ARM
T9	2	COMB. LEAD RIGHT / WH PASSENGER COMP.	15dM	15dM	ABOVE DRIVE SHAFTS ON
T10	2	COMB. LEAD LEFT / WH PASSENGER COMP.	15dP	15dP	LUGGAGE COMPARTMENT PANEL
T11	2	BRAKE PAD WEAR CONTACT REAR LEFT / COMBI. LEAD	14dQ	14dQ	ON SEMI-TRAILING ARM
T12	6	WH HEATER, AIR CONDITIONING, PASSENGER COMP.	7cO/N	7cO/N	IN CONTROL PANEL AREA
T13	7	WH PASSENGER COMPARTMENT / ENGINE HOOD	6bP	6bP	IN ENGINE HOOD
T14	8	SEAT RIGHT / WH PASSENGER COMPARTMENT	11eM	11eM	LOW ON SEAT
T15	8	SEAT LEFT / WH PASSENGER COMPARTMENT	11eP	11eP	LOW ON SEAT
T16	4	REAR WINDOW WIPER, HIGH MOUNTED STOP LIGHT/ WL PASSENGER COMP. ONLY COUPE	14cQ	14cQ	BEHIND C-PILLAR
T17					
T18	12	WL PASSENGER COMPARTMENT / WL PASSENGER'S DOOR ONLY COUPE	7dK	7dR	IN PASSENGER'S FOOTWELL
T18	12	WL PASSENGER COMPARTMENT / WL PASSENGER'S DOOR ONLY CABRIO	7dK	7dR	IN PASSENGER'S FOOTWELL
T19	14	WL PASSENGER COMPARTMENT / WL DRIVER'S DOOR ONLY COUPE	7dR	7dK	IN DRIVER'S FOOTWELL
T19	14	WL PASSENGER COMPARTMENT / WL DRIVER'S DOOR ONLY CABRIO	7dR	7dK	IN DRIVER'S FOOTWELL
T20	8	WL PASSENGER COMPARTMENT / WL SUN ROOF ONLY COUPE	16dQ	16dQ	IN BOHLMANN COMPARTMENT
T20	8	WL PASSENGER COMPARTMENT / WL POWER TOP ONLY CABRIO	16dQ	16dQ	IN BOHLMANN COMPARTMENT
T21	14	WIRE HARNESS DME / WIRE HARNESS FRONT	6cP	6cP	ENGINE COMPARTMENT
T22	2	CODING PLUG / DME	6dM	6dP	IN PASSENGER'S FOOTWELL
T23					
T24	2	WH ALTERN. STARTER / WH FRONT	6cO	6cO	ENGINE COMPARTMENT
T25					
T26	19	DIAGNOSIS PLUG	6dL	6dO	IN PASSENGER'S FOOTWELL
T27	12	WL PASSENGER COMPARTMENT / WL PASSENGER'S DOOR	7dK	7dR	IN PASSENGER'S FOOTWELL
T28	12	WL PASSENGER COMPARTMENT / WL DRIVER'S DOOR	7dR	7dK	IN DRIVER'S FOOTWELL
T29	1	ANTENNA AMPLIFIER / WH PASSENGER COMP.	7cO	7cO	BEHIND THE RADIO
T30					
T31					
T32	2	WL ABS / COMBINATION LEAD FR	6cL	6cL	ENGINE COMPARTMENT
T33	2	WL ABS / COMBINATION LEAD FL	6cQ	6cQ	ENGINE COMPARTMENT
T34	2	WL ABS / COMBINATION LEAD RL	15dP	15dP	ABOVE DRIVE SHAFTS
T35	2	WL ABS / COMBINATION LEAD RR	15dM	15dM	ON LUGGAGE COMPARTMENT PANEL
T36	2	COMB. LEAD FR / ABS-SENSOR FR	5dL	5dL	LOW ON SHOCK ABSORBER
T37	2	COMB. LEAD FL / ABS-SENSOR FL	5dQ	5dQ	LOW ON SHOCK ABSORBER
T38	2	COMB. LEAD RL / ABS-SENSOR RL	14dQ	14dQ	ON SEMI-TRAILING ARM
T39	2	COMB. LEAD RR / ABS-SENSOR RR	14dL	14dL	ON SEMI-TRAILING ARM
T40	6	WL PASSENGER COMPARTMENT / WL ABS	6dM	6dM	IN FOOTWELL, RIGHT SIDE
T41	6	WL PASSENGER COMPARTMENT / WL AIRBAG	6dM	—	IN PASSENGER'S FOOTWELL
T42	2	WL PASSENGER COMPARTMENT / WL AIRBAG	6cM	—	IN PASSENGER'S FOOTWELL
T43	3	SPEED- REFERENCE MARK SENDER / DME	6cN	6cN	ON ENGINE REAR
T44	3	OXYGEN SENSOR / DME	6cN	6cN	ON ENGINE REAR
T45	2	WL PASSENGER COMPARTMENT/ FUEL PUMP	13dM	13dM	AT TRANSMISSION SUPPORT
T46	10	WL DME / WL TRANSMISSION	7cM	7cP	IN PASSENGER'S FOOTWELL
T47	21	WL PASSENGER COMPARTMENT / WL TRANSMISSION	7cK	7cL	IN PASSENGER'S FOOTWELL
T48	8	WL TRANSMISSION/ ELECTRICS ON TRANSMISSION ONLY M249	15/16dP	15/16dP	ON GEARBOX

A | B | C | D | E

Printed in Germany - I . 1991

	FIELD IN WIRING DIAGRAMM
	N15, F44/45
	A15
	A16
	A18
	A19
	P15
	P16
NEL	P18
	P19
	D23
	J27/28, B64
	L22
	N27
	O23
	BC32, HJ86, OP86
	F102, HJ86, OP86
	BC34, E86, L86
	F103, E86, L86
	H38
	M107/108
	G48/49
	A50
	J43
	L/N12
	M63-65
	M68,E/F104
	F82, 082
	B98
	B98
	B98
PANEL	B98
	B98
	B98
	B98
	B98
	F96
	H97
	J96, 013
	B49
	B45/46
	M47
	F46, G118
	D118, H114, N114, L117
	C115-117

GROUND POINTS

CODE	DESIGNATION, FUNCTION	POSITION IN VEHICLE LHD	RHD
MP I	COVER PANEL	18cO	18cO
MP II	INSIDE FIREWALL ELECTRONICS CHASSIS	7cP	7cP
MP III	INSIDE FIREWALL CABLE TO GROUND	7cP	7cP
MP IV	LONGITUDINAL SUPPORT	3dP	3dP
MP V	LONGITUDINAL SUPPORT	3dM	3dM
MP VI	BODY BATTERY LHD	6cL	—
MP VII	BODY BATTERY RHD	—	16cQ
MP VIII	ENGINE BLOCK DME ELECTRONICS CHASSIS	6cO	6cO
MP IX	CLUTCH BELL HOUSING BATTERY LEAD LHD DME CABLE TO GROUND	7cO	7cO
MP X	BODY RHD FIREWALL	—	7cO

M - NUMBERS

M 113	CANADA VERSION
M 139	SEAT HEATER SEAT LEFT
M 150	WITHOUT CATALYZER
M 193	JAPAN VERSION
M 215	SAUDI-ARABIA VERSION
M 249	AUTOMATIC TRANSMISSION
M 288	HEADLIGHT CLEANING SYSTEM
M 340	SEAT HEATER SEAT RIGHT
M 454	CRUISE CONTROL
M 480	6-RANGE-TRANSMISSION
M 484	USA VERSION
M 490	AUDIO OPTION PACK WITHOUT BOOSTER
M 553	USA - CANADA VERSION
M 562	AIRBAG
M 573	AIR CONDITIONING SYSTEM
M 605	HEADLIGHT VERTICAL AIM CONTROL
M 650	LIFTING ROOF

M N O P

1 2 3 4 5 6 7 8 9 10 11 12 13 14 15 16 17 18

a b c d e

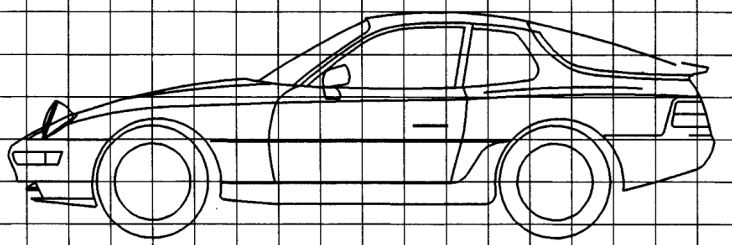

K L M N O P Q R

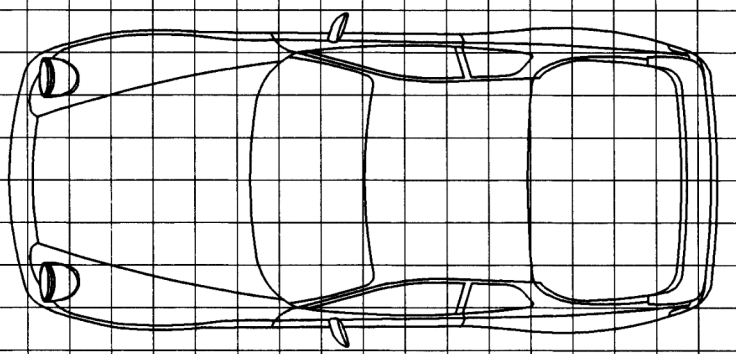

1 2 3 4 5 6 7 8 9 10 11 12 13 14 15 16 17 18

14

M N O P

Wiring Diagram Type 968 Model 93

	Coordinates	
Sheet 1	1 - 10	Lights
Sheet 2	11 - 20	Instrument Cluster and Sensor
Sheet 3	21 - 30	Heating, Airconditioning, Ventilating, Power Seats, Wipe- and Wash Cleaners
Sheet 4	31 - 40	Two-Tone Horns, Mirrors, Lifting Roof, Power Window Regulator, Tailgate Unlocking
Sheet 5	41 - 50	Engine Compartment, Cruise Control
Sheet 6	51 - 60	Central Electric
Sheet 7	61 - 70	Central Locks, Alarm System
Sheet 8	71 - 80	Fog Light, Rear Fog Light
Sheet 9	81 - 90	Radio
Sheet 10	91 - 100	ABS, Airbag
Sheet 11	101 - 110	Wiring 968 Cabriolet
Sheet 12	111 - 120	Tiptronic
Sheet 13		Construction Components
Sheet 14		Plug Connections, Ground Points, M-Numbers, Abbreviations
Sheet 15		Wiring 968 CS

Printed in Germany - VII, 1992

Wiring Diagram Type 968
Model 93

The wiring diagram consists of 12 individual wiring diagrams, 1 sheet construction components and 1 sheet plug connections and ground points. These are divided into coordinate fields.

Each individual wiring diagram contains a part of the central-electrics box in a dashdotted frame.

This part of the central-electrics box shows all the lines and relays necessary for the individual wiring diagram.

The earth/ground points are identified by "GP" and their location is shown in a vehicle diagram.

The 20-pin connectors on the central-electrics box are clipped together out of 5 parts.

Part 1, with the moduled-on fastening lug, is the "starting element".

Parts 2, 3 and 4 are "module elements".

Parts 1 to 4 are identified by the numbers 1.....5.

Part 5 is a "coding element".

The designations of the plug connections in the wiring diagram of the central-electrics box refer to the "starting element" from, for example, B 11.....15, and to the first module element from B 21.....25.

Printed in Germany – VII, 1992

LIGHTS

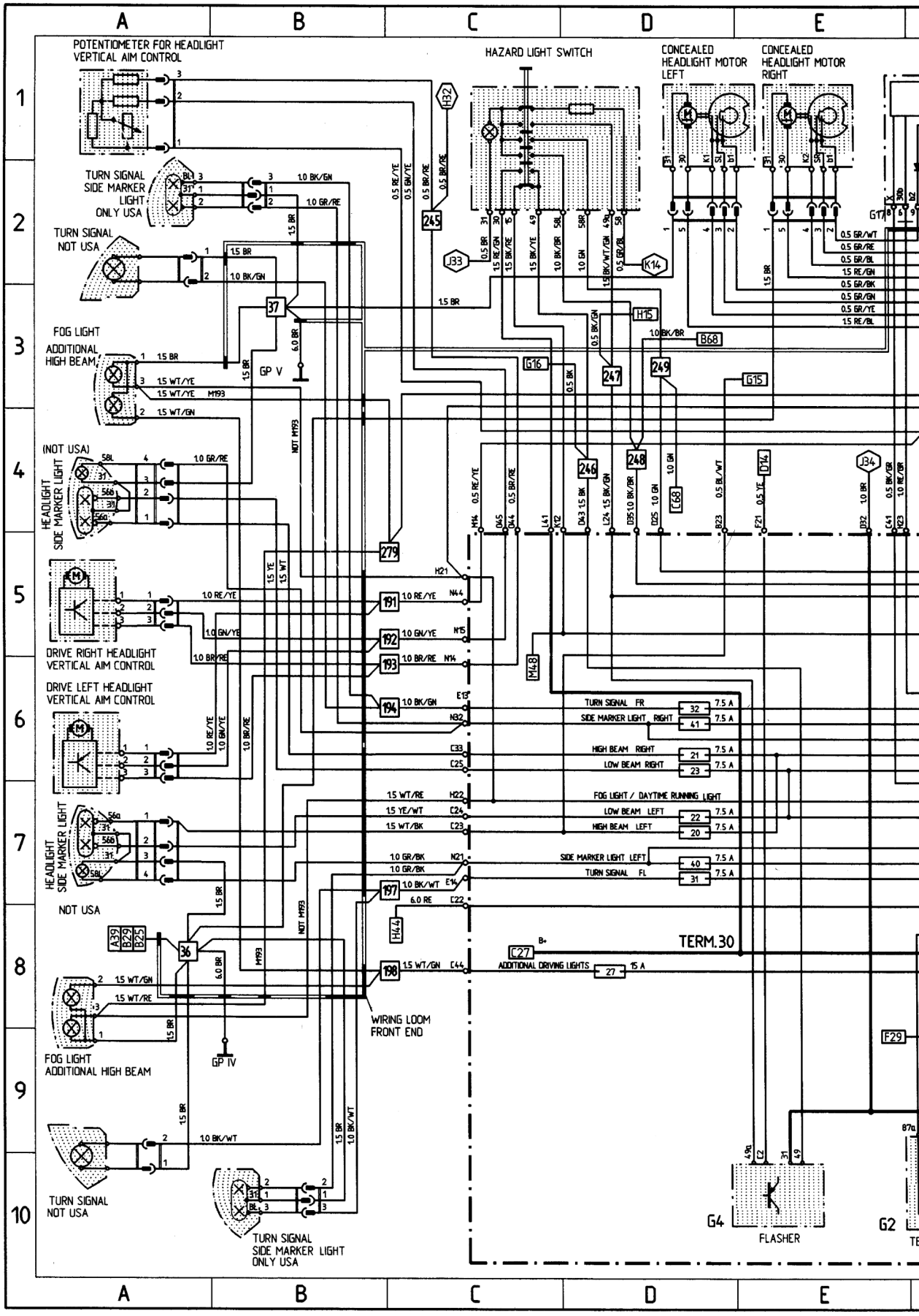
POTENTIOMETER FOR HEADLIGHT VERTICAL AIM CONTROL
HAZARD LIGHT SWITCH
CONCEALED HEADLIGHT MOTOR LEFT
CONCEALED HEADLIGHT MOTOR RIGHT
TURN SIGNAL SIDE MARKER LIGHT ONLY USA
TURN SIGNAL NOT USA
FOG LIGHT ADDITIONAL HIGH BEAM
(NOT USA)
HEADLIGHT SIDE MARKER LIGHT
DRIVE RIGHT HEADLIGHT VERTICAL AIM CONTROL
DRIVE LEFT HEADLIGHT VERTICAL AIM CONTROL
NOT USA
FOG LIGHT ADDITIONAL HIGH BEAM
TURN SIGNAL NOT USA
TURN SIGNAL SIDE MARKER LIGHT ONLY USA
WIRING LOOM FRONT END
TURN SIGNAL FR
SIDE MARKER LIGHT RIGHT
HIGH BEAM RIGHT
LOW BEAM RIGHT
FOG LIGHT / DAYTIME RUNNING LIGHT
LOW BEAM LEFT
HIGH BEAM LEFT
SIDE MARKER LIGHT LEFT
TURN SIGNAL FL
TERM.30
ADDITIONAL DRIVING LIGHTS
FLASHER
GP V
GP IV

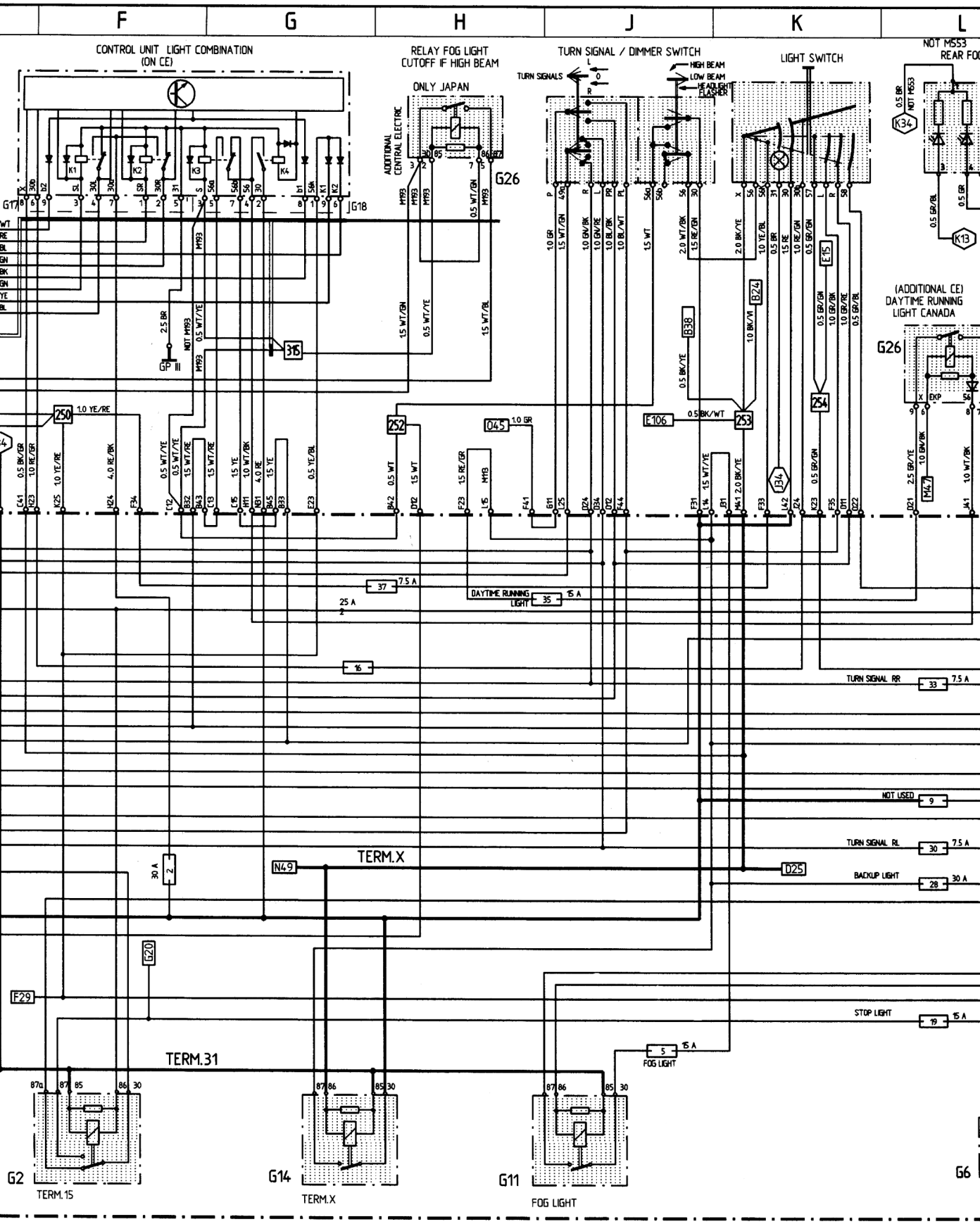

WT = WHITE YE = YELLOW RE = RED VI = VIOLET BL = BLUE GN = GREEN GR = GREY BR = BROWN BK = BLACK

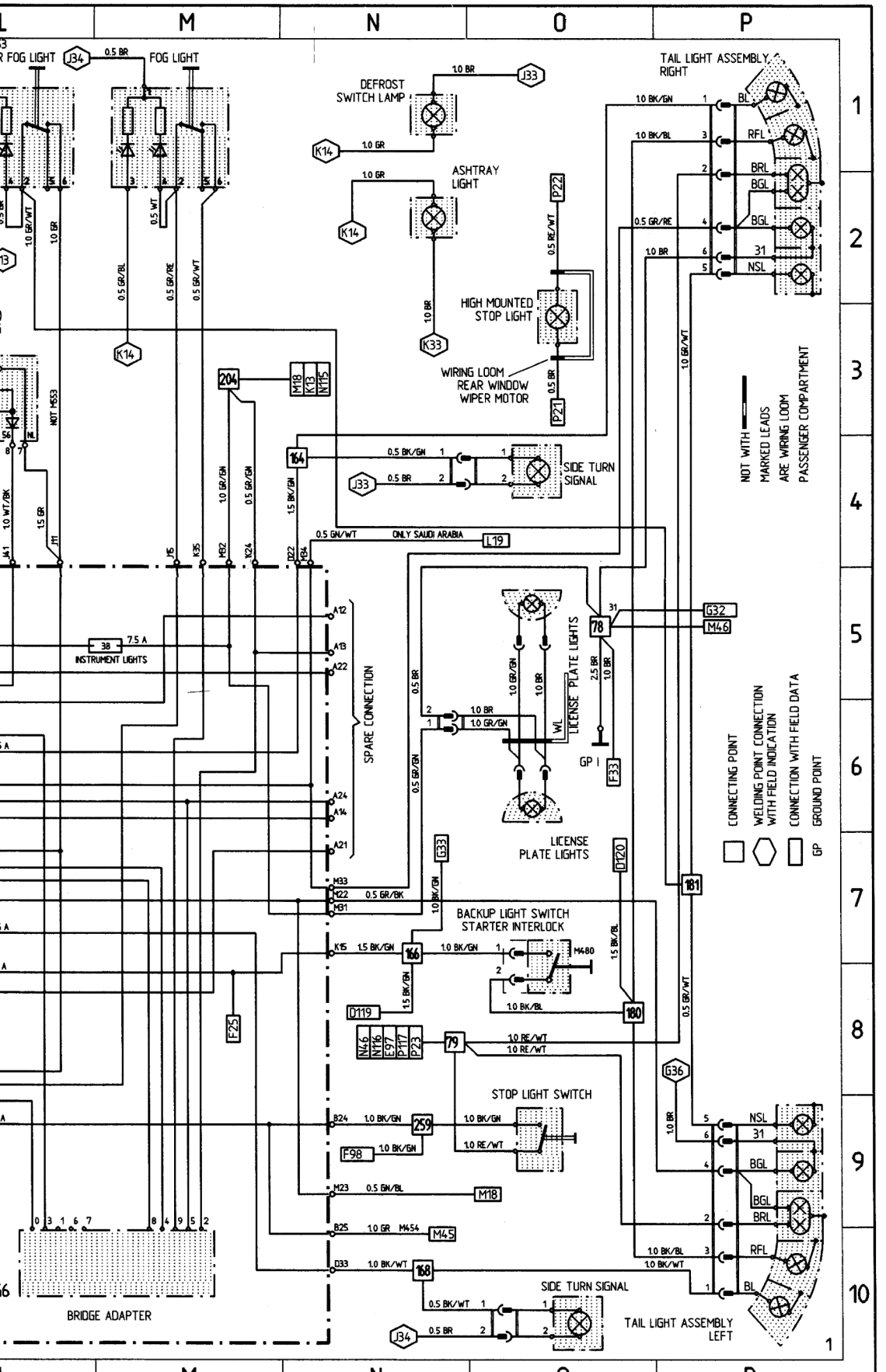
L
M
N
O
P
1
2
3
4
5
6
7
8
9
10
FOG LIGHT
J34
0.5 BR
FOG LIGHT
DEFROST SWITCH LAMP
1.0 BR
J33
K14
1.0 GR
ASHTRAY LIGHT
TAIL LIGHT ASSEMBLY, RIGHT
1.0 BK/GN
1.0 BK/BL
0.5 GR/RE
1.0 BR
BL
RFL
BRL
BGL
31
NSL
P22
0.5 RE/WT
HIGH MOUNTED STOP LIGHT
K33
WIRING LOOM REAR WINDOW WIPER MOTOR
P21
0.5 BR
1.0 GR/WT
NOT WITH MARKED LEADS ARE WIRING LOOM PASSENGER COMPARTMENT
204
M18
K13
N115
164
0.5 BK/GN
SIDE TURN SIGNAL
0.5 GN/WT
ONLY SAUDI ARABIA
L19
38
7.5 A
INSTRUMENT LIGHTS
SPARE CONNECTION
78
G32
M46
LICENSE PLATE LIGHTS
2.5 BR
WL
GP I
F33
LICENSE PLATE LIGHTS
G33
D120
181
CONNECTING POINT
WELDING POINT CONNECTION WITH FIELD INDICATION
CONNECTION WITH FIELD DATA
GP GROUND POINT
BACKUP LIGHT SWITCH STARTER INTERLOCK
K15
1.5 BK/GN
166
M480
1.5 BK/BL
180
D119
F25
N46
N116
E97
P117
P23
79
1.0 RE/WT
G36
STOP LIGHT SWITCH
B24
259
F98
M23
0.5 BN/BL
M18
B25
1.0 GR
M454
M45
D33
168
SIDE TURN SIGNAL
BRIDGE ADAPTER
TAIL LIGHT ASSEMBLY LEFT

INSTRUMENT CLUSTER AND SENSOR

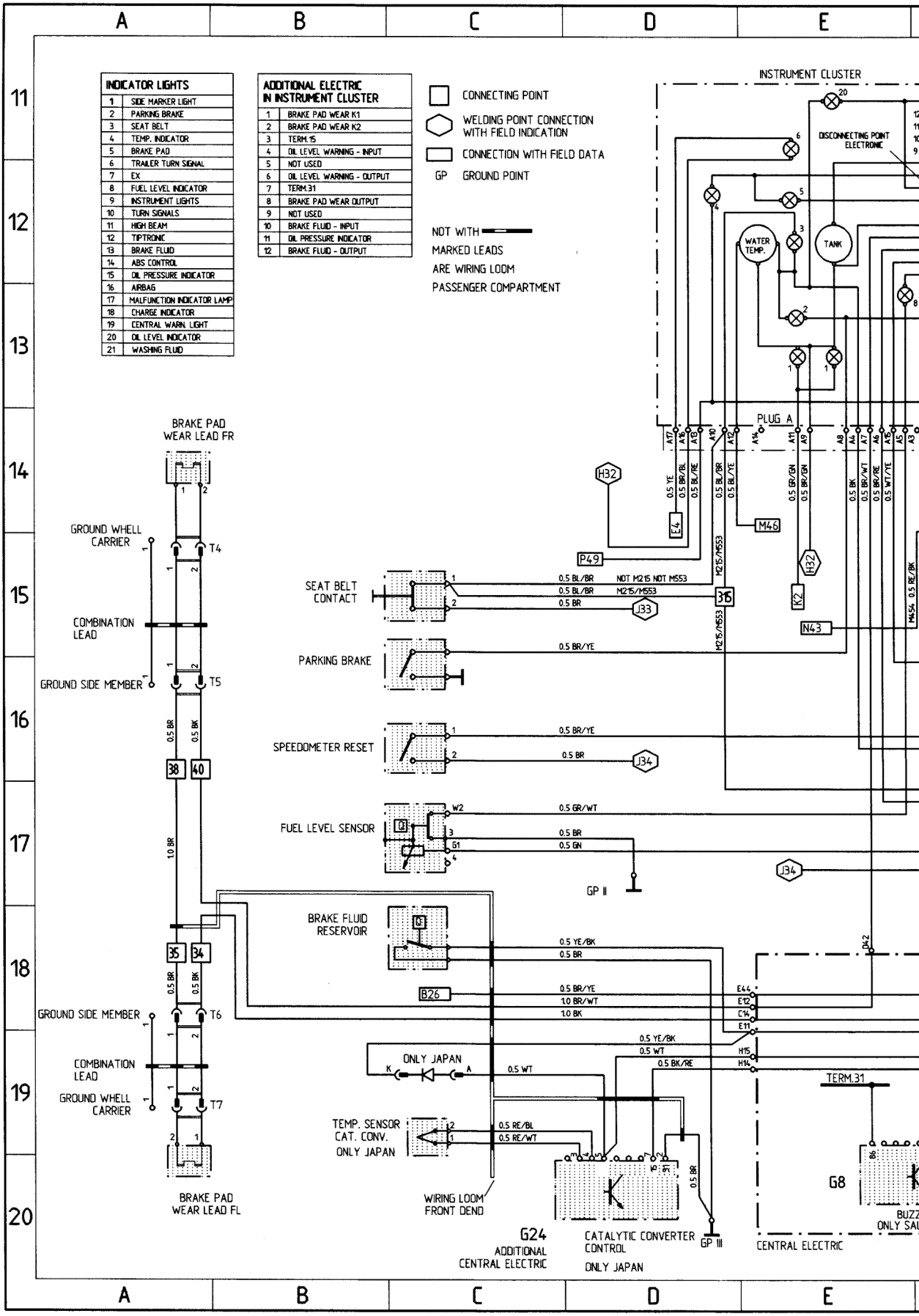

Printed in Germany - VI , 1992

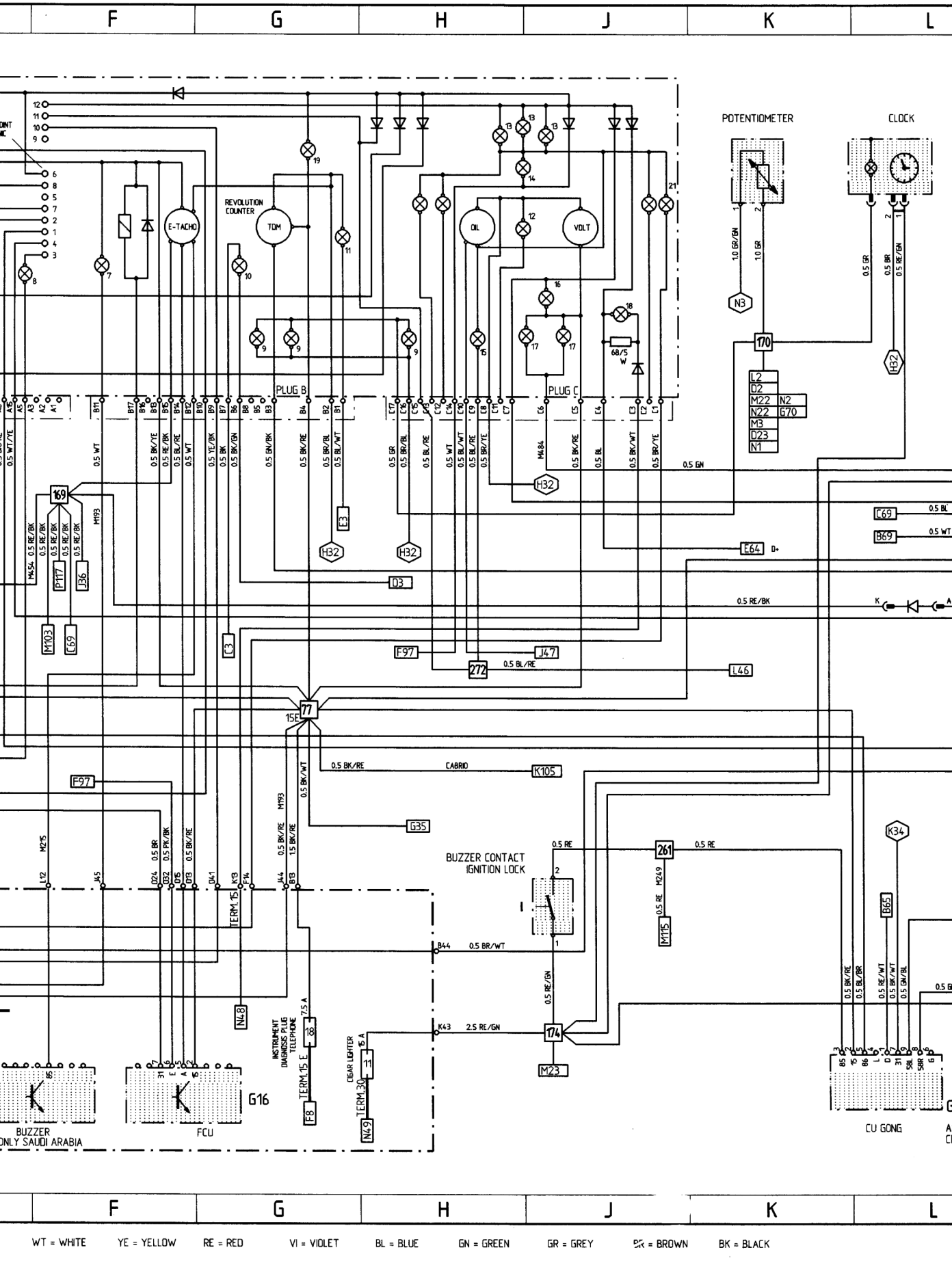
F
G
H
J
K
L
POTENTIOMETER
CLOCK
REVOLUTION COUNTER
E-TACHO
TDM
OIL
VOLT
PLUG B
PLUG C
BUZZER CONTACT IGNITION LOCK
CABRIO
BUZZER ONLY SAUDI ARABIA
FCU
CU GONG
INSTRUMENT DIAGNOSIS PLUG TELEPHONE
CIGAR LIGHTER
TERM.15
TERM.30
WT = WHITE
YE = YELLOW
RE = RED
VI = VIOLET
BL = BLUE
GN = GREEN
GR = GREY
BR = BROWN
BK = BLACK

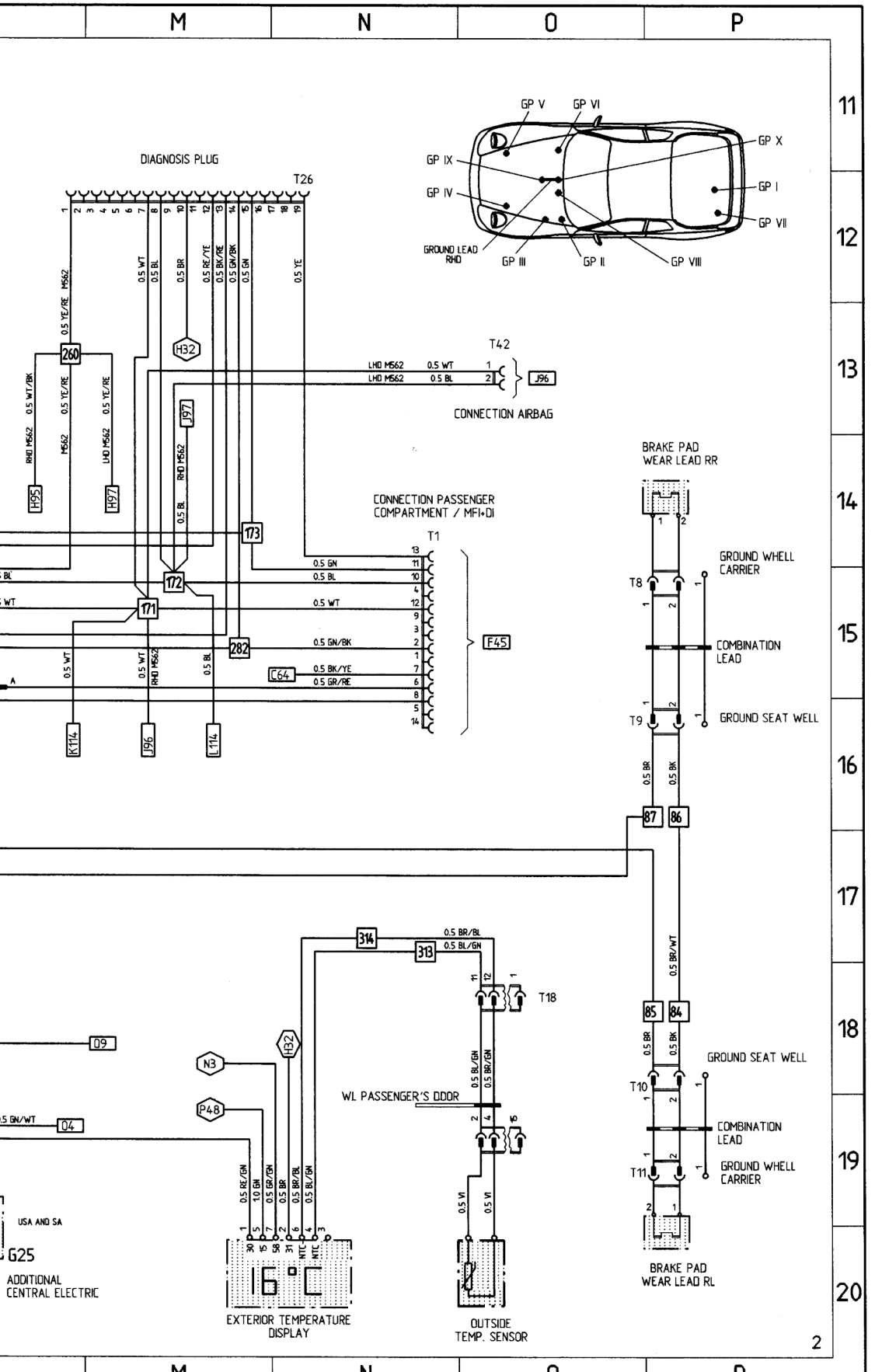
M
N
O
P
11
12
13
14
15
16
17
18
19
20
DIAGNOSIS PLUG
T26
GP V
GP VI
GP X
GP IX
GP I
GP IV
GP VII
GROUND LEAD RHD
GP III
GP II
GP VIII
T42
CONNECTION AIRBAG
LHD M562
0.5 WT
0.5 BL
J96
J97
H32
260
H95
H97
CONNECTION PASSENGER COMPARTMENT / MFI+DI
T1
F45
173
172
171
282
C64
K114
L114
BRAKE PAD WEAR LEAD RR
GROUND WHELL CARRIER
T8
COMBINATION LEAD
T9
GROUND SEAT WELL
87
86
85
84
T10
T11
BRAKE PAD WEAR LEAD RL
314
313
T18
WL PASSENGER'S DOOR
N3
P48
09
04
USA AND SA
G25
ADDITIONAL CENTRAL ELECTRIC
EXTERIOR TEMPERATURE DISPLAY
OUTSIDE TEMP. SENSOR
2

968 MODEL 93 SHEET 3

HEATING, AIR CONDITIONING, VENTILATING, POWER SEATS, WIPE- AND WASH CLEANERS

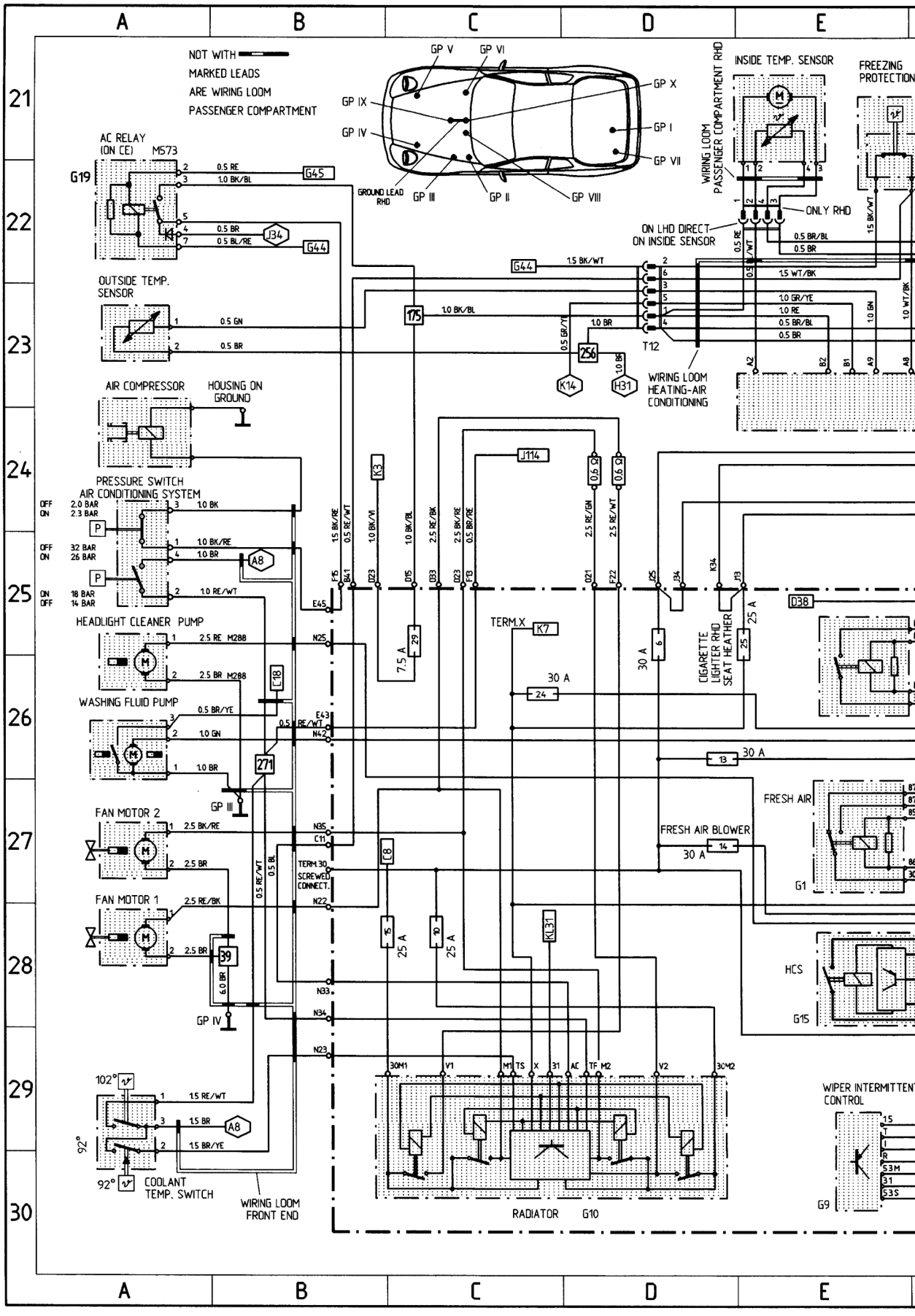

Printed in Germany - VI , 1992

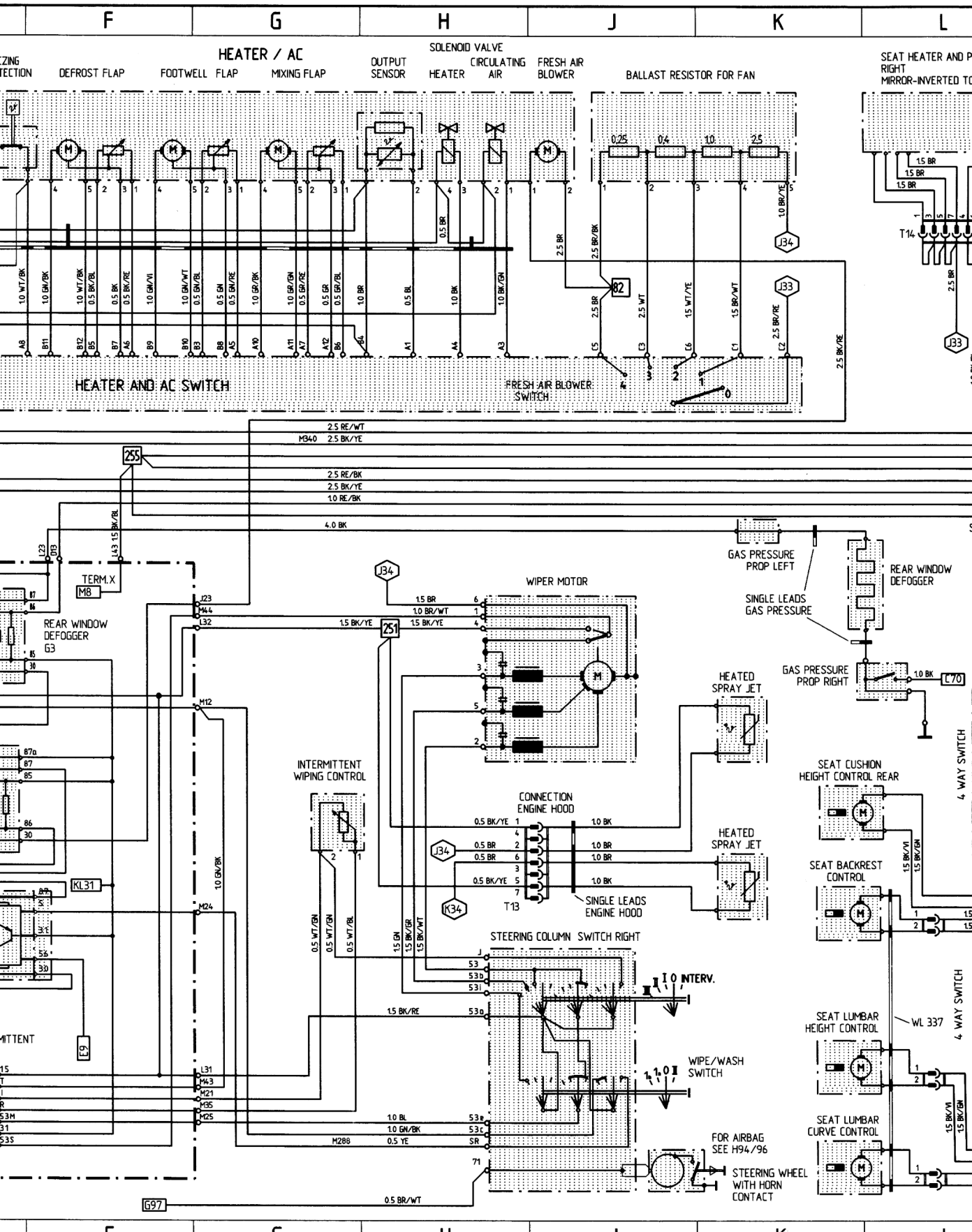
F
G
H
J
K
L
HEATER / AC
DEFROST FLAP
FOOTWELL FLAP
MIXING FLAP
OUTPUT SENSOR
SOLENOID VALVE HEATER
CIRCULATING AIR
FRESH AIR BLOWER
BALLAST RESISTOR FOR FAN
HEATER AND AC SWITCH
FRESH AIR BLOWER SWITCH
SEAT HEATER AND P
RIGHT
MIRROR-INVERTED TO
T14
J33
J34
B2
2.5 RE/WT
M340 2.5 BK/YE
255
2.5 RE/BK
2.5 BK/YE
1.0 RE/BK
4.0 BK
TERM.X
M8
REAR WINDOW DEFOGGER
G3
WIPER MOTOR
251
GAS PRESSURE PROP LEFT
SINGLE LEADS GAS PRESSURE
REAR WINDOW DEFOGGER
GAS PRESSURE PROP RIGHT
C70
HEATED SPRAY JET
HEATED SPRAY JET
INTERMITTENT WIPING CONTROL
CONNECTION ENGINE HOOD
T13
K34
SINGLE LEADS ENGINE HOOD
SEAT CUSHION HEIGHT CONTROL REAR
4 WAY SWITCH
SEAT BACKREST CONTROL
STEERING COLUMN SWITCH RIGHT
I0 INTERV.
WIPE/WASH SWITCH
SEAT LUMBAR HEIGHT CONTROL
WL 337
4 WAY SWITCH
SEAT LUMBAR CURVE CONTROL
FOR AIRBAG SEE H94/96
STEERING WHEEL WITH HORN CONTACT
G97
KL31
E9
WT = WHITE
YE = YELLOW
RE = RED
VI = VIOLET
BL = BLUE
GN = GREEN
GR = GREY
BR = BROWN
BK = BLACK

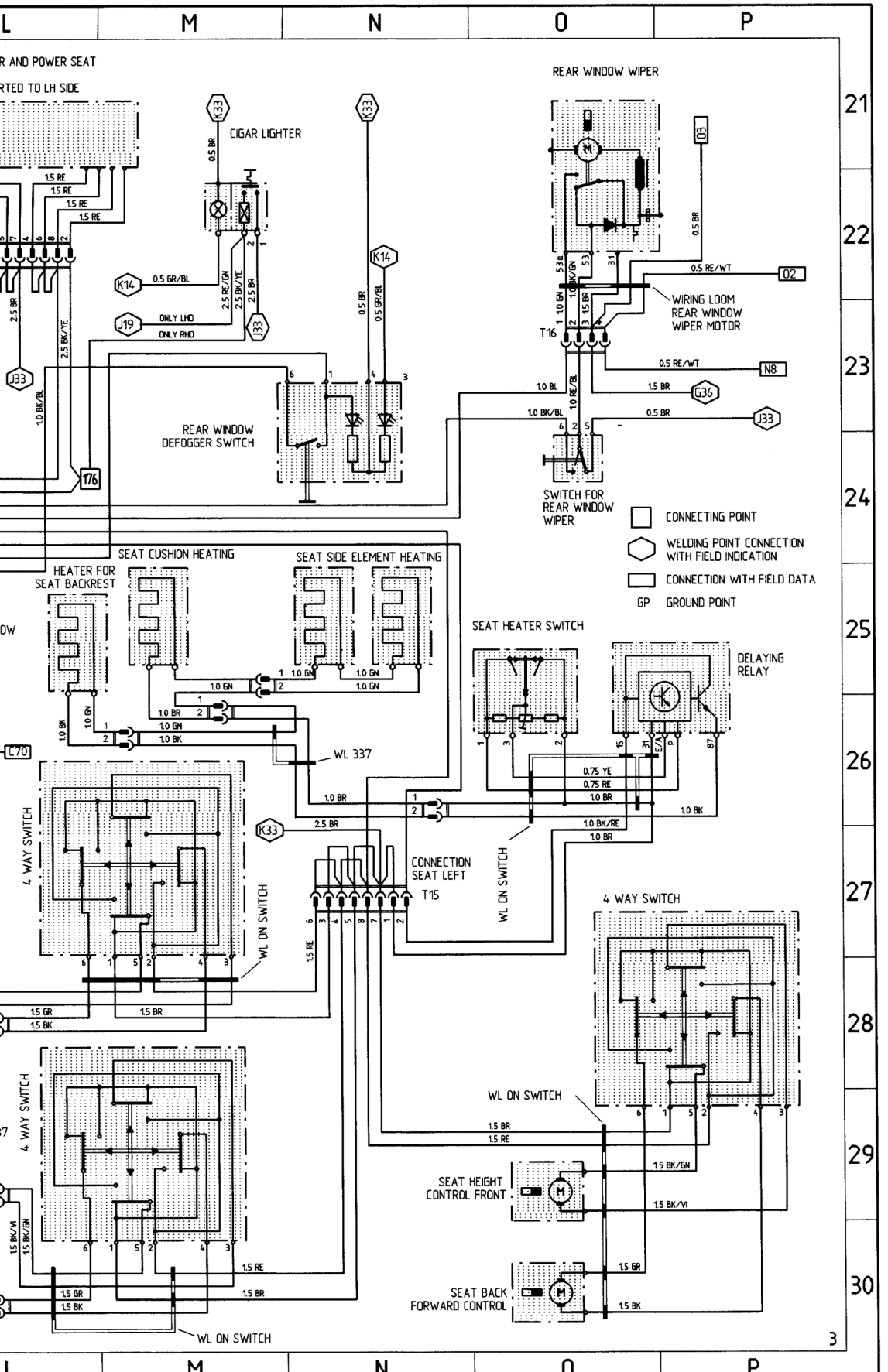
L
M
N
O
P
R AND POWER SEAT
RTED TO LH SIDE
CIGAR LIGHTER
REAR WINDOW WIPER
WIRING LOOM REAR WINDOW WIPER MOTOR
REAR WINDOW DEFOGGER SWITCH
SWITCH FOR REAR WINDOW WIPER
CONNECTING POINT
WELDING POINT CONNECTION WITH FIELD INDICATION
CONNECTION WITH FIELD DATA
GP GROUND POINT
SEAT CUSHION HEATING
SEAT SIDE ELEMENT HEATING
HEATER FOR SEAT BACKREST
SEAT HEATER SWITCH
DELAYING RELAY
WL 337
4 WAY SWITCH
WL ON SWITCH
CONNECTION SEAT LEFT
T15
SEAT HEIGHT CONTROL FRONT
SEAT BACK FORWARD CONTROL
ONLY LHD
ONLY RHD
21
22
23
24
25
26
27
28
29
30
3

968 MODEL 93 SHEET 4

TWO-TONE HORNS, MIRRORS, LIFTING ROOF, POWER WINDOW REGULATOR, TAILGATE UNLOCKING

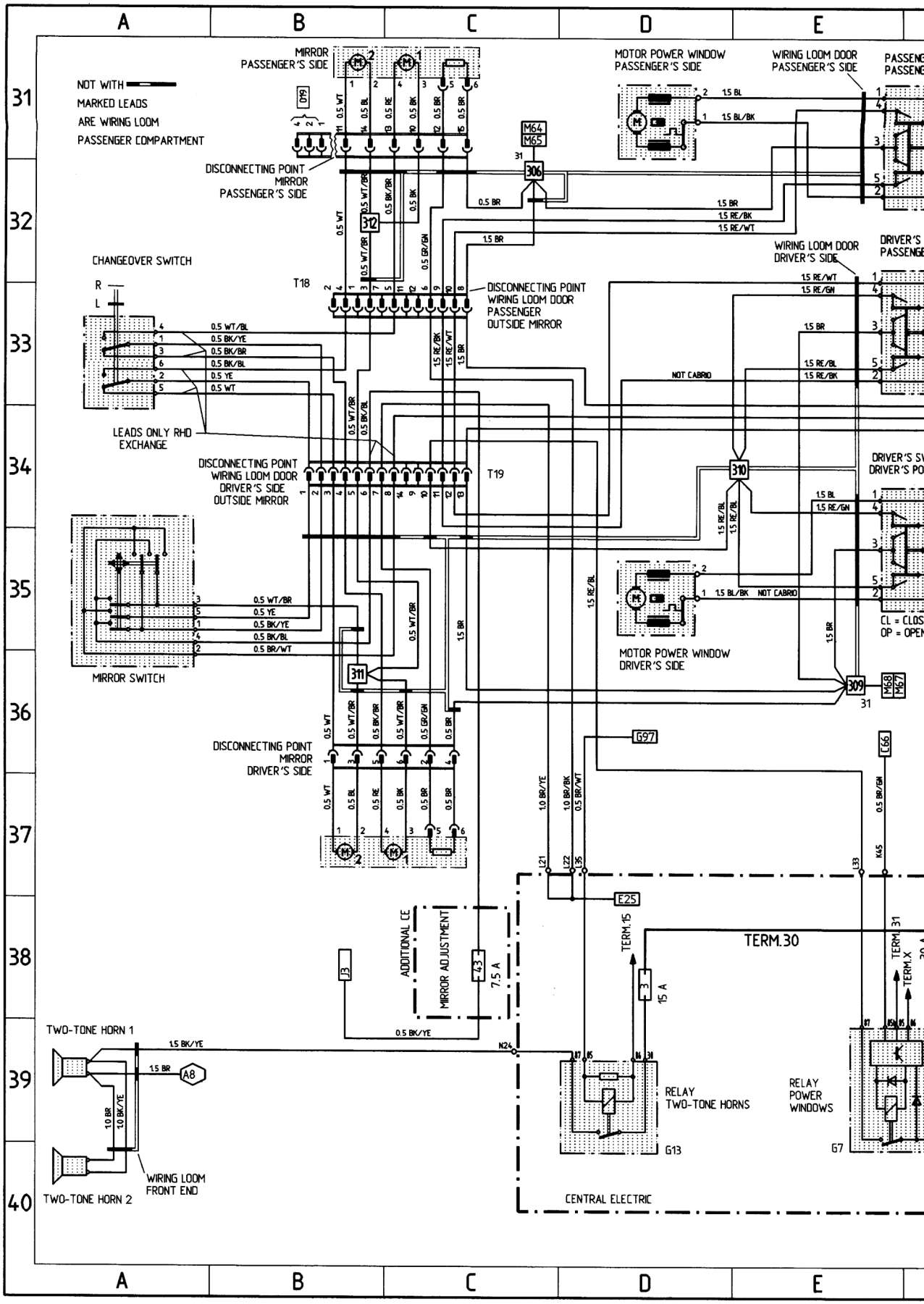

NLOCKING

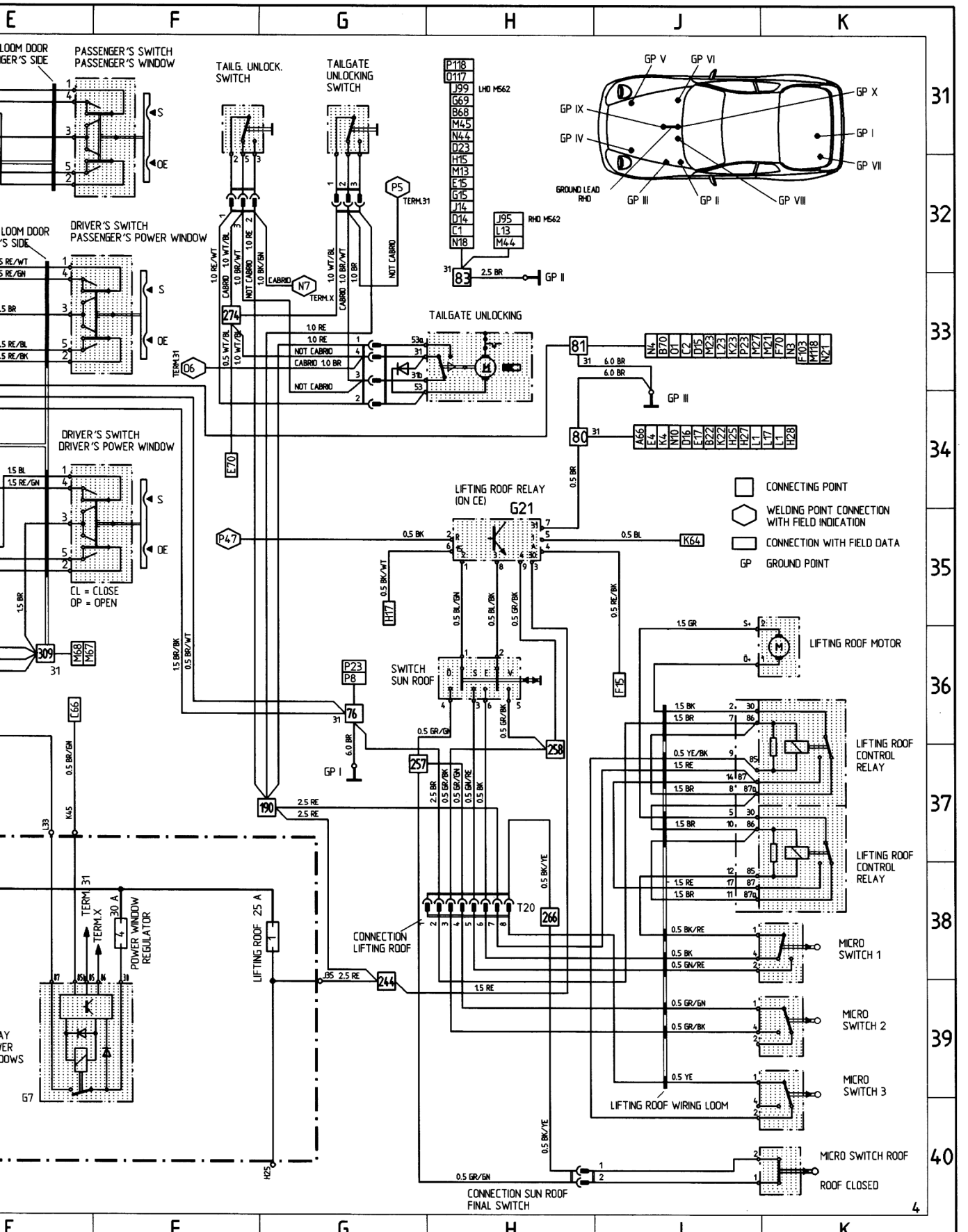

WT = WHITE YE = YELLOW RE = RED VI = VIOLET BL = BLUE
GN = GREEN GR = GREY BR = BROWN BK = BLACK

968 MODEL 93 SHEET 5

ENGINE COMPARTMENT, CRUISE CONTROL

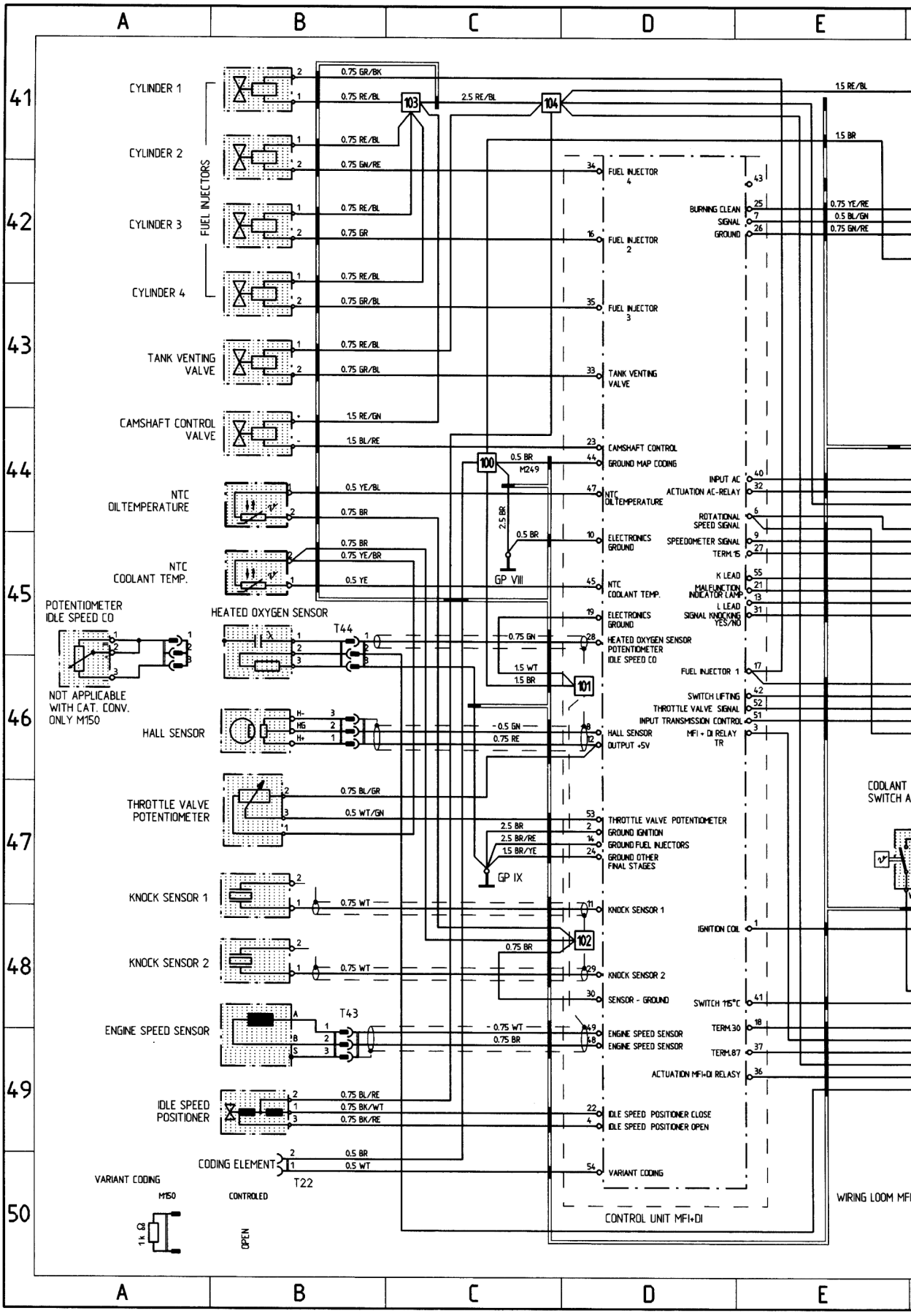

Printed in Germany - VI , 1992

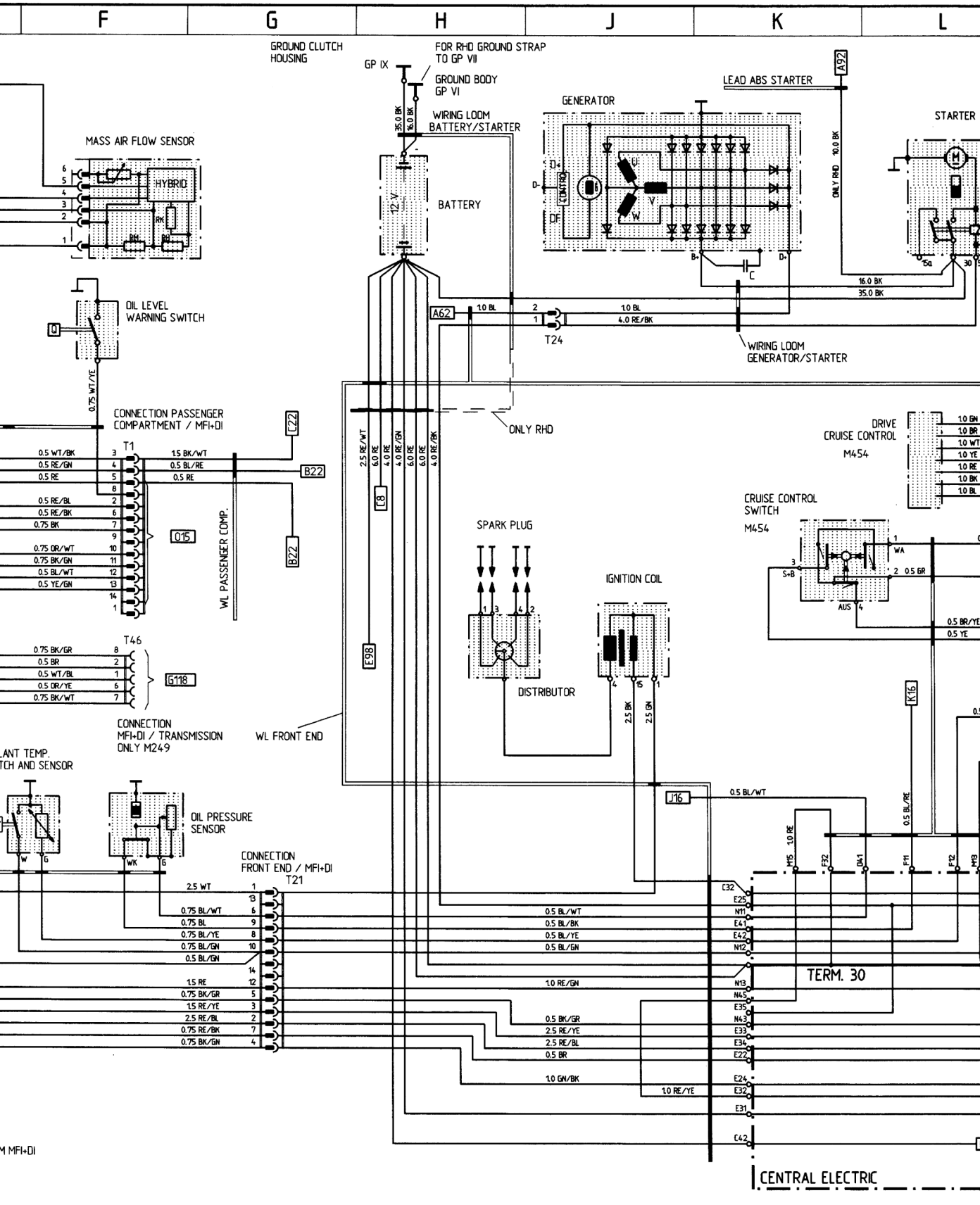

WT = WHITE YE = YELLOW RE = RED VI = VIOLET BL = BLUE GN = GREEN GR = GREY BR = BROWN BK = BLACK

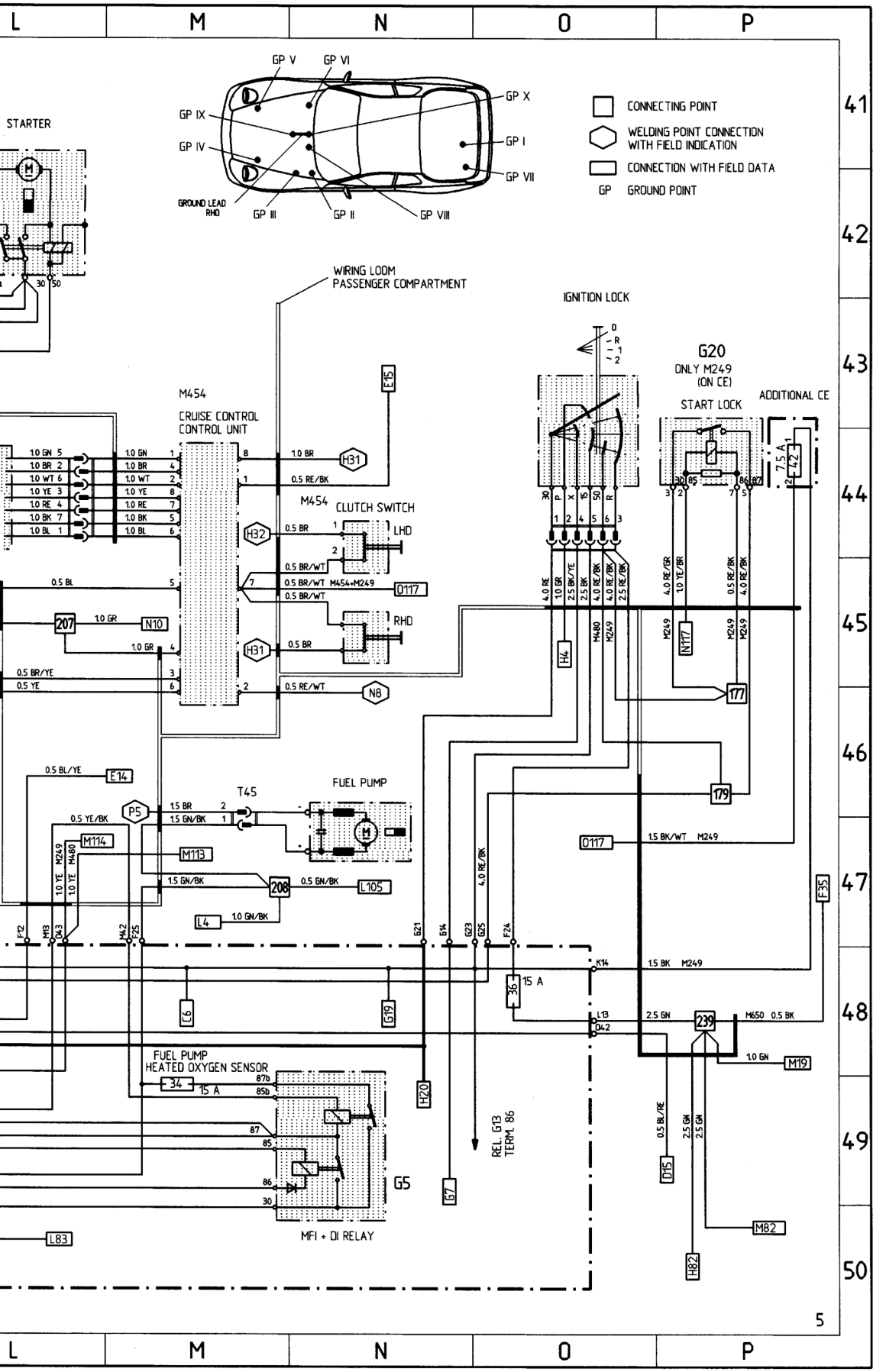
L
M
N
O
P
41
42
43
44
45
46
47
48
49
50
STARTER
GP V
GP VI
GP IX
GP IV
GP X
GP I
GP VII
GP III
GP II
GP VIII
GROUND LEAD RHD
CONNECTING POINT
WELDING POINT CONNECTION WITH FIELD INDICATION
CONNECTION WITH FIELD DATA
GP GROUND POINT
WIRING LOOM PASSENGER COMPARTMENT
IGNITION LOCK
G20
ONLY M249 (ON CE)
START LOCK
ADDITIONAL CE
M454
CRUISE CONTROL CONTROL UNIT
M454
CLUTCH SWITCH
LHD
RHD
FUEL PUMP
T45
FUEL PUMP HEATED OXYGEN SENSOR
G5
MFI + DI RELAY
REL. G13 TERM. 86
5

CENTRAL ELECTRIC

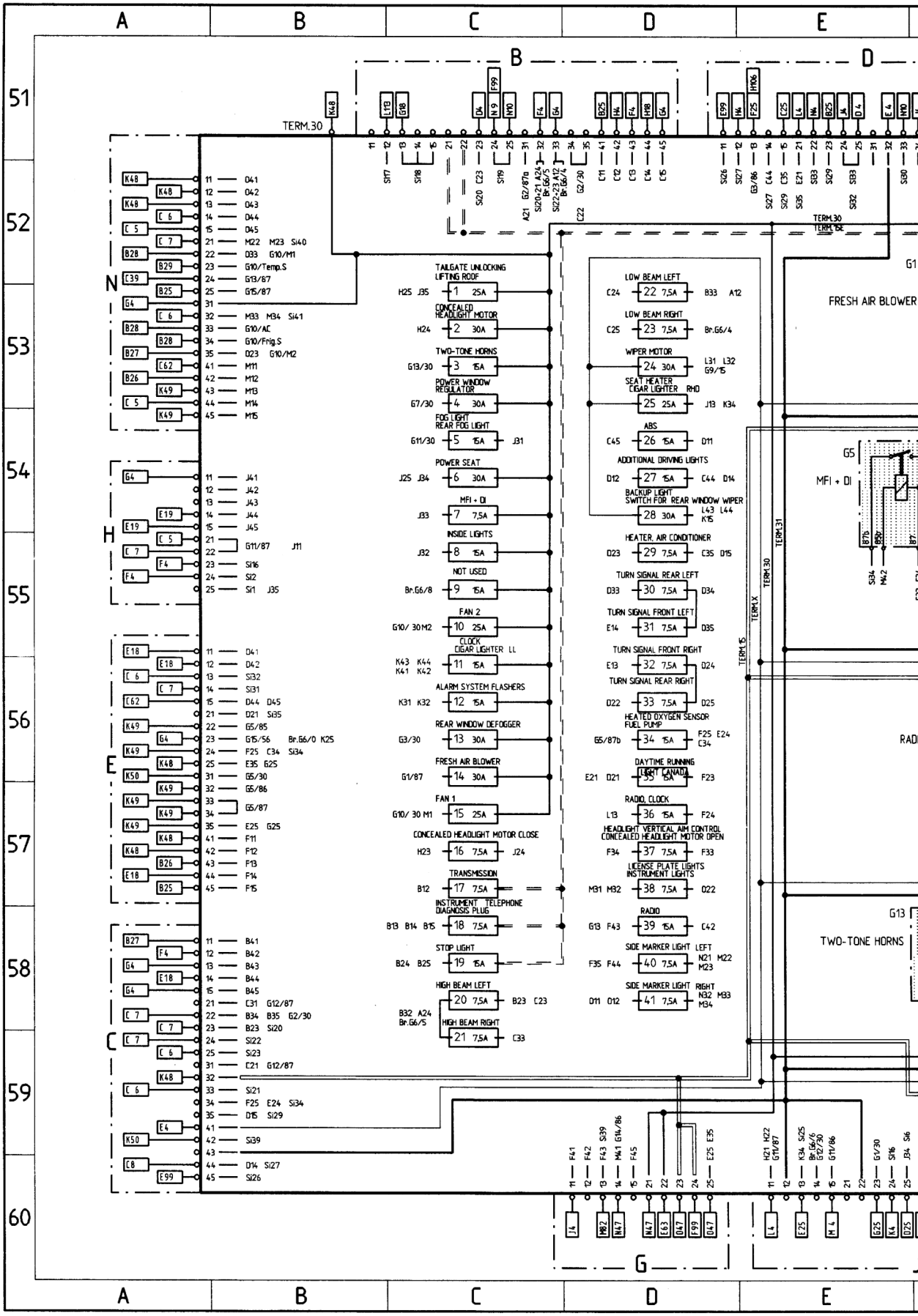

Printed in Germany - VI , 1992

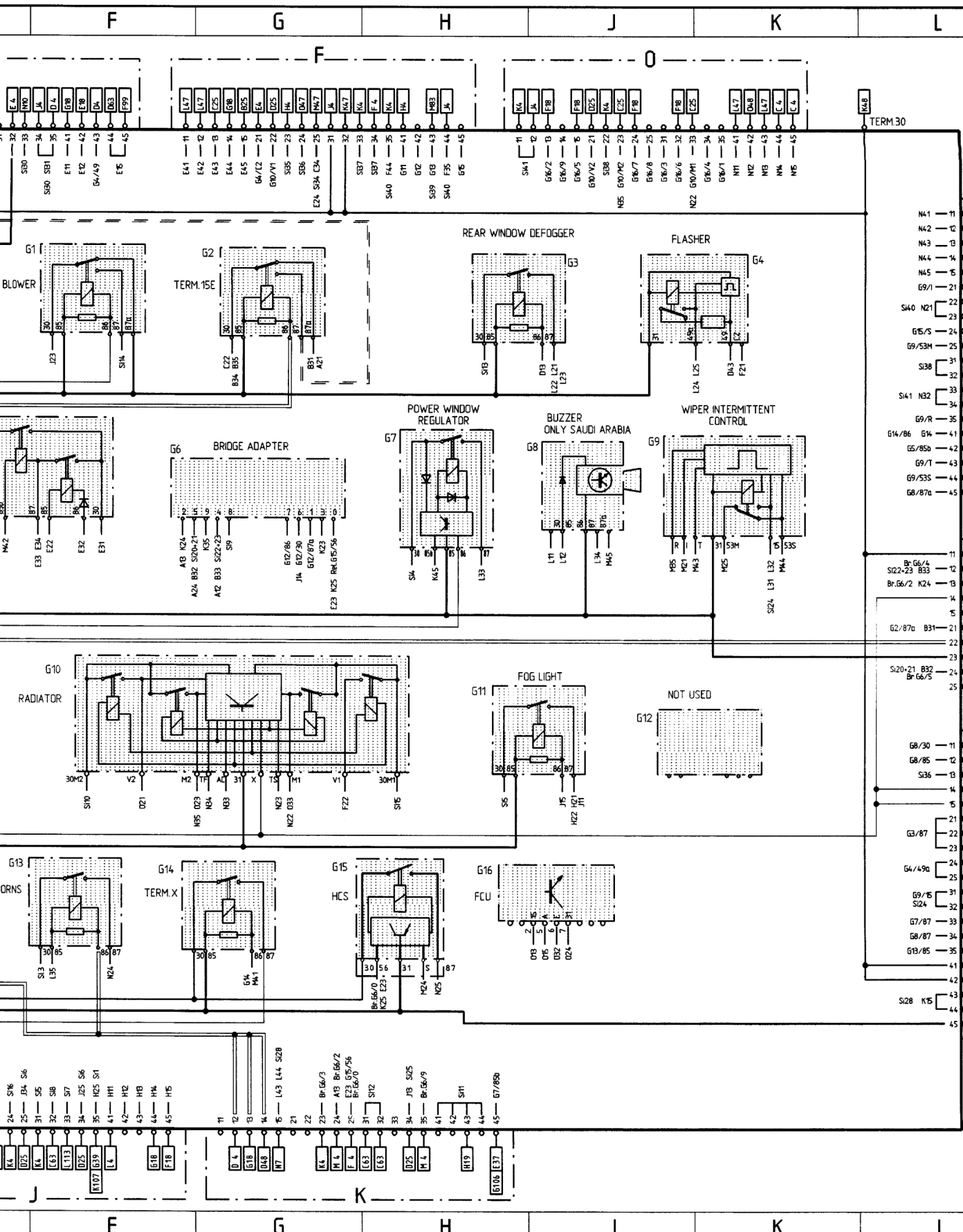
F
G
H
J
K
L
TERM.30
G1
BLOWER
G2
TERM.15E
REAR WINDOW DEFOGGER
G3
FLASHER
G4
G6
BRIDGE ADAPTER
POWER WINDOW REGULATOR
G7
BUZZER ONLY SAUDI ARABIA
G8
WIPER INTERMITTENT CONTROL
G9
G10
RADIATOR
FOG LIGHT
G11
NOT USED
G12
G13
G14
TERM.X
G15
HCS
G16
FCU

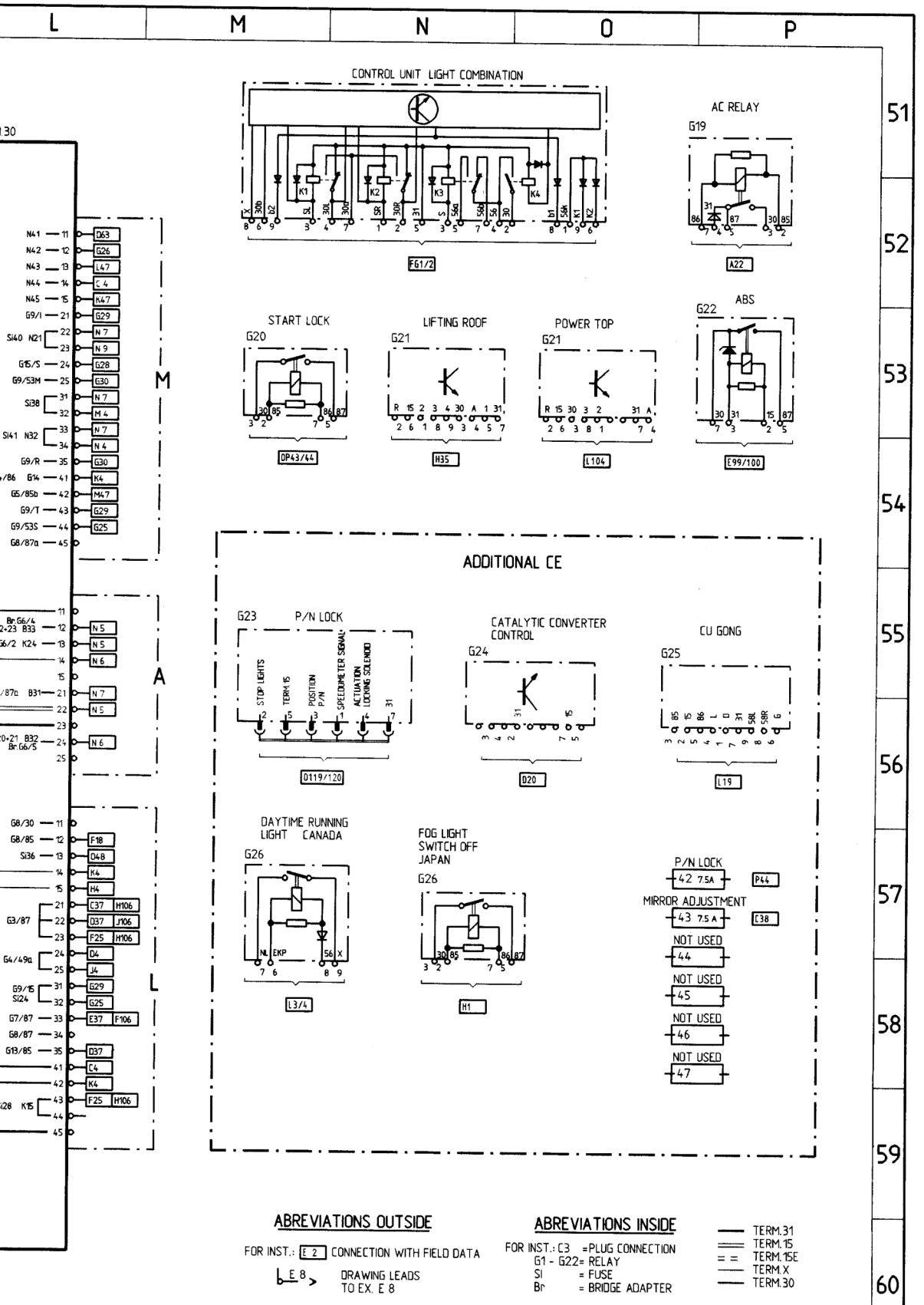
L
M
N
O
P
51
52
53
54
55
56
57
58
59
60
CONTROL UNIT LIGHT COMBINATION
FG1/2
AC RELAY
G19
A22
START LOCK
G20
OP43/44
LIFTING ROOF
G21
H35
POWER TOP
G21
L104
ABS
G22
E99/100
ADDITIONAL CE
G23 P/N LOCK
STOP LIGHTS
TERM 15
POSITION P/N
SPEEDOMETER SIGNAL
ACTUATION LOCKING SOLENOID
D119/120
CATALYTIC CONVERTER CONTROL
G24
D20
CU GONG
G25
L19
DAYTIME RUNNING LIGHT CANADA
G26
L3/4
FOG LIGHT SWITCH OFF JAPAN
G26
H1
P/N LOCK
42 7.5A
P44
MIRROR ADJUSTMENT
43 7.5 A
E38
NOT USED
44
NOT USED
45
NOT USED
46
NOT USED
47
N41 11 D63
N42 12 G26
N43 13 L47
N44 14 C 4
N45 15 K47
G9/1 21 G29
SI40 N21 22 N 7
23 N 9
G15/S 24 G28
G9/53M 25 G30
SI38 31 N 7
32 M 4
SI41 N32 33 N 7
34 N 4
G9/R 35 G30
G14 41 K4
G5/85b 42 M47
G9/T 43 G29
G9/53S 44 G25
G8/87a 45
11
N 5
N 5
N 6
N 7
N 5
N 6
G8/30 11
G8/85 12 F18
SI36 13 D48
K4
H4
C37 H106
G3/87 D37 J106
F25 H106
G4/49a D4
J4
G9/15 G29
SI24 G25
G7/87 33 E37 F106
G8/87 34
G13/85 35 D37
41 C4
42 K4
K15 F25 H106
ABREVIATIONS OUTSIDE
FOR INST.: E 2 CONNECTION WITH FIELD DATA
E 8 DRAWING LEADS TO EX. E 8
ABREVIATIONS INSIDE
FOR INST.: C3 =PLUG CONNECTION
G1 - G22= RELAY
SI = FUSE
Br = BRIDGE ADAPTER
TERM.31
TERM.15
TERM.15E
TERM.X
TERM.30
6

968 MODEL 93 SHEET 7

CENTRAL LOCKS, ALARM SYSTEM

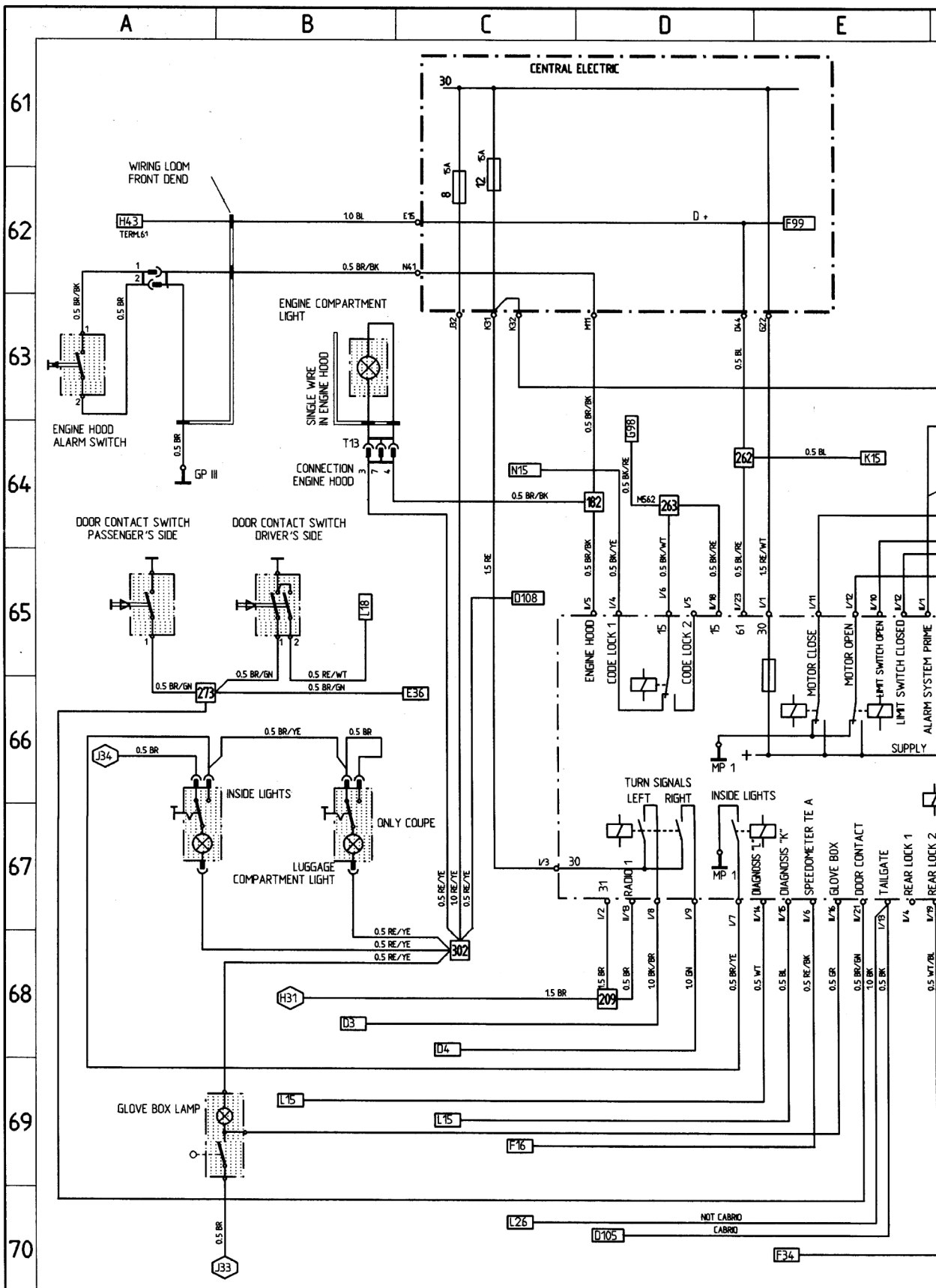

Printed in Germany - VI . 1992

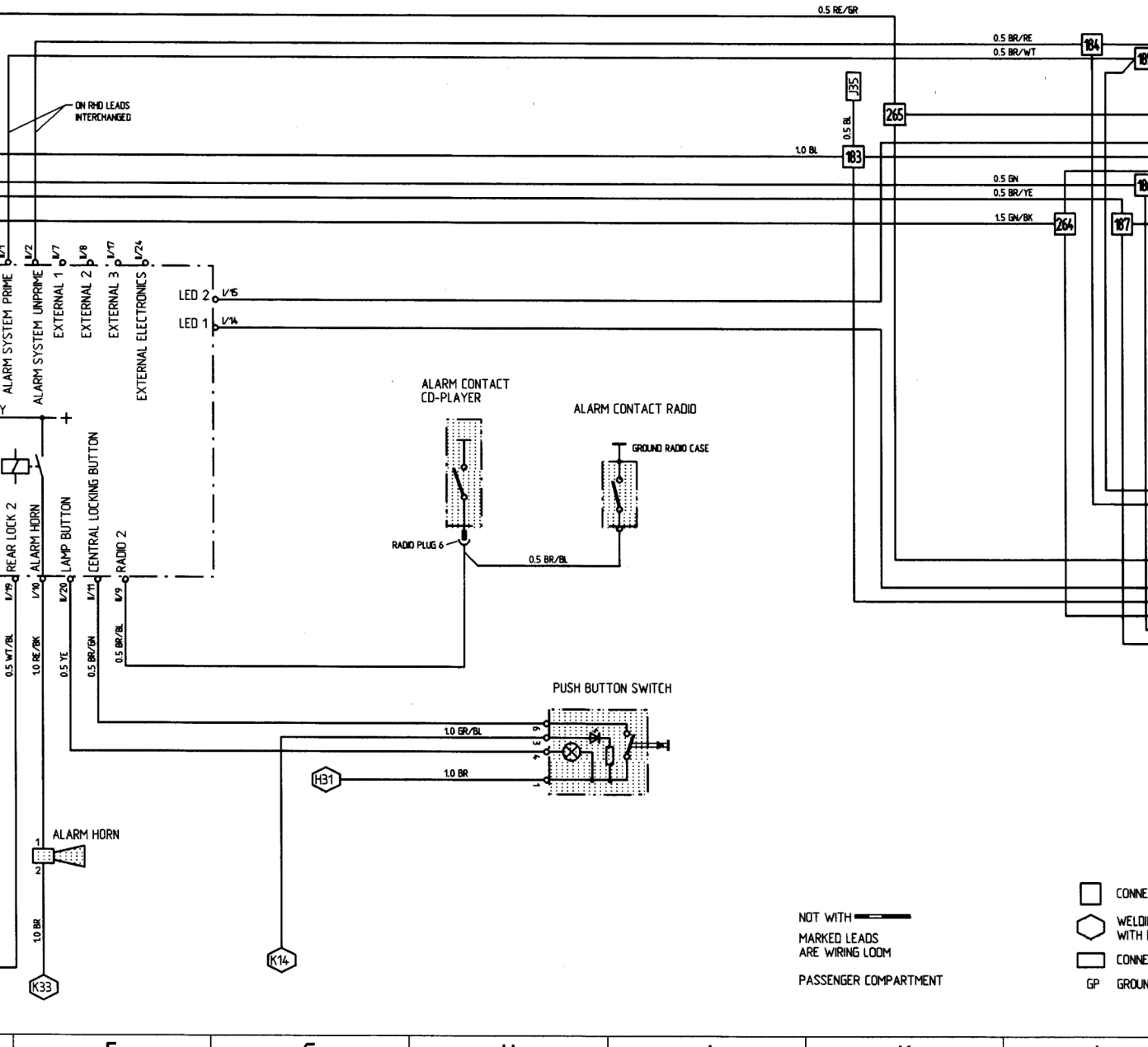

WT = WHITE YE = YELLOW RE = RED VI = VIOLET BL = BLUE GN = GREEN GR = GREY BR = BROWN BK = BLACK

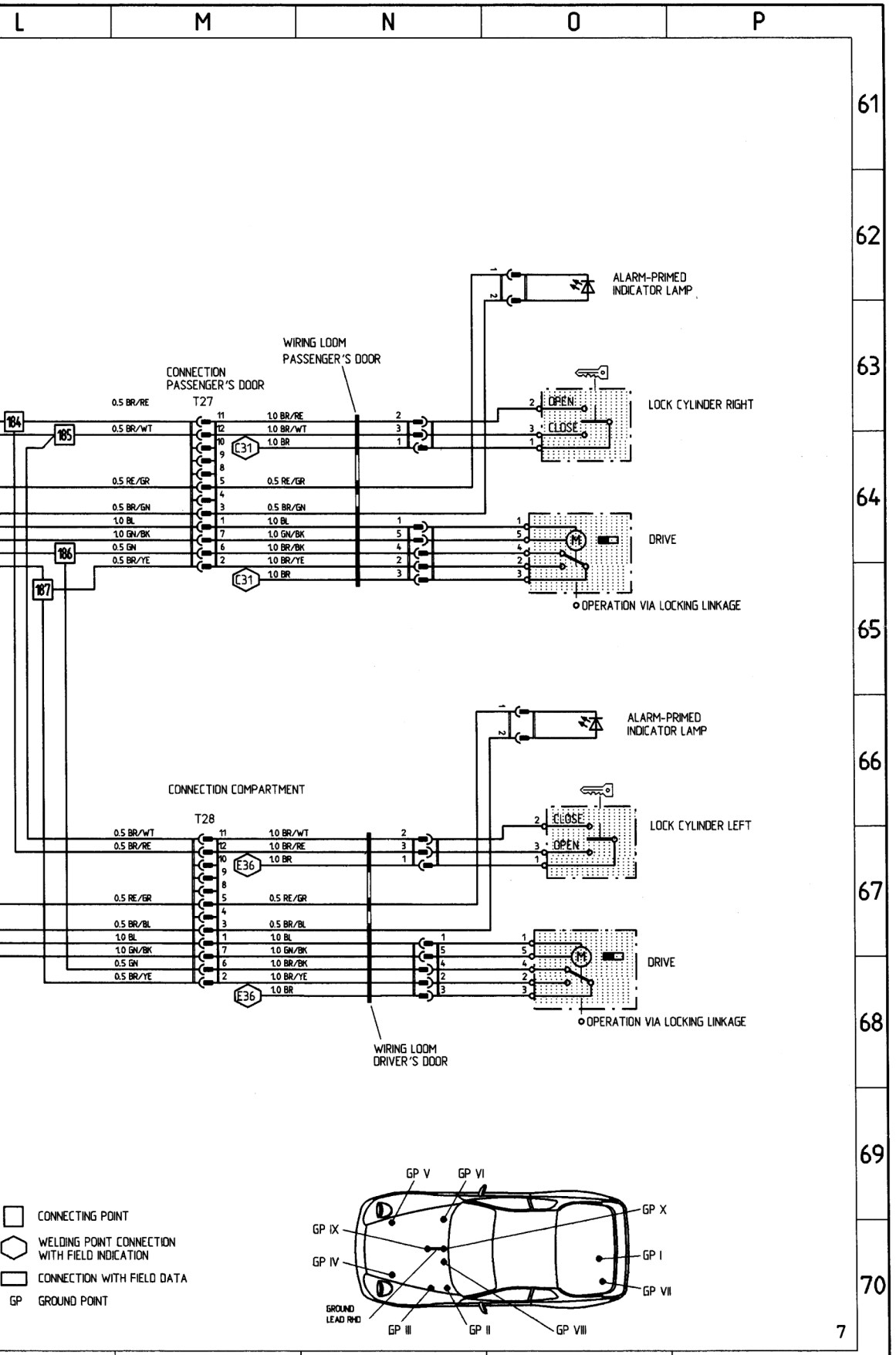
L
M
N
O
P
61
62
63
64
65
66
67
68
69
70
ALARM-PRIMED INDICATOR LAMP
WIRING LOOM PASSENGER'S DOOR
CONNECTION PASSENGER'S DOOR
T27
0.5 BR/RE
0.5 BR/WT
0.5 RE/GR
0.5 BR/GN
1.0 BL
1.0 GN/BK
0.5 GN
0.5 BR/YE
1.0 BR/RE
1.0 BR/WT
1.0 BR
0.5 RE/GR
0.5 BR/GN
1.0 BL
1.0 GN/BK
1.0 BR/BK
1.0 BR/YE
C31
184
185
186
187
OPEN
CLOSE
LOCK CYLINDER RIGHT
DRIVE
OPERATION VIA LOCKING LINKAGE
ALARM-PRIMED INDICATOR LAMP
CONNECTION COMPARTMENT
T28
0.5 BR/WT
0.5 BR/RE
0.5 RE/GR
0.5 BR/BL
1.0 BL
1.0 GN/BK
0.5 GN
0.5 BR/YE
1.0 BR/WT
1.0 BR/RE
1.0 BR
0.5 RE/GR
0.5 BR/BL
1.0 BL
1.0 GN/BK
1.0 BR/BK
1.0 BR/YE
E36
CLOSE
OPEN
LOCK CYLINDER LEFT
DRIVE
OPERATION VIA LOCKING LINKAGE
WIRING LOOM DRIVER'S DOOR
CONNECTING POINT
WELDING POINT CONNECTION WITH FIELD INDICATION
CONNECTION WITH FIELD DATA
GP GROUND POINT
GP V
GP VI
GP IX
GP X
GP IV
GP I
GP VII
GROUND LEAD RHD
GP III
GP II
GP VIII
7

FOG LIGHT, REAR FOG LIGHT

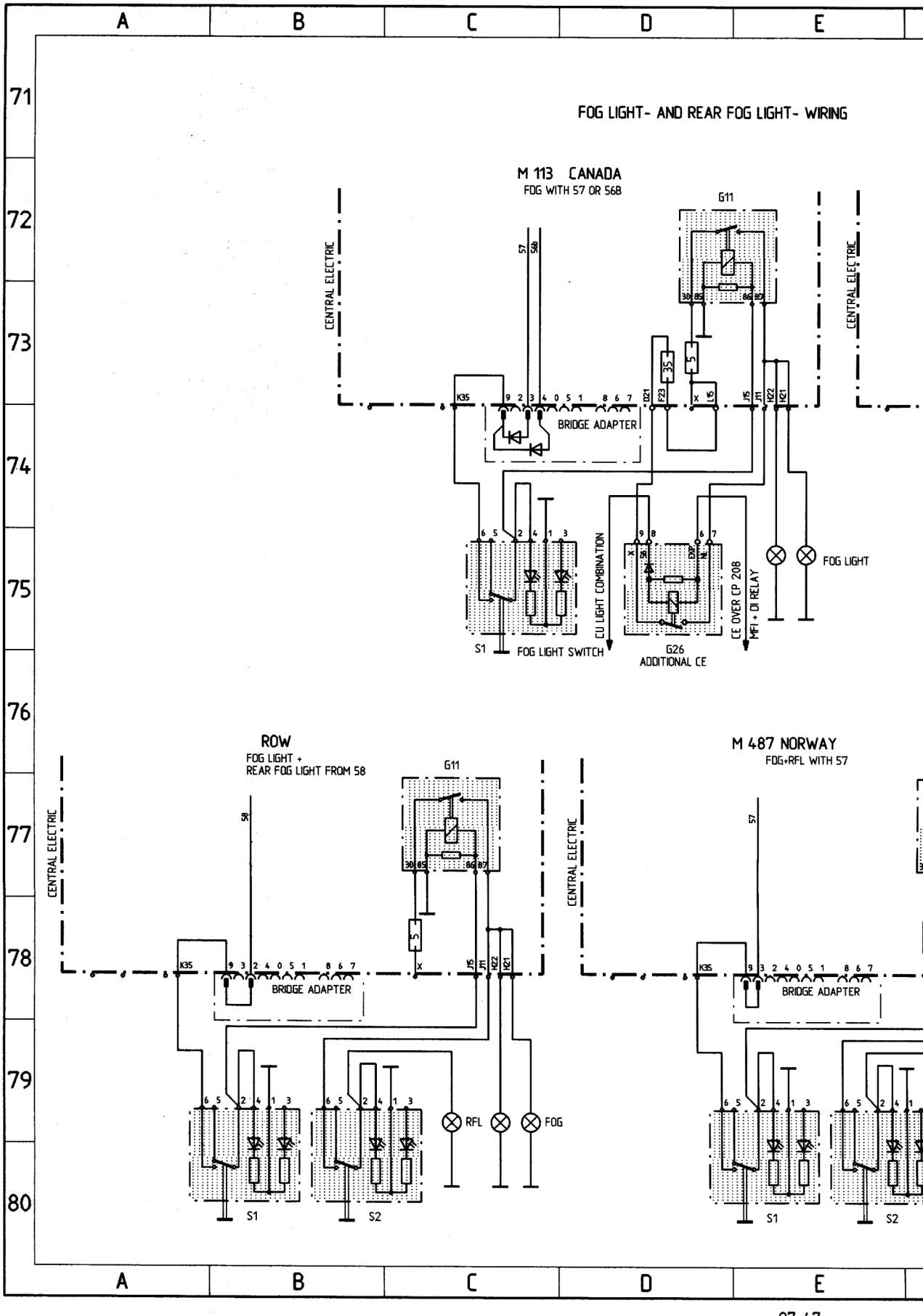

Printed in Germany - VI , 1992

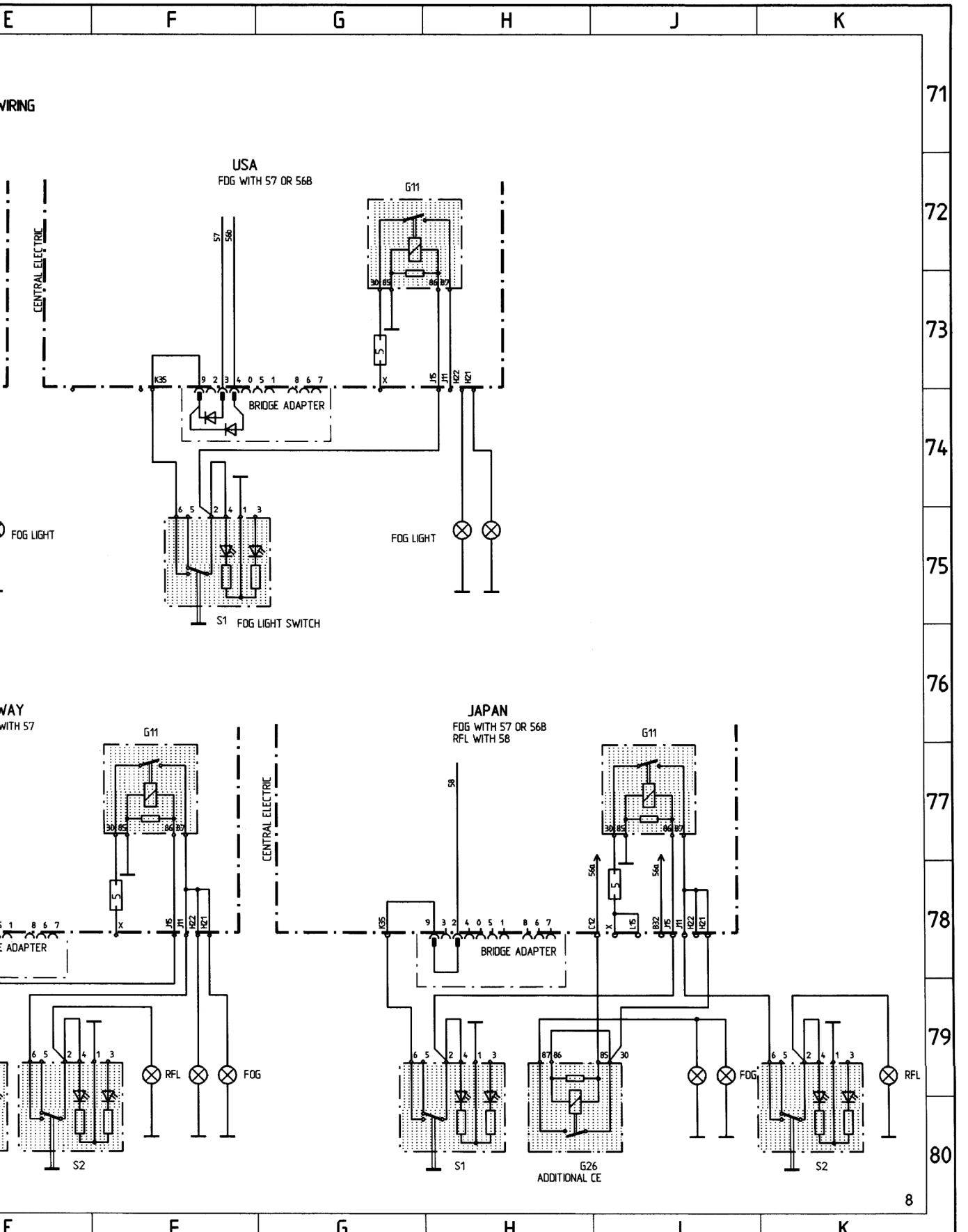
E
F
G
H
J
K
71
72
73
74
75
76
77
78
79
80
WIRING
USA
FOG WITH 57 OR 56B
CENTRAL ELECTRIC
G11
57
56b
30 85 86 87
S
X
K35
9 2 3 4 0 5 1 8 6 7
BRIDGE ADAPTER
H15
H11
H22
H21
6 5 2 4 1 3
FOG LIGHT
FOG LIGHT
S1 FOG LIGHT SWITCH
WAY
WITH 57
ADAPTER
RFL
FOG
S2
JAPAN
FOG WITH 57 OR 56B
RFL WITH 58
58
56b
56a
C12
L15
B32
BRIDGE ADAPTER
87 86 85 30
G26
ADDITIONAL CE
S1
S2
8

RADIO

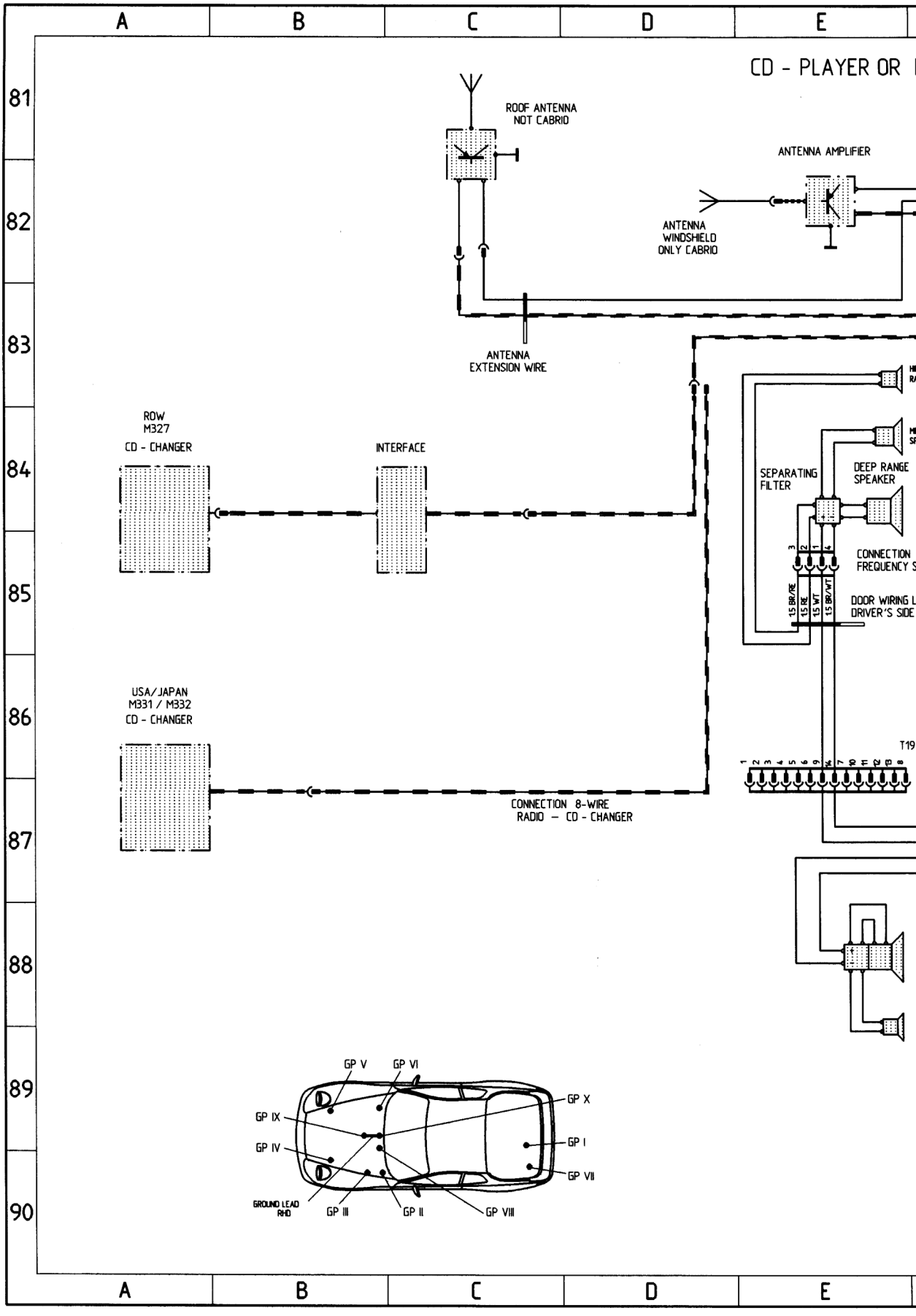

Printed in Germany - VI, 1992

OR RADIO WITH 4 FINAL STAGES AND EQUALIZER

WITH HIFI SPEAKERS

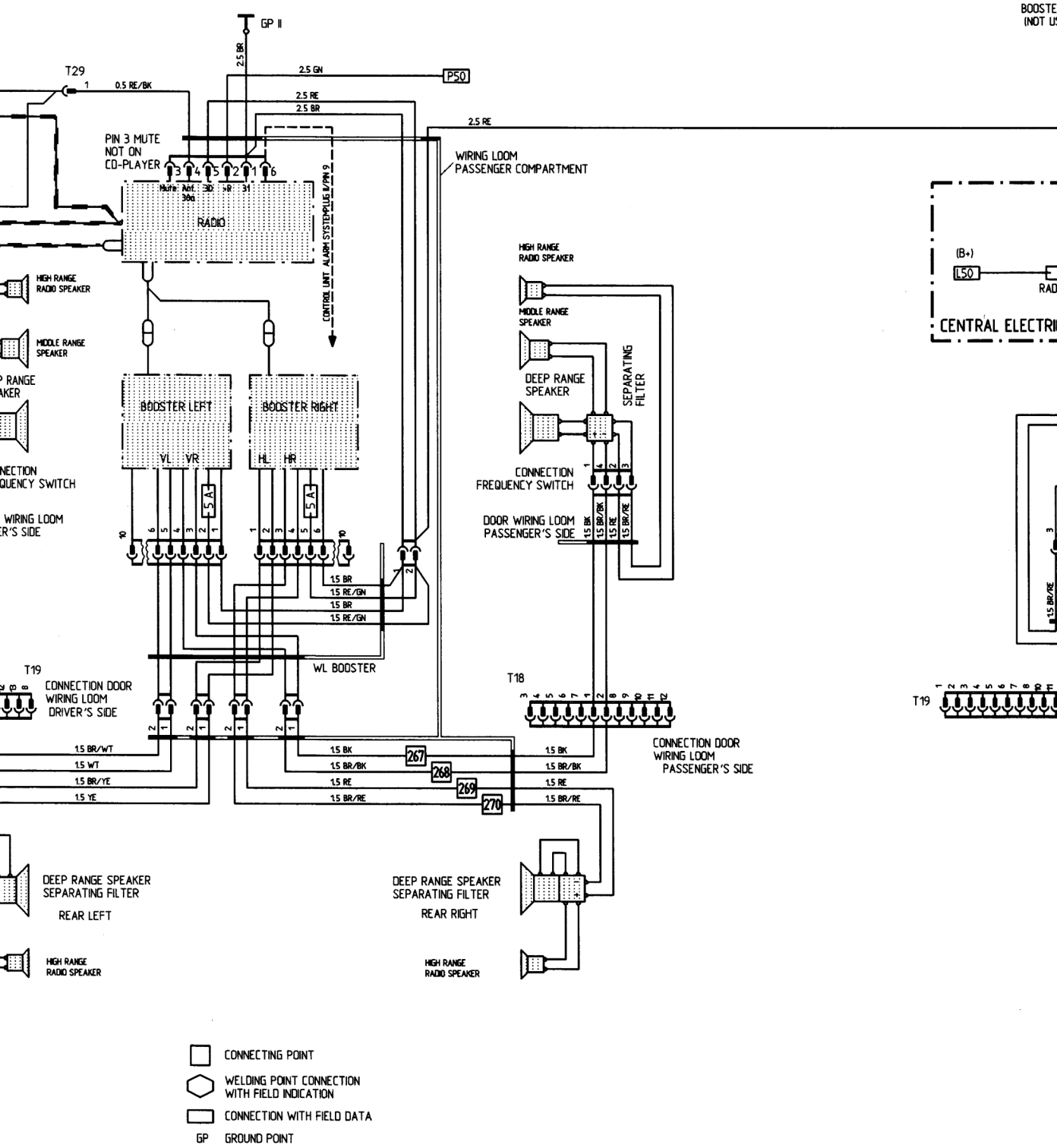

CONNECTING POINT

WELDING POINT CONNECTION WITH FIELD INDICATION

CONNECTION WITH FIELD DATA

GP GROUND POINT

WT = WHITE YE = YELLOW RE = RED VI = VIOLET BL = BLUE GN = GREEN GR = GREY BR = BROWN BK = BLACK

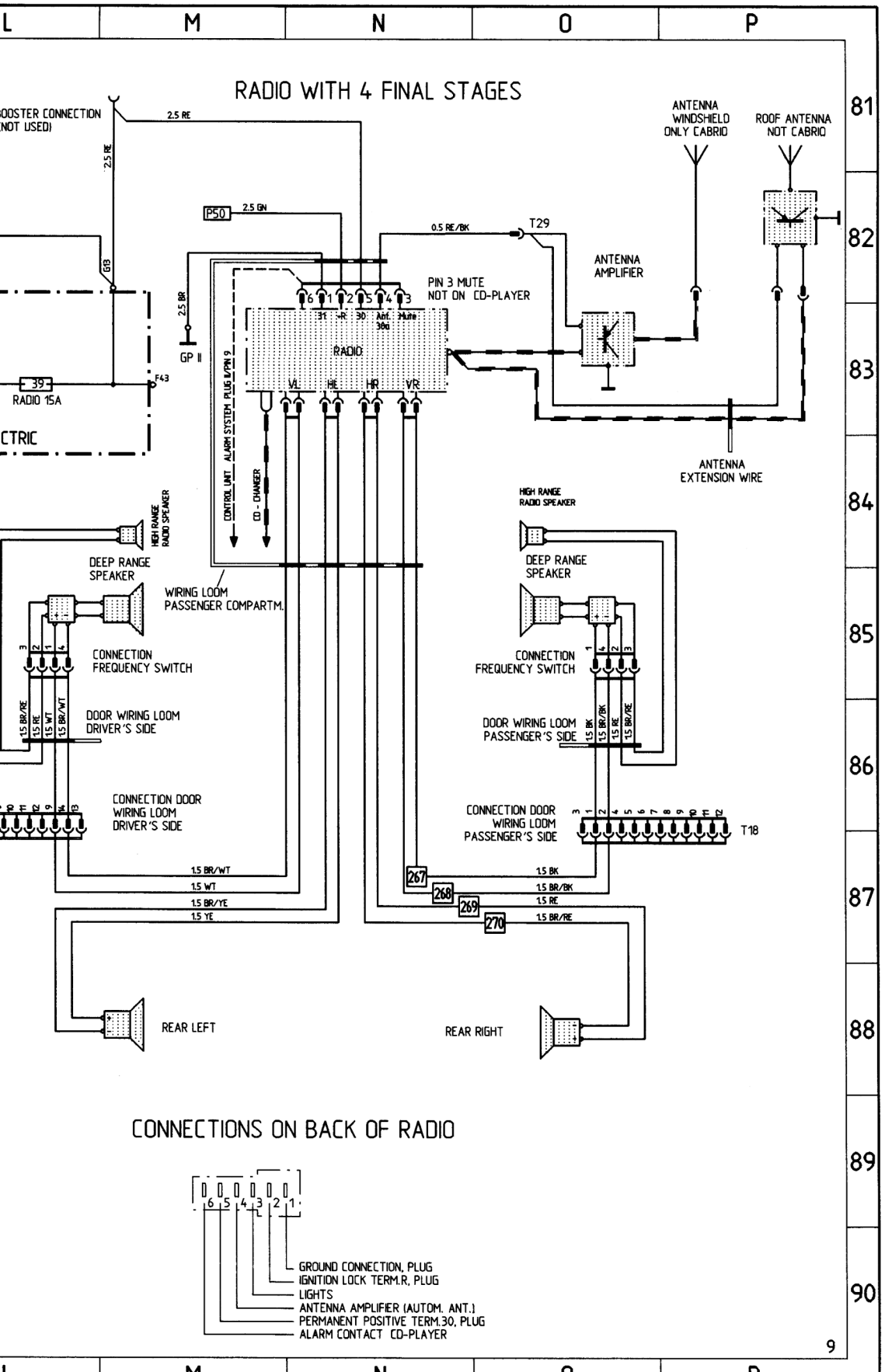
L
M
N
O
P
RADIO WITH 4 FINAL STAGES
81
82
83
84
85
86
87
88
89
90
BOOSTER CONNECTION (NOT USED)
2.5 RE
2.5 RE
G18
P50
2.5 GN
0.5 RE/BK
T29
ANTENNA WINDSHIELD ONLY CABRIO
ROOF ANTENNA NOT CABRIO
ANTENNA AMPLIFIER
PIN 3 MUTE NOT ON CD-PLAYER
2.5 BR
GP II
RADIO
31 R 30 Ant. 30a Mute
VL HL HR VR
CONTROL UNIT ALARM SYSTEM PLUG B/PIN 9
CD - CHANGER
F43
39
RADIO 15A
CTRIC
ANTENNA EXTENSION WIRE
HIGH RANGE RADIO SPEAKER
DEEP RANGE SPEAKER
WIRING LOOM PASSENGER COMPARTM.
CONNECTION FREQUENCY SWITCH
DOOR WIRING LOOM DRIVER'S SIDE
1.5 BR/RE
1.5 RE
1.5 WT
1.5 BR/WT
CONNECTION DOOR WIRING LOOM DRIVER'S SIDE
DOOR WIRING LOOM PASSENGER'S SIDE
1.5 BK
1.5 BR/BK
CONNECTION DOOR WIRING LOOM PASSENGER'S SIDE
T18
267
268
269
270
1.5 BR/WT
1.5 WT
1.5 BR/YE
1.5 YE
1.5 BK
1.5 BR/BK
1.5 RE
1.5 BR/RE
REAR LEFT
REAR RIGHT
CONNECTIONS ON BACK OF RADIO
6 5 4 3 2 1
GROUND CONNECTION, PLUG
IGNITION LOCK TERM.R, PLUG
LIGHTS
ANTENNA AMPLIFIER (AUTOM. ANT.)
PERMANENT POSITIVE TERM.30, PLUG
ALARM CONTACT CD-PLAYER
9

ABS, AIRBAG

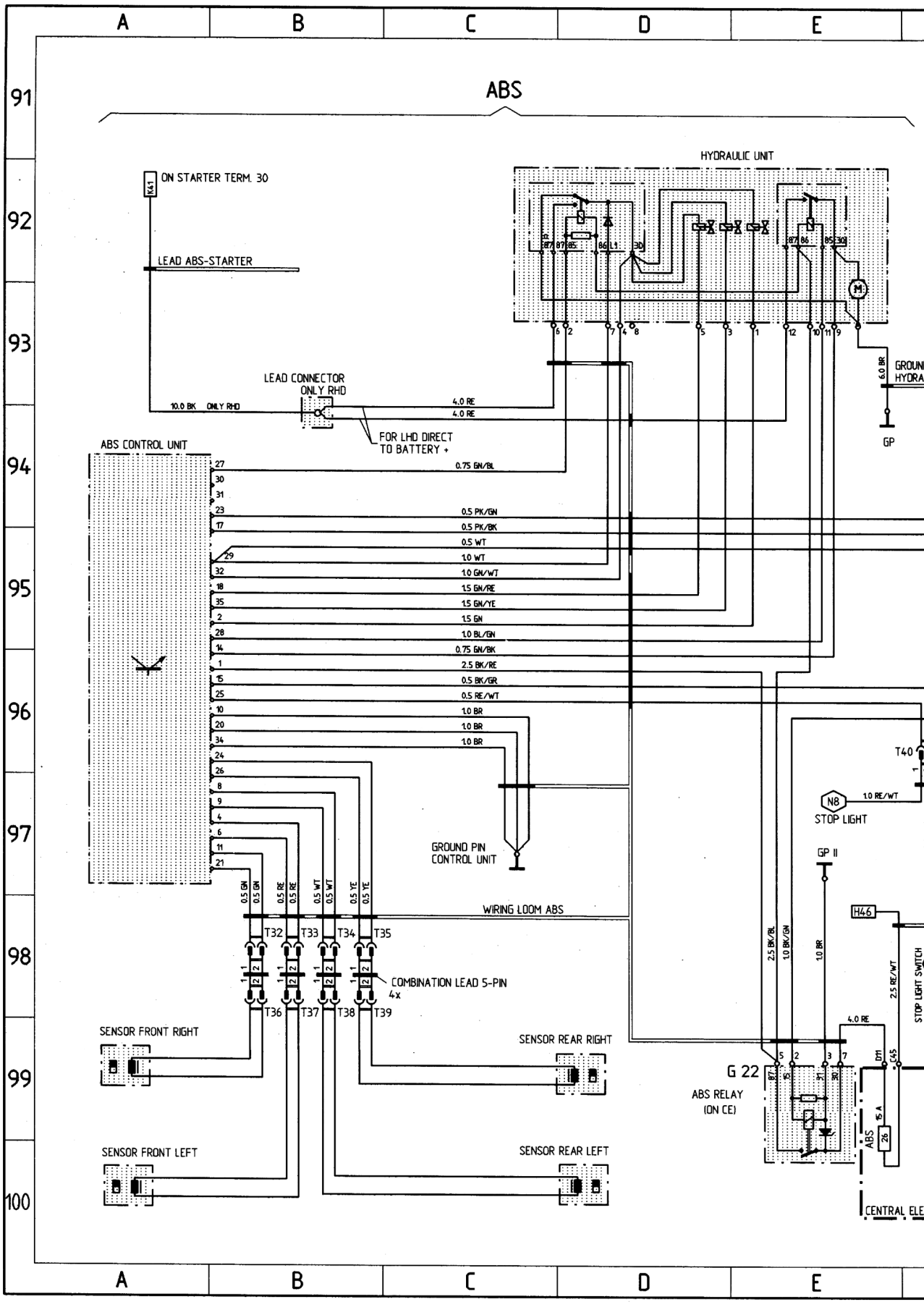

WT =
GN = G

Printed in Germany - VI , 1992

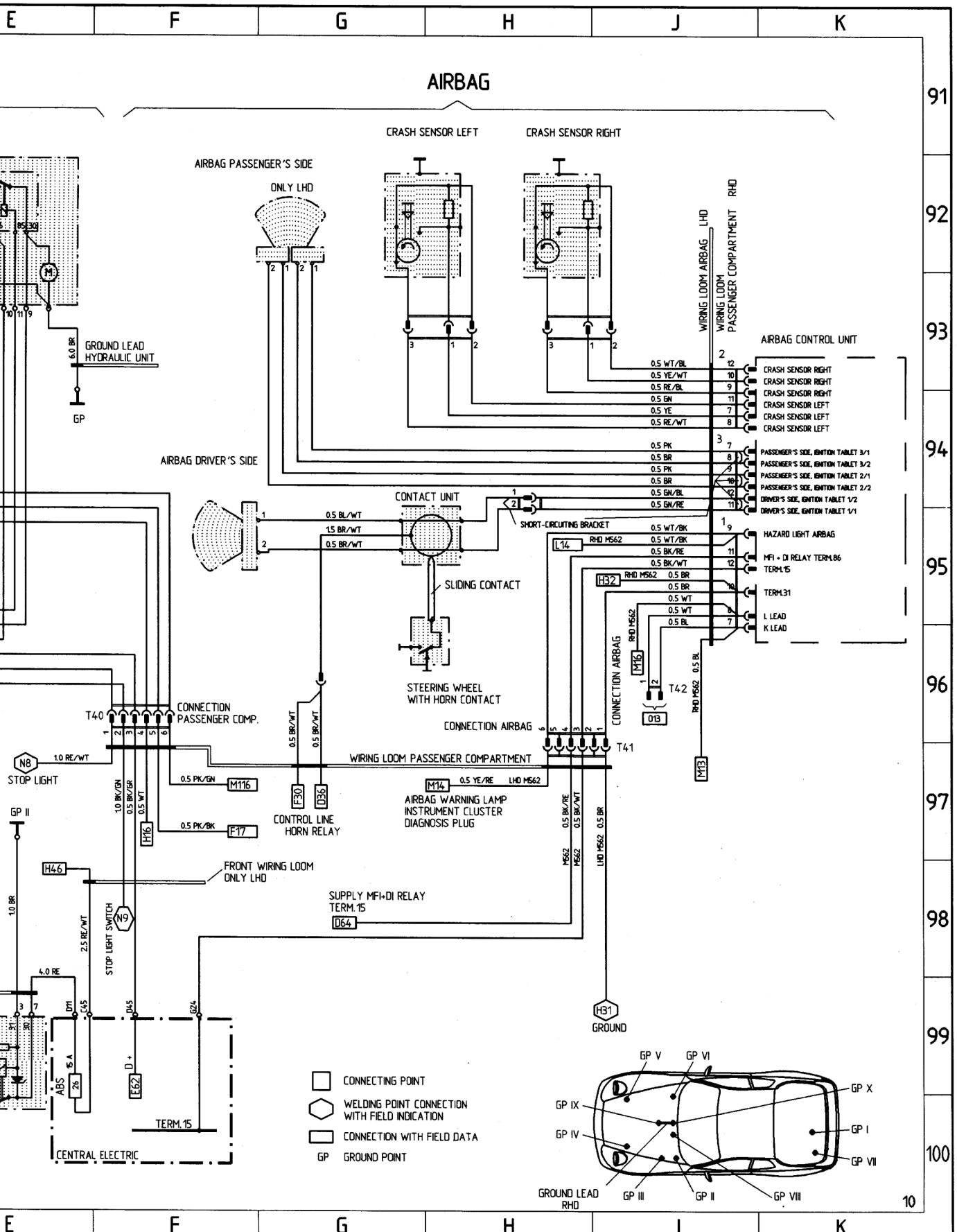

WT = WHITE YE = YELLOW RE = RED VI = VIOLET BL = BLUE
GN = GREEN GR = GREY BR = BROWN BK = BLACK

WIRING 968 CABRIO

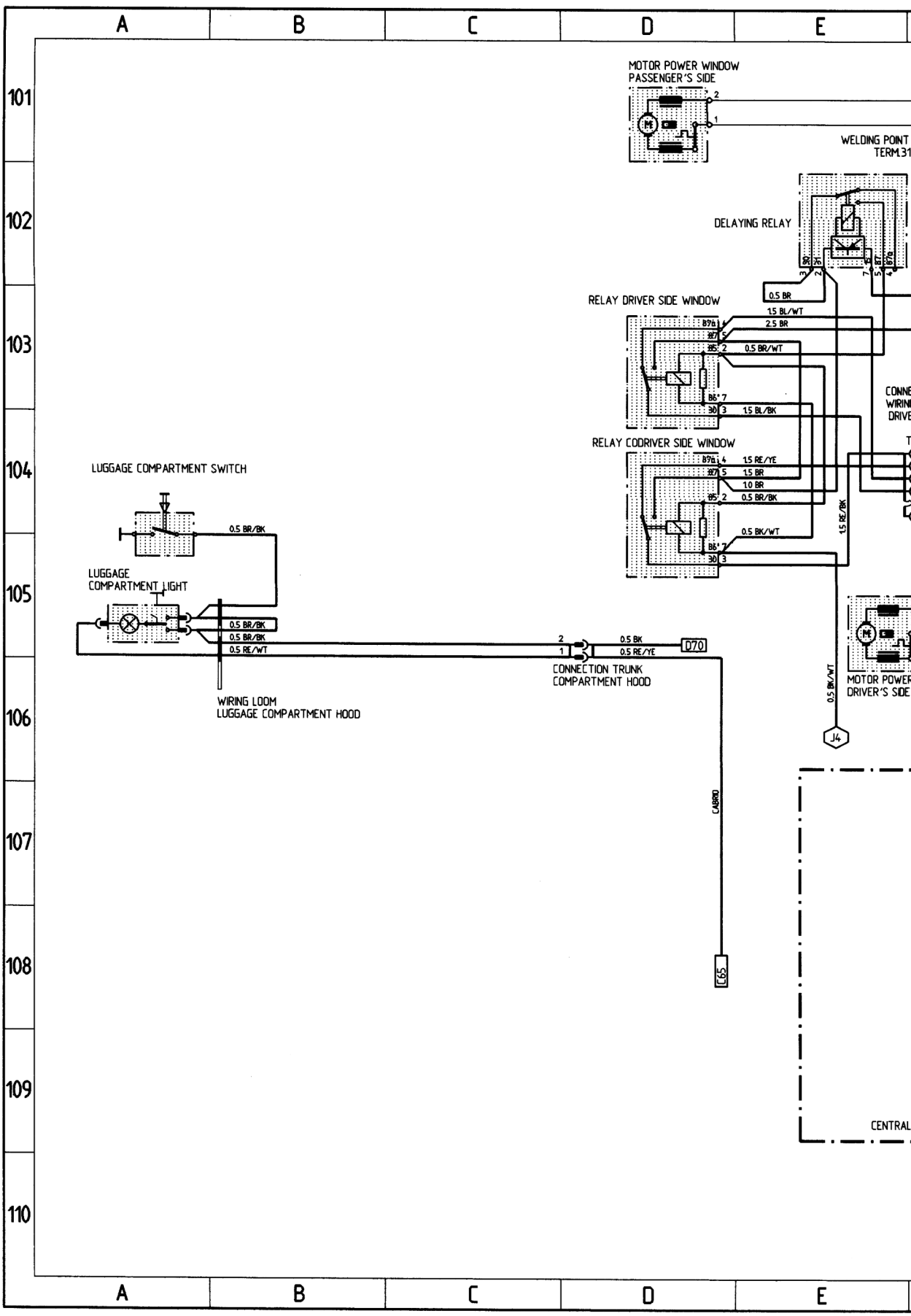

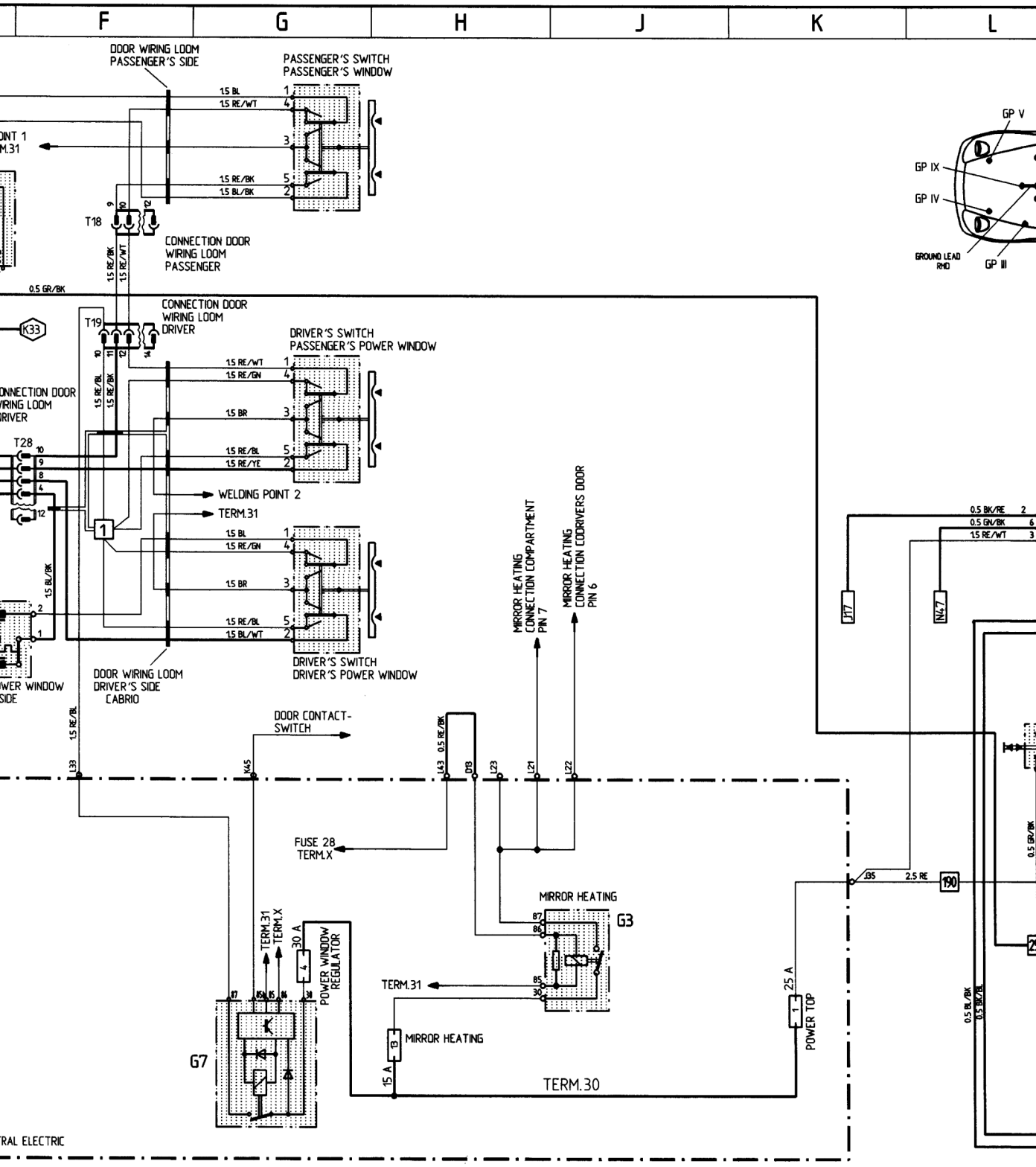
F
G
H
J
K
L
DOOR WIRING LOOM PASSENGER'S SIDE
PASSENGER'S SWITCH PASSENGER'S WINDOW
1.5 BL
1.5 RE/WT
1.5 RE/BK
1.5 BL/BK
T18
CONNECTION DOOR WIRING LOOM PASSENGER
1.5 RE/BK
1.5 RE/WT
0.5 GR/BK
K33
T19
CONNECTION DOOR WIRING LOOM DRIVER
DRIVER'S SWITCH PASSENGER'S POWER WINDOW
1.5 RE/WT
1.5 RE/GN
1.5 BR
1.5 RE/BL
1.5 RE/YE
T28
WELDING POINT 2
TERM.31
1.5 BL
1.5 BL/BK
1.5 BL/WT
DOOR WIRING LOOM DRIVER'S SIDE CABRIO
DRIVER'S SWITCH DRIVER'S POWER WINDOW
MIRROR HEATING CONNECTION COMPARTMENT PIN 7
MIRROR HEATING CONNECTION COORIVERS DOOR PIN 6
DOOR CONTACT-SWITCH
0.5 RE/BK
FUSE 28 TERM.X
MIRROR HEATING
G3
TERM.31
TERM.X
30 A
POWER WINDOW REGULATOR
G7
MIRROR HEATING
15 A
TERM.30
25 A
POWER TOP
GP V
GP IX
GP IV
GROUND LEAD RHD
GP III
J17
N47
0.5 BK/RE
0.5 GN/BK
1.5 RE/WT
2.5 RE
190
0.5 BL/BK
0.5 BK/BL
0.5 GR/BK
TRAL ELECTRIC
F
G
H
J
K
L
WT = WHITE
YE = YELLOW
RE = RED
VI = VIOLET
BL = BLUE
GN = GREEN
GR = GREY
BR = BROWN
BK = BLACK

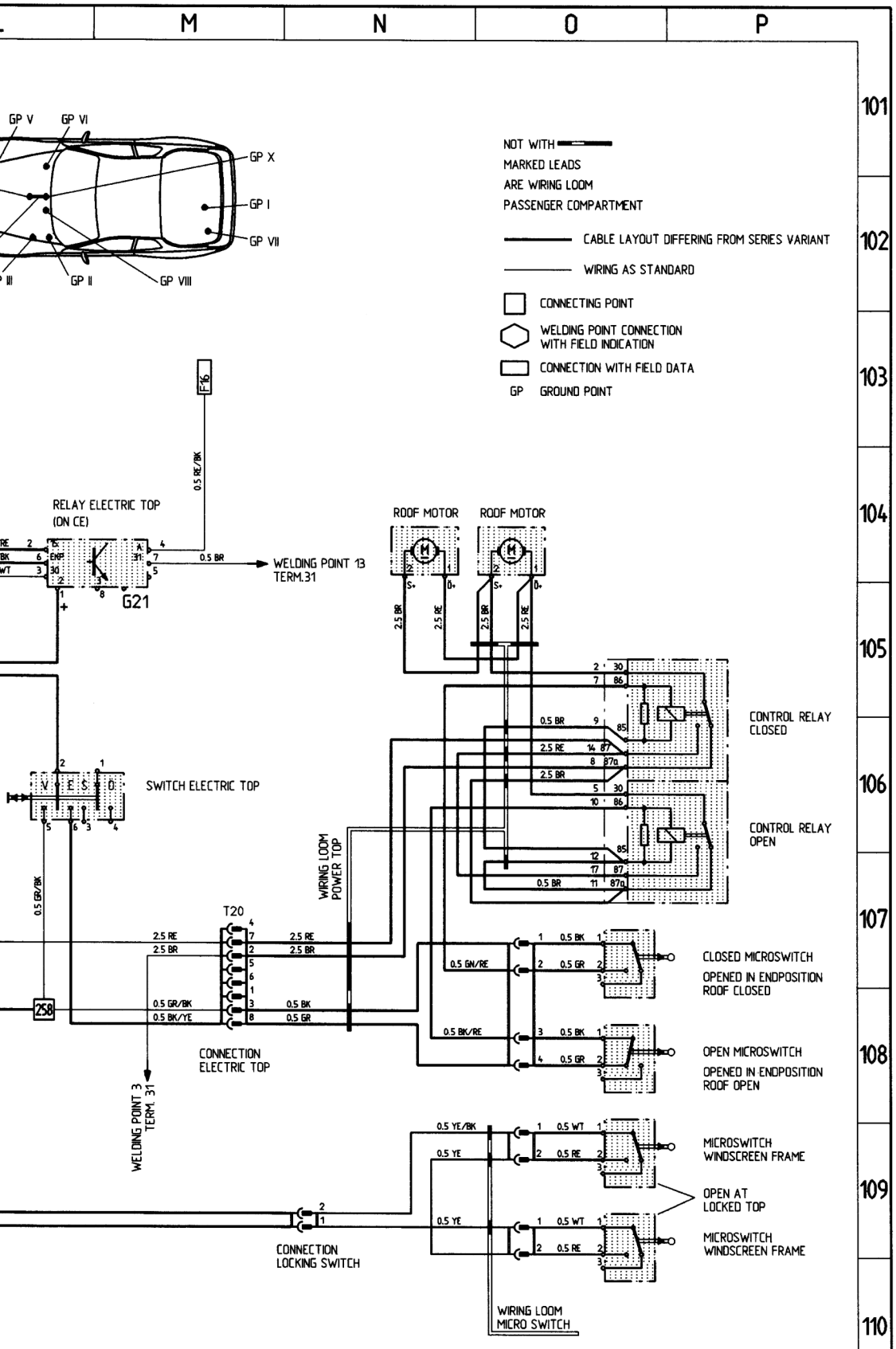
M
N
O
P
101
102
103
104
105
106
107
108
109
110
GP V
GP VI
GP X
GP I
GP VII
GP II
GP VIII
NOT WITH
MARKED LEADS
ARE WIRING LOOM
PASSENGER COMPARTMENT
CABLE LAYOUT DIFFERING FROM SERIES VARIANT
WIRING AS STANDARD
CONNECTING POINT
WELDING POINT CONNECTION WITH FIELD INDICATION
CONNECTION WITH FIELD DATA
GP GROUND POINT
F16
0.5 RE/BK
RELAY ELECTRIC TOP (ON CE)
G21
0.5 BR
WELDING POINT 13 TERM.31
ROOF MOTOR
ROOF MOTOR
2.5 BR
2.5 RE
CONTROL RELAY CLOSED
CONTROL RELAY OPEN
0.5 BR
2.5 RE
2.5 BR
SWITCH ELECTRIC TOP
WIRING LOOM POWER TOP
0.5 GR/BK
T20
2.5 RE
2.5 BR
0.5 GR/BK
0.5 BK/YE
0.5 BK
0.5 GR
258
CONNECTION ELECTRIC TOP
WELDING POINT 3 TERM. 31
0.5 GN/RE
0.5 BK/RE
0.5 BK
0.5 GR
CLOSED MICROSWITCH
OPENED IN ENDPOSITION ROOF CLOSED
OPEN MICROSWITCH
OPENED IN ENDPOSITION ROOF OPEN
0.5 YE/BK
0.5 YE
0.5 WT
0.5 RE
MICROSWITCH WINDSCREEN FRAME
OPEN AT LOCKED TOP
MICROSWITCH WINDSCREEN FRAME
CONNECTION LOCKING SWITCH
WIRING LOOM MICRO SWITCH
11

968 MODEL 93 SHEET 12

CONTROL UNIT AUTOMATIC TRANSMISSION

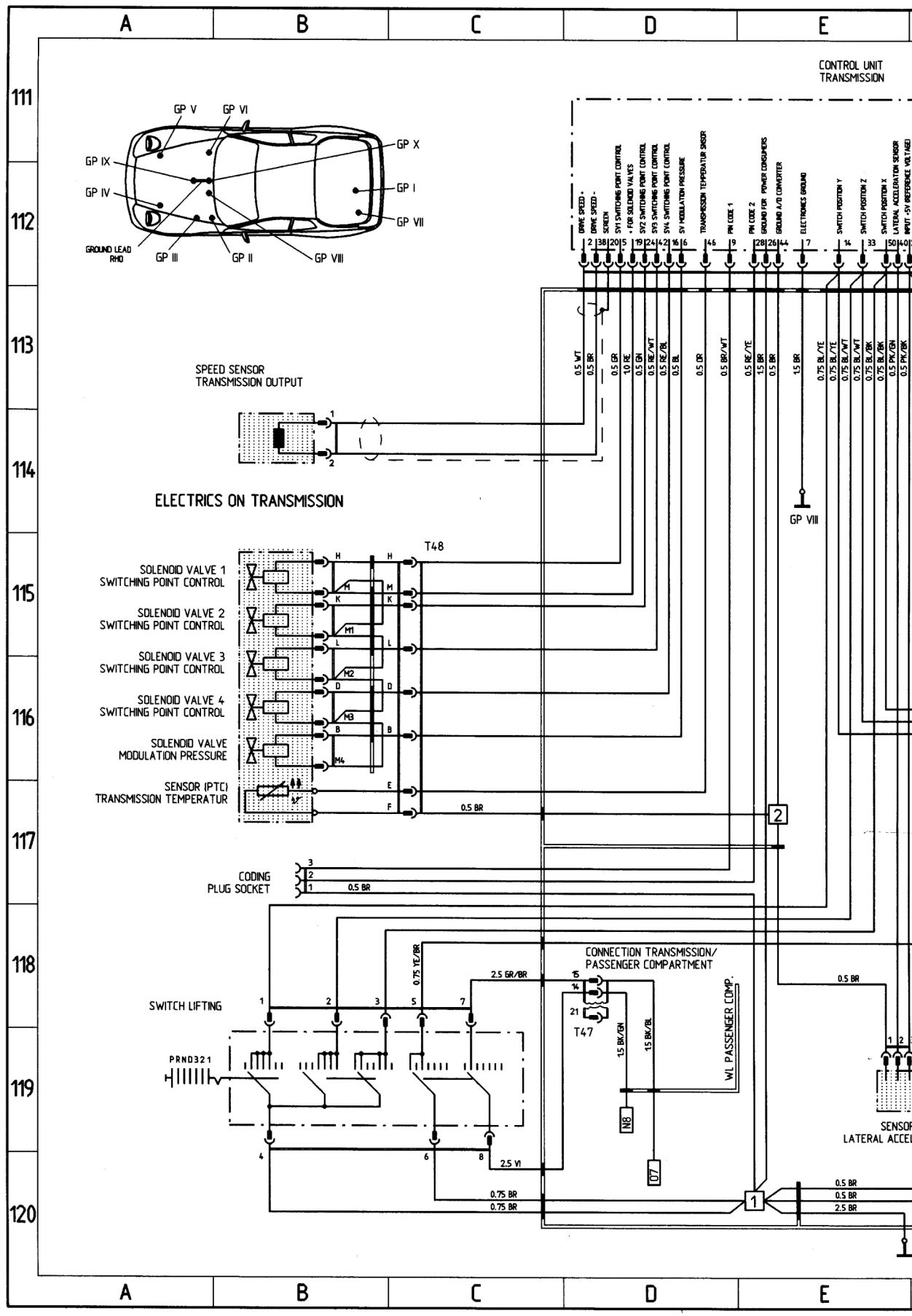

Printed in Germany - VI , 1992

UNIT
SSION

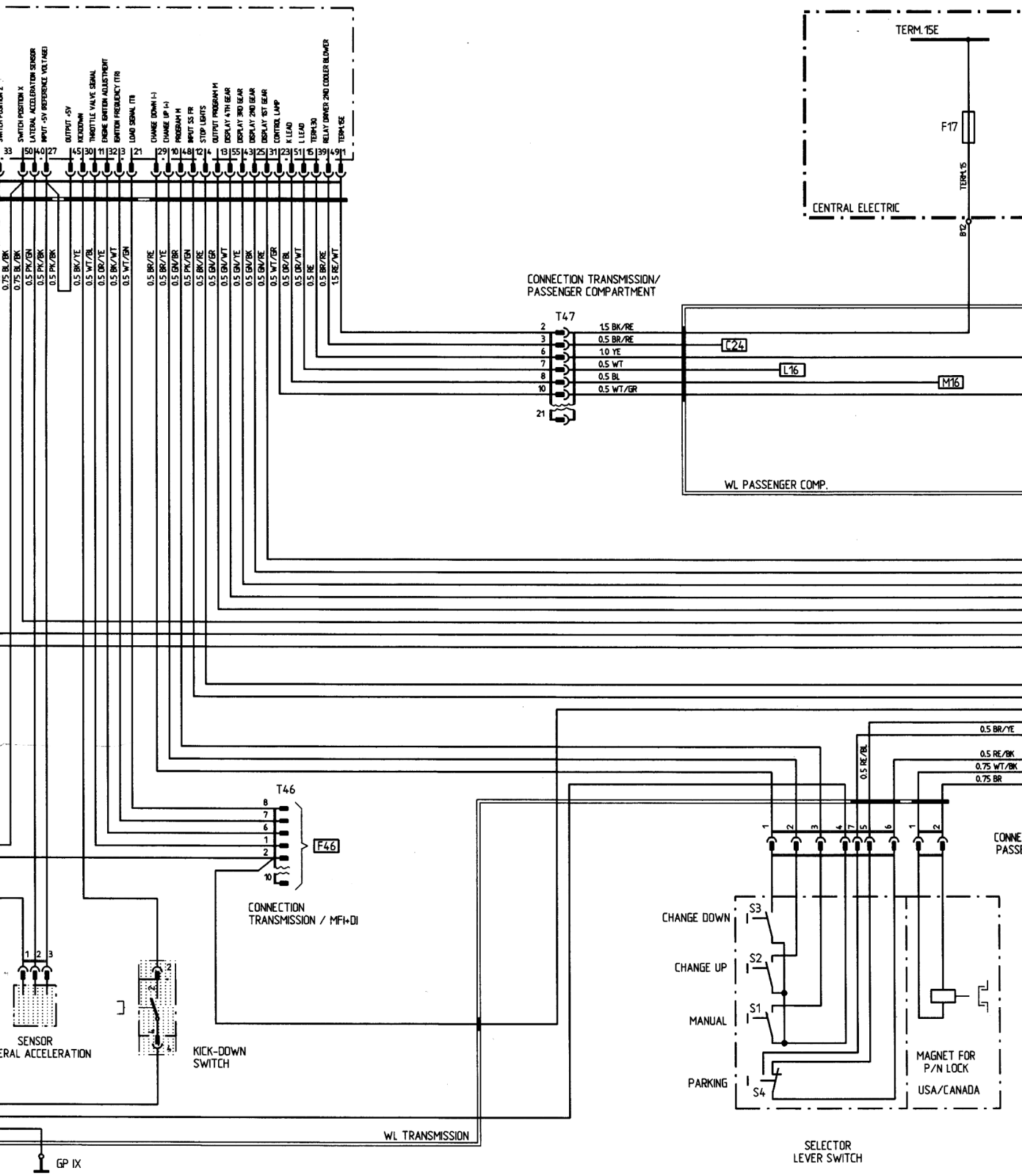

WT = WHITE YE = YELLOW RE = RED VI = VIOLET BL = BLUE GN = GREEN GR = GREY BR = BROWN BK = BLACK

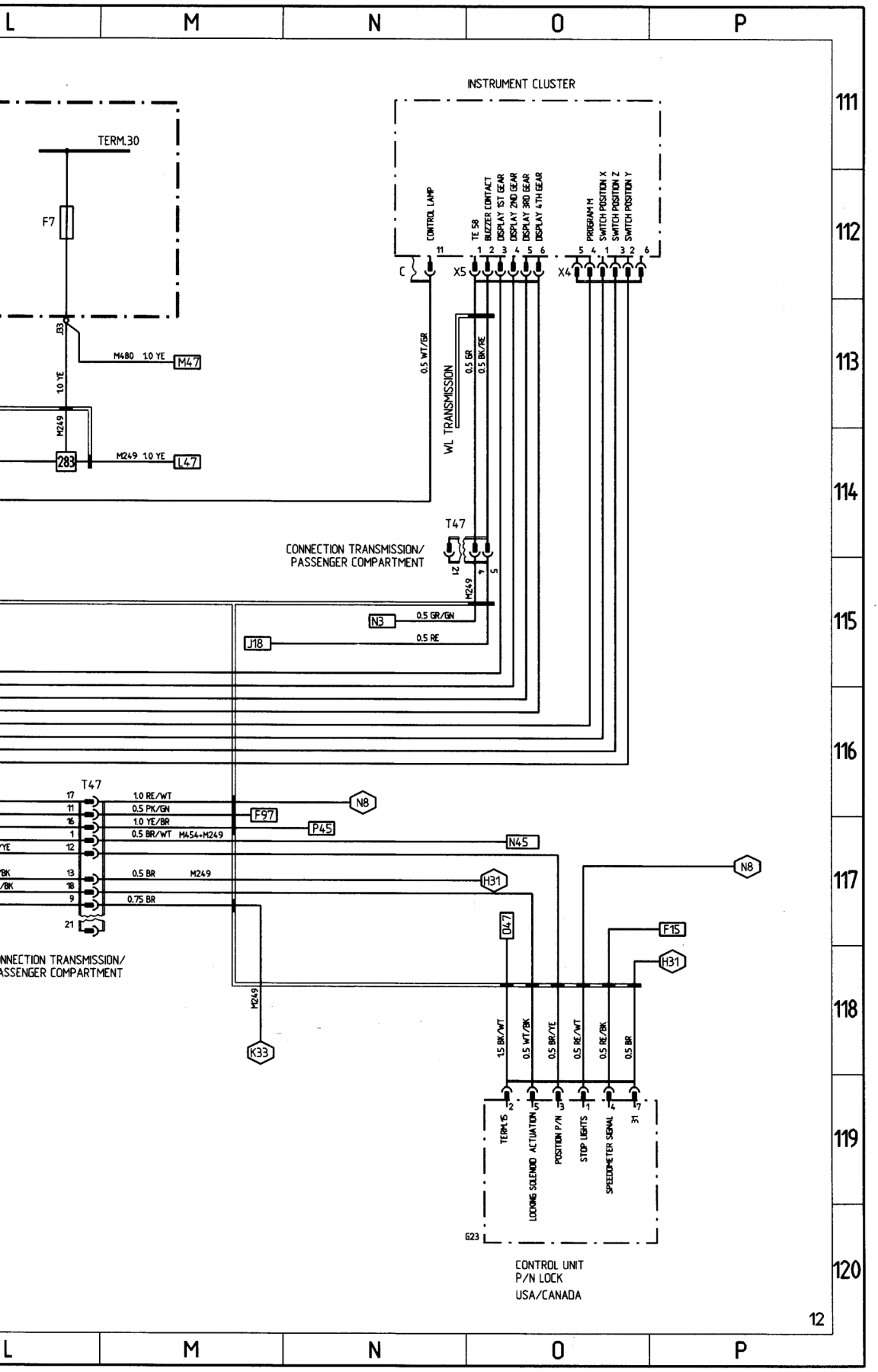
L
M
N
O
P
111
112
113
114
115
116
117
118
119
120
INSTRUMENT CLUSTER
CONTROL LAMP
TE 58
BUZZER CONTACT
DISPLAY 1ST GEAR
DISPLAY 2ND GEAR
DISPLAY 3RD GEAR
DISPLAY 4TH GEAR
PROGRAM M
SWITCH POSITION X
SWITCH POSITION Z
SWITCH POSITION Y
X5
X4
TERM.30
F7
J33
M480 1.0 YE
M47
1.0 YE
M249
283
M249 1.0 YE
L47
0.5 WT/GR
W/L TRANSMISSION
0.5 GR
0.5 BK/RE
T47
CONNECTION TRANSMISSION/
PASSENGER COMPARTMENT
M249
N3
0.5 GR/GN
J18
0.5 RE
T47
1.0 RE/WT
0.5 PK/GN
1.0 YE/BR
0.5 BR/WT M454+M249
0.5 BR M249
0.75 BR
N8
F97
P45
N45
H31
N8
D47
F15
H31
M249
K33
1.5 BK/WT
0.5 WT/BK
0.5 BR/YE
0.5 RE/WT
0.5 RE/BK
0.5 BR
TERM.15
LOCKING SOLENOID ACTUATION
POSITION P/N
STOP LIGHTS
SPEEDOMETER SIGNAL
31
G23
CONTROL UNIT
P/N LOCK
USA/CANADA
12

A B C D E

CONSTRUCTION COMPONENTS

DESIGNATION, FUNCTION	POSITION IN VEHICLE LHD	RHD	NOTE	FIELD IN WIRING DIAGRAM
ADDITIONAL CE	6cP	—	LEFT TO STEERING COLUMN	SHEET 6
ADDITIONAL CE	—	6cQ	LEFT TO GLOVE BOX	SHEET 6
AIR COMPRESSOR	3dO	3dO	ON ENGINE	A24
ALARM-PRIMED INDICATOR LAMP LEFT	12bR	12bR	IN PUSH-BUTTON OF LEFT DOOR	O66
ALARM-PRIMED INDICATOR LAMP RIGHT	12bK	12bK	IN PUSH-BUTTON OF RIGHT DOOR	O62
ALARM HORN	7bL	7bL	IN WATER BOX	F69
ALARM SWITCH ENGINE HOOD	2cO	2cO	ENGINE HOOD LOCK	A63
ANTENNA AMPLIFIER	7cL	7cL	IN FOOTWELL, RIGHT SIDE	E82,083
BATTERY	6cL	—	IN WATER BOX	H42
BATTERY	—	16cR	IN LEFT BOHLMANN COMPARTMENT	H42
BUZZER CONTACT	8cP	8cM	ON IGNITION LOCK	J18
CABRIO: ROOF MOTORS	14cN/O	14cN/O	BELOW THE PARCEL TRAY	N/O104
CABRIO: MOTOR POWER WINDOW PASSENGER'S SIDE	9dK	9dR	IN PASSENGER'S DOOR	D101
CABRIO: MOTOR POWER WINDOW DRIVER'S SIDE	9dR	9dK	ON DRIVER'S DOOR	E105
CABRIO: RELAY CODRIVER SIDE WINDOW	6dM	6dP	IN PASSENGER'S FOOTWELL	D104
CABRIO: RELAY DRIVER SIDE WINDOW	6dM	6dP	IN PASSENGER'S FOOTWELL	D103
CABRIO: POWER TOP			(G21) CE	L/M104
CABRIO: CONTROL RELAY ROOF WITH MICROSWITCHES	14cM	14cM	IN LUGGAGE COMPARTMENT ON FIREWALL	O105-110
CABRIO: DELAYING RELAY	6dM	6dP	IN PASSENGER'S FOOTWELL	E102
CATALYTIC CONVERTER CONTROL (ONLY JAPAN)			(G24) ADDITIONAL CE	D20
CENTRAL ELECTRIC	7bQ	7bQ	LEFT IN WATER BOX	SHEET 6
CLUTCH SWITCH	7dP	7dM	TO FOOT CONTROLS	N44-45
CODING PLUG SOCKET	7dM	7dP	IN PASSENGER'S FOOTWELL	B50
CONTACT UNIT AIRBAG	9bP	9bM	ON STEERING WHEEL	G/H95
CONTROL UNIT ABS	7cL	7cL	IN FOOTWELL, RIGHT SIDE	A94-97
CONTROL UNIT AIRBAG	6cM	7bO/P	IN PASSENGER'S FOOTWELL	K93-96
CONTROL UNIT ALARM SYSTEM/CENTRAL LOCKING SYSTEM	6dM	6dP	IN PASSENGER'S FOOTWELL	D-F65-67
CONTROL UNIT MFI+DI	6dM	6dP	IN PASSENGER'S FOOTWELL	D42-50
CONTROL UNIT TRANSMISSION	15cK	15cK	IN REAR RIGHT FENDER	D-G111-112
CONTROL UNIT GONG			(G25) ADDITIONAL CE	K/L19-20
CONTROL UNIT LIFTING ROOF			(G21) CE	H35
CONTROL UNIT LIGHT COMBINATION			(G17+G18) CE	F/G2
CONTROL UNIT P/N LOCK (USA/CANADA)			(G23) ADDITIONAL CE	O119
CONTROL UNIT CRUISE CONTROL	7cR	7cR	IN LEFT FOOTWELL	M44/45
CONTROL UNIT SEAT HEATER LEFT SEAT	10dQ	10dQ	UNDER THE SEAT	O/P25-26
CONTROL UNIT SEAT HEATER RIGHT SEAT	10dL	10dL	UNDER THE SEAT	L21
COOLANT TEMP. SENSOR	4cO	4cO	ON ENGINE BLOCK	B45
COOLANT TEMP. SWITCH AND SENSOR	4dP	4dP	ON ENGINE BLOCK	E/F47
CRASH SENSOR LEFT	7cQ	7cQ	INSIDE FIREWALL LEFT	G95
CRASH SENSOR RIGHT	7cL	7cL	INSIDE FIREWALL RIGHT	G92
DIAGNOSIS PLUG SOCKET	7dM	7dP	IN PASSENGER'S FOOTWELL	M12
DRIVE LEFT HEADLIGHT VERTICAL AIM CONTROL	2cP	2cP	ON HEADLIGHT LEFT	A6
DRIVE RIGHT HEADLIGHT VERTICAL AIM CONTROL	2cM	2cM	ON HEADLIGHT RIGHT	A5
DRIVE LEFT CENTRAL LOCK	11cR	11cR	IN DOOR LEFT	O64-65
DRIVE RIGHT CENTRAL LOCK	11cK	11cK	IN DOOR RIGHT	O67-68
DRIVE CRUISE CONTROL	6cL	6cL	IN ENGINE COMPARTMENT	L44
ELECTRICS ON TRANSMISSION	15/16dP	15/16dP	IN TRANSMISSION	B115-117
FAN MOTOR 1	3cN	3cN	ON RADIATOR	A28
FAN MOTOR 2	3cN	3cN	ON RADIATOR	A27
FLOAT SWTCH BRAKE FLUID	6cP	6cM	IN BRAKE FLUID RESERVOIR	C18
FUEL LEVEL SENSOR	15dN	15dN	IN FUEL TANK	C17
FUEL PUMP	15dL	15dL	ON BASE REAR RIGHT	N46-47
GAS PRESSURE PROP LEFT	15bQ	15bQ	ON TAILGATE	K25

A B C D E

Printed in Germany - VI , 1992

DESIGNATION, FUNCTION	POSITION IN VEHICLE LHD	RHD	NOTE	FIELD IN WIRING DIAGRAM
GAS PRESSURE PROP RIGHT	15bL	15bL	ON TAILGATE	L26
GENERATOR	3cO	3cO	ON ENGINE	J/K41/42
HALL SENSOR	3cM	3cM	ON TOOTHED BELT HOUSING OVER	B46
HEADLIGHT CLEANERS PUMP (HCS)	6cL	6cL	IN FRONT RIGHT FENDER	A25-26
HEATED OXYGEN SENSOR	2dP	2dP	ON RADIATOR	B45-46
HYDRAULIC UNIT	7dK	7dK	IN FRONT RIGHT FENDER	D/E92
IDLE SPEED POSITIONER	5cO	5cO	IN ENGINE COMPARTMENT	B49
IGNITION COIL	3cL	3cL	WHEEL HOUSING RIGHT FRONT	J45
INSIDE TEMPERATURE SENSOR	8cM	8cP	IN CONTROL PANEL AREA	E21
KICK-DOWN SWITCH	7dO	7dN	TO FOOT CONTROLS	F119
KNOCK SENSOR 1	5cN	5cN	ON ENGINE BLOCK	B47
KNOCK SENSOR 2	5cN	5cN	ON ENGINE BLOCK	B48
MAGNET P/N LOCK (USA/CANADA)	9dN	9dN	AT SELECTOR LEVER SUPPORT	K/L119
MASS AIR FLOW SENSOR	3cP	3cP	IN ENGINE COMPARTMENT	F42
MICRO SWITCH ROOF CLOSED	10aO	10aO	IN ROOF	K40
MOTOR CONCEALED HEADLIGHT LEFT	2dP	2dP	AT LEFT HEADLAMP BODY	D1
MOTOR CONCEALED HEADLIGHT RIGHT	2dM	2dM	AT RIGHT HEADLAMP BODY	E1
MOTOR LIFTING ROOF WITH CONTROL RELAY AND MICRO SWITCH	16dQ	16dQ	IN LEFT BOHLMANN COMPARTMENT	K36-40
MOTOR POWER WINDOW PASSENGER'S SIDE	9dK	9dR	IN PASSENGER'S DOOR	D31
MOTOR POWER WINDOW DRIVER'S SIDE	9dR	9dK	ON DRIVER'S DOOR	D35
MOTOR WINDSHIELD WIPER	7bO	7bN	IN WATER BOX	H/J25-27
OIL PRESSURE SENSOR/ PRESSURE SWITCH	3dM	3dM	ON ENGINE BLOCK BELOW OIL FILTER	F47
OIL TEMPERATURE SENSOR	5cN	5cN	AT CRANKCASE	B44
OUTSIDE TEMPERATURE SENSOR	6cN	6cN	IN HEATER BOX	A23
PARKING BRAKE CONTACT	9dR	9dK	ON HAND BRAKE LEVER	C15-16
PRESSURE SWITCH AIR CONDITIONING SYSTEM	3dQ	3dQ	IN ENGINE COMPARTMENT FRONT LEFT	A24-25
PUMP WINDSCREEN WASH	6cL	6cL	IN FRONT RIGHT FENDER	A26
RELAY ABS			(G22) CE	E99
RELAY AC			(G19) CE	A22
RELAY FOG LIGHT CUTOFF (ONLY JAPAN)			(G26) ADDITIONAL CE	H1
RELAY START LOCK (ONLY AUTOMATIC-TRANSMISSION)			(G20) CE	P44
RELAY DAYTIME RUNNING LIGHT (ONLY CANADA)			(G26) ADDITIONAL CE	L3
SEAT BELT CONTACT	10dO	10dN	TO BELT BUCKLE	C15
SENSOR LATERAL ACCELERATION	8eN	8eN	UNDER THE RIGHT SEAT	E119
SPEED SENSOR / MFI + DI	6cN	6cN	ABOVE FLYWHEEL	B49
SPEED SENSOR CU TRANSMISSION	14dM	14dM	BY TRANSMISSION RIGHT	B114
STARTER	7cN	7cN	ON CLUTCH BELL HOUSING	L42
STOP LIGHT SWITCH	7dP	7dM	TO FOOT CONTROLS	D9
SWITCH TAILGATE UNLOCKING	7dQ	7dL	IN DRIVER'S FOOTWELL	F31
SWITCH COOLING WATER TEMPERATURE	2dP	2dP	ON RADIATOR	A29-30
SWITCH OIL LEVEL WARNING	6eN	6eN	UNDER THE ENGINE ON OIL PAN	F43
SWITCH BACKUP LIGHT	15dO	15dO	(ONLY TRANSMISSION)	D7-8
TAILGATE UNLOCKING MOTOR	18cM	18cM	IN LUGGAGE COMPARTMENT AT END-PANEL	G/H33
TEMPERATURE SENSOR FOR CATALYZER	9eN	9eN	ON CATALYZER	C19
THROTTLE VALVE POTENTIOMETER	4/5cO	4/5cO	ON THROTTLE VALVE ASSEMBLY	B47
TWO-TONE HORN 1	3cQ	3cQ	IN FRONT LEFT FENDER	A39
TWO-TONE HORN 2	3cQ	3cQ	IN FRONT LEFT FENDER	A40
VALVE CAMSHAFT CONTROL	5cM	5cM	AT CYLINDER HEAD COVER	B44
VALVE TANK VENTING	6cQ	6cQ	IN ENGINE COMPARTMENT (ONLY CAT.)	B43

L M N O P

1 2 3 4 5 6 7 8 9 10 11 12 13 14 15 16 17 18

a b c d e

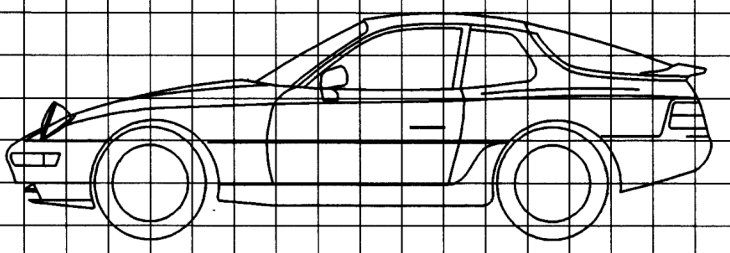

K L M N O P Q R

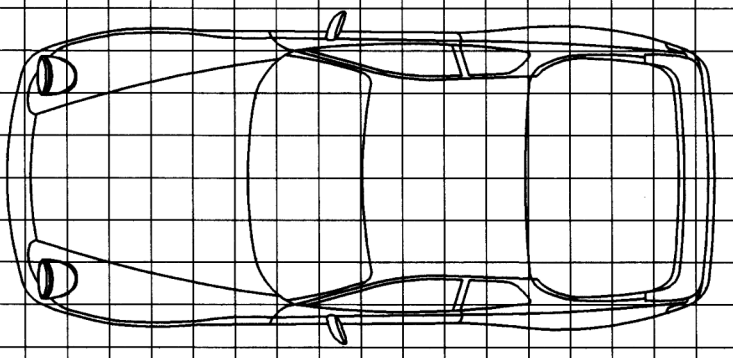

1 2 3 4 5 6 7 8 9 10 11 12 13 14 15 16 17 18

13

L M N O P

PLUG CONNECTIONS, GROUND POINTS, ABBREVIATIONS

A | B | C | D | E

PLUG CONNECTIONS

CODE	NUMBER OF PINS	DESIGNATION, FUNCTION	POSITION IN VEHICLE LHD	POSITION IN VEHICLE RHD	NOTE
T1	14	WL PASSENGER COMPARTMENT / WL MFI+DI	6dM	6dP	IN PASSENGER'S FOOTWELL
T2					
T3					
T4	2	BRAKE PAD WEAR CONTACT FRONT RIGHT / COMBI. LEAD	5dL	5dL	LOW ON SHOCK ABSORBER
T5	2	COMB. LEAD RIGHT / WL FRONT (BVA)	6cL	6cL	IN ENGINE COMPARTMENT
T6	2	COMB. LEAD LEFT / WL FRONT (BVA)	6cQ	6cQ	IN ENGINE COMPARTMENT
T7	2	BRAKE PAD WEAR CONTACT FRONT LEFT / COMBI. LEAD	5dQ	5dQ	LOW ON SHOCK ABSORBER
T8	2	BRAKE PAD WEAR CONTACT REAR RIGHT / COMBI. LEAD	14dL	14dL	ON SEMI-TRAILING ARM
T9	2	COMB. LEAD RIGHT / WL PASSENGER COMP.	15dM	15dM	ABOVE DRIVE SHAFTS ON LUGGAGE COMPARTMENT PANEL
T10	2	COMB. LEAD LEFT / WL PASSENGER COMP.	15dP	15dP	
T11	2	BRAKE PAD WEAR CONTACT REAR LEFT / COMBI. LEAD	14dQ	14dQ	ON SEMI-TRAILING ARM
T12	6	WL HEATER, AIR CONDITIONING / PASSENGER COMP.	7cO/N	7cO/N	IN CONTROL PANEL AREA
T13	7	WL PASSENGER COMPARTMENT / ENGINE HOOD	6bP	6bP	IN ENGINE HOOD
T14	8	SEAT RIGHT / WL PASSENGER COMPARTMENT	11eM	11eM	LOW ON SEAT
T15	8	SEAT LEFT / WL PASSENGER COMPARTMENT	11eP	11eP	LOW ON SEAT
T16	4	REAR WINDOW WIPER, HIGH MOUNTED STOP LIGHT/ WL PASSENGER COMP. ONLY COUPE	14cQ	14cQ	BEHIND C-PILLAR
T17					
T18	12	WL PASSENGER COMPARTMENT / WL PASSENGER'S DOOR ONLY COUPE	7dK	7dR	IN PASSENGER'S FOOTWELL
T18	12	WL PASSENGER COMPARTMENT / WL PASSENGER'S DOOR ONLY CABRIO	7dK	7dR	IN PASSENGER'S FOOTWELL
T19	14	WL PASSENGER COMPARTMENT / WL DRIVER'S DOOR ONLY COUPE	7dR	7dK	IN DRIVER'S FOOTWELL
T19	14	WL PASSENGER COMPARTMENT / WL DRIVER'S DOOR ONLY CABRIO	7dR	7dK	IN DRIVER'S FOOTWELL
T20	8	WL PASSENGER COMPARTMENT / WL SUN ROOF ONLY COUPE	16dQ	16dQ	IN BOHLMANN COMPARTMENT
T20	8	WL PASSENGER COMPARTMENT / WL POWER TOP ONLY CABRIO	16dQ	16dQ	IN BOHLMANN COMPARTMENT
T21	14	WIRING LOOM MFI + DI / WIRING LOOM FRONT END	6cP	6cP	IN ENGINE COMPARTMENT
T22	2	CODING PLUG / MFI + DI	6dM	6dP	IN PASSENGER'S FOOTWELL
T23					
T24	2	WL GENERATOR STARTER / WL FRONT END	6cQ	6cO	IN ENGINE COMPARTMENT
T25					
T26	19	DIAGNOSIS PLUG	6dL	6dO	IN PASSENGER'S FOOTWELL
T27	12	WL PASSENGER COMPARTMENT, / WL PASSENGER'S DOOR	7dK	7dR	IN PASSENGER'S FOOTWELL
T28	12	WL PASSENGER COMPARTMENT / WL DRIVER'S DOOR	7dR	7dK	IN DRIVER'S FOOTWELL
T29	1	ANTENNA AMPLIFIER / WL PASSENGER COMP.	7cO	7cO	BEHIND THE RADIO
T30					
T31					
T32	2	WL ABS / COMBINATION LEAD FR	6cL	6cL	IN ENGINE COMPARTMENT
T33	2	WL ABS / COMBINATION LEAD FL	6cQ	6cQ	IN ENGINE COMPARTMENT
T34	2	WL ABS / COMBINATION LEAD RL	15dP	15dP	ABOVE DRIVE SHAFTS
T35	2	WL ABS / COMBINATION LEAD RR	15dM	15dM	ON LUGGAGE COMPARTMENT PANEL
T36	2	COMB. LEAD FR / ABS-SENSOR FR	5dL	5dL	LOW ON SHOCK ABSORBER
T37	2	COMB. LEAD FL / ABS-SENSOR FL	5dQ	5dQ	LOW ON SHOCK ABSORBER
T38	2	COMB. LEAD RL / ABS-SENSOR RL	14dQ	14dQ	ON SEMI-TRAILING ARM
T39	2	COMB. LEAD RR / ABS-SENSOR RR	14dL	14dL	ON SEMI-TRAILING ARM
T40	6	WL PASSENGER COMPARTMENT / WL ABS	6dM	6dM	IN FOOTWELL, RIGHT SIDE
T41	6	WL PASSENGER COMPARTMENT / WL AIRBAG	6dM	7cO/P	IN PASSENGER'S FOOTWELL
T42	2	WL PASSENGER COMPARTMENT / WL AIRBAG	6cM	—	IN PASSENGER'S FOOTWELL
T43	3	SPEED- REFERENCE MARK SENSOR / MFI + DI	6cN	6cN	ON ENGINE REAR
T44	3	HEATED OXYGEN SENSOR / MFI+DI	6cN	6cN	ON ENGINE REAR
T45	2	WL PASSENGER COMPARTMENT/ FUEL PUMP	13dM	13dM	AT TRANSMISSION SUPPORT
T46	10	WL MFI+DI / WL TRANSMISSION	7cM	7cP	IN PASSENGER'S FOOTWELL
T47	21	WL PASSENGER COMPARTMENT / WL TRANSMISSION	7cK	7cL	IN PASSENGER'S FOOTWELL
T48	8	WL TRANSMISSION/ ELECTRICS ON TRANSMISSION ONLY M249	15/16dP	15/16dP	ON GEARBOX

A | B | C | D | E

Printed in Germany - VI , 1992

	FIELD IN WIRING DIAGRAM
	N15, F44/45
	A15
	A16
	A18
	A19
	P15
	P16
L	P18
	P19
	D23
	J27/28, B64
	L22
	N27
	023
	BC32, HJ86, OP86
	F102, HJ86, OP86
	BC34, E86, L86
	F103, E86, L86
	H38
	M107/108
	G48/49
	A50
	J43
	L/N12
	M63-65
	M68,E/F104
	F82, D82
	B98
	B98
	B98
EL	B98
	B98
	B98
	B98
	B98
	F96
	H97
	J96, 013
	B49
	B45/46
	M47
	F46, G118
	D118, H114, N114, L117
	C115-117

GROUND POINTS

CODE	DESIGNATION, FUNCTION	POSITION IN VEHICLE LHD	RHD
MP I	COVER PANEL	18c0	18c0
MP II	INSIDE FIREWALL ELECTRONICS CHASSIS	7cP	7cP
MP III	INSIDE FIREWALL CABLE TO GROUND	7cP	7cP
MP IV	LONGITUDINAL SUPPORT	3dP	3dP
MP V	LONGITUDINAL SUPPORT	3dM	3dM
MP VI	BODY BATTERY LHD	6cL	—
MP VII	BODY BATTERY RHD	—	16cQ
MP VIII	ENGINE BLOCK MFI+DI ELECTRONICS CHASSIS	6cQ	6cO
MP IX	CLUTCH BELL HOUSING BATTERY LEAD LHD MFI + DI CABLE TO GROUND	7cO	7cO
MP X	BODY RHD FIREWALL	—	7cO

ABBREVIATIONS

CODE	MEANING	CODE	MEANING
ABS	ANTILOCK BRAKING SYSTEM	MFI + DI	DIGITAL ENGINE ELECTRONICS
AC	AIR CONDITIONING SYSTEM	NO	NUMBER
ADL	ADDITIONAL DRIVING LIGHTS	NTC	NEGATIVE TEMPERATURE COEFFICIENT
CE	CENTRAL ELECTRIC	OP	OPEN
CL	CLOSE	PIN	PIN
CLS	CENTRAL LOCKING SYSTEM	PL	PLUG
CP	CONNECTING POINT	POT	POTENTIOMETER
CU	CONTROL UNIT	RA	REAR AXLE
DEF	DEFROST	RFL	REAR FOG LIGHT
DP	DISCONNECTING POINT	RHD	RIGHT-HAND DRIVE
ESO	ENGINE-SPEED SENSOR OUTPUT	RL	REAR LEFT
FA	FRONT AXLE	ROW	REST OF WORLD
FCU	FREQUENCY CONVERTER UNIT	RR	REAR RIGHT
FL	FRONT LEFT	SA	SAUDI ARABIA
FOG	FOG LIGHT	SCS	COMBINED STEERING COLUMN SWITCH
FR	FRONT RIGHT	SS	SPEED SENSOR
GP	GROUND POINT	TE	TERMINAL
HCS	HEADLIGHT CLEANING SYSTEM	USA	USA
HF	HIGH FREQUENCY	WL	WIRING LOOM
IC	INSTRUMENT CLUSTER	WP	WELD POINT
LED	LIGHT-EMITTING DIODE	WW	WORLDWIDE
LF	LOW FREQUENCY		
LHD	LEFT-HAND DRIVE		

L M N O P

M - NUMBERS

M 113	CANADA VERSION	M 480	6-RANGE-TRANSMISSION
M 139	SEAT HEATER SEAT LEFT	M 484	USA VERSION
M 150	WITHOUT CATALYZER	M 490	AUDIO OPTION PACK WITHOUT BOOSTER
M 193	JAPAN VERSION	M 553	USA - CANADA VERSION
M 215	SAUDI-ARABIA VERSION	M 562	AIRBAG
M 249	AUTOMATIC TRANSMISSION	M 573	AIR CONDITIONING SYSTEM
M 288	HEADLIGHT CLEANING SYSTEM	M 605	HEADLIGHT VERTICAL AIM CONTROL
M 340	SEAT HEATER SEAT RIGHT	M 650	LIFTING ROOF
M 454	CRUISE CONTROL		

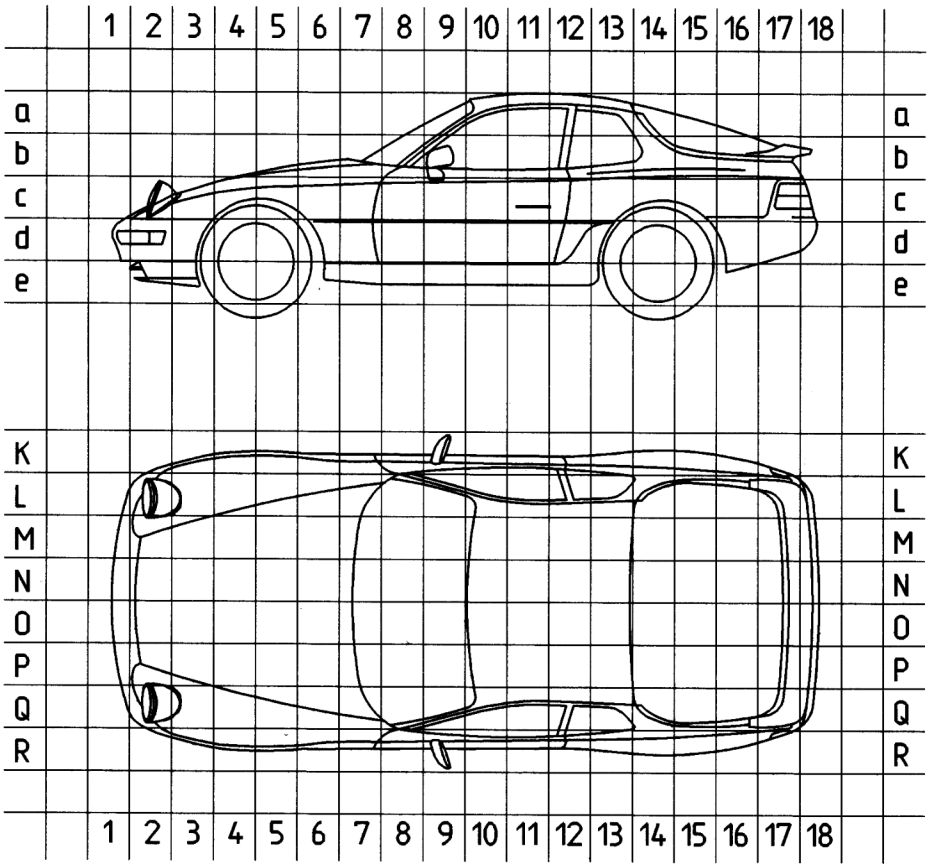

14

L M N O P

WIRING 968 CS

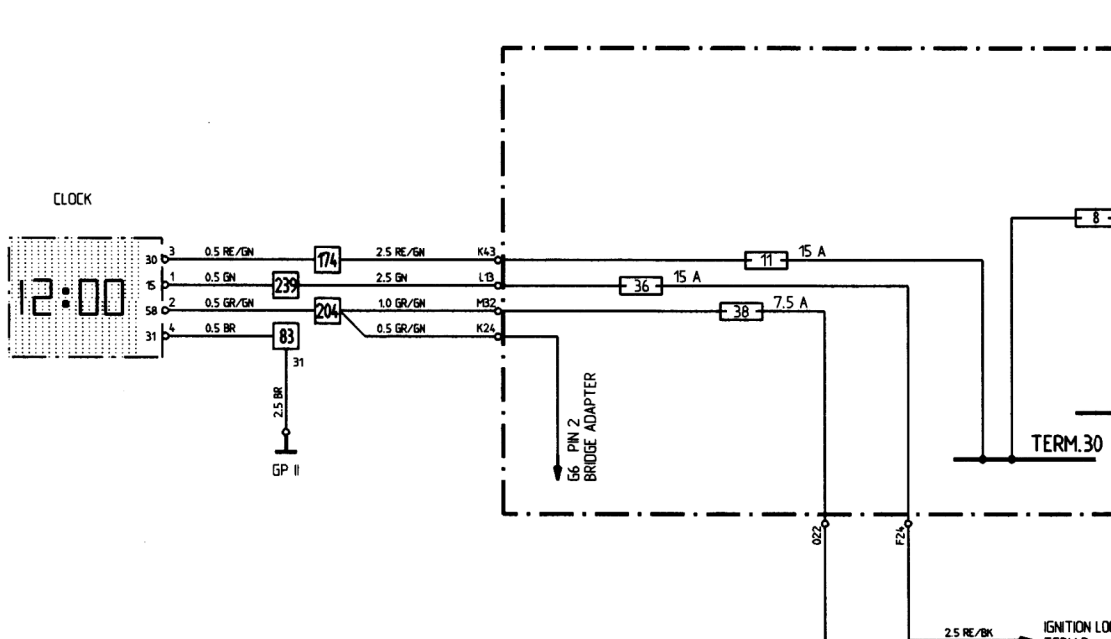

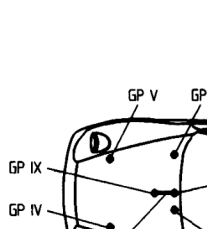

CONNECTING POINT

GP GROUND POINT

NOT WITH MARKED LEADS ARE WIRING LOOM PASSENGER COMPARTMENT

WT =
GN =

Printed in Germany - VII, 1992

F G H J K

DOOR CONTACT SWITCH PASSENGER'S SIDE

DOOR CONTACT SWITCH DRIVER'S SIDE

0.5 BR/GN

273

0.5 BR/GN

80 31

ONLY CS

6.0 BR

0.5 BR

0.5 BR/GN

GP III

INSIDE LIGHTS

ONLY CS WITHOUT SYSTEM ALARME AND CENTRAL LOCKING SYSTEM

CENTRAL ELECTRIC

8 15 A

B32 1.0 RE/YE 302 0.5 RE/YE

CONTROL UNIT AIRBAG

T41

6

G24 0.5 BK/WT M562 3 0.5 BK/WT 12 PLUG 1

4 0.5 BK/RE 11 TERM.15

MFI + DI RELAY TERM.86

TERM.15

CONNECTION AIRBAG

LHD WL AIRBAG

RHD WL PASSENGER COMP.

ONLY CS

0.5 BK

T1

CONTROL UNIT MFI+DI

14

1

7 0.75 BK 27 TERM.15

CONNECTION MFI+DI

WL MFI + DI

GP VI

GP X

GP I

GP VII

GP II

GP VIII

15

F G H J K

WT = WHITE YE = YELLOW RE = RED VI = VIOLET BL = BLUE

GN = GREEN GR = GREY BR = BROWN BK = BLACK

Wiring Diagram Type 968
Model 94

	Coordinates	
Sheet 1	1 - 10	Lights
Sheet 2	11 - 20	Instrument Cluster and Sensor
Sheet 3	21 - 30	Heating, Airconditioning, Ventilating, Power Seats, Wipe- and Wash Cleaners
Sheet 4	31 - 40	Two-Tone Horns, Mirrors, Lifting Roof, Power Window Regulator, Tailgate Unlocking
Sheet 5	41 - 50	Engine Compartment, Cruise Control
Sheet 6	51 - 60	Central Electric
Sheet 7	61 - 70	Central Locks, Alarm System
Sheet 8	71 - 80	Fog Light, Rear Fog Light
Sheet 9	81 - 90	Radio
Sheet 9 a	81 - 90	Radio CS, Sound Package Cabriolet
Sheet 10	91 - 100	ABS, Airbag
Sheet 11	101 - 110	Wiring 968 Cabriolet
Sheet 12	111 - 120	Tiptronic
Sheet 13		Construction Components
Sheet 14		Plug Connections, Ground Points, M-Numbers, Abbreviations

USA: For vehicules with V.I.N.s from WPO AA2 96 RS 82 0061 to WPO AA2 96 RS 82 0221 and from WPO AA2 96 RS 84 0061 to WPO AA2 96 RS 84 0249 use the wiring diagram model 93.

Wiring Diagram Type 968
Model 94

The wiring diagram consists of 13 individual wiring diagrams, 1 sheet construction components and 1 sheet plug connections and ground points. These are divided into coordinate fields.

Each individual wiring diagram contains a part of the central-electrics box in a dashdotted frame.

This part of the central-electrics box shows all the lines and relays necessary for the individual wiring diagram.

The earth/ground points are identified by "GP" and their location is shown in a vehicle diagram.

The 20-pin connectors on the central-electrics box are clipped together out of 5 parts.

Part 1, with the moduled-on fastening lug, is the "starting element".

Parts 2, 3 and 4 are "module elements".

Parts 1 to 4 are identified by the numbers 1.....5.

Part 5 is a "coding element".

The designations of the plug connections in the wiring diagram of the central-electrics box refer to the "starting element" from, for example, B 11.....15, and to the first module element from B 21.....25.

Printed in Germany – X, 1993

968 MODEL 94 SHEET 1

LIGHTS

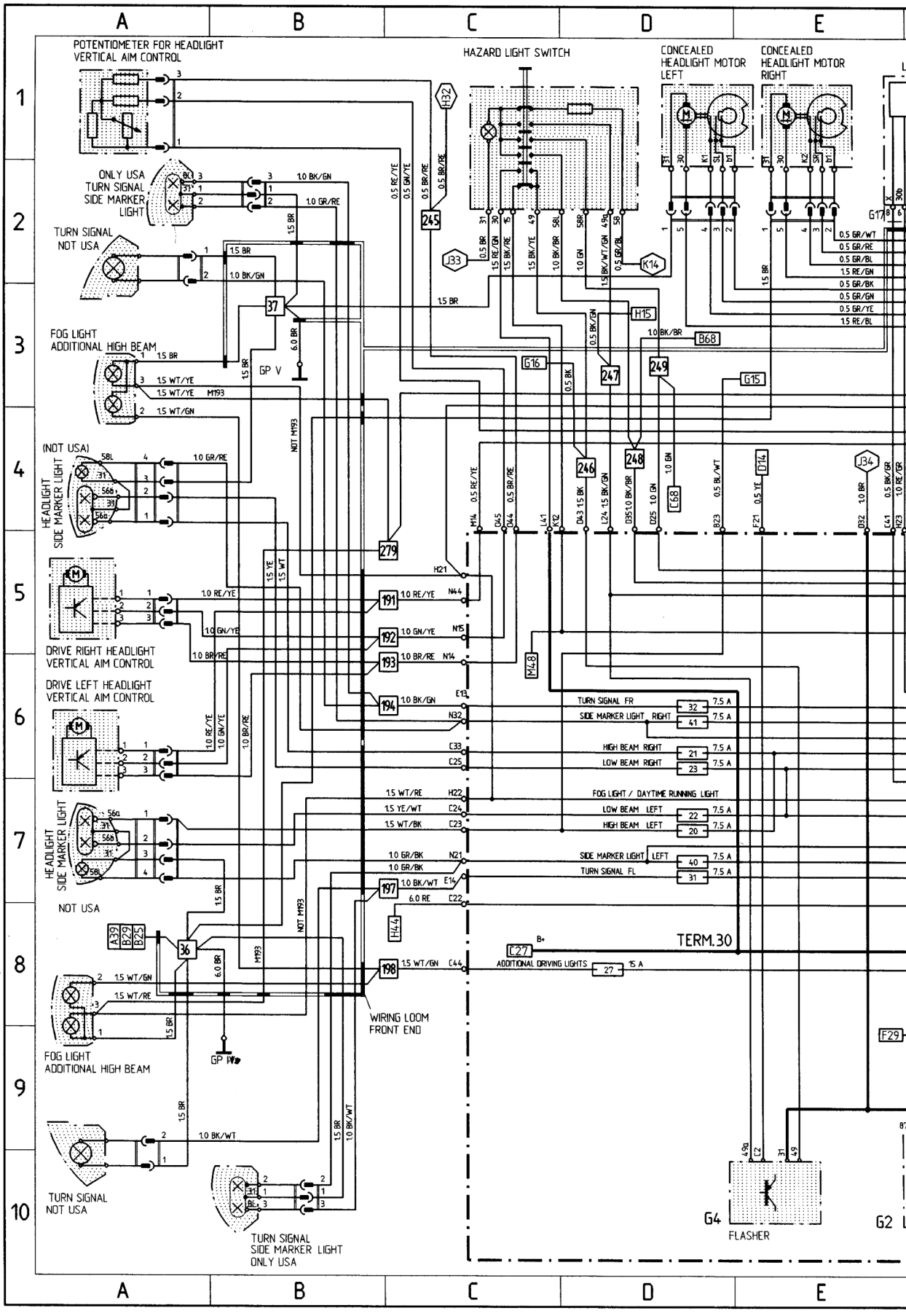

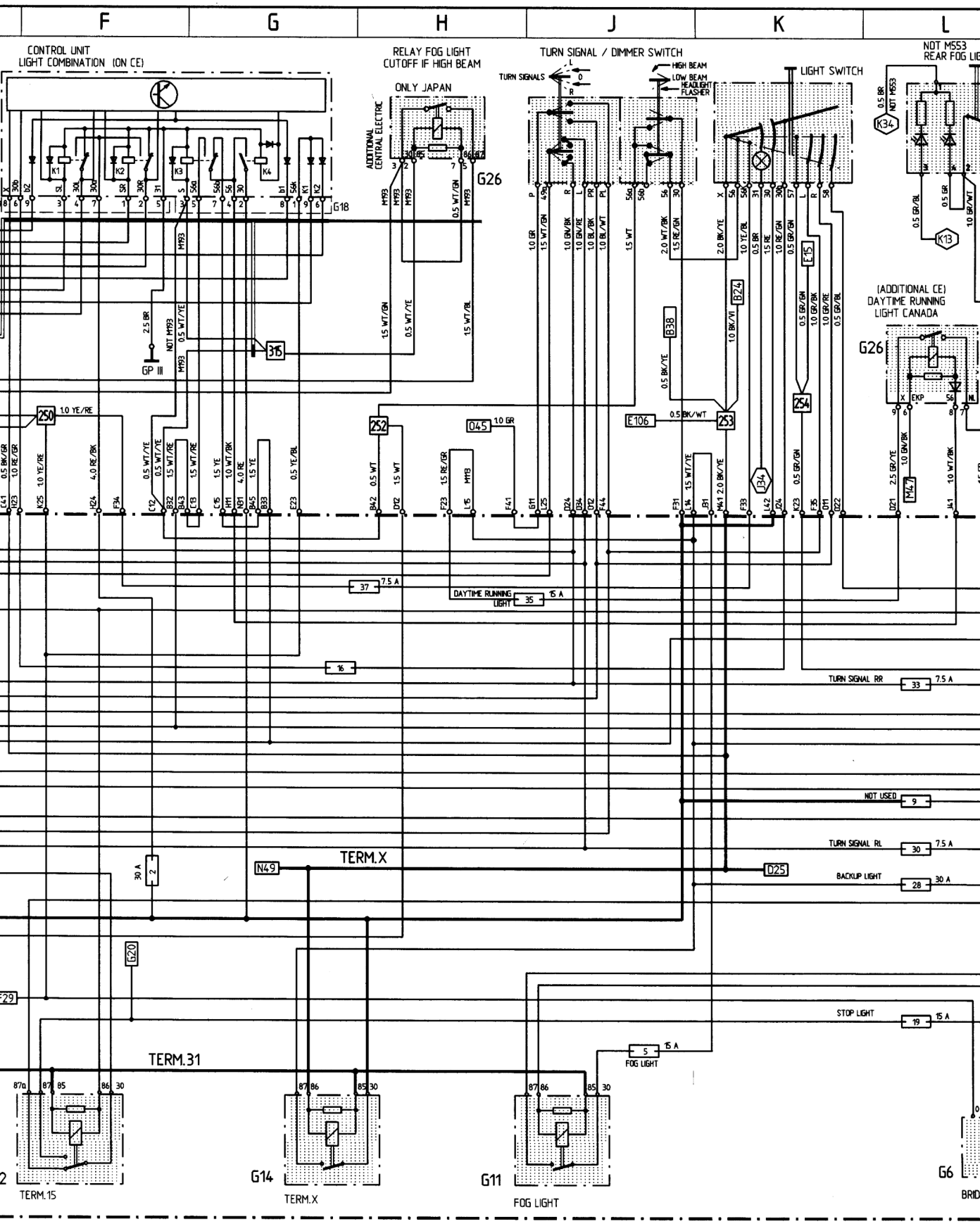

WT = WHITE YE = YELLOW RE = RED VI = VIOLET BL = BLUE GN = GREEN GR = GREY BR = BROWN BK = BLACK

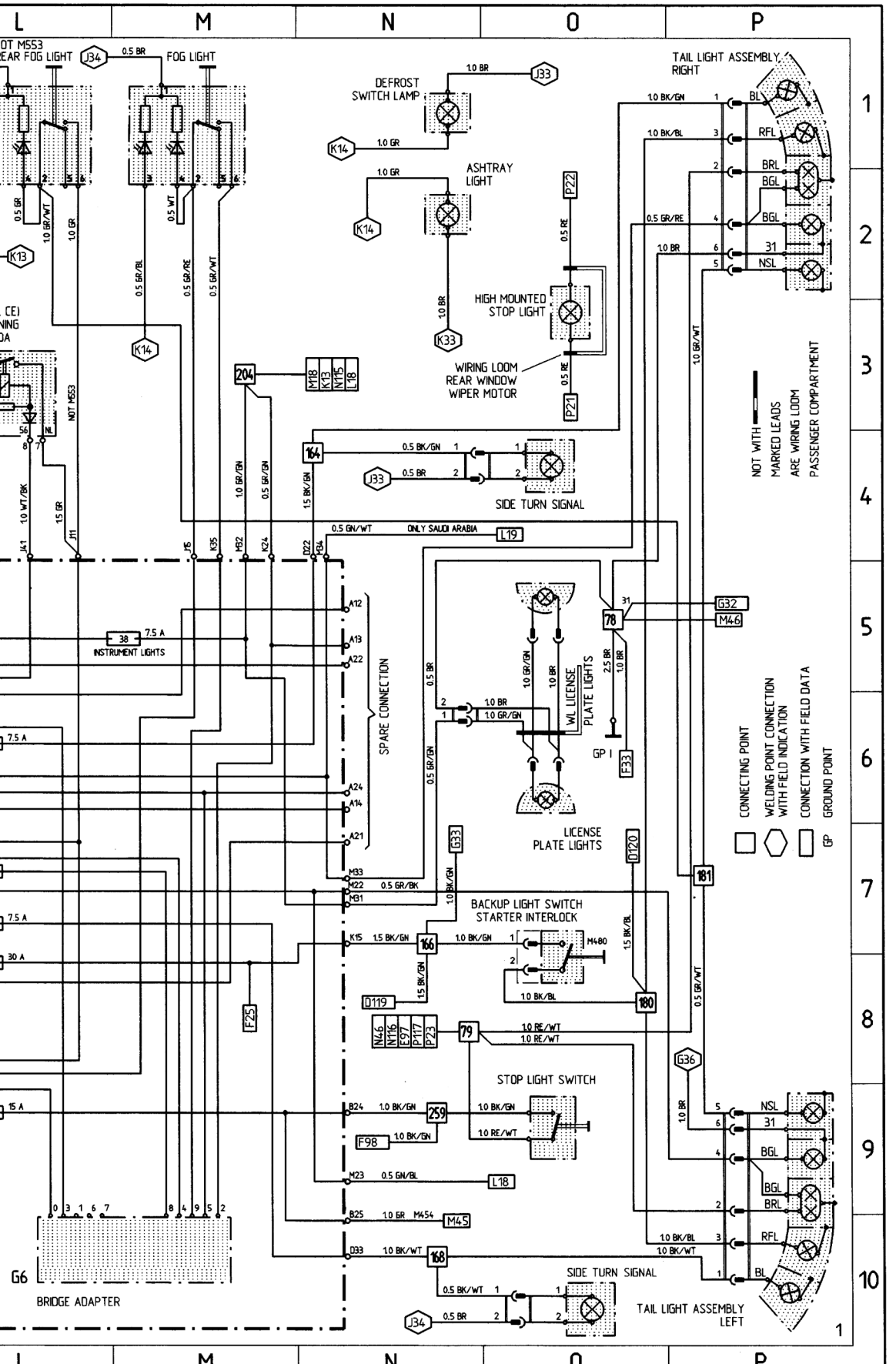
L
M
N
O
P
1
2
3
4
5
6
7
8
9
10
FOG LIGHT
DEFROST SWITCH LAMP
ASHTRAY LIGHT
HIGH MOUNTED STOP LIGHT
WIRING LOOM REAR WINDOW WIPER MOTOR
TAIL LIGHT ASSEMBLY RIGHT
SIDE TURN SIGNAL
ONLY SAUDI ARABIA
INSTRUMENT LIGHTS
SPARE CONNECTION
WL LICENSE PLATE LIGHTS
LICENSE PLATE LIGHTS
GP I
BACKUP LIGHT SWITCH STARTER INTERLOCK
STOP LIGHT SWITCH
SIDE TURN SIGNAL
TAIL LIGHT ASSEMBLY LEFT
BRIDGE ADAPTER
NOT WITH MARKED LEADS ARE WIRING LOOM PASSENGER COMPARTMENT
CONNECTING POINT
WELDING POINT CONNECTION WITH FIELD INDICATION
CONNECTION WITH FIELD DATA
GP GROUND POINT

968 MODEL 94 SHEET 2

INSTRUMENT CLUSTER AND SENSOR

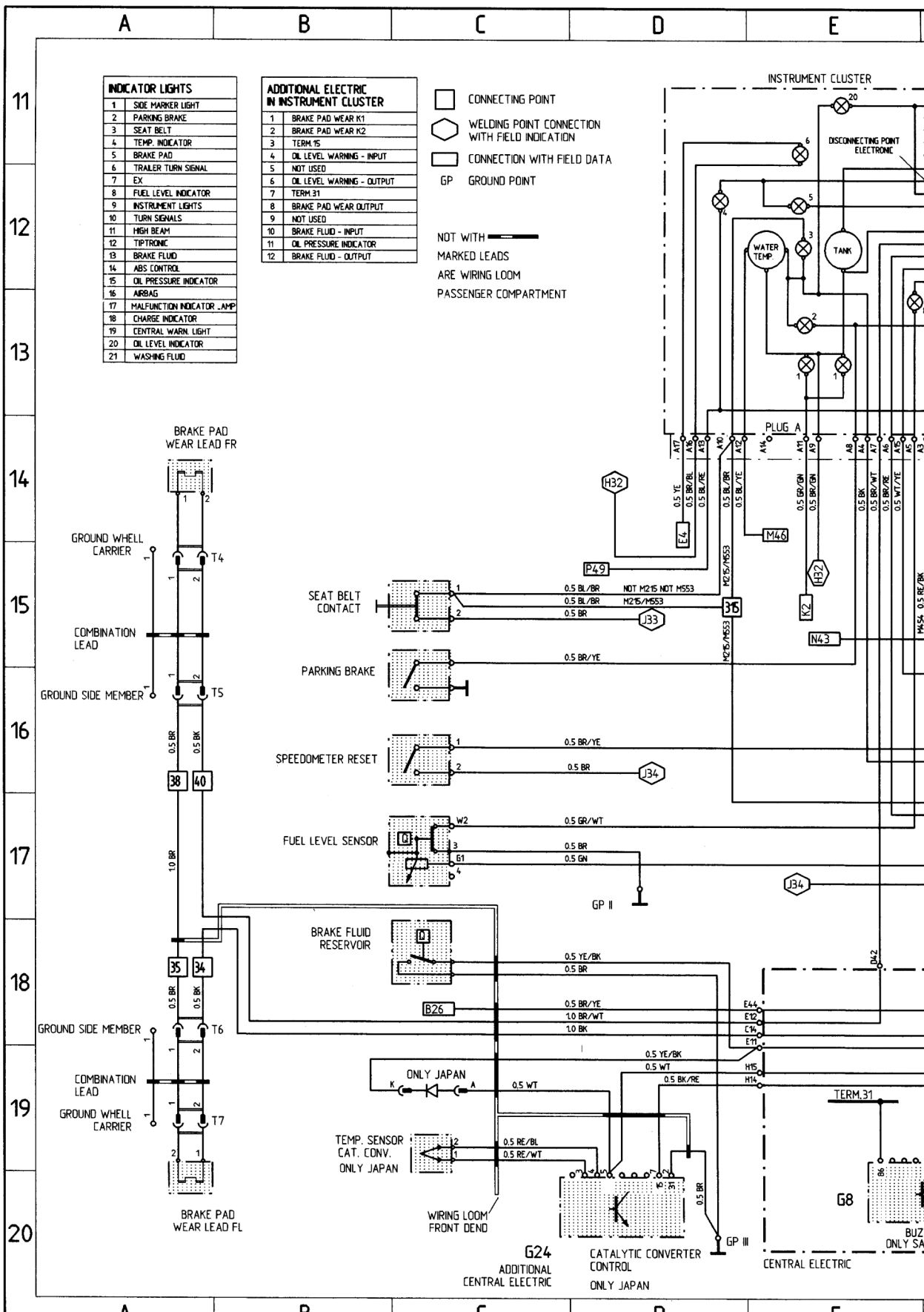

Printed in Germany - X, 1993

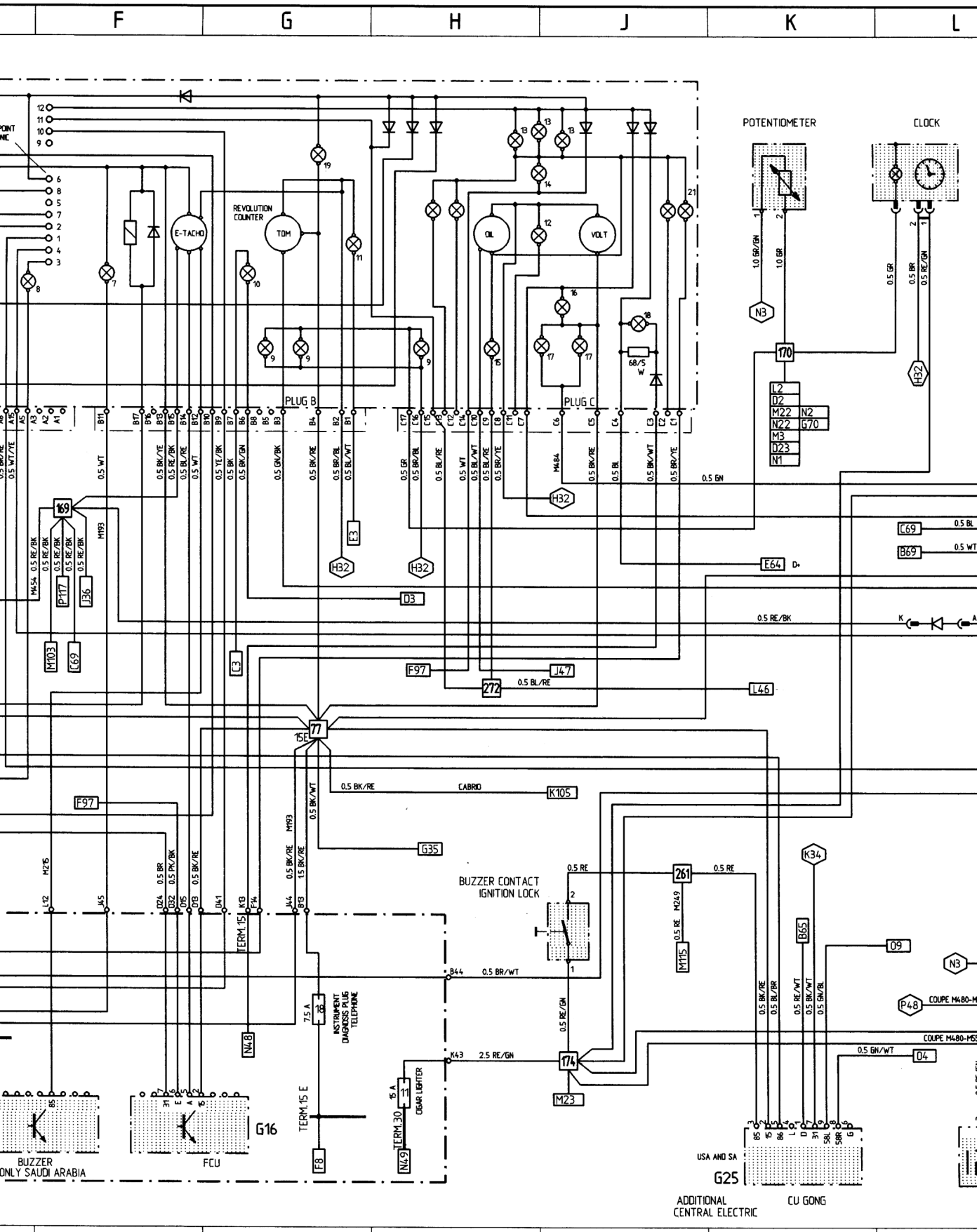
F
G
H
J
K
L
POTENTIOMETER
CLOCK
REVOLUTION COUNTER
E-TACHO
TDM
OIL
VOLT
PLUG B
PLUG C
BUZZER CONTACT IGNITION LOCK
TERM 15
TERM 15 E
TERM 30
BUZZER ONLY SAUDI ARABIA
FCU
G16
G25
ADDITIONAL CENTRAL ELECTRIC
CU GONG
INSTRUMENT DIAGNOSIS PLUG TELEPHONE
CIGAR LIGHTER
CABRIO
COUPE M480-M
USA AND SA
WT = WHITE
YE = YELLOW
RE = RED
VI = VIOLET
BL = BLUE
GN = GREEN
GR = GREY
BR = BROWN
BK = BLACK

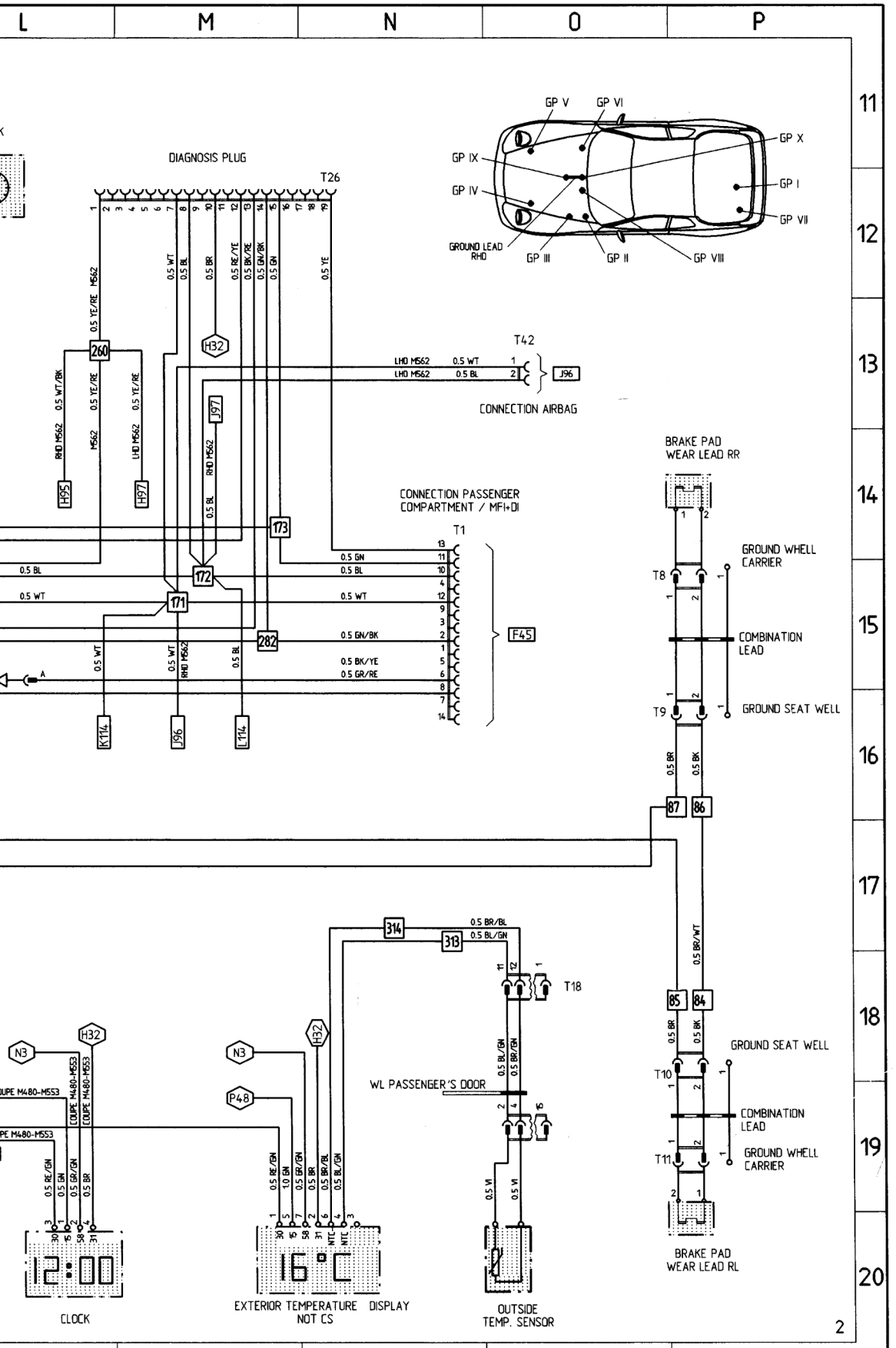
L
M
N
O
P
11
12
13
14
15
16
17
18
19
20
GP V
GP VI
GP X
GP IX
GP I
GP IV
GP VII
GROUND LEAD RHD
GP III
GP II
GP VIII
DIAGNOSIS PLUG
T26
H32
260
H95
H97
J97
173
172
171
282
K114
J96
L114
F45
T1
T42
J96
CONNECTION AIRBAG
CONNECTION PASSENGER COMPARTMENT / MFI+DI
BRAKE PAD WEAR LEAD RR
GROUND WHELL CARRIER
T8
COMBINATION LEAD
T9
GROUND SEAT WELL
87
86
85
84
T10
T11
BRAKE PAD WEAR LEAD RL
314
313
T18
WL PASSENGER'S DOOR
N3
P48
12:00
CLOCK
16°C
EXTERIOR TEMPERATURE DISPLAY NOT CS
OUTSIDE TEMP. SENSOR
2

968 MODEL 94 SHEET 3

HEATING, AIR CONDITIONING, VENTILATING, POWER SEATS, WIPE- AND WASH CLEANERS

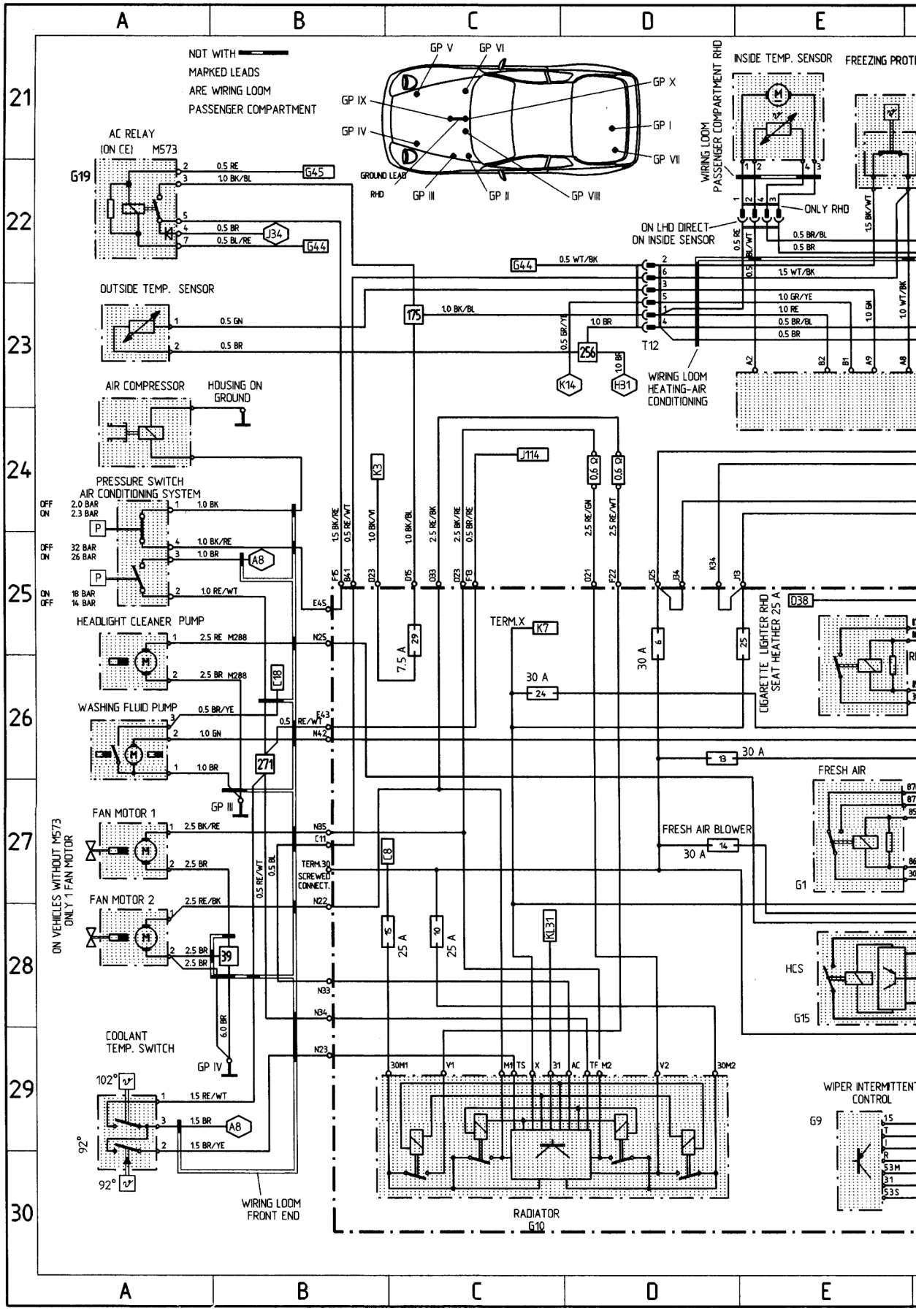

Printed in Germany - X, 1993

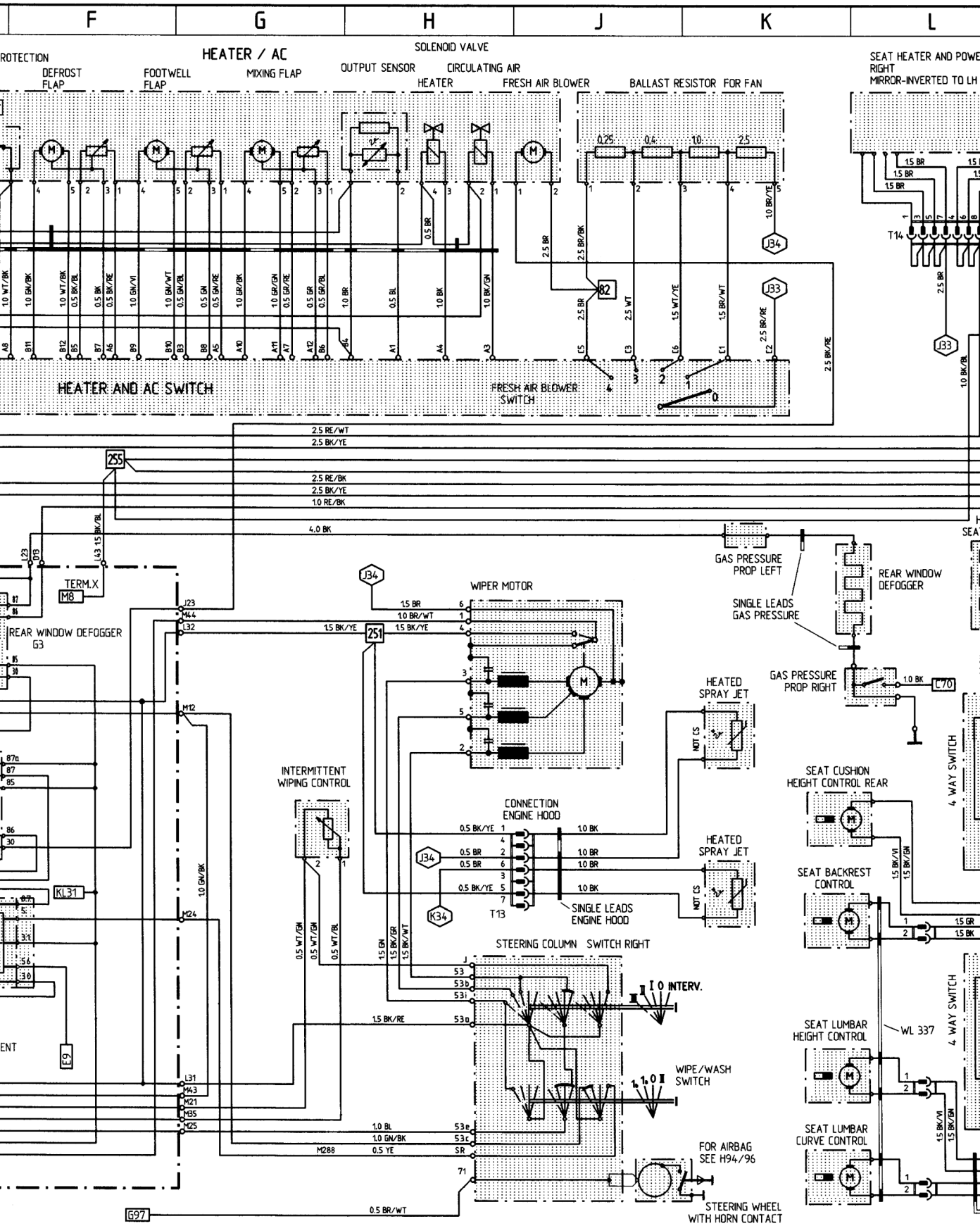

WT = WHITE YE = YELLOW RE = RED VI = VIOLET BL = BLUE GN = GREEN GR = GREY BR = BROWN BK = BLACK

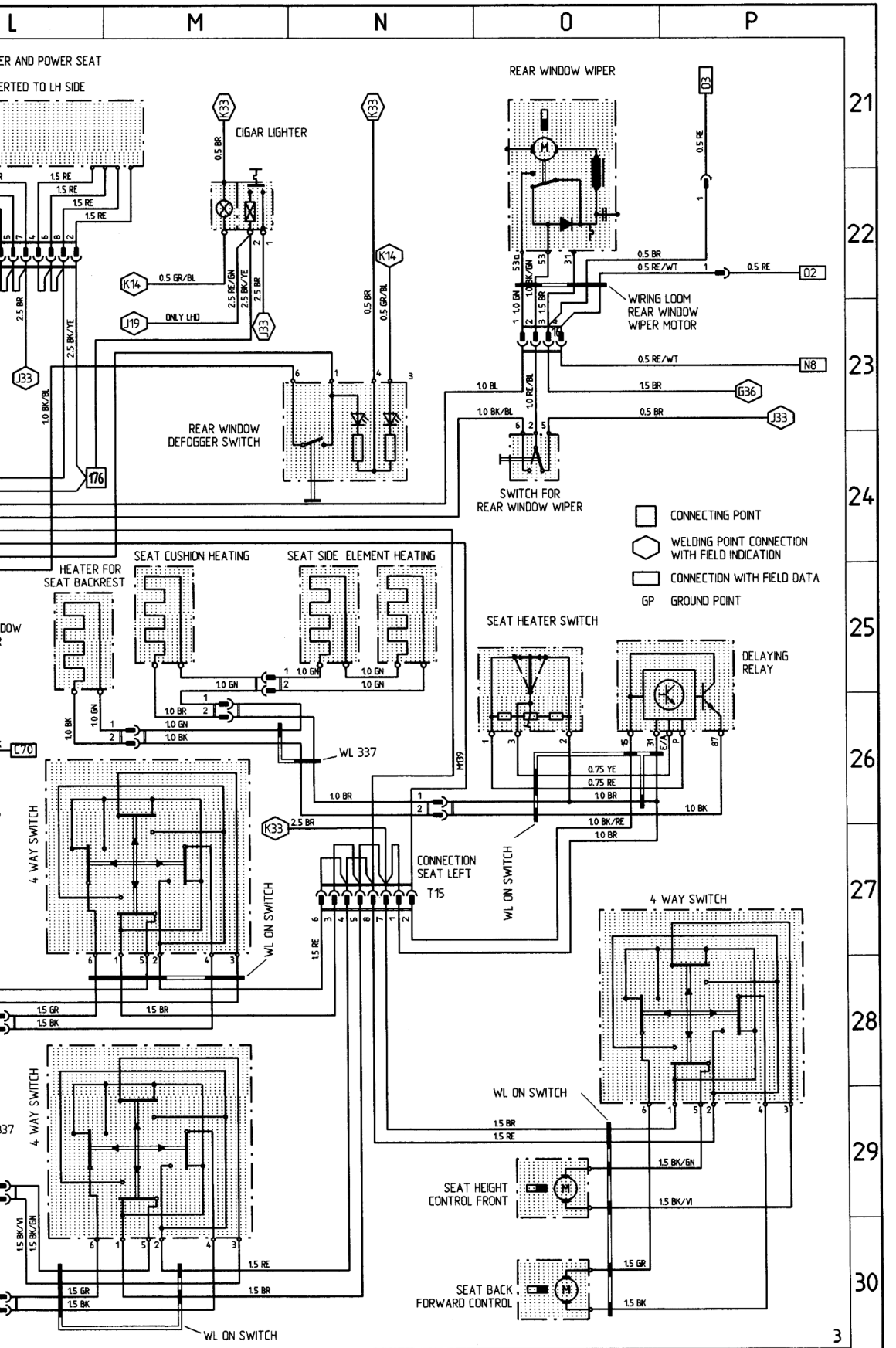
L
M
N
O
P
21
22
23
24
25
26
27
28
29
30
ER AND POWER SEAT
ERTED TO LH SIDE
CIGAR LIGHTER
REAR WINDOW WIPER
WIRING LOOM REAR WINDOW WIPER MOTOR
REAR WINDOW DEFOGGER SWITCH
SWITCH FOR REAR WINDOW WIPER
ONLY LHD
CONNECTING POINT
WELDING POINT CONNECTION WITH FIELD INDICATION
CONNECTION WITH FIELD DATA
GP GROUND POINT
HEATER FOR SEAT BACKREST
SEAT CUSHION HEATING
SEAT SIDE ELEMENT HEATING
SEAT HEATER SWITCH
DELAYING RELAY
WL 337
CONNECTION SEAT LEFT
T15
WL ON SWITCH
4 WAY SWITCH
SEAT HEIGHT CONTROL FRONT
SEAT BACK FORWARD CONTROL
3

TWO-TONE HORNS, MIRRORS, LIFTING ROOF, POWER WINDOW REGULATOR, TAILGATE UNLOCKING

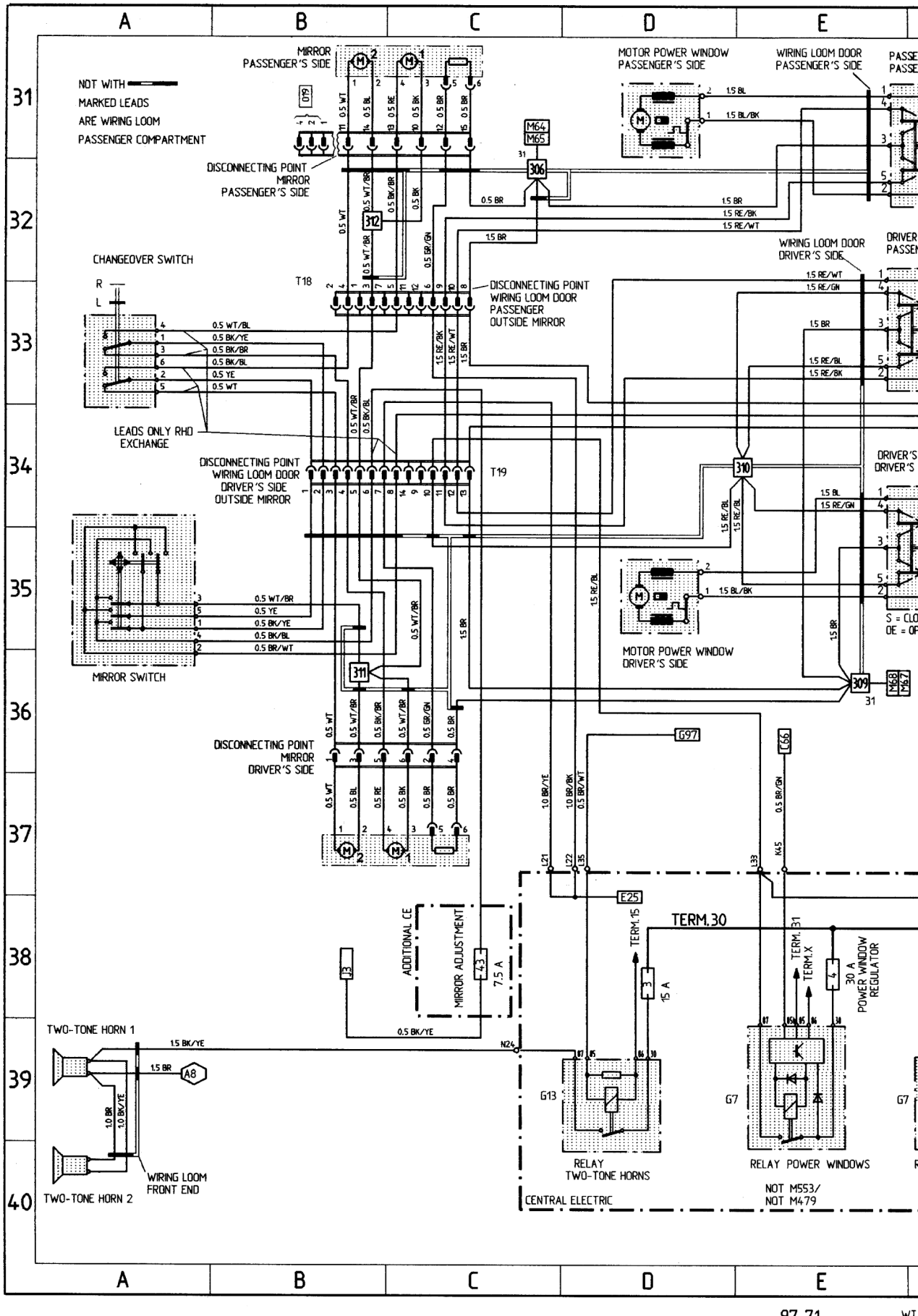

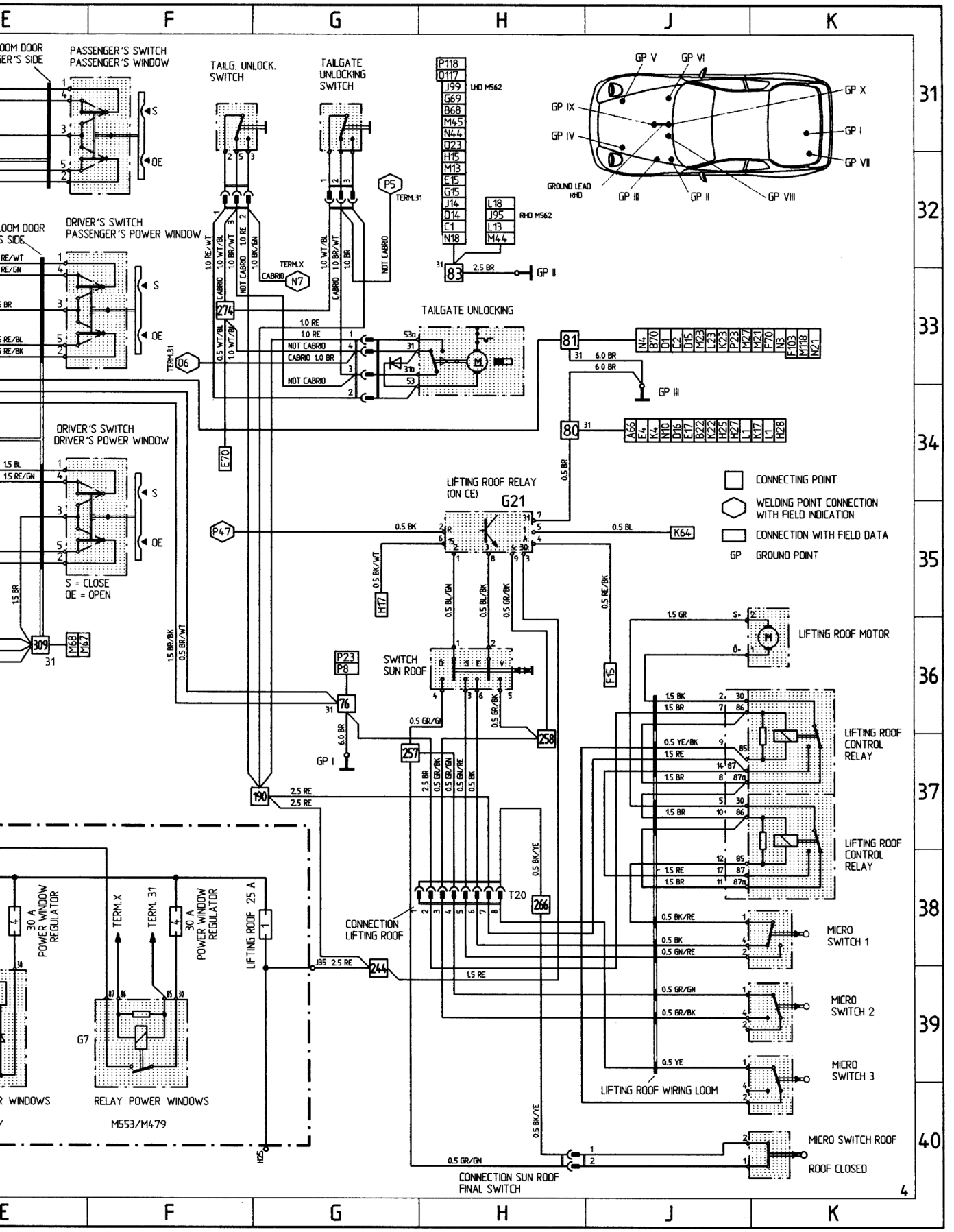

WT = WHITE
GN = GREEN
YE = YELLOW
GR = GREY
RE = RED
BR = BROWN
VI = VIOLET
BK = BLACK
BL = BLUE

968 MODEL 94 SHEET 5

ENGINE COMPARTMENT, CRUISE CONTROL

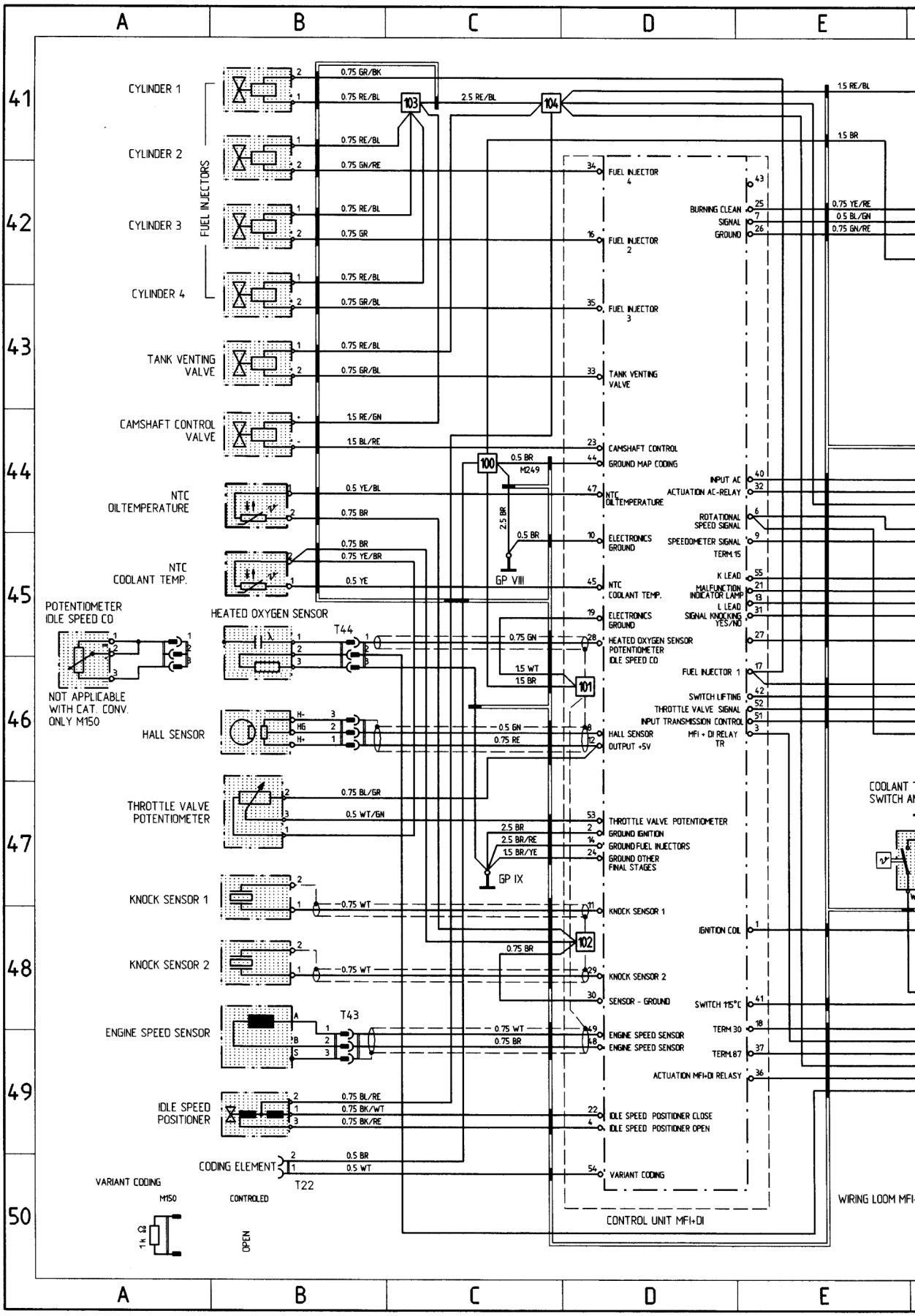

Printed in Germany - X, 1993

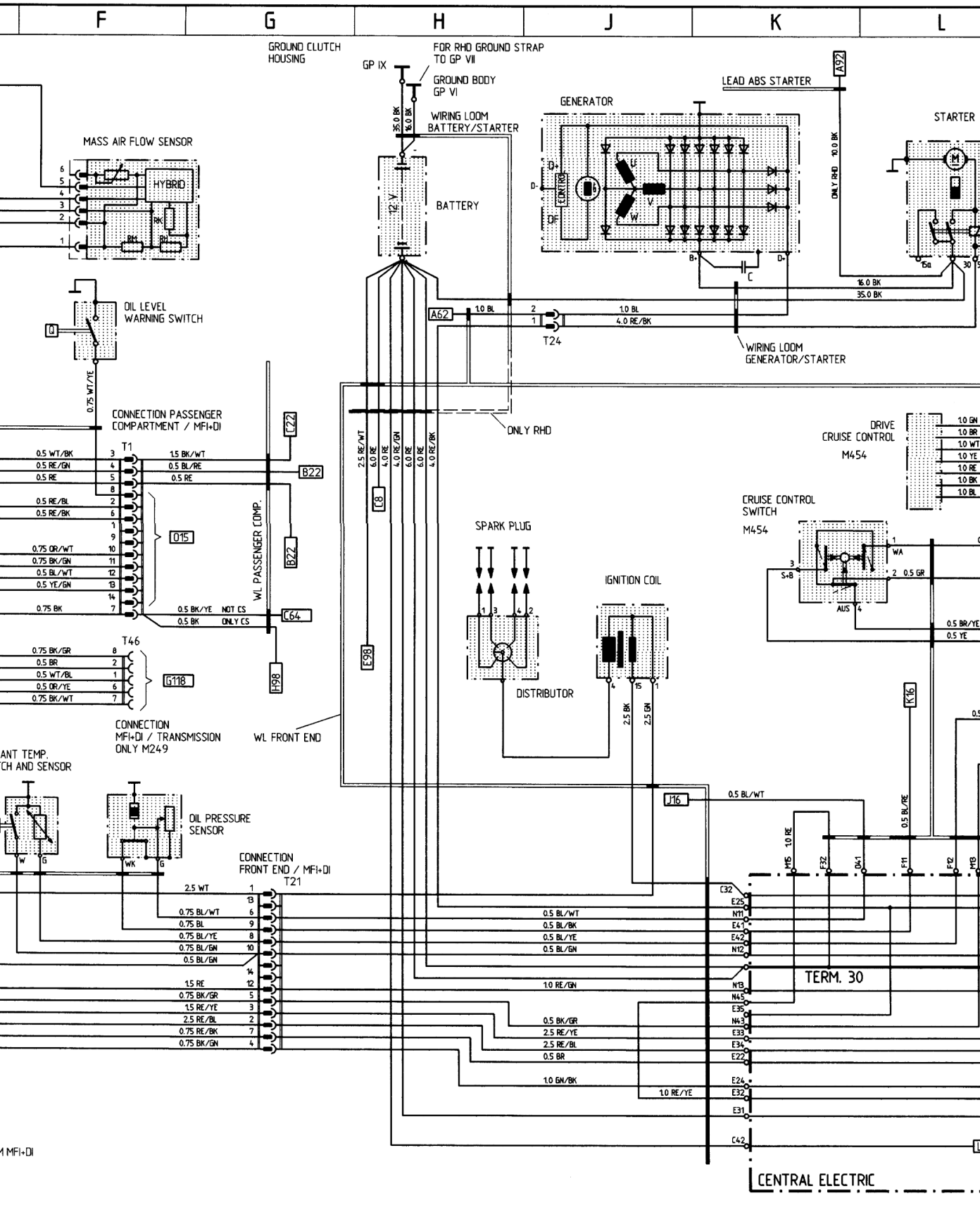
F
G
H
J
K
L
GROUND CLUTCH HOUSING
GP IX
FOR RHD GROUND STRAP TO GP VII
GROUND BODY GP VI
WIRING LOOM BATTERY/STARTER
35.0 BK
16.0 BK
12 V
BATTERY
GENERATOR
LEAD ABS STARTER
A92
STARTER
ONLY RHD
10.0 BK
16.0 BK
35.0 BK
MASS AIR FLOW SENSOR
HYBRID
OIL LEVEL WARNING SWITCH
A62
1.0 BL
4.0 RE/BK
T24
WIRING LOOM GENERATOR/STARTER
0.75 WT/YE
CONNECTION PASSENGER COMPARTMENT / MFI+DI
T1
C22
B22
C8
E98
H98
WL PASSENGER COMP.
WL FRONT END
ONLY RHD
DRIVE CRUISE CONTROL
M454
CRUISE CONTROL SWITCH
M454
SPARK PLUG
IGNITION COIL
DISTRIBUTOR
2.5 BK
2.5 GN
K16
J16
0.5 BL/WT
0.5 BL/RE
1.0 RE
TERM. 30
C32
E25
N71
E41
E42
N12
N13
N45
E35
N43
E39
E34
E22
E24
E32
E31
C42
CENTRAL ELECTRIC
O15
C64
T46
G118
CONNECTION MFI+DI / TRANSMISSION ONLY M249
OIL PRESSURE SENSOR
CONNECTION FRONT END / MFI+DI
T21
ANT TEMP.
CH AND SENSOR
M MFI+DI
WT = WHITE
YE = YELLOW
RE = RED
VI = VIOLET
BL = BLUE
GN = GREEN
GR = GREY
BR = BROWN
BK = BLACK

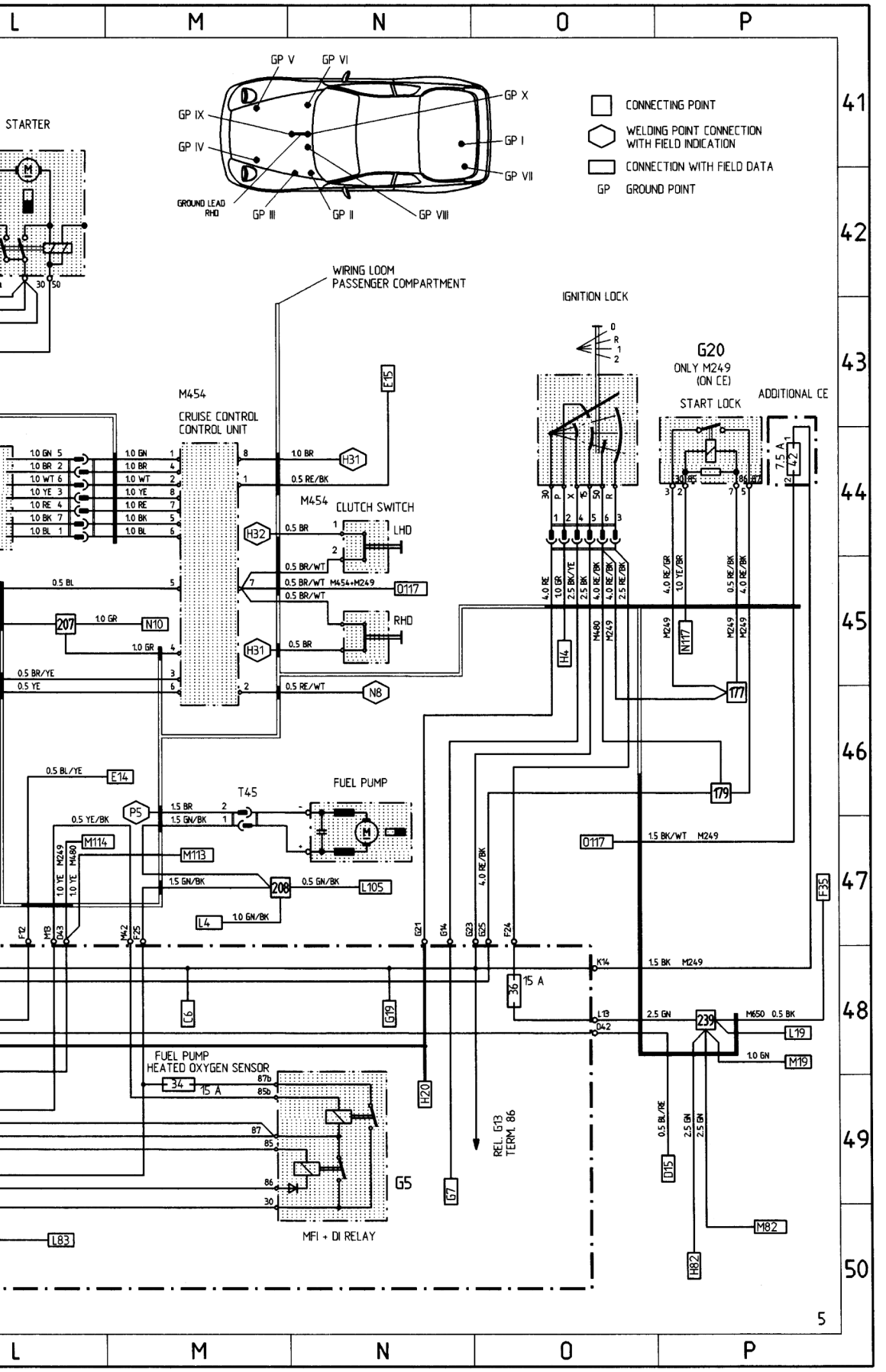
L
M
N
O
P
41
42
43
44
45
46
47
48
49
50
STARTER
GP V
GP VI
GP IX
GP IV
GP X
GP I
GP VII
GROUND LEAD RHD
GP III
GP II
GP VIII
CONNECTING POINT
WELDING POINT CONNECTION WITH FIELD INDICATION
CONNECTION WITH FIELD DATA
GP GROUND POINT
WIRING LOOM PASSENGER COMPARTMENT
IGNITION LOCK
G20
ONLY M249 (ON CE)
START LOCK
ADDITIONAL CE
M454
CRUISE CONTROL CONTROL UNIT
M454 CLUTCH SWITCH
LHD
RHD
T45
FUEL PUMP
FUEL PUMP HEATED OXYGEN SENSOR
MFI + DI RELAY
REL. G13 TERM. 86
15 A
7.5 A
1.5 BK/WT M249
1.5 BK M249
2.5 GN
M650 0.5 BK
1.0 GN
0.5 BL/YE
0.5 YE/BK
1.5 GN/BK
0.5 GN/BK
1.0 GN/BK
0.5 BR/YE
0.5 YE
0.5 BL
1.0 GR
0.5 BR
0.5 RE/BK
0.5 RE/WT
0.5 BR/WT
4.0 RE
4.0 RE/BK
2.5 BK/YE
2.5 BK
2.5 RE/BK
1.0 YE/BR
0.5 RE/BK
0.5 BL/RE
2.5 GN
1.0 GN
1.0 BR
1.0 WT
1.0 YE
1.0 RE
1.0 BK
1.0 BL
1.5 BR
1.5 GN/BK
1.0 YE M249
1.0 YE M490
4.0 RE/BK
2.5 GN
0.5 BK
0.5 BR
0.5 BR/WT
0.5 RE/BK
0.5 RE/WT
1.0 GR
1.0 GN
1.0 BR
1.0 WT
1.0 YE
1.0 RE
1.0 BK
1.0 BL
M490
M249
M454+M249
E15
E14
P5
M114
M113
208
L105
L4
L6
G19
H20
G7
G5
L83
M82
H82
D15
L19
M19
F35
F12
M13
D43
M42
F25
G21
G14
G23
G25
F24
K14
L13
042
207
N10
H31
H32
H4
N8
N117
177
179
0117
L105
M249
M490
5

CENTRAL ELECTRIC

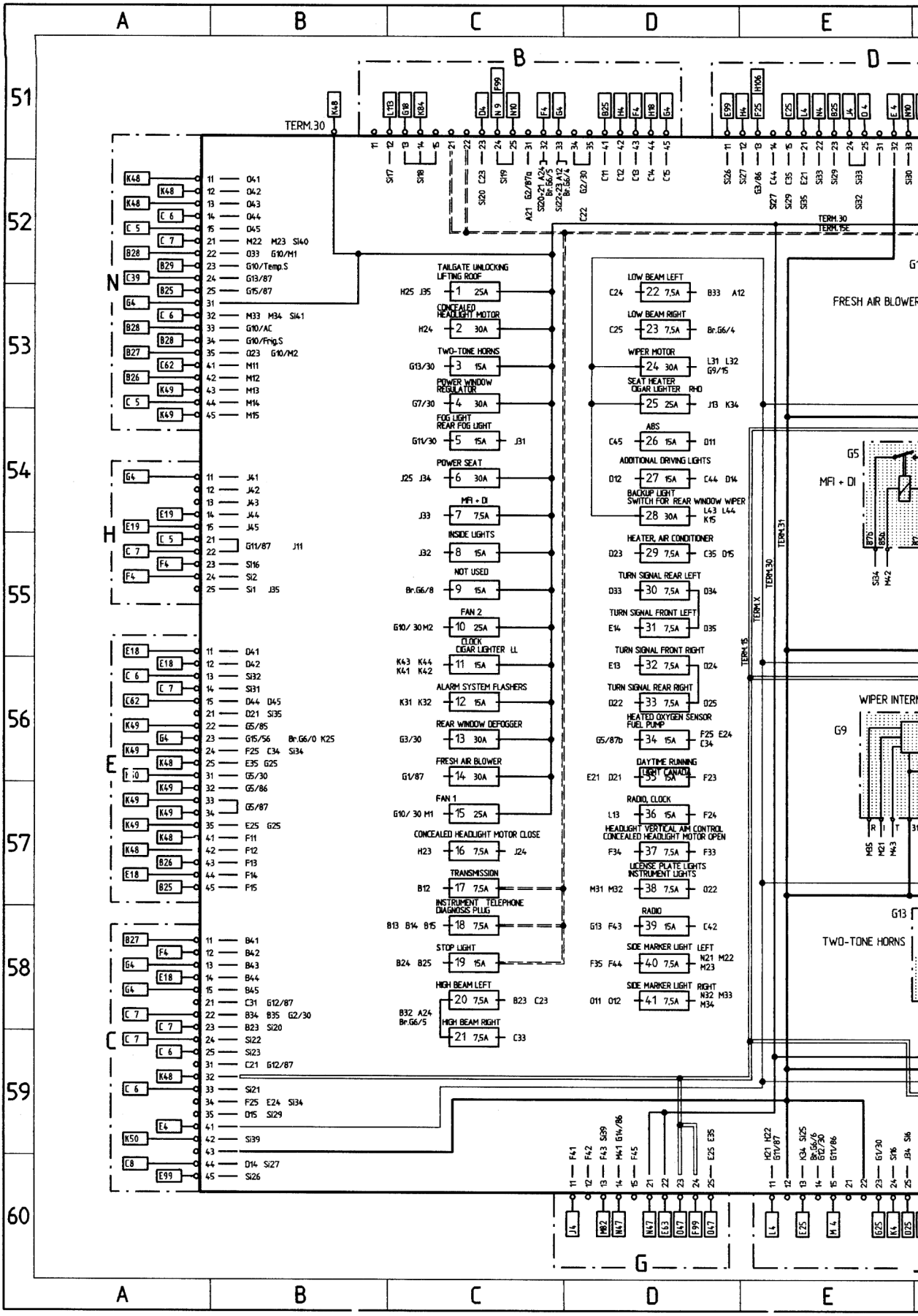

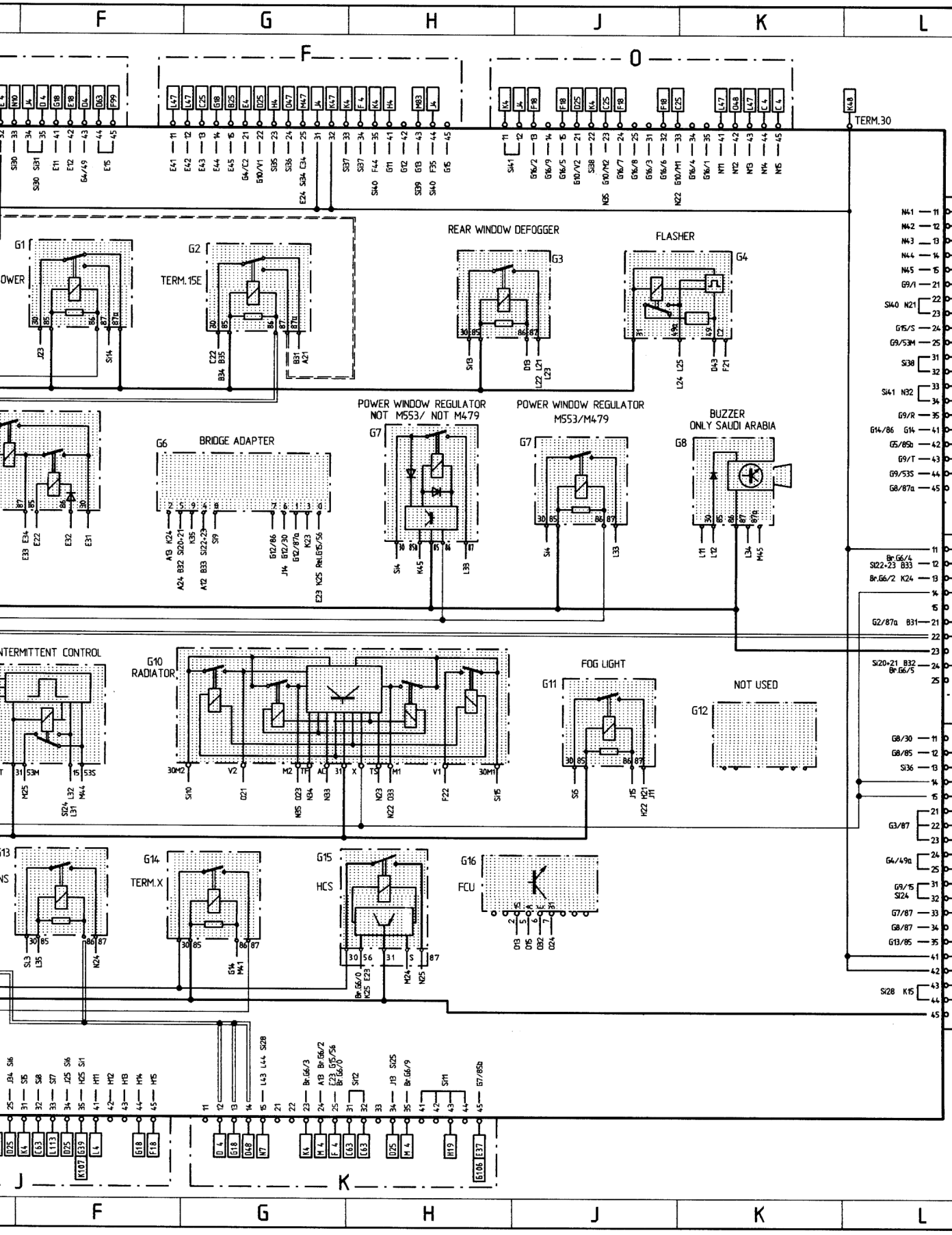
F
G
H
J
K
L
TERM.30
G1
G2
TERM.15E
REAR WINDOW DEFOGGER
G3
FLASHER
G4
G6
BRIDGE ADAPTER
POWER WINDOW REGULATOR
NOT M553/ NOT M479
G7
POWER WINDOW REGULATOR
M553/M479
BUZZER
ONLY SAUDI ARABIA
G8
INTERMITTENT CONTROL
G10
RADIATOR
FOG LIGHT
G11
NOT USED
G12
G13
G14
TERM.X
G15
HCS
G16
FCU

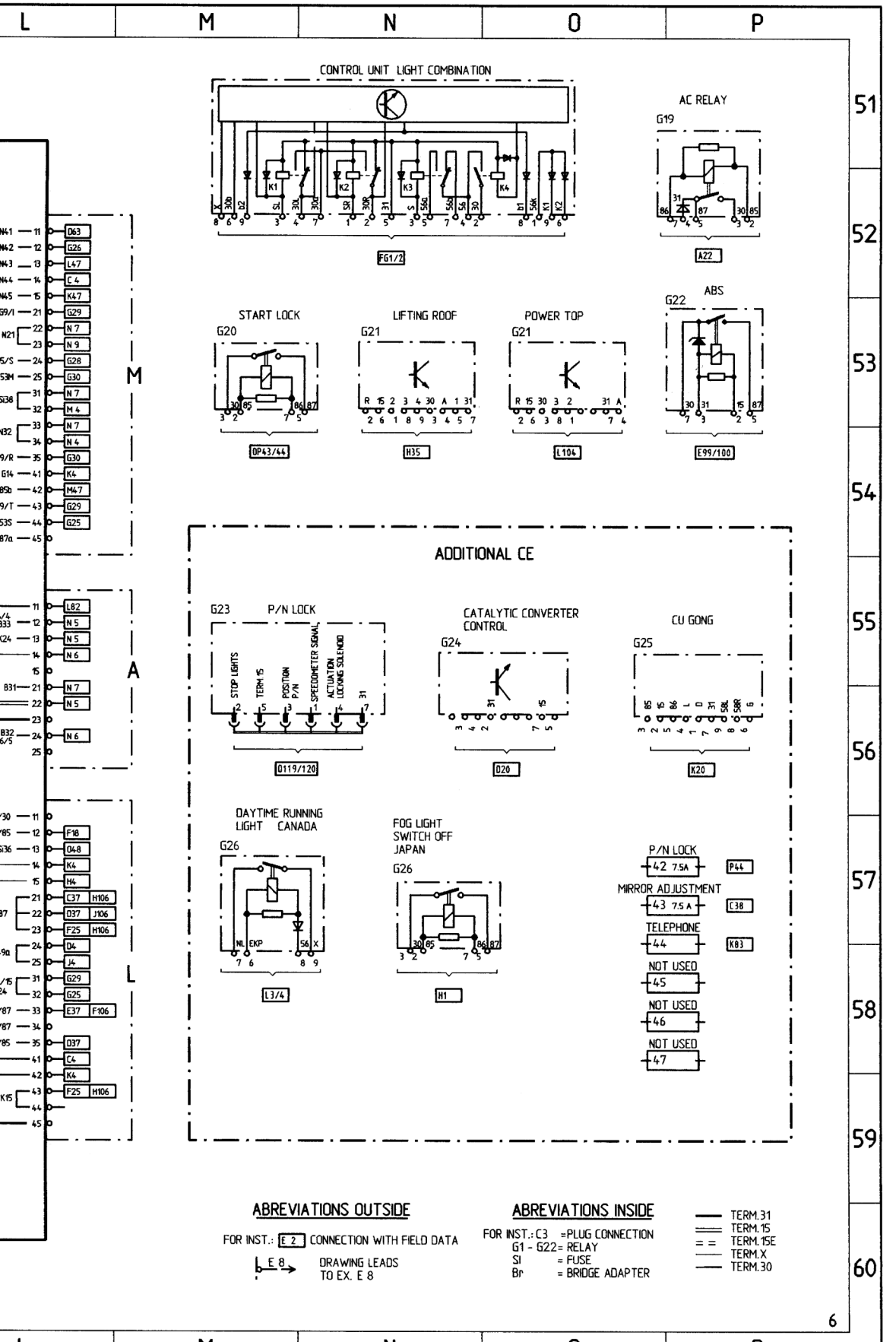
L
M
N
O
P
51
52
53
54
55
56
57
58
59
60
CONTROL UNIT LIGHT COMBINATION
FG1/2
AC RELAY
G19
A22
START LOCK
G20
OP43/44
LIFTING ROOF
G21
H35
POWER TOP
G21
L104
ABS
G22
E99/100
ADDITIONAL CE
G23 P/N LOCK
STOP LIGHTS
TERM 15
POSITION P/N
SPEEDOMETER SIGNAL
ACTUATION LOCKING SOLENOID
D119/120
CATALYTIC CONVERTER CONTROL
G24
D20
CU GONG
G25
K20
DAYTIME RUNNING LIGHT CANADA
G26
L3/4
FOG LIGHT SWITCH OFF JAPAN
G26
H1
P/N LOCK
42 7.5A
P44
MIRROR ADJUSTMENT
43 7.5 A
C38
TELEPHONE
44
K83
NOT USED
45
NOT USED
46
NOT USED
47
ABREVIATIONS OUTSIDE
FOR INST.: E 2 CONNECTION WITH FIELD DATA
E 8 DRAWING LEADS TO EX. E 8
ABREVIATIONS INSIDE
FOR INST.: C3 =PLUG CONNECTION
G1 - G22= RELAY
SI = FUSE
Br = BRIDGE ADAPTER
TERM.31
TERM.15
TERM.15E
TERM.X
TERM.30
6

968 MODEL 94 SHEET 7

CENTRAL LOCKS, ALARM SYSTEM

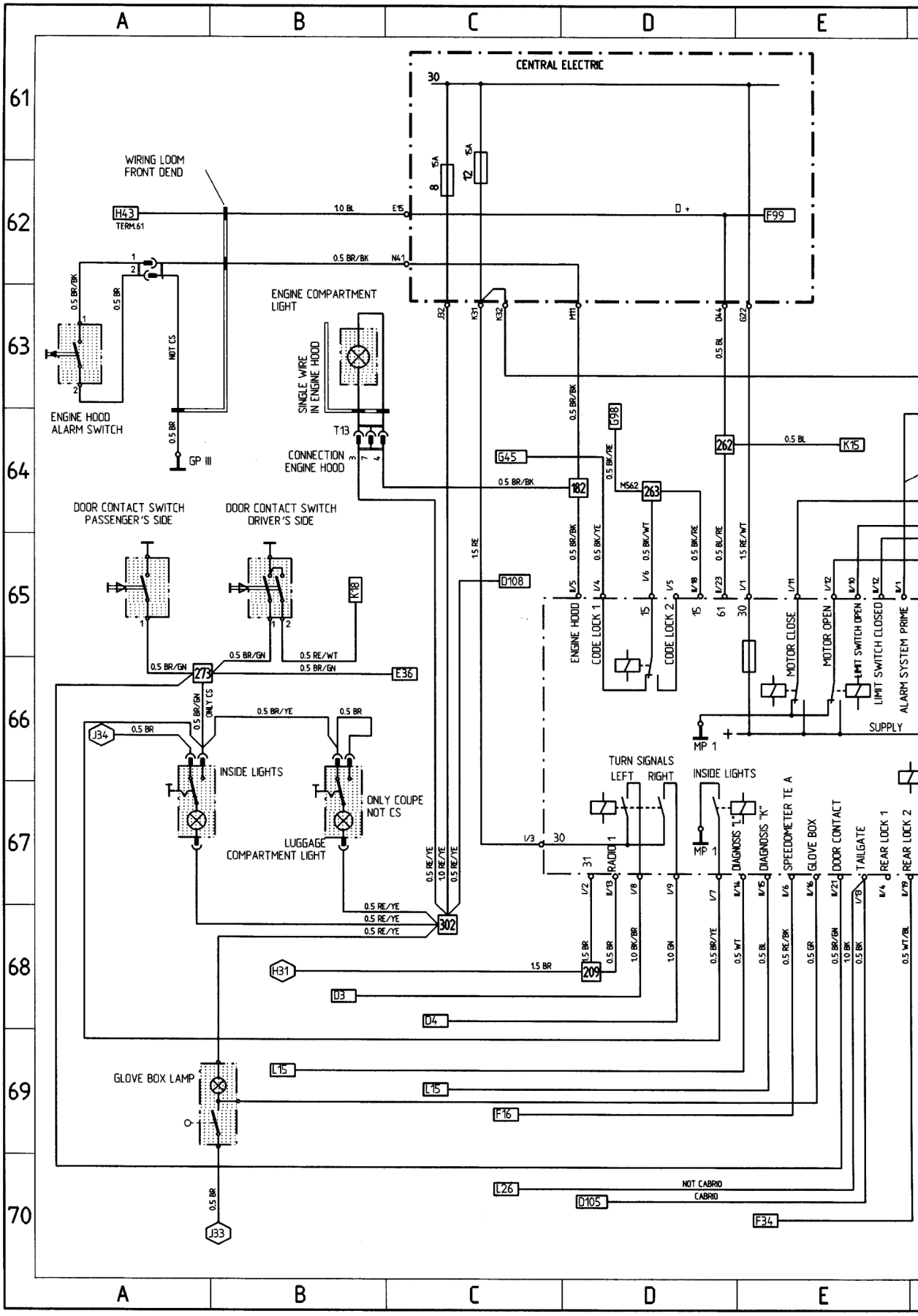

Printed in Germany - X, 1993

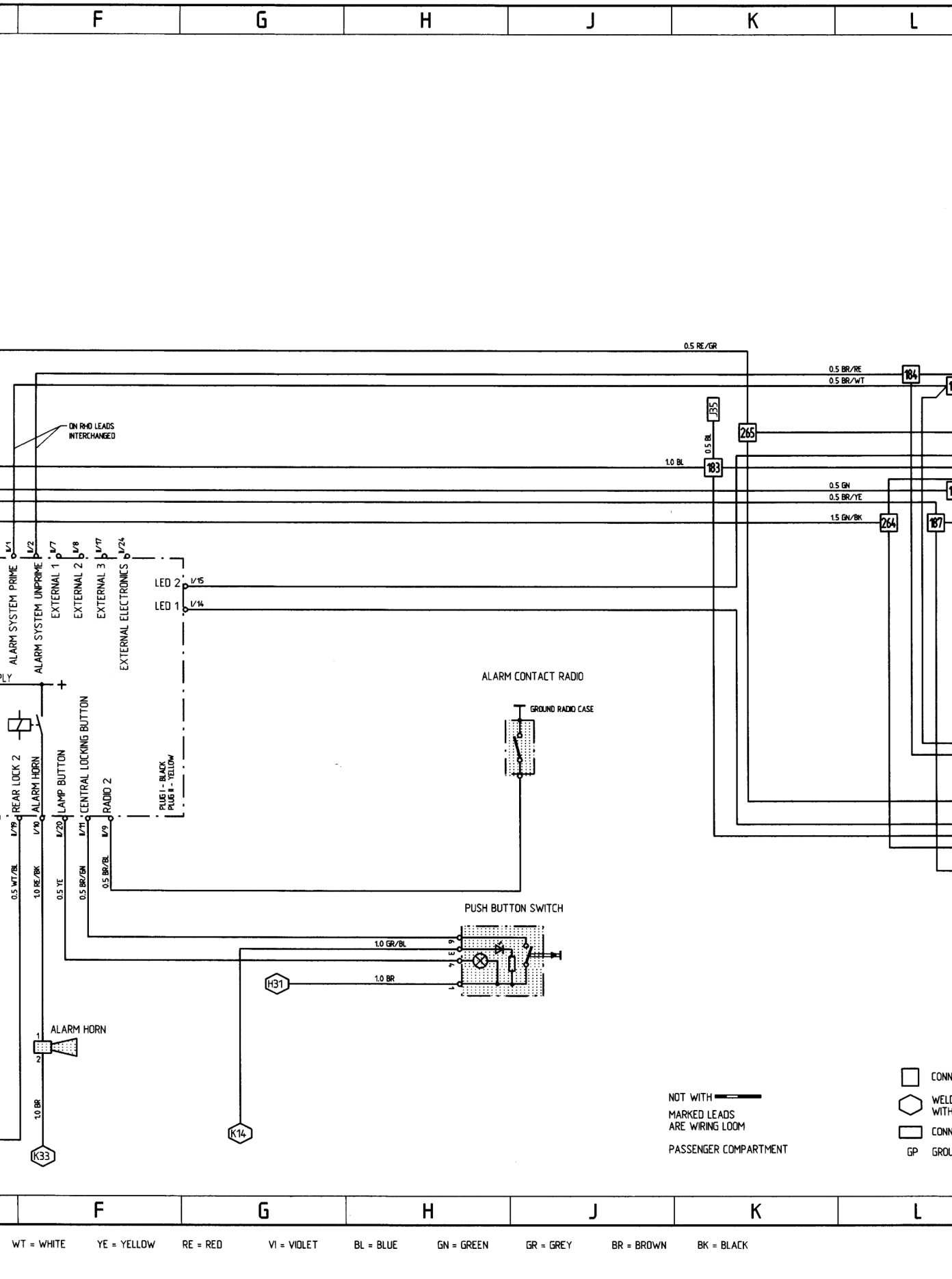
F
G
H
J
K
L
0.5 RE/GR
0.5 BR/RE
0.5 BR/WT
J35
0.5 BL
265
1.0 BL
183
0.5 GN
0.5 BR/YE
1.5 GN/BK
264
187
ON RHD LEADS INTERCHANGED
ALARM SYSTEM PRIME
ALARM SYSTEM UNPRIME
EXTERNAL 1
EXTERNAL 2
EXTERNAL 3
EXTERNAL ELECTRONICS
LED 2
LED 1
ALARM CONTACT RADIO
GROUND RADIO CASE
REAR LOCK 2
ALARM HORN
LAMP BUTTON
CENTRAL LOCKING BUTTON
RADIO 2
PLUG I - BLACK
PLUG II - YELLOW
0.5 WT/BL
1.0 RE/BK
0.5 YE
0.5 BR/GN
0.5 BR/BL
PUSH BUTTON SWITCH
1.0 GR/BL
1.0 BR
H31
ALARM HORN
1.0 BR
K33
K14
NOT WITH
MARKED LEADS
ARE WIRING LOOM
PASSENGER COMPARTMENT
CONN
WELD
WITH
CONN
GP
GROU
F
G
H
J
K
L
WT = WHITE
YE = YELLOW
RE = RED
VI = VIOLET
BL = BLUE
GN = GREEN
GR = GREY
BR = BROWN
BK = BLACK

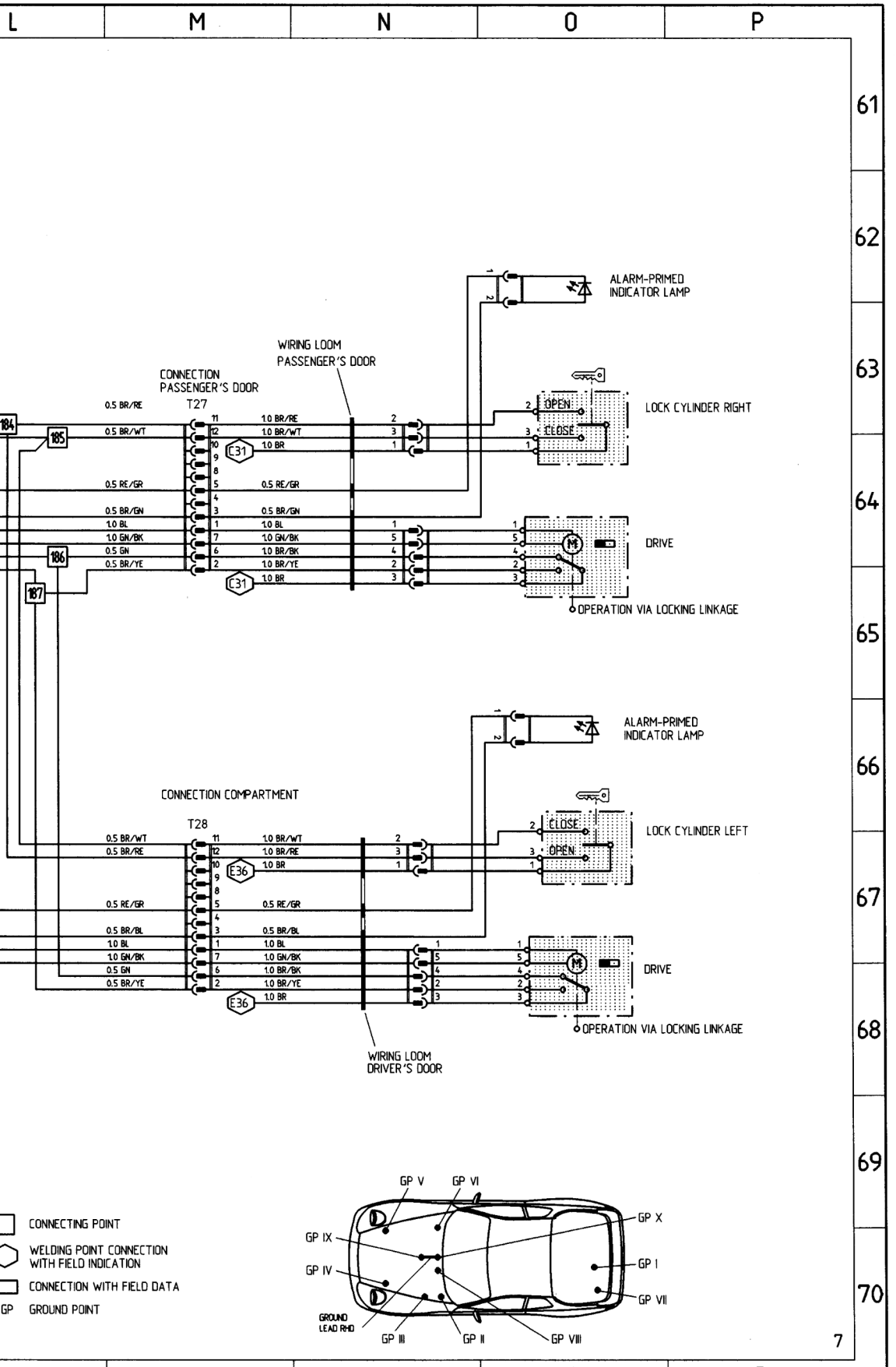
L
M
N
O
P
61
62
63
64
65
66
67
68
69
70
ALARM-PRIMED INDICATOR LAMP
WIRING LOOM PASSENGER'S DOOR
CONNECTION PASSENGER'S DOOR
T27
LOCK CYLINDER RIGHT
OPEN
CLOSE
DRIVE
OPERATION VIA LOCKING LINKAGE
CONNECTION COMPARTMENT
T28
LOCK CYLINDER LEFT
WIRING LOOM DRIVER'S DOOR
184
185
186
187
E31
E36
0.5 BR/RE
0.5 BR/WT
0.5 RE/GR
0.5 BR/GN
1.0 BL
1.0 GN/BK
0.5 GN
0.5 BR/YE
1.0 BR/RE
1.0 BR/WT
1.0 BR
1.0 BR/BK
0.5 BR/BL
CONNECTING POINT
WELDING POINT CONNECTION WITH FIELD INDICATION
CONNECTION WITH FIELD DATA
GP GROUND POINT
GP V
GP VI
GP X
GP IX
GP IV
GP I
GP VII
GROUND LEAD RHD
GP III
GP II
GP VIII
7

FOG LIGHT, REAR FOG LIGHT

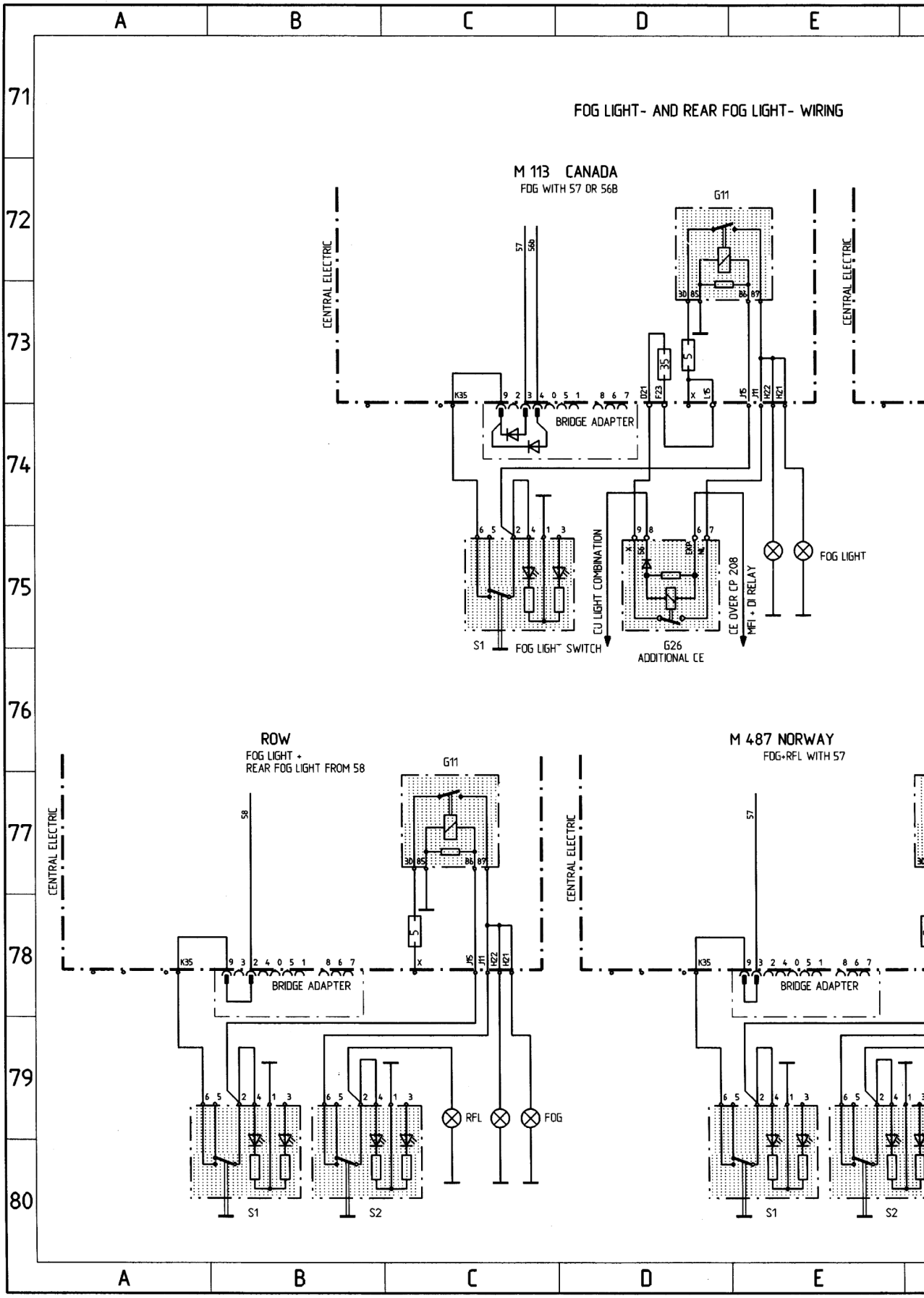

Printed in Germany - X, 1993

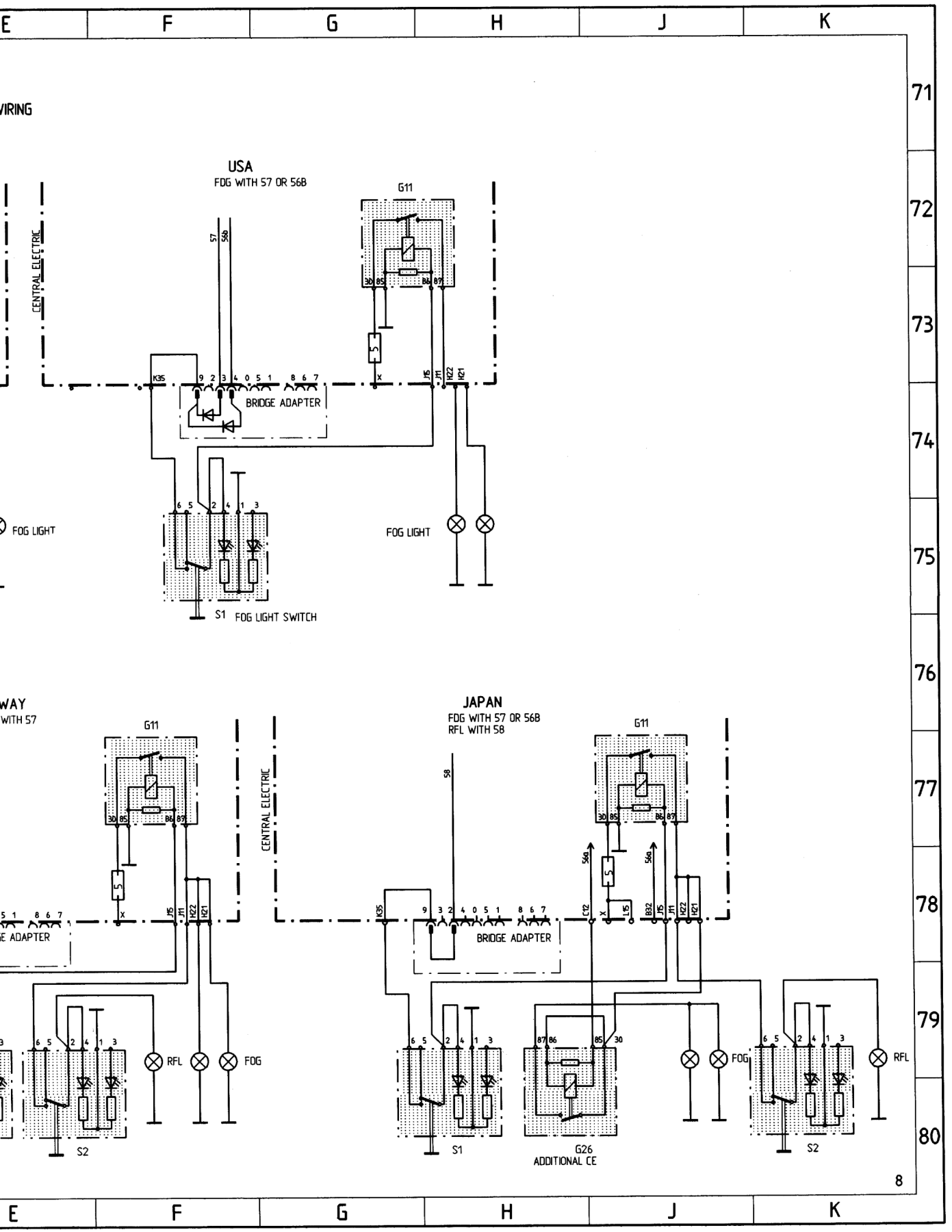
E
F
G
H
J
K
71
72
73
74
75
76
77
78
79
80
VIRING
USA
FOG WITH 57 OR 56B
G11
CENTRAL ELECTRIC
57
56B
30 85 86 87
5
K35 9 2 3 4 0 5 1 8 6 7
J15 J11 H22 H21
BRIDGE ADAPTER
6 5 2 4 1 3
FOG LIGHT
FOG LIGHT
S1 FOG LIGHT SWITCH
WAY
WITH 57
G11
30 85 86 87
5
J15 J11 H22 H21
E ADAPTER
6 5 2 4 1 3
RFL
FOG
S2
CENTRAL ELECTRIC
JAPAN
FOG WITH 57 OR 56B
RFL WITH 58
G11
58
56B
30 85 86 87
5
K35 9 3 2 4 0 5 1 8 6 7
C12 X L15 B32 J15 J11 H22 H21
BRIDGE ADAPTER
6 5 2 4 1 3
87 86 85 30
FOG
6 5 2 4 1 3
RFL
S1
G26
ADDITIONAL CE
S2
8

RADIO

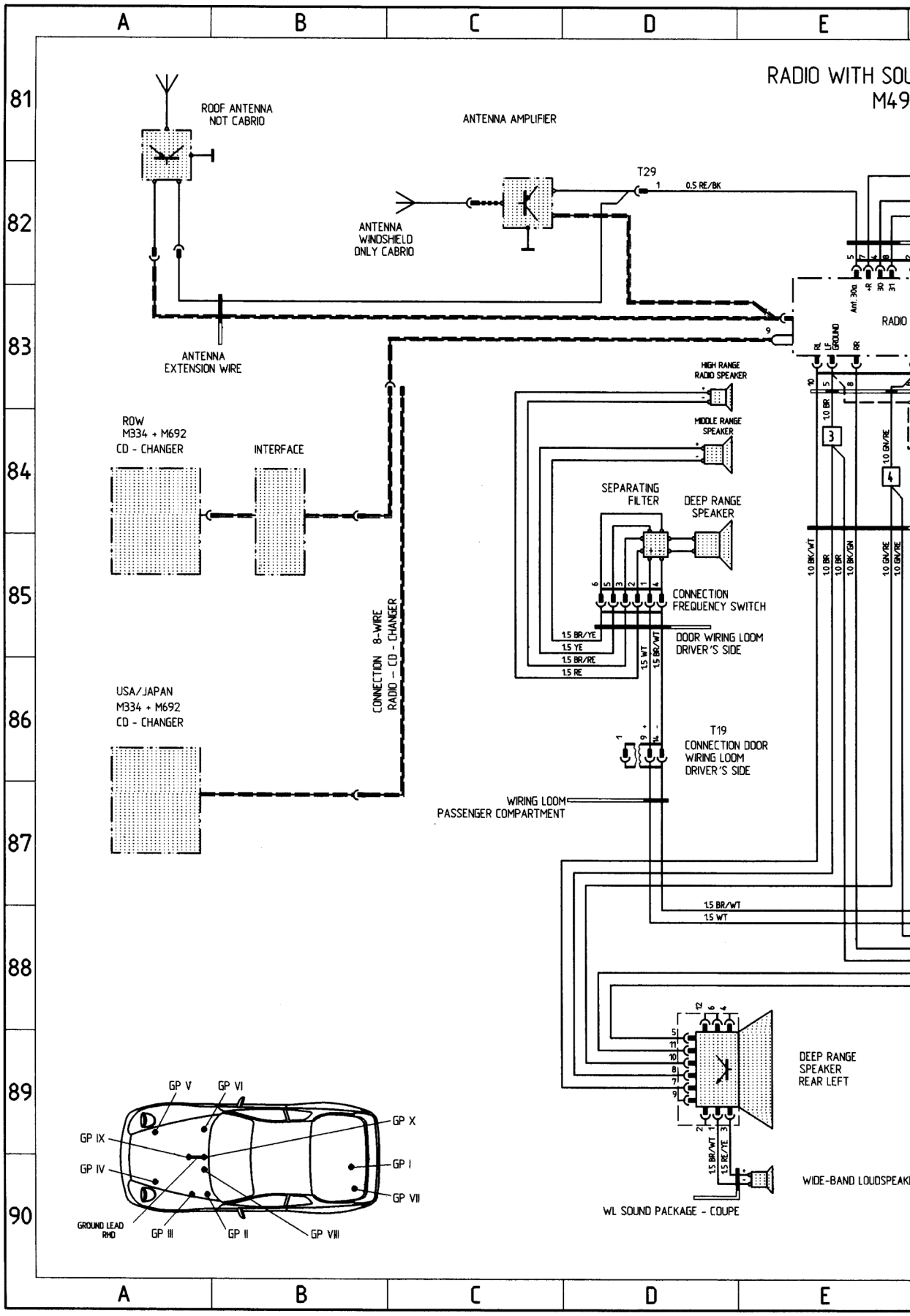

Printed in Germany - X, 1993

SOUND PACKAGE COUPE
490

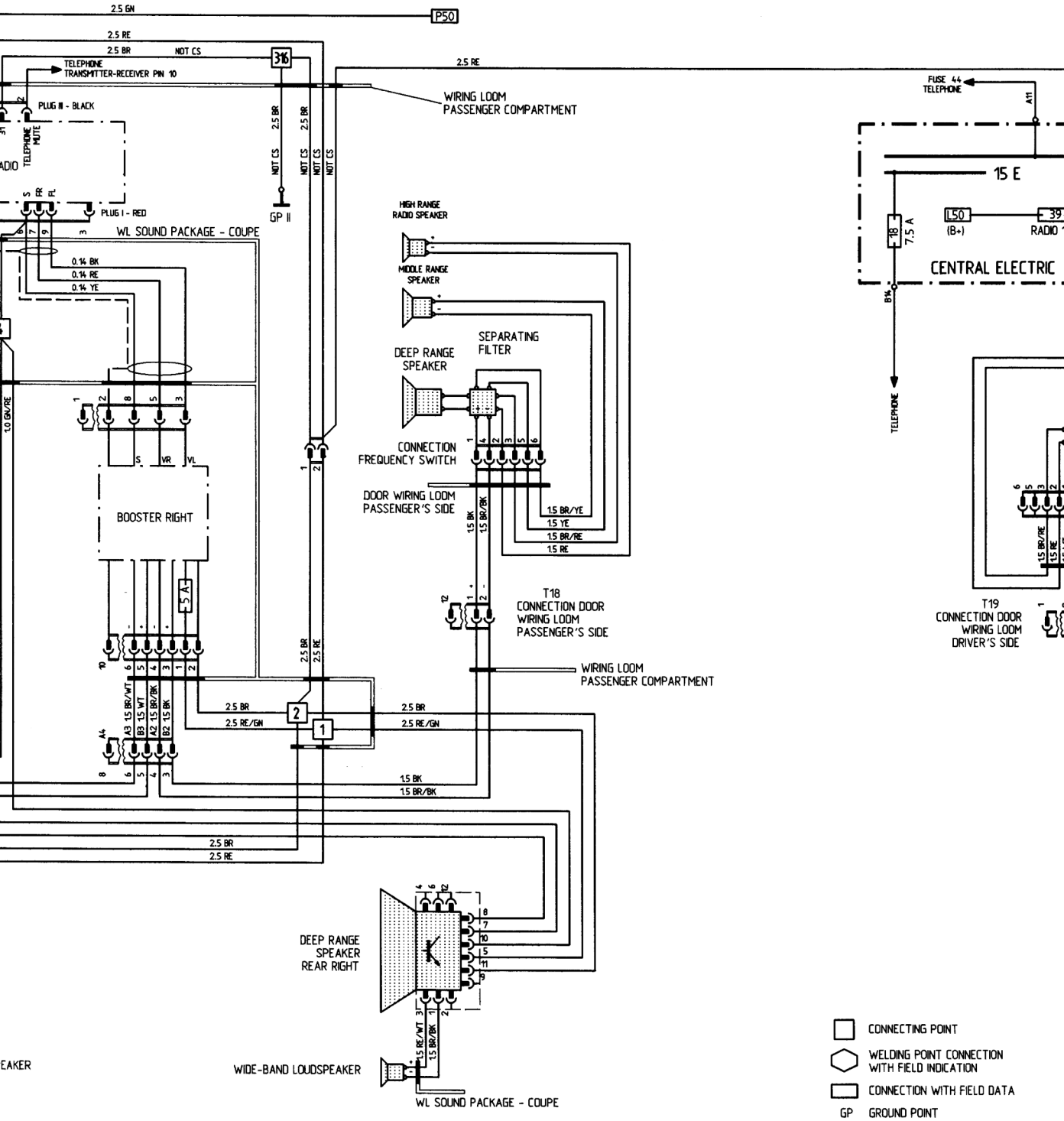

WT = WHITE YE = YELLOW RE = RED VI = VIOLET BL = BLUE GN = GREEN GR = GREY BR = BROWN BK = BLACK

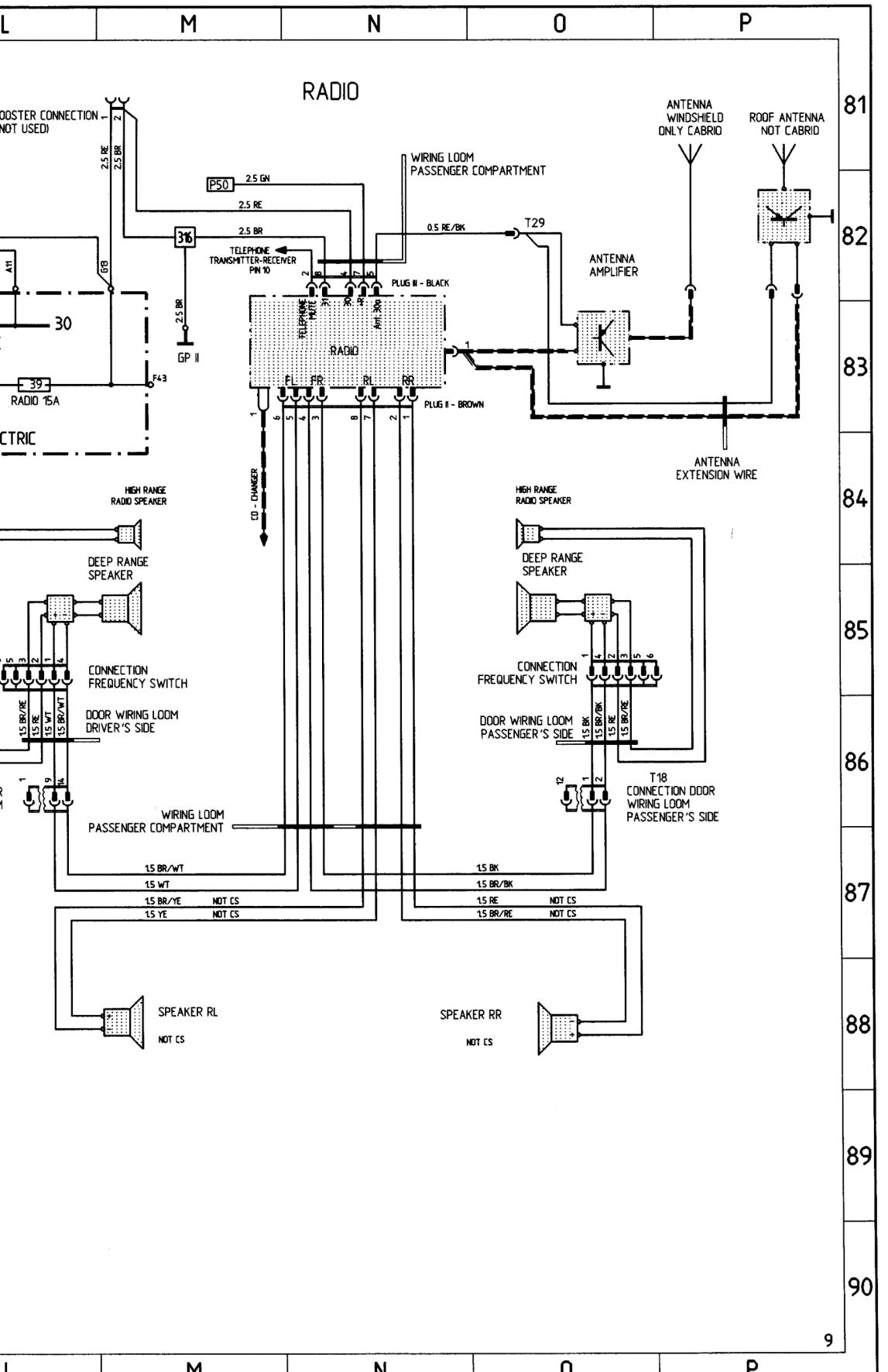
L
M
N
O
P
RADIO
OOSTER CONNECTION
NOT USED)
2.5 RE
2.5 BR
P50
2.5 GN
2.5 RE
2.5 BR
316
TELEPHONE
TRANSMITTER-RECEIVER
PIN 10
WIRING LOOM
PASSENGER COMPARTMENT
0.5 RE/BK
T29
ANTENNA
WINDSHIELD
ONLY CABRIO
ROOF ANTENNA
NOT CABRIO
ANTENNA
AMPLIFIER
PLUG III - BLACK
TELEPHONE MUTE
Ant. 30a
RADIO
FL
FR
RL
RR
PLUG II - BROWN
GP II
30
39
RADIO 15A
F43
CTRIC
CD - CHANGER
ANTENNA
EXTENSION WIRE
HIGH RANGE
RADIO SPEAKER
DEEP RANGE
SPEAKER
CONNECTION
FREQUENCY SWITCH
DOOR WIRING LOOM
DRIVER'S SIDE
DOOR WIRING LOOM
PASSENGER'S SIDE
T18
CONNECTION DOOR
WIRING LOOM
PASSENGER'S SIDE
WIRING LOOM
PASSENGER COMPARTMENT
1.5 BR/WT
1.5 WT
1.5 BR/YE
1.5 YE
NOT CS
1.5 BK
1.5 BR/BK
1.5 RE
1.5 BR/RE
SPEAKER RL
SPEAKER RR
81
82
83
84
85
86
87
88
89
90
9

RADIO CS, SOUND PACKAGE CABRIO

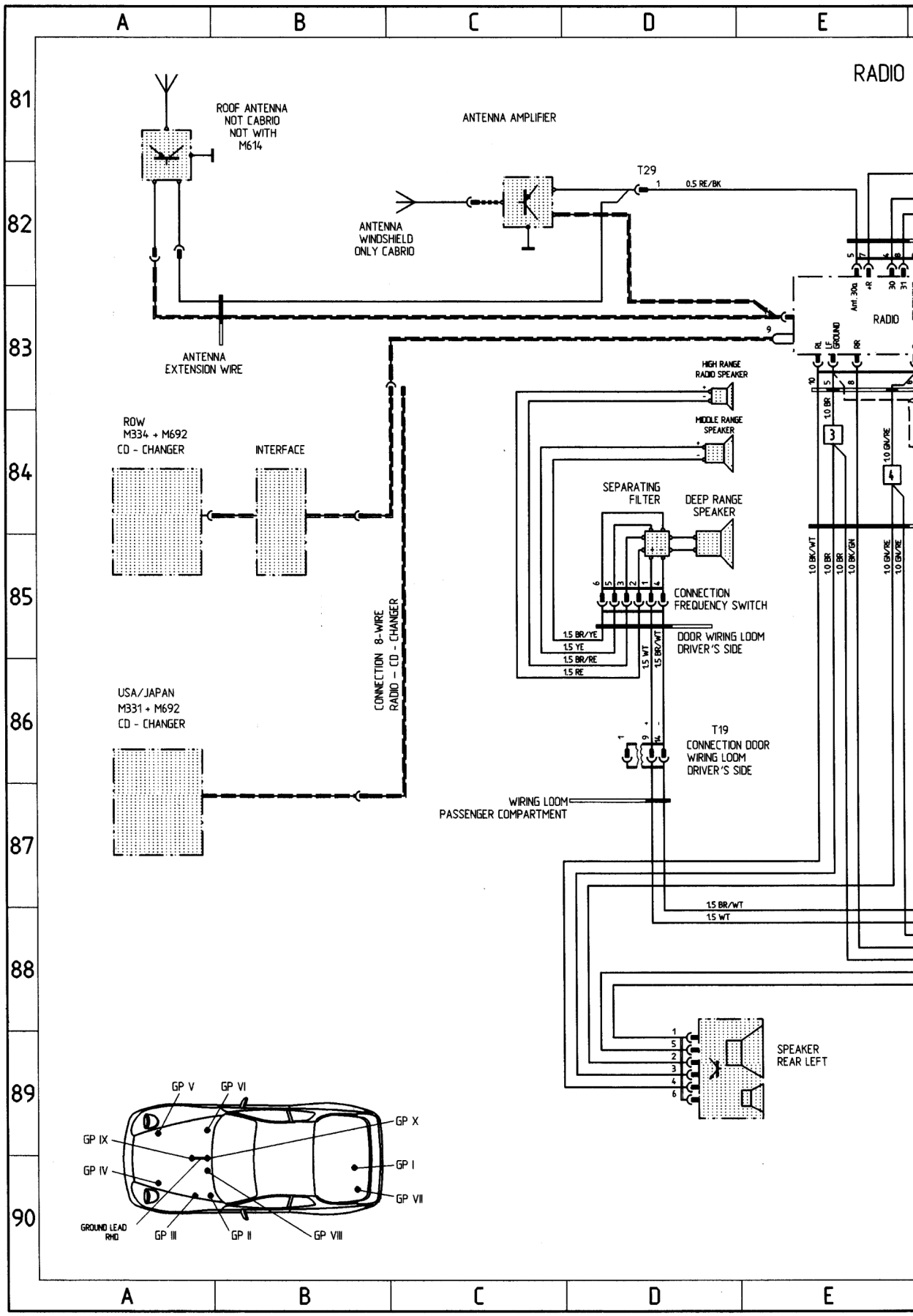

Printed in Germany - X, 1993

RADIO WITH SOUND PACKAGE CABRIO
M490

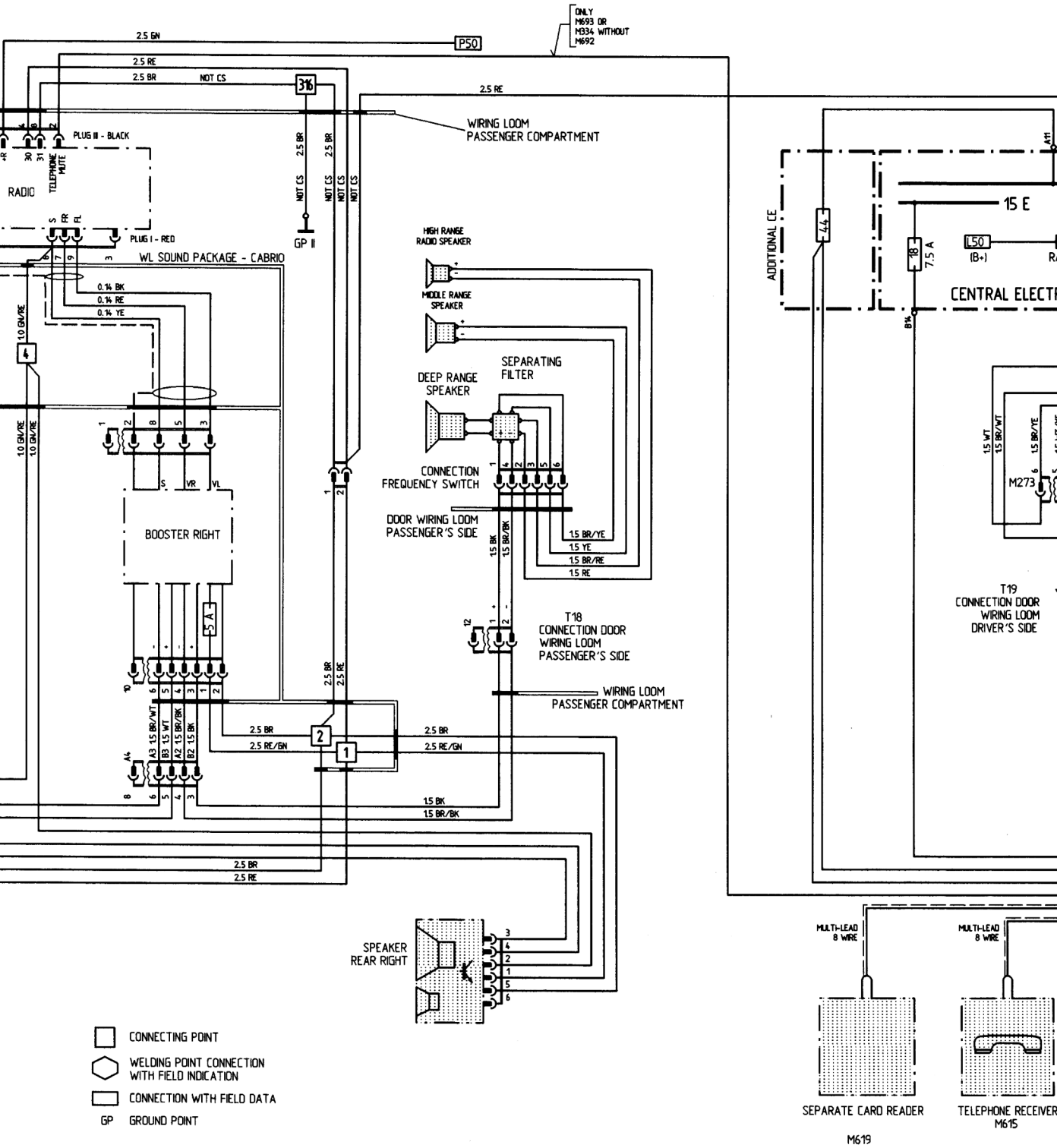

WT = WHITE YE = YELLOW RE = RED VI = VIOLET BL = BLUE GN = GREEN GR = GREY BR = BROWN BK = BLACK

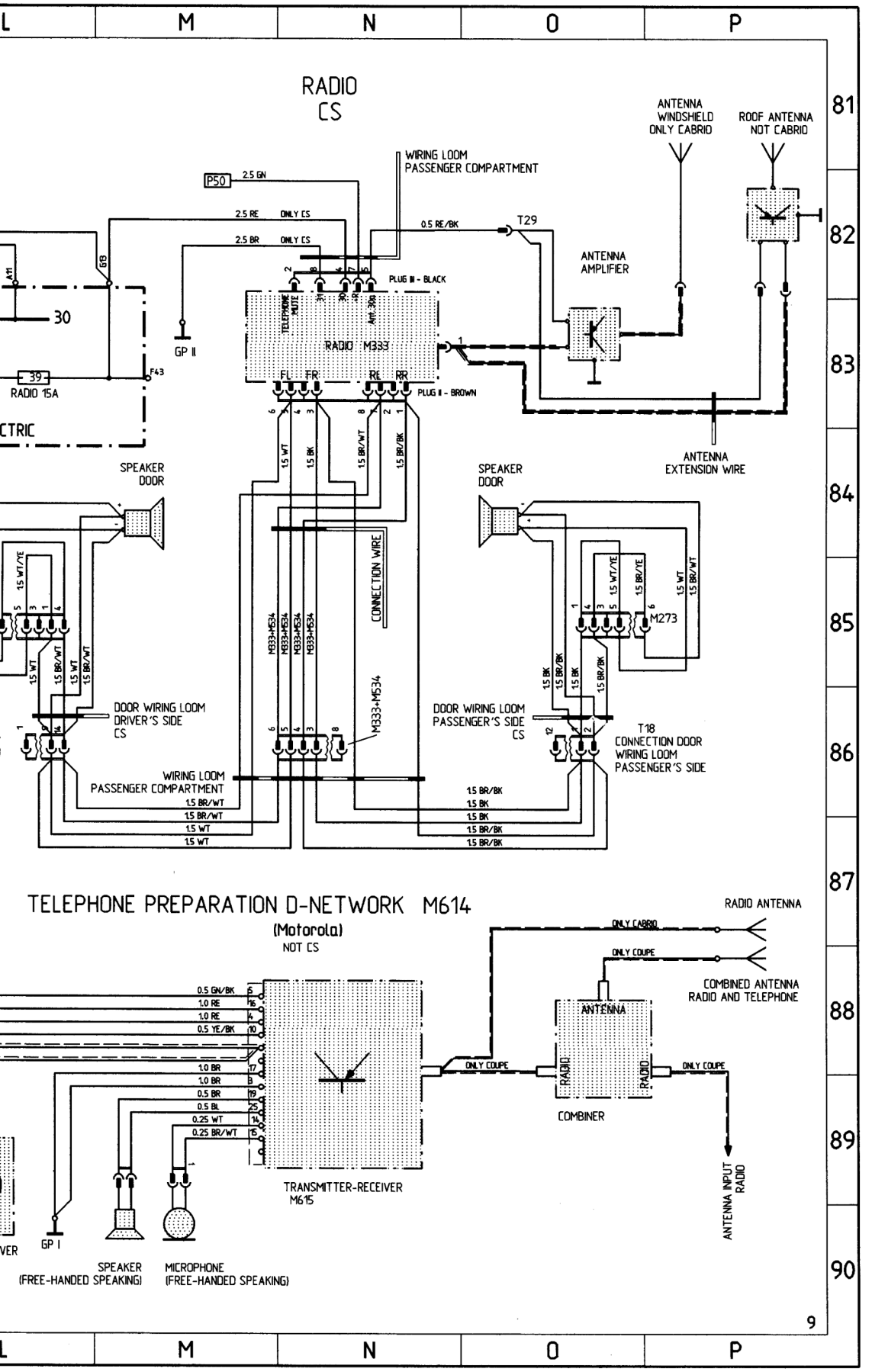
L
M
N
O
P
81
82
83
84
85
86
87
88
89
90
RADIO
CS
ANTENNA
WINDSHIELD
ONLY CABRIO
ROOF ANTENNA
NOT CABRIO
WIRING LOOM
PASSENGER COMPARTMENT
P50
2.5 GN
2.5 RE
ONLY CS
2.5 BR
ONLY CS
0.5 RE/BK
T29
ANTENNA
AMPLIFIER
PLUG III - BLACK
TELEPHONE MUTE
RADIO M333
FL
FR
RL
RR
PLUG II - BROWN
GP II
30
39
RADIO 15A
F43
CTRIC
ANTENNA
EXTENSION WIRE
SPEAKER
DOOR
SPEAKER
DOOR
CONNECTION WIRE
M333+M534
M273
DOOR WIRING LOOM
DRIVER'S SIDE
CS
DOOR WIRING LOOM
PASSENGER'S SIDE
CS
T18
CONNECTION DOOR
WIRING LOOM
PASSENGER'S SIDE
WIRING LOOM
PASSENGER COMPARTMENT
1.5 BR/WT
1.5 WT
1.5 BK
1.5 BR/BK
TELEPHONE PREPARATION D-NETWORK M614
(Motorola)
NOT CS
RADIO ANTENNA
ONLY CABRIO
ONLY COUPE
COMBINED ANTENNA
RADIO AND TELEPHONE
0.5 GN/BK
1.0 RE
0.5 YE/BK
1.0 BR
0.5 BR
0.5 BL
0.25 WT
0.25 BR/WT
ANTENNA
RADIO
COMBINER
TRANSMITTER-RECEIVER
M615
ANTENNA INPUT
RADIO
GP I
SPEAKER
(FREE-HANDED SPEAKING)
MICROPHONE
(FREE-HANDED SPEAKING)
9

ABS, AIRBAG

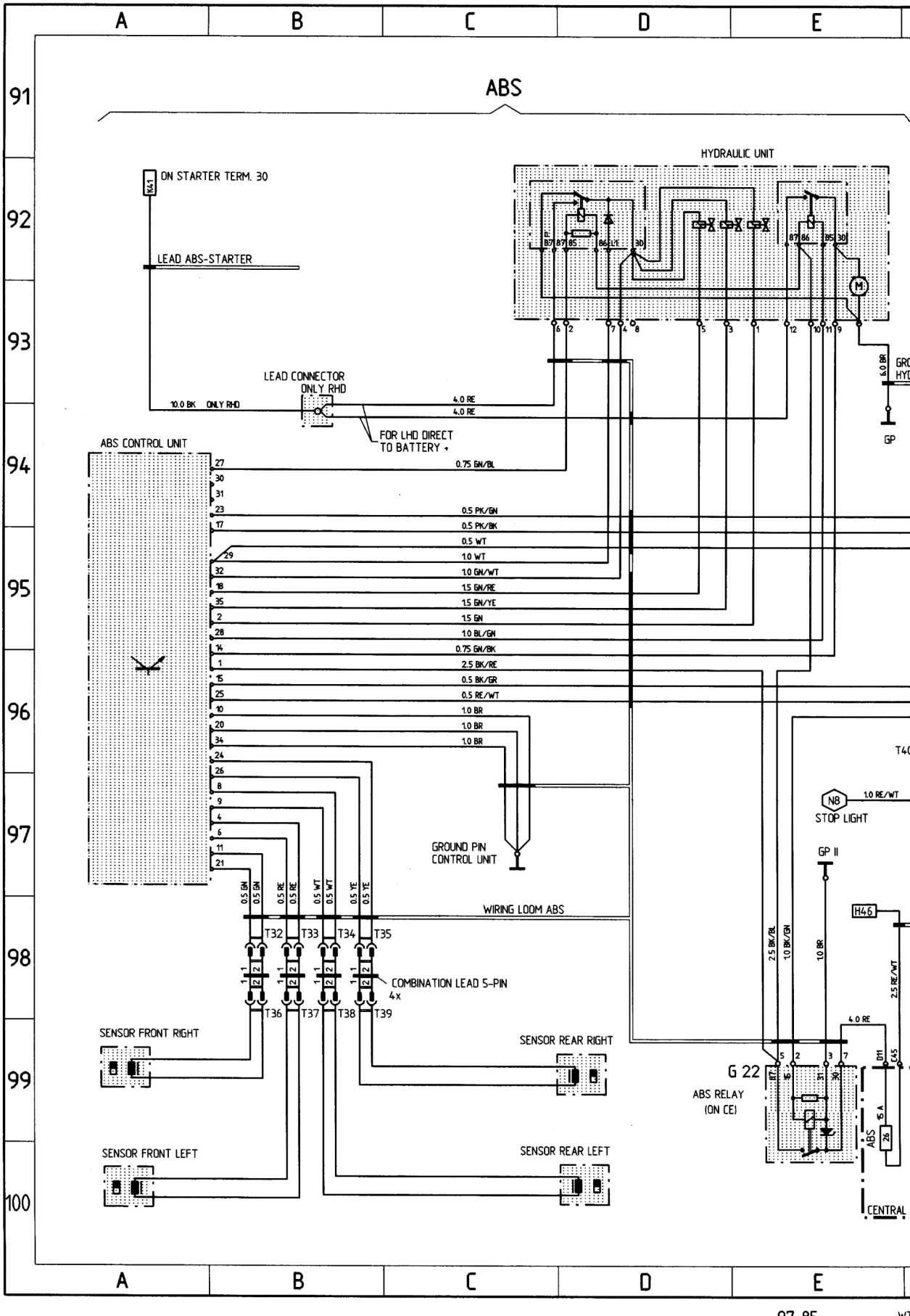

Printed in Germany - X, 1993

WIRING 968 CABRIO

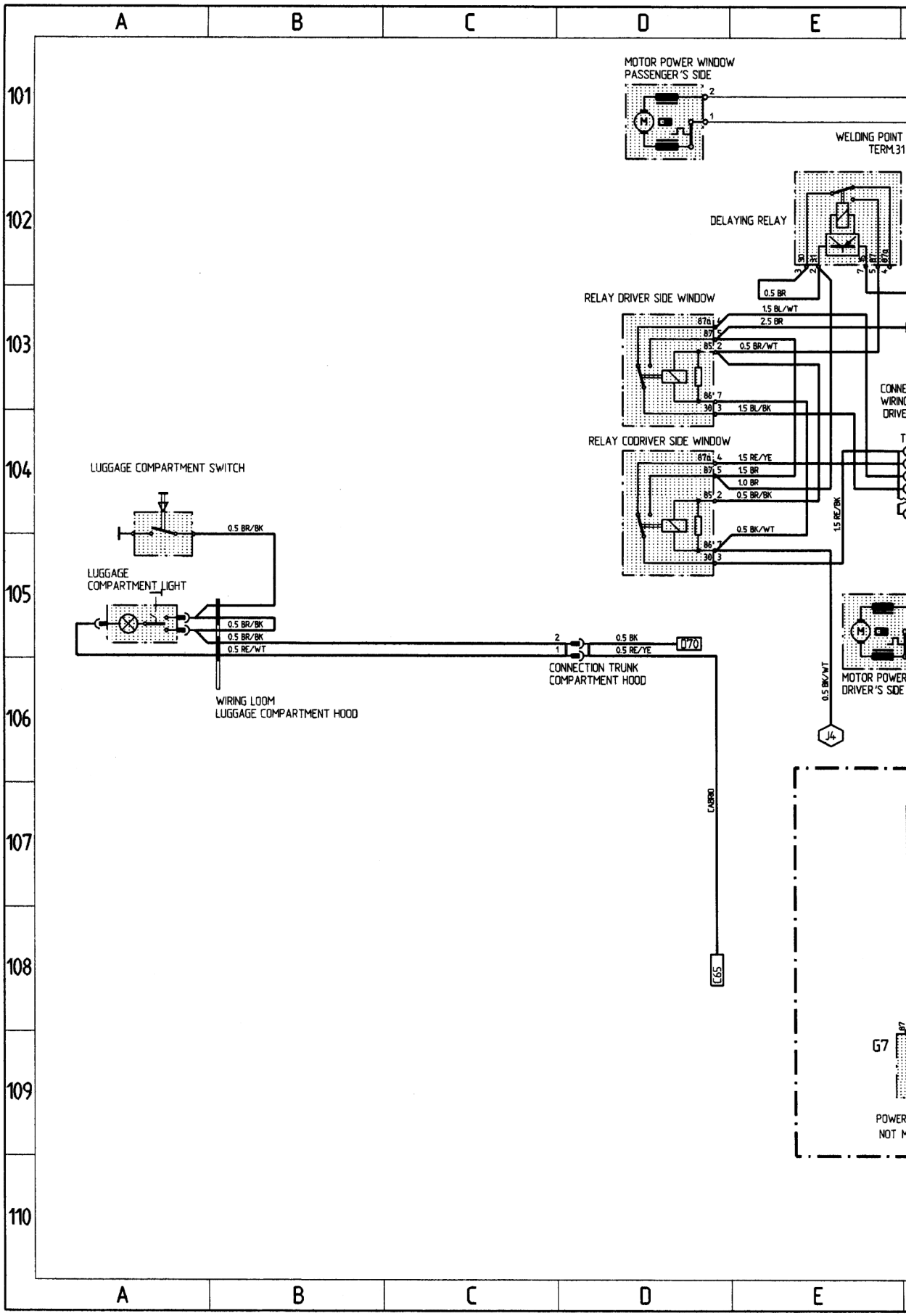

Printed in Germany - X. 1993

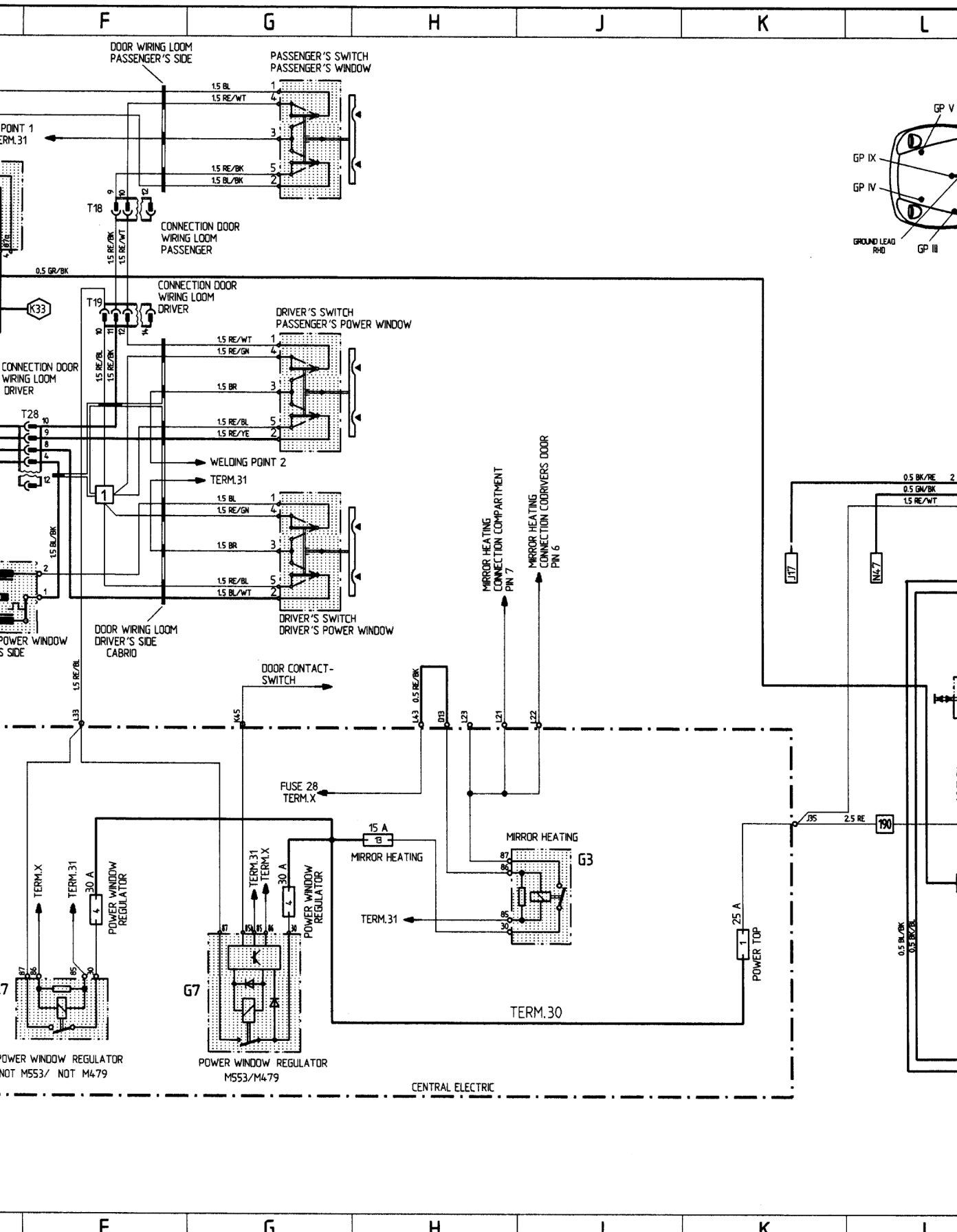

WT = WHITE YE = YELLOW RE = RED VI = VIOLET BL = BLUE GN = GREEN GR = GREY BR = BROWN BK = BLACK

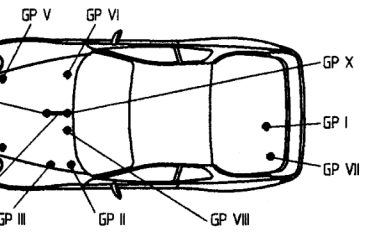

NOT WITH MARKED LEADS ARE WIRING LOOM PASSENGER COMPARTMENT

CABLE LAYOUT DIFFERING FROM SERIES VARIANT

WIRING AS STANDARD

CONNECTING POINT

WELDING POINT CONNECTION WITH FIELD INDICATION

CONNECTION WITH FIELD DATA

GP GROUND POINT

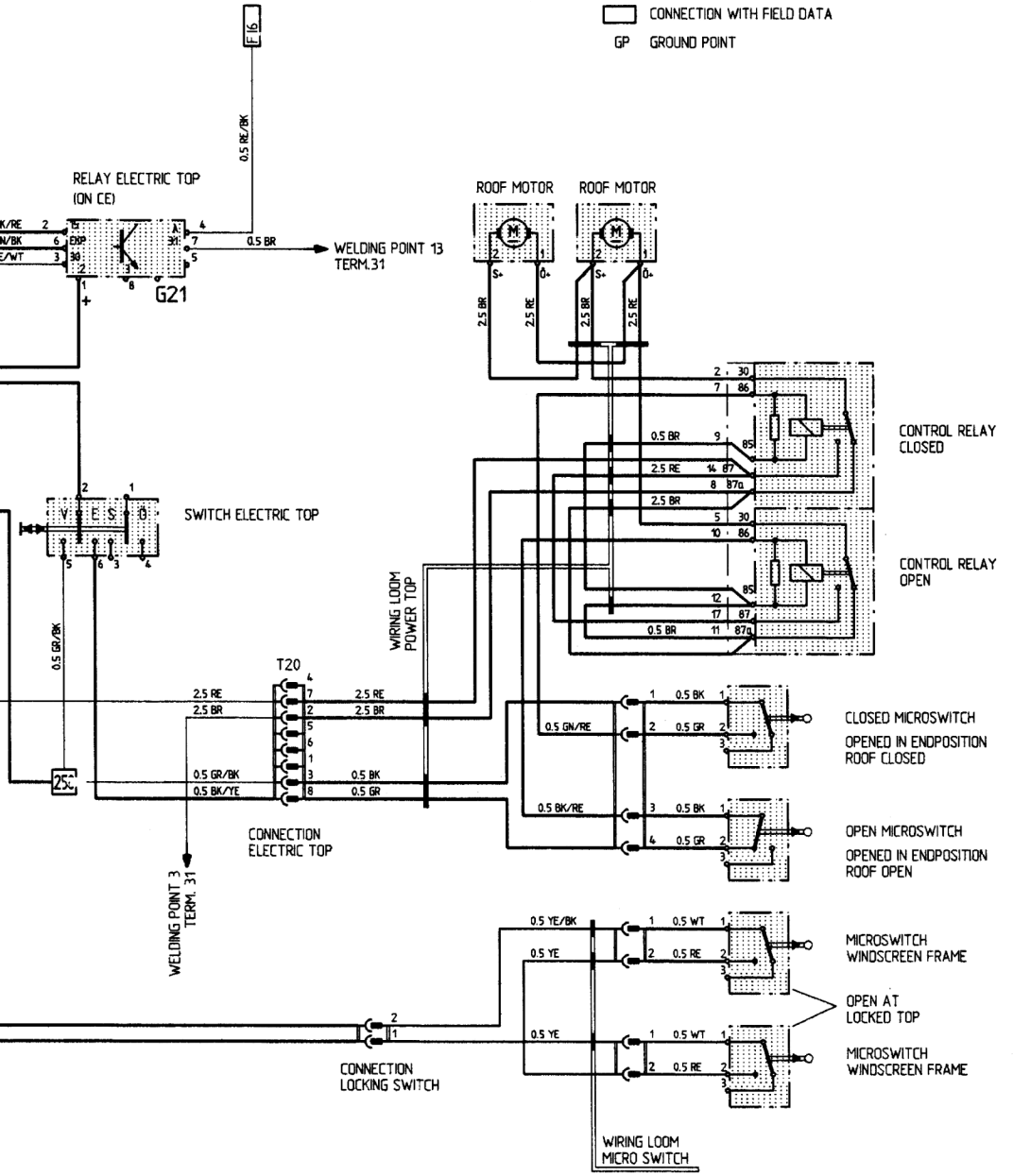

11

968 MODEL 94 SHEET 12

CONTROL UNIT AUTOMATIC TRANSMISSION

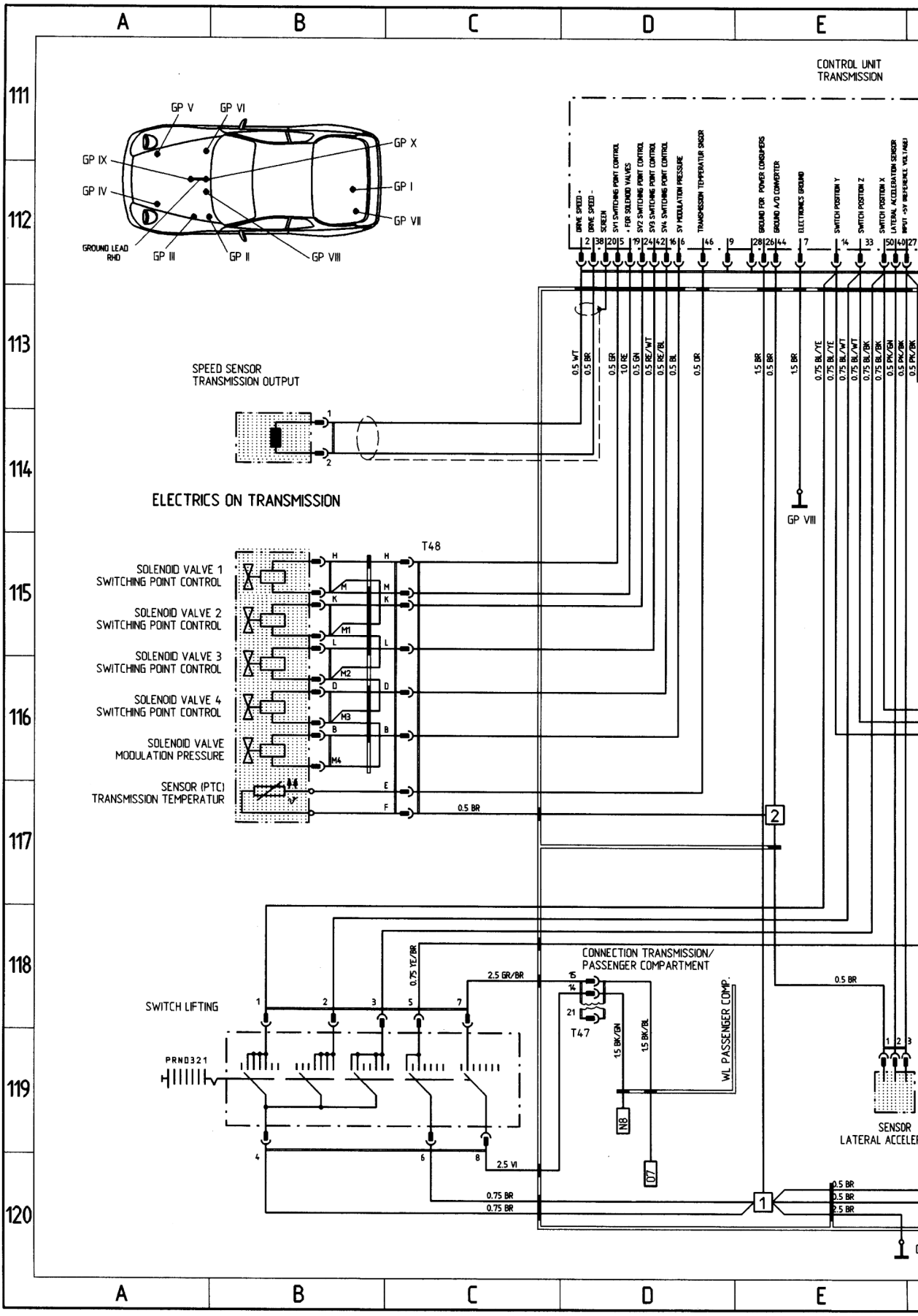

Printed in Germany - X, 1993

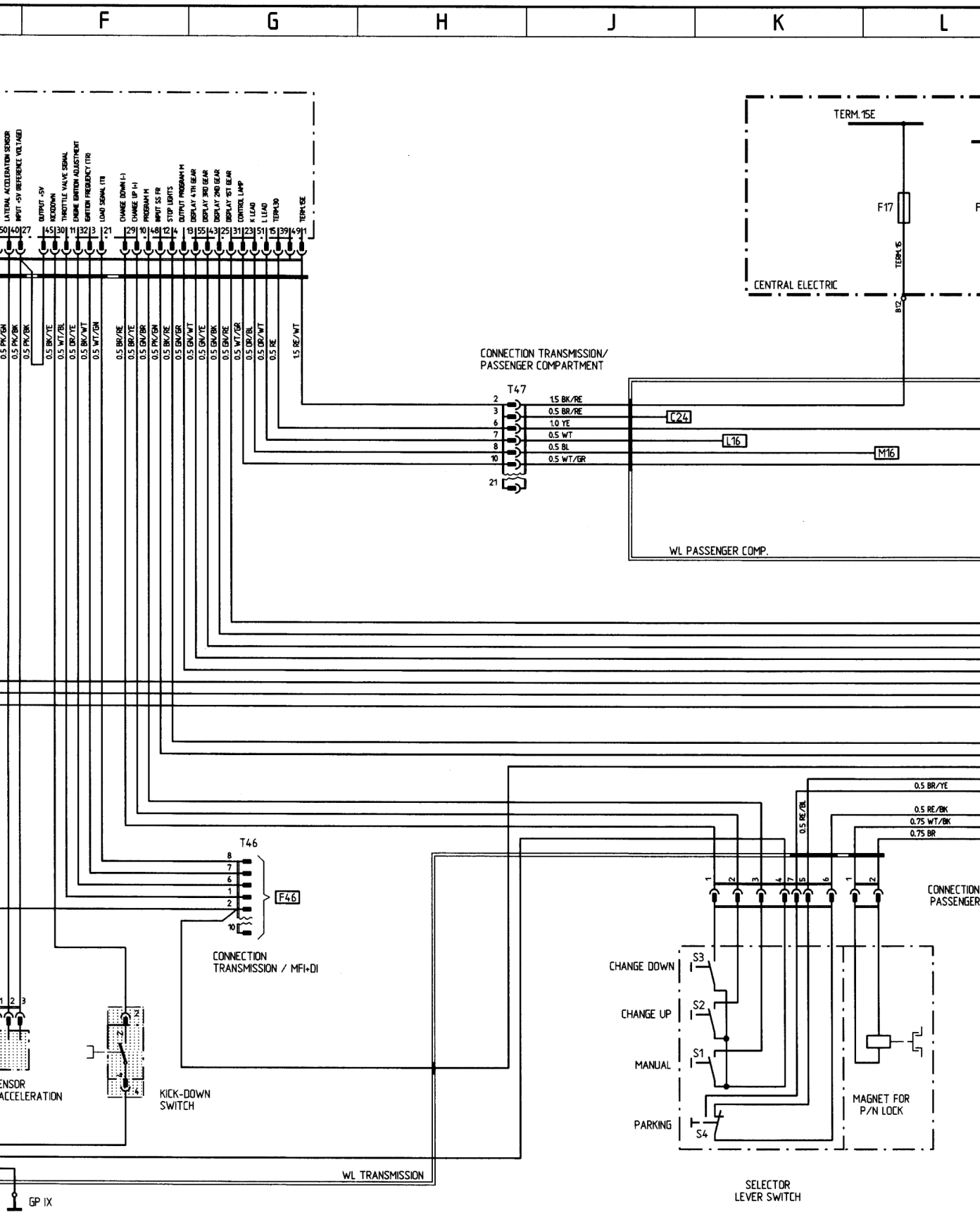
F
G
H
J
K
L
LATERAL ACCELERATION SENSOR
INPUT +5V REFERENCE VOLTAGE
OUTPUT +5V
KICKDOWN
THROTTLE VALVE SIGNAL
ENGINE IGNITION ADJUSTMENT
IGNITION FREQUENCY (TR)
LOAD SIGNAL (TR)
CHANGE DOWN (-)
CHANGE UP (+)
PROGRAM M
INPUT SS FR
STOP LIGHTS
OUTPUT PROGRAM M
DISPLAY 4TH GEAR
DISPLAY 3RD GEAR
DISPLAY 2ND GEAR
DISPLAY 1ST GEAR
CONTROL LAMP
K LEAD
L LEAD
TERM.30
TERM.15E
50 40 27 45 30 11 32 3 21 29 10 48 12 4 13 55 43 25 31 23 51 15 39 49 1
0.5 PK/GN
0.5 PK/BK
0.5 PK/BK
0.5 BK/YE
0.5 WT/BL
0.5 OR/YE
0.5 BK/WT
0.5 WT/GN
0.5 BR/RE
0.5 BR/YE
0.5 GN/BR
0.5 PK/GN
0.5 BK/RE
0.5 GN/GR
0.5 GN/WT
0.5 GN/YE
0.5 GN/BK
0.5 GN/RE
0.5 WT/GR
0.5 OR/BL
0.5 OR/WT
0.5 RE
1.5 RE/WT
TERM.15E
F17
TERM.15
CENTRAL ELECTRIC
CONNECTION TRANSMISSION/
PASSENGER COMPARTMENT
T47
2 1.5 BK/RE
3 0.5 BR/RE
6 1.0 YE
7 0.5 WT
8 0.5 BL
10 0.5 WT/GR
21
C24
L16
M16
WL PASSENGER COMP.
T46
8 7 6 1 2 10
F46
CONNECTION
TRANSMISSION / MFI+DI
0.5 BR/YE
0.5 RE/BL
0.5 RE/BK
0.75 WT/BK
0.75 BR
1 2 3 4 5 6 1 2
CONNECTION
PASSENGER
CHANGE DOWN
CHANGE UP
MANUAL
PARKING
S3
S2
S1
S4
MAGNET FOR
P/N LOCK
SELECTOR
LEVER SWITCH
1 2 3
ENSOR
ACCELERATION
KICK-DOWN
SWITCH
WL TRANSMISSION
GP IX
F
G
H
J
K
L
WT = WHITE
YE = YELLOW
RE = RED
VI = VIOLET
BL = BLUE
GN = GREEN
GR = GREY
BR = BROWN
BK = BLACK

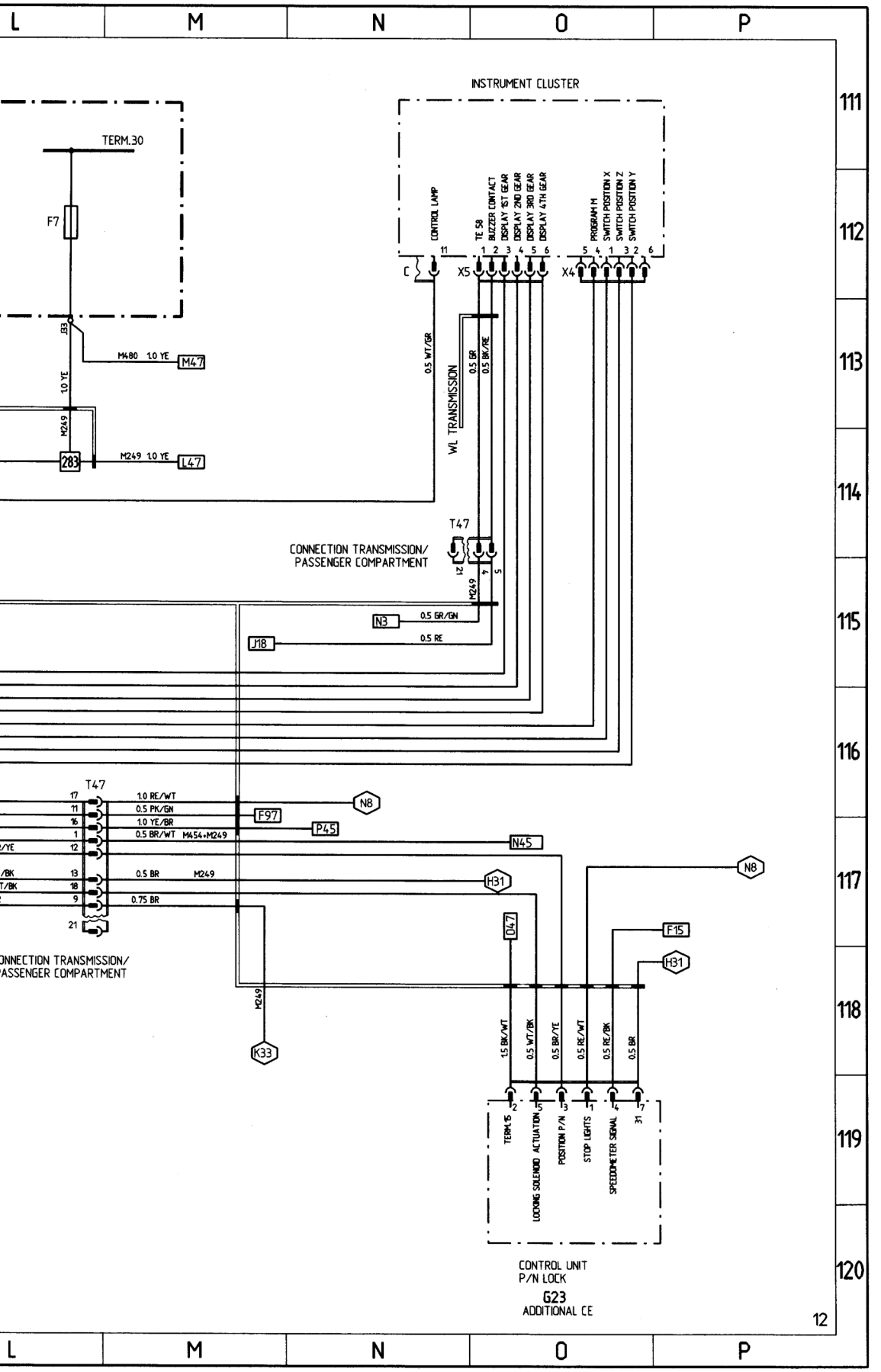
L
M
N
O
P
111
112
113
114
115
116
117
118
119
120
INSTRUMENT CLUSTER
CONTROL LAMP
TE 58
BUZZER CONTACT
DISPLAY 1ST GEAR
DISPLAY 2ND GEAR
DISPLAY 3RD GEAR
DISPLAY 4TH GEAR
PROGRAM M
SWITCH POSITION X
SWITCH POSITION Z
SWITCH POSITION Y
C
X5
X4
TERM.30
F7
J33
M480 1.0 YE
M47
1.0 YE
M249
283
M249 1.0 YE
L47
0.5 WT/GR
0.5 GR
0.5 BK/RE
WL TRANSMISSION
T47
CONNECTION TRANSMISSION/
PASSENGER COMPARTMENT
N3
0.5 GR/GN
J18
0.5 RE
T47
17
11
16
1
12
13
18
9
21
1.0 RE/WT
0.5 PK/GN
1.0 YE/BR
0.5 BR/WT M454+M249
0.5 BR M249
0.75 BR
F97
P45
N45
N8
H31
D47
F15
M249
K33
1.5 BK/WT
0.5 WT/BK
0.5 BR/YE
0.5 RE/WT
0.5 RE/BK
0.5 BR
TERM.15
LOCKING SOLENOID ACTUATION
POSITION P/N
STOP LIGHTS
SPEEDOMETER SIGNAL
31
CONTROL UNIT
P/N LOCK
G23
ADDITIONAL CE
12

A | B | C | D | E

CONSTRUCTION COMPONENTS

DESIGNATION, FUNCTION	POSITION IN VEHICLE LHD	POSITION IN VEHICLE RHD	NOTE	FIELD IN WIRING DIAGRAM
ADDITIONAL CE	6cP	—	LEFT TO STEERING COLUMN	SHEET 6
ADDITIONAL CE	—	6cQ	LEFT TO GLOVE BOX	SHEET 6
AIR COMPRESSOR	3dO	3dO	ON ENGINE	A24
ALARM-PRIMED INDICATOR LAMP LEFT	12bR	12bR	IN PUSH-BUTTON OF LEFT DOOR	O66
ALARM-PRIMED INDICATOR LAMP RIGHT	12bK	12bK	IN PUSH-BUTTON OF RIGHT DOOR	O62
ALARM HORN	7bL	7bL	IN WATER BOX	F69
ALARM SWITCH ENGINE HOOD	2cO	2cO	ENGINE HOOD LOCK	A63
ANTENNA AMPLIFIER	7cL	7cL	IN FOOTWELL, RIGHT SIDE	E82,D83
BATTERY	6cL	—	IN WATER BOX	H42
BATTERY	—	16cR	IN LEFT BOHLMANN COMPARTMENT	H42
BUZZER CONTACT	8cP	8cM	ON IGNITION LOCK	J18
CABRIO: ROOF MOTORS	14cN/O	14cN/O	BELOW THE PARCEL TRAY	N/O104
CABRIO: MOTOR POWER WINDOW PASSENGER'S SIDE	9dK	9dR	IN PASSENGER'S DOOR	D101
CABRIO: MOTOR POWER WINDOW DRIVER'S SIDE	9dR	9dK	ON DRIVER'S DOOR	E105
CABRIO: RELAY CODRIVER SIDE WINDOW	6dM	6dP	IN PASSENGER'S FOOTWELL	D104
CABRIO: RELAY DRIVER SIDE WINDOW	6dM	6dP	IN PASSENGER'S FOOTWELL	D103
CABRIO: POWER TOP			(G21) CE	L/M104
CABRIO: CONTROL RELAY ROOF WITH MICROSWITCHES	14cM	14cM	IN LUGGAGE COMPARTMENT ON FIREWALL	O105-110
CABRIO: DELAYING RELAY	6dM	6dP	IN PASSENGER'S FOOTWELL	E102
CATALYTIC CONVERTER CONTROL (ONLY JAPAN)			(G24) ADDITIONAL CE	D20
CENTRAL ELECTRIC	7bQ	7bQ	LEFT IN WATER BOX	SHEET 6
CLUTCH SWITCH	7dP	7dM	TO FOOT CONTROLS	N44-45
CONTACT UNIT AIRBAG	9bP	9bM	ON STEERING WHEEL	G/H95
CONTROL UNIT ABS	7cL	7cL	IN FOOTWELL, RIGHT SIDE	A94-97
CONTROL UNIT AIRBAG	6cM	7bO/P	IN PASSENGER'S FOOTWELL	K93-96
CONTROL UNIT ALARM SYSTEM/CENTRAL LOCKING SYSTEM	6dM	6dP	IN PASSENGER'S FOOTWELL	D-F65-67
CONTROL UNIT MFI+DI	6dM	6dP	IN PASSENGER'S FOOTWELL	D42-50
CONTROL UNIT TRANSMISSION	15cK	15cK	IN REAR RIGHT FENDER	D-G111-112
CONTROL UNIT GONG			(G25) ADDITIONAL CE	K/L19-20
CONTROL UNIT LIFTING ROOF			(G21) CE	H35
CONTROL UNIT LIGHT COMBINATION			(G17+G18) CE	F/G2
CONTROL UNIT P/N LOCK (USA/CANADA)			(G23) ADDITIONAL CE	O119
CONTROL UNIT CRUISE CONTROL	7cR	7cR	IN LEFT FOOTWELL	M44/45
CONTROL UNIT SEAT HEATER LEFT SEAT	10dQ	10dQ	UNDER THE SEAT	O/P25-26
CONTROL UNIT SEAT HEATER RIGHT SEAT	10dL	10dL	UNDER THE SEAT	L21
COOLANT TEMP. SENSOR	4cO	4cO	ON ENGINE BLOCK	B45
COOLANT TEMP. SWITCH AND SENSOR	4dP	4dP	ON ENGINE BLOCK	E/F47
CRASH SENSOR LEFT	7cQ	7cQ	INSIDE FIREWALL LEFT	G95
CRASH SENSOR RIGHT	7cL	7cL	INSIDE FIREWALL RIGHT	G92
DIAGNOSIS PLUG SOCKET	7dM	7dP	IN PASSENGER'S FOOTWELL	M12
DRIVE LEFT HEADLIGHT VERTICAL AIM CONTROL	2cP	2cP	ON HEADLIGHT LEFT	A6
DRIVE RIGHT HEADLIGHT VERTICAL AIM CONTROL	2cM	2cM	ON HEADLIGHT RIGHT	A5
DRIVE LEFT CENTRAL LOCK	11cR	11cR	IN DOOR LEFT	O64-65
DRIVE RIGHT CENTRAL LOCK	11cK	11cK	IN DOOR RIGHT	O67-68
DRIVE CRUISE CONTROL	6cL	6cL	IN ENGINE COMPARTMENT	L44
ELECTRICS ON TRANSMISSION	15/16dP	15/16dP	IN TRANSMISSION	B115-117
FAN MOTOR 1	3cN	3cN	ON RADIATOR	A28
FAN MOTOR 2	3cN	3cN	ON RADIATOR	A27
FLOAT SWTCH BRAKE FLUID	6cP	6cM	IN BRAKE FLUID RESERVOIR	C18
FUEL LEVEL SENSOR	15dN	15dN	IN FUEL TANK	C17
FUEL PUMP	15dL	15dL	ON BASE REAR RIGHT	N46-47
GAS PRESSURE PROP LEFT	15bQ	15bQ	ON TAILGATE	K25

A | B | C | D | E

DESIGNATION, FUNCTION	POSITION IN VEHICLE LHD	RHD	NOTE	FIELD IN WIRING DIAGRAM
GAS PRESSURE PROP RIGHT	15bL	15bL	ON TAILGATE	L26
GENERATOR	3cO	3cO	ON ENGINE	J/K41/42
HALL SENSOR	3cM	3cM	ON TOOTHED BELT HOUSING OVER	B46
HEADLIGHT CLEANERS PUMP (HCS)	6cL	6cL	IN FRONT RIGHT FENDER	A25-26
HEATED OXYGEN SENSOR	2dP	2dP	ON RADIATOR	B45-46
HYDRAULIC UNIT	7dK	7dK	IN FRONT RIGHT FENDER	D/E92
IDLE SPEED POSITIONER	5cO	5cO	IN ENGINE COMPARTMENT	B49
IGNITION COIL	3cL	3cL	WHEEL HOUSING RIGHT FRONT	J45
INSIDE TEMPERATURE SENSOR	8cM	8cP	IN CONTROL PANEL AREA	E21
KICK-DOWN SWITCH	7dO	7dN	TO FOOT CONTROLS	F119
KNOCK SENSOR 1	5cN	5cN	ON ENGINE BLOCK	B47
KNOCK SENSOR 2	5cN	5cN	ON ENGINE BLOCK	B48
MAGNET P/N LOCK (USA/CANADA)	9dN	9dN	AT SELECTOR LEVER SUPPORT	K/L119
MASS AIR FLOW SENSOR	3cP	3cP	IN ENGINE COMPARTMENT	F42
MICRO SWITCH ROOF CLOSED	10aO	10aO	IN ROOF	K40
MOTOR CONCEALED HEADLIGHT LEFT	2dP	2dP	AT LEFT HEADLAMP BODY	D1
MOTOR CONCEALED HEADLIGHT RIGHT	2dM	2dM	AT RIGHT HEADLAMP BODY	E1
MOTOR LIFTING ROOF WITH CONTROL RELAY AND MICRO SWITCH	16dQ	16dQ	IN LEFT BOHLMANN COMPARTMENT	K36-40
MOTOR POWER WINDOW PASSENGER'S SIDE	9dK	9dR	IN PASSENGER'S DOOR	D31
MOTOR POWER WINDOW DRIVER'S SIDE	9dR	9dK	ON DRIVER'S DOOR	D35
MOTOR WINDSHIELD WIPER	7bO	7bN	IN WATER BOX	H/J25-27
OIL PRESSURE SENSOR/ PRESSURE SWITCH	3dM	3dM	ON ENGINE BLOCK BELOW OIL FILTER	F47
OIL TEMPERATURE SENSOR	5cN	5cN	AT CRANKCASE	B44
OUTSIDE TEMPERATURE SENSOR	6cN	6cN	IN HEATER BOX	A23
PARKING BRAKE CONTACT	9dR	9dK	ON HAND BRAKE LEVER	C15-16
PRESSURE SWITCH AIR CONDITIONING SYSTEM	3dQ	3dQ	IN ENGINE COMPARTMENT FRONT LEFT	A24-25
PUMP WINDSCREEN WASH	6cL	6cL	IN FRONT RIGHT FENDER	A26
RELAY ABS			(G22) CE	E99
RELAY AC			(G19) CE	A22
RELAY FOG LIGHT CUTOFF (ONLY JAPAN)			(G26) ADDITIONAL CE	H1
RELAY START LOCK (ONLY AUTOMATIC-TRANSMISSION)			(G20) CE	P44
RELAY DAYTIME RUNNING LIGHT (ONLY CANADA)			(G26) ADDITIONAL CE	L3
SEAT BELT CONTACT	10dO	10dN	TO BELT BUCKLE	C15
SENSOR LATERAL ACCELERATION	8eN	8eN	UNDER THE RIGHT SEAT	E119
SPEED SENSOR / MFI + DI	6cN	6cN	ABOVE FLYWHEEL	B49
SPEED SENSOR CU TRANSMISSION	14dM	14dM	BY TRANSMISSION RIGHT	B114
STARTER	7cN	7cN	ON CLUTCH BELL HOUSING	L42
STOP LIGHT SWITCH	7dP	7dM	TO FOOT CONTROLS	09
SWITCH TAILGATE UNLOCKING	7dQ	7dL	IN DRIVER'S FOOTWELL	F31
SWITCH COOLING WATER TEMPERATURE	2dP	2dP	ON RADIATOR	A29-30
SWITCH OIL LEVEL WARNING	6eN	6eN	UNDER THE ENGINE ON OIL PAN	F43
SWITCH BACKUP LIGHT	15dO	15dO	(ONLY TRANSMISSION)	07-8
TAILGATE UNLOCKING MOTOR	18cM	18cM	IN LUGGAGE COMPARTMENT AT END-PANEL	G/H33
TEMPERATURE SENSOR FOR CATALYZER	9eN	9eN	ON CATALYZER	C19
THROTTLE VALVE POTENTIOMETER	4/5cO	4/5cO	ON THROTTLE VALVE ASSEMBLY	B47
TWO-TONE HORN 1	3cQ	3cQ	IN FRONT LEFT FENDER	A39
TWO-TONE HORN 2	3cQ	3cQ	IN FRONT LEFT FENDER	A40
VALVE CAMSHAFT CONTROL	5cM	5cM	AT CYLINDER HEAD COVER	B44
VALVE TANK VENTING	6cQ	6cQ	IN ENGINE COMPARTMENT (ONLY CAT.)	B43

M N O P

1 2 3 4 5 6 7 8 9 10 11 12 13 14 15 16 17 18

a b c d e

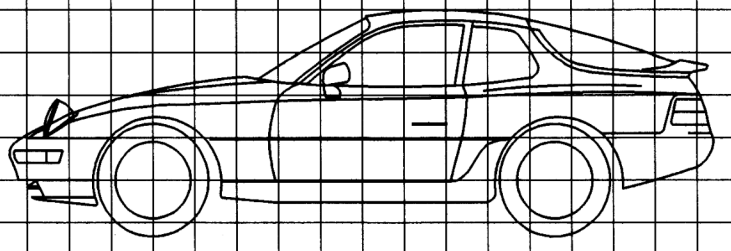

K L M N O P Q R

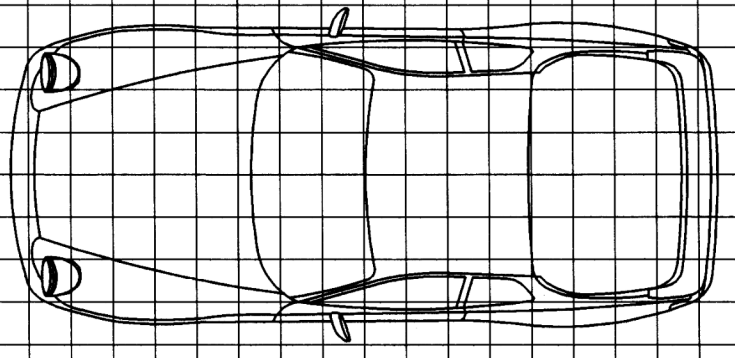

13

PLUG CONNECTIONS, GROUND POINTS, ABBREVIATIONS

A | B | C | D | E

PLUG CONNECTIONS

CODE	NUMBER OF PINS	DESIGNATION, FUNCTION	POSITION IN VEHICLE LHD	POSITION IN VEHICLE RHD	NOTE
T1	14	WL PASSENGER COMPARTMENT / WL MFI+DI	6dM	6dP	IN PASSENGER'S FOOTWELL
T2					
T3					
T4	2	BRAKE PAD WEAR CONTACT FRONT RIGHT / COMBI. LEAD	5dL	5dL	LOW ON SHOCK ABSORBER
T5	2	COMB. LEAD RIGHT / WL FRONT (BVA)	6cL	6cL	IN ENGINE COMPARTMENT
T6	2	COMB. LEAD LEFT / WL FRONT (BVA)	6cQ	6cQ	IN ENGINE COMPARTMENT
T7	2	BRAKE PAD WEAR CONTACT FRONT LEFT / COMBI. LEAD	5dQ	5dQ	LOW ON SHOCK ABSORBER
T8	2	BRAKE PAD WEAR CONTACT REAR RIGHT / COMBI. LEAD	14dL	14dL	ON SEMI-TRAILING ARM
T9	2	COMB. LEAD RIGHT / WL PASSENGER COMP.	15dM	15dM	ABOVE DRIVE SHAFTS ON LUGGAGE COMPARTMENT PANEL
T10	2	COMB. LEAD LEFT / WL PASSENGER COMP.	15dP	15dP	
T11	2	BRAKE PAD WEAR CONTACT REAR LEFT / COMBI. LEAD	14dQ	14dQ	ON SEMI-TRAILING ARM
T12	6	WL HEATER, AIR CONDITIONING / PASSENGER COMP.	7cO/N	7cO/N	IN CONTROL PANEL AREA
T13	7	WL PASSENGER COMPARTMENT / ENGINE HOOD	6bP	6bP	IN ENGINE HOOD
T14	8	SEAT RIGHT / WL PASSENGER COMPARTMENT	11eM	11eM	LOW ON SEAT
T15	8	SEAT LEFT / WL PASSENGER COMPARTMENT	11eP	11eP	LOW ON SEAT
T16	4	REAR WINDOW WIPER, HIGH MOUNTED STOP LIGHT/ WL PASSENGER COMP. ONLY COUPE	14cQ	14cQ	BEHIND C-PILLAR
T17					
T18	12	WL PASSENGER COMPARTMENT / WL PASSENGER'S DOOR ONLY COUPE	7dK	7dR	IN PASSENGER'S FOOTWELL
T18	12	WL PASSENGER COMPARTMENT / WL PASSENGER'S DOOR ONLY CABRIO	7dK	7dR	IN PASSENGER'S FOOTWELL
T19	14	WL PASSENGER COMPARTMENT / WL DRIVER'S DOOR ONLY COUPE	7dR	7dK	IN DRIVER'S FOOTWELL
T19	14	WL PASSENGER COMPARTMENT / WL DRIVER'S DOOR ONLY CABRIO	7dR	7dK	IN DRIVER'S FOOTWELL
T20	8	WL PASSENGER COMPARTMENT / WL SUN ROOF ONLY COUPE	16dQ	16dQ	IN BOHLMANN COMPARTMENT
T20	8	WL PASSENGER COMPARTMENT / WL POWER TOP ONLY CABRIO	16dQ	16dQ	IN BOHLMANN COMPARTMENT
T21	14	WIRING LOOM MFI + DI / WIRING LOOM FRONT END	6cP	6cP	IN ENGINE COMPARTMENT
T22	2	CODING PLUG / MFI + DI	6dM	6dP	IN PASSENGER'S FOOTWELL
T23					
T24	2	WL GENERATOR STARTER / WL FRONT END	6cO	6cO	IN ENGINE COMPARTMENT
T25					
T26	19	DIAGNOSIS PLUG	6dL	6dO	IN PASSENGER'S FOOTWELL
T27	12	WL PASSENGER COMPARTMENT / WL PASSENGER'S DOOR	7dK	7dR	IN PASSENGER'S FOOTWELL
T28	12	WL PASSENGER COMPARTMENT / WL DRIVER'S DOOR	7dR	7dK	IN DRIVER'S FOOTWELL
T29	1	ANTENNA AMPLIFIER / WL PASSENGER COMP.	7cO	7cO	BEHIND THE RADIO
T30					
T31					
T32	2	WL ABS / COMBINATION LEAD FR	6cL	6cL	IN ENGINE COMPARTMENT
T33	2	WL ABS / COMBINATION LEAD FL	6cQ	6cQ	IN ENGINE COMPARTMENT
T34	2	WL ABS / COMBINATION LEAD RL	15dP	15dP	ABOVE DRIVE SHAFTS
T35	2	WL ABS / COMBINATION LEAD RR	15dM	15dM	ON LUGGAGE COMPARTMENT PANEL
T36	2	COMB. LEAD FR / ABS-SENSOR FR	5dL	5dL	LOW ON SHOCK ABSORBER
T37	2	COMB. LEAD FL / ABS-SENSOR FL	5dQ	5dQ	LOW ON SHOCK ABSORBER
T38	2	COMB. LEAD RL / ABS-SENSOR RL	14dQ	14dQ	ON SEMI-TRAILING ARM
T39	2	COMB. LEAD RR / ABS-SENSOR RR	14dL	14dL	ON SEMI-TRAILING ARM
T40	6	WL PASSENGER COMPARTMENT / WL ABS	6dM	6dM	IN FOOTWELL, RIGHT SIDE
T41	6	WL PASSENGER COMPARTMENT / WL AIRBAG	6dM	7cO/P	IN PASSENGER'S FOOTWELL
T42	2	WL PASSENGER COMPARTMENT / WL AIRBAG	6cM	—	IN PASSENGER'S FOOTWELL
T43	3	SPEED- REFERENCE MARK SENSOR / MFI + DI	6cN	6cN	ON ENGINE REAR
T44	3	HEATED OXYGEN SENSOR / MFI+DI	6cN	6cN	ON ENGINE REAR
T45	2	WL PASSENGER COMPARTMENT/ FUEL PUMP	13dM	13dM	AT TRANSMISSION SUPPORT
T46	10	WL MFI+DI / WL TRANSMISSION	7cM	7cP	IN PASSENGER'S FOOTWELL
T47	21	WL PASSENGER COMPARTMENT / WL TRANSMISSION	7cK	7cL	IN PASSENGER'S FOOTWELL
T48	8	WL TRANSMISSION/ ELECTRICS ON TRANSMISSION ONLY M249	15/16dP	15/16dP	ON GEARBOX

A | B | C | D | E

Printed in Germany - X, 1993

	FIELD IN WIRING DIAGRAM
	N15, F44/45
	A15
	A16
	A18
	A19
	P15
	P16
	P18
	P19
	D23
	J27/28, B64
	L22
	N27
	O23
	BC32, HJ86, OP86
	F102, HJ86, OP86
	BC34, D86, L86
	F103, D86, L86
	H38
	M107/108
	G48/49
	A50
	J43
	L/N12
	M63-65
	M68,E/F104
	F82, 082
	B98
	B98
	B98
	B98
	B98
	B98
	B98
	B98
	F96
	H97
	J96, 013
	B: 9
	B45/46
	M47
	F46, G118
	D118, H114, N114, L117
	C115-117

GROUND POINTS

CODE	DESIGNATION, FUNCTION	POSITION IN VEHICLE LHD	RHD
MP I	COVER PANEL	18c0	18c0
MP II	INSIDE FIREWALL ELECTRONICS CHASSIS	7cP	7cP
MP III	INSIDE FIREWALL CABLE TO GROUND	7cP	7cP
MP IV	LONGITUDINAL SUPPORT	3dP	3dP
MP V	LONGITUDINAL SUPPORT	3dM	3dM
MP VI	BODY BATTERY LHD	6cL	—
MP VII	BODY BATTERY RHD	—	16cQ
MP VIII	ENGINE BLOCK "MFI+DI ELECTRONICS CHASSIS	6c0	6c0
MP IX	CLUTCH BELL HOUSING BATTERY LEAD LHD MFI + DI CABLE TO GROUND	7c0	7c0
MP X	BODY RHD FIREWALL	—	7c0

ABBREVIATIONS

CODE	MEANING	CODE	MEANING
ABS	ANTILOCK BRAKING SYSTEM	LHD	LEFT-HAND DRIVE
AC	AIR CONDITIONING SYSTEM	MFI + DI	DIGITAL ENGINE ELECTRONICS
ADL	ADDITIONAL DRIVING LIGHTS	NO	NUMBER
CE	CENTRAL ELECTRIC	NTC	NEGATIVE TEMPERATURE COEFFICIENT
CL	CLOSE	OP	OPEN
CLS	CENTRAL LOCKING SYSTEM	PIN	PIN
CP	CONNECTING POINT	PL	PLUG
CS	CLUBSPORT VERSION	POT	POTENTIOMETER
CU	CONTROL UNIT	RA	REAR AXLE
DEF	DEFROST	RFL	REAR FOG LIGHT
DP	DISCONNECTING POINT	RHD	RIGHT-HAND DRIVE
ESO	ENGINE-SPEED SENSOR OUTPUT	RL	REAR LEFT
FA	FRONT AXLE	ROW	REST OF WORLD
FCU	FREQUENCY CONVERTER UNIT	RR	REAR RIGHT
FL	FRONT LEFT	SA	SAUDI ARABIA
FOG	FOG LIGHT	SCS	COMBINED STEERING COLUMN SWITCH
FR	FRONT RIGHT	SS	SPEED SENSOR
GP	GROUND POINT	TE	TERMINAL
HCS	HEADLIGHT CLEANING SYSTEM	WL	WIRING LOOM
HF	HIGH FREQUENCY	WP	WELD POINT
IC	INSTRUMENT CLUSTER	WW	WORLDWIDE
LED	LIGHT-EMITTING DIODE		
LF	LOW FREQUENCY		

L | M | N | O | P

M - NUMBERS

M 113	CANADA VERSION	M 480	6-RANGE-TRANSMISSION
M 139	SEAT HEATER SEAT LEFT	M 484	USA VERSION
M 150	WITHOUT CATALYZER	M 490	AUDIO OPTION PACK
M 193	JAPAN VERSION	M 543	ANTI-JOY RIDE DEVICE
M 215	SAUDI-ARABIA VERSION	M 553	USA-CANADA VERSION
M 249	AUTOMATIC TRANSMISSION	M 562	AIRBAG
M 288	HEADLIGHT CLEANING SYSTEM	M 573	AIR CONDITIONING SYSTEM
M 340	SEAT HEATER SEAT RIGHT	M 605	HEADLIGHT VERTICAL AIM CONTROL
M 454	CRUISE CONTROL	M 650	LIFTING ROOF
M 479	AUSTRALIAN VERSION		

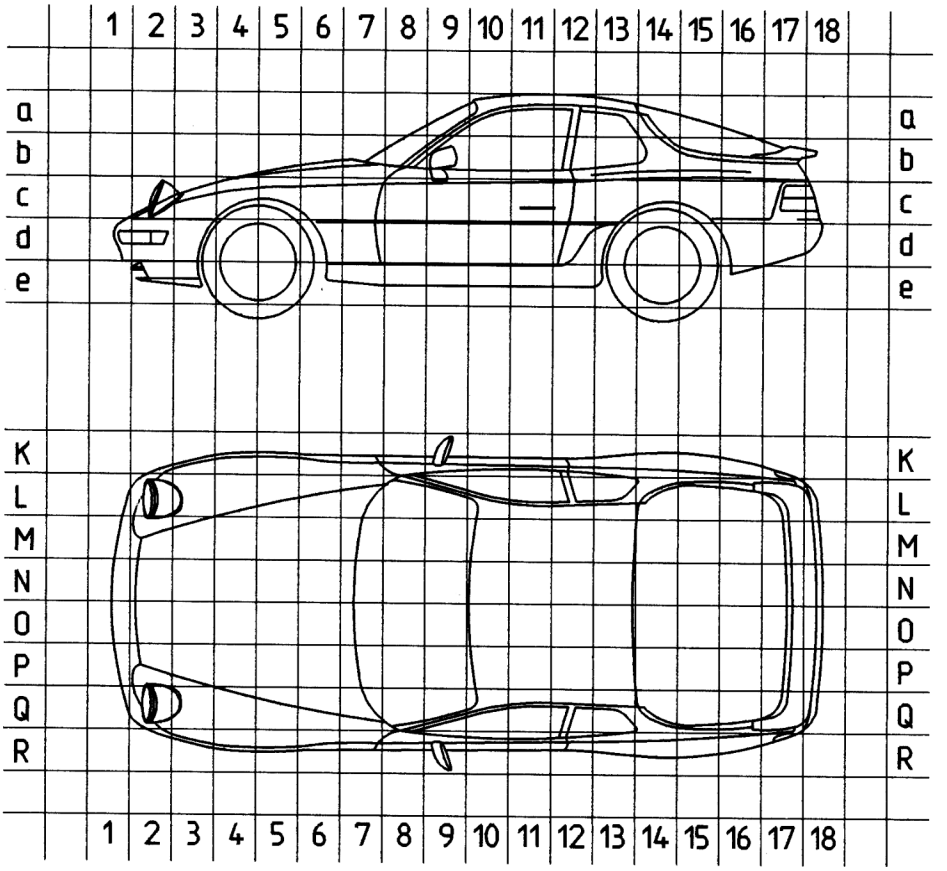

14

L | M | N | O | P

Wiring Diagram Type 968
Model 95

	Coordinates	
Sheet 1	1 - 10	Lights
Sheet 2	11 - 20	Instrument Cluster and Sensor
Sheet 3	21 - 30	Heating, Airconditioning, Ventilating, Power Seats, Wipe- and Wash Cleaners
Sheet 4	31 - 40	Two-Tone Horns, Mirrors, Lifting Roof, Power Window Regulator, Tailgate Unlocking
Sheet 5	41 - 50	Engine Compartment, Cruise Control
Sheet 6	51 - 60	Central Electric
Sheet 7	61 - 70	Central Locks, Alarm System
Sheet 8	71 - 80	Fog Light, Rear Fog Light
Sheet 9	81 - 90	Radio
Sheet 9 a	81 - 90	Radio CS, Sound Package Cabriolet
Sheet 10	91 - 100	ABS, Airbag
Sheet 11	101 - 110	Wiring 968 Cabriolet
Sheet 12	111 - 120	Tiptronic
Sheet 13		Construction Components
Sheet 14		Plug Connections, Ground Points, M-Numbers, Abbreviations

Wiring Diagram Type 968
Model 95

The wiring diagram consists of 13 individual wiring diagrams, 1 sheet construction components and 1 sheet plug connections and ground points. These are divided into coordinate fields.

Each individual wiring diagram contains a part of the central-electrics box in a dashdotted frame.

This part of the central-electrics box shows all the lines and relays necessary for the individual wiring diagram.

The earth/ground points are identified by “GP” and their location is shown in a vehicle diagram.

The 20-pin connectors on the central-electrics box are clipped together out of 5 parts.

Part 1, with the moduled-on fastening lug, is the “starting element”.

Parts 2, 3 and 4 are “module elements”.

Parts 1 to 4 are identified by the numbers 1.....5.

Part 5 is a “coding element”.

The designations of the plug connections in the wiring diagram of the central-electrics box refer to the “starting element” from, for example, B 11.....15, and to the first module element from B 21.....25.

968 MODEL 95 SHEET 1

LIGHTS

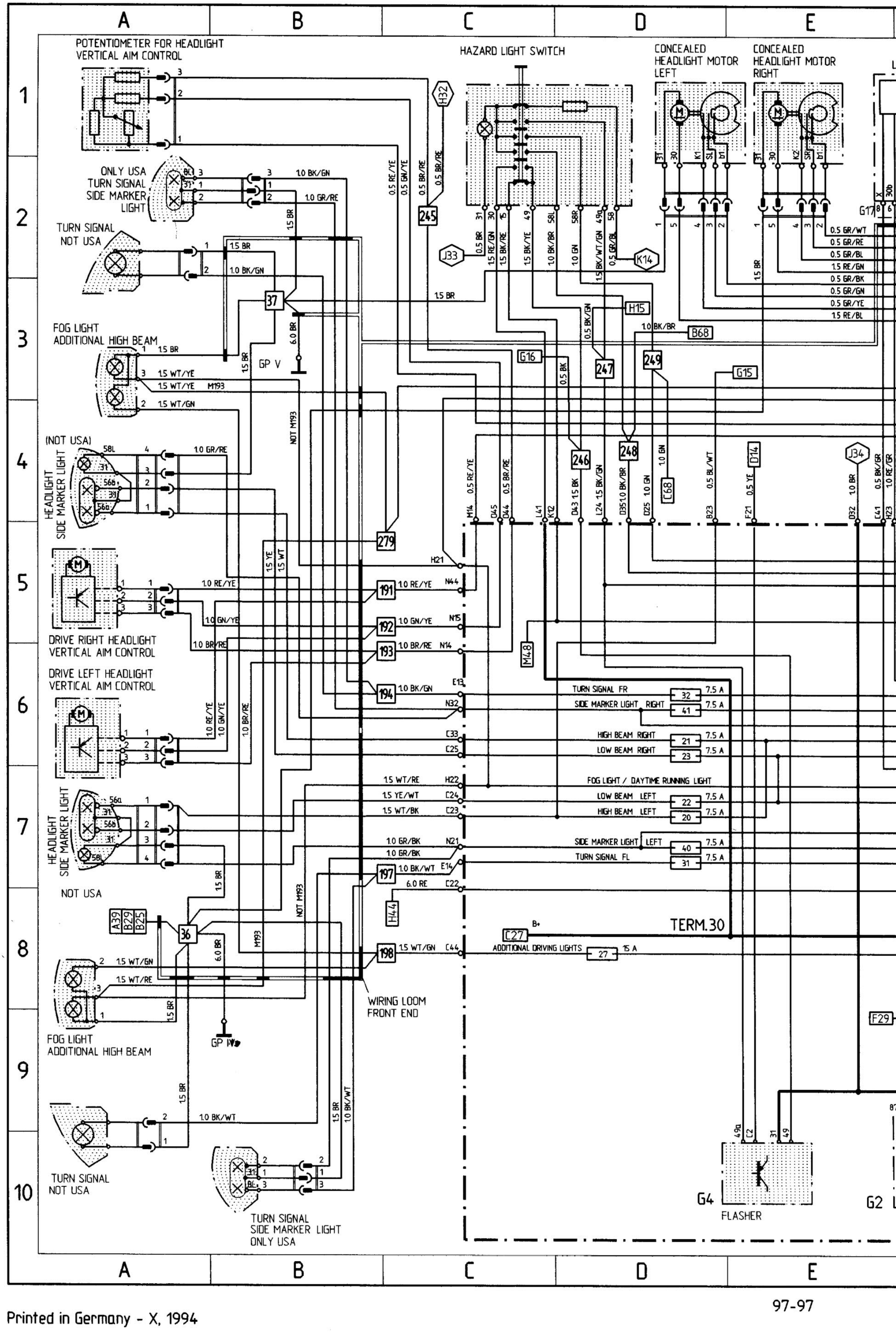

Printed in Germany - X, 1994

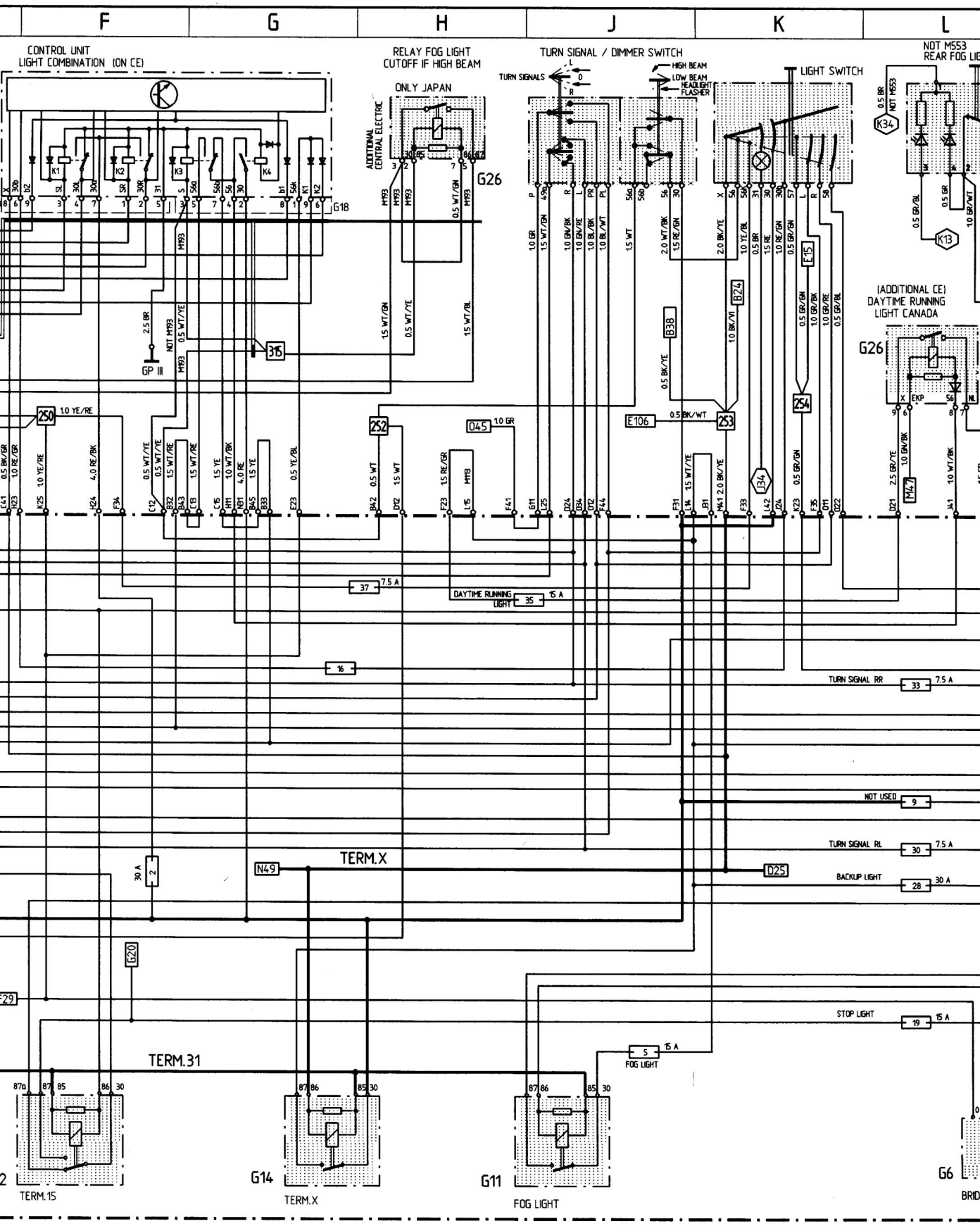

WT = WHITE YE = YELLOW RE = RED VI = VIOLET BL = BLUE GN = GREEN GR = GREY BR = BROWN BK = BLACK

L M N O P

1 2 3 4 5 6 7 8 9 10

NOT M553
REAR FOG LIGHT
J34
0.5 BR
FOG LIGHT
0.5 GR
1.0 GR/WT
1.0 GR
0.5 WT
0.5 GR/BL
0.5 GR/RE
0.5 GR/WT
K13
K14
CE)
NING
DA
NOT M553
56
NL
8
7
1.0 WT/BK
1.5 GR
J41
J11
J15
K35
M32
K24
D22
M34
204
M18
K13
N115
L18
DEFROST
SWITCH LAMP
1.0 BR
J33
1.0 GR
K14
ASHTRAY
LIGHT
1.0 GR
K14
P22
0.5 RE
1.0 BR
K33
HIGH MOUNTED
STOP LIGHT
WIRING LOOM
REAR WINDOW
WIPER MOTOR
0.5 RE
P21
164
0.5 BK/GN
1
1
J33
0.5 BR
2
2
SIDE TURN SIGNAL
1.5 BK/GN
1.0 GR/GN
0.5 GR/GN
0.5 GN/WT
ONLY SAUDI ARABIA
L19
TAIL LIGHT ASSEMBLY
RIGHT
1.0 BK/GN
1
BL
1.0 BK/BL
3
RFL
2
BRL
BGL
0.5 GR/RE
4
BGL
1.0 BR
6
31
5
NSL
1.0 GR/WT
NOT WITH
MARKED LEADS
ARE WIRING LOOM
PASSENGER COMPARTMENT
38
7.5 A
INSTRUMENT LIGHTS
A12
A13
A22
A24
A14
A21
SPARE CONNECTION
7.5 A
7.5 A
30 A
15 A
F25
0.5 BR
2
1
1.0 BR
1.0 GR/GN
1.0 GR/GN
1.0 BR
WL LICENSE
PLATE LIGHTS
2.5 BR
1.0 BR
GP
F33
LICENSE
PLATE LIGHTS
G33
D120
181
M33
M22
0.5 GR/BK
M31
1.0 BK/GN
BACKUP LIGHT SWITCH
STARTER INTERLOCK
K15
1.5 BK/GN
166
1.0 BK/GN
1
M480
2
1.5 BK/BL
1.0 BK/BL
180
1.5 BK/GN
D119
0.5 GR/WT
N46
N116
E97
P117
P23
79
1.0 RE/WT
1.0 RE/WT
G36
STOP LIGHT SWITCH
B24
1.0 BK/GN
259
1.0 BK/GN
F98
1.0 BK/GN
1.0 RE/WT
M23
0.5 GN/BL
L18
B25
1.0 GR
M454
M45
D33
1.0 BK/WT
168
SIDE TURN SIGNAL
0.5 BK/WT
1
1
J34
0.5 BR
2
2
TAIL LIGHT ASSEMBLY
LEFT
G6
0 3 1 6 7 8 4 9 5 2
BRIDGE ADAPTER
31
78
G32
M46
CONNECTING POINT
WELDING POINT CONNECTION
WITH FIELD INDICATION
CONNECTION WITH FIELD DATA
GP GROUND POINT

968 MODEL 95 SHEET 2

INSTRUMENT CLUSTER AND SENSOR

INDICATOR LIGHTS	
1	SIDE MARKER LIGHT
2	PARKING BRAKE
3	SEAT BELT
4	TEMP. INDICATOR
5	BRAKE PAD
6	TRAILER TURN SIGNAL
7	EX
8	FUEL LEVEL INDICATOR
9	INSTRUMENT LIGHTS
10	TURN SIGNALS
11	HIGH BEAM
12	TIPTRONIC
13	BRAKE FLUID
14	ABS CONTROL
15	OIL PRESSURE INDICATOR
16	AIRBAG
17	MALFUNCTION INDICATOR LAMP
18	CHARGE INDICATOR
19	CENTRAL WARN. LIGHT
20	OIL LEVEL INDICATOR
21	WASHING FLUID

ADDITIONAL ELECTRIC IN INSTRUMENT CLUSTER	
1	BRAKE PAD WEAR K1
2	BRAKE PAD WEAR K2
3	TERM.15
4	OIL LEVEL WARNING - INPUT
5	NOT USED
6	OIL LEVEL WARNING - OUTPUT
7	TERM.31
8	BRAKE PAD WEAR OUTPUT
9	NOT USED
10	BRAKE FLUID - INPUT
11	OIL PRESSURE INDICATOR
12	BRAKE FLUID - OUTPUT

CONNECTING POINT

WELDING POINT CONNECTION WITH FIELD INDICATION

CONNECTION WITH FIELD DATA

GP GROUND POINT

NOT WITH ▬ MARKED LEADS ARE WIRING LOOM PASSENGER COMPARTMENT

INSTRUMENT CLUSTER

DISCONNECTING POINT ELECTRONIC

WATER TEMP.

TANK

PLUG A

BRAKE PAD WEAR LEAD FR

GROUND WHELL CARRIER

COMBINATION LEAD

GROUND SIDE MEMBER

SEAT BELT CONTACT

PARKING BRAKE

SPEEDOMETER RESET

FUEL LEVEL SENSOR

BRAKE FLUID RESERVOIR

ONLY JAPAN

TEMP. SENSOR CAT. CONV. ONLY JAPAN

WIRING LOOM FRONT DEND

BRAKE PAD WEAR LEAD FL

G24 ADDITIONAL CENTRAL ELECTRIC

CATALYTIC CONVERTER CONTROL ONLY JAPAN

CENTRAL ELECTRIC

TERM.31

BUZ ONLY SA

97-99

Printed in Germany - X, 1994

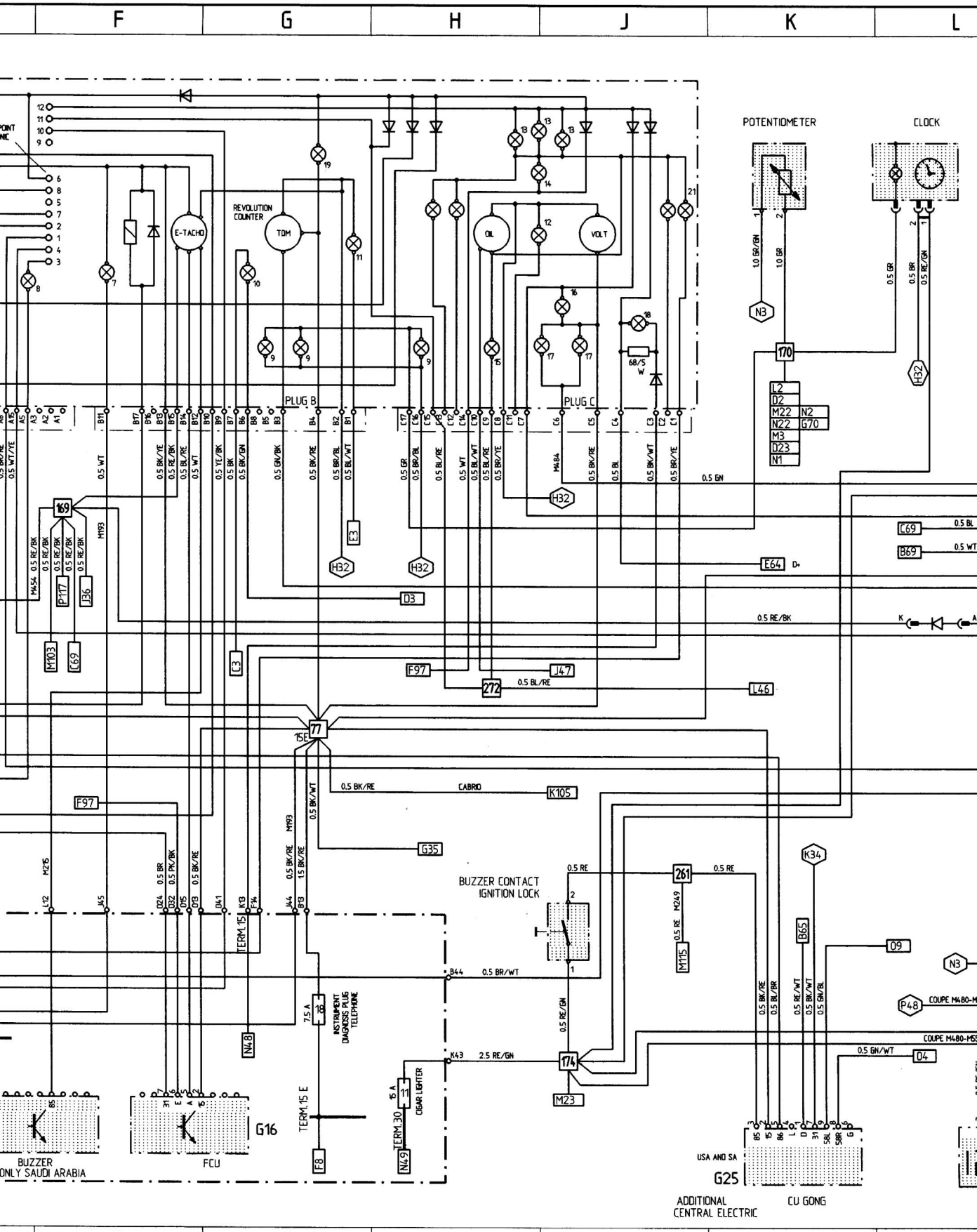
F
G
H
J
K
L
POTENTIOMETER
CLOCK
REVOLUTION COUNTER
E-TACHO
TOM
OIL
VOLT
PLUG B
PLUG C
BUZZER CONTACT IGNITION LOCK
CABRIO
COUPE M480-M
BUZZER ONLY SAUDI ARABIA
FCU
G16
G25
ADDITIONAL CENTRAL ELECTRIC
CU GONG
USA AND SA
INSTRUMENT DIAGNOSIS PLUG TELEPHONE
CIGAR LIGHTER
TERM.15 E
TERM.30
TERM.15
WT = WHITE
YE = YELLOW
RE = RED
VI = VIOLET
BL = BLUE
GN = GREEN
GR = GREY
BR = BROWN
BK = BLACK

L M N O P

11 12 13 14 15 16 17 18 19 20

DIAGNOSIS PLUG

T26

1 2 3 4 5 6 7 8 9 10 11 12 13 14 15 16 17 18 19

0.5 WT 0.5 BL 0.5 BR 0.5 RE/YE 0.5 BK/RE 0.5 GN/BK 0.5 GN 0.5 YE

0.5 YE/RE M562

260

H32

0.5 WT/BK RHD M562 — H95

0.5 YE/RE M562

0.5 YE/RE LHD M562 — H97

J97

0.5 BL RHD M562

T42

LHD M562 0.5 WT 1
LHD M562 0.5 BL 2 — J96

CONNECTION AIRBAG

CONNECTION PASSENGER COMPARTMENT / MFI+DI

T1

173 172 171 282

0.5 GN 13
0.5 BL 11
0.5 WT 10
0.5 GN/BK 4
0.5 BK/YE 12
0.5 GR/RE 9
3
2
1
5
6
8
7
14

F45

0.5 BL — K114
0.5 WT RHD M562 — J96
0.5 BL — L114

A

GP V GP VI GP X GP IX GP I GP IV GP VII GROUND LEAD RHD GP III GP II GP VIII

BRAKE PAD WEAR LEAD RR

1 2

GROUND WHELL CARRIER

T8 1 2 1

COMBINATION LEAD

T9 1 2 1

GROUND SEAT WELL

0.5 BR 0.5 BK

87 86

0.5 BR/WT

85 84

0.5 BR 0.5 BK

GROUND SEAT WELL

T10 1 2 1

COMBINATION LEAD

T11 1 2 1

GROUND WHELL CARRIER

2 1

BRAKE PAD WEAR LEAD RL

314 0.5 BR/BL
313 0.5 BL/GN

11 12 1 T18

0.5 BL/GN 0.5 BR/GN

WL PASSENGER'S DOOR

2 4 16

0.5 VI 0.5 VI

OUTSIDE TEMP. SENSOR

COUPE M480-M553 COUPE M480-M553 COUPE M480-M553

N3 H32

0.5 RE/GN 0.5 GN 0.5 GR/GN 0.5 BR

3 1 2 4
30 15 58 31

CLOCK

N3 H32

P48

0.5 RE/GN 1.0 GN 0.5 BR/GN 0.5 BR 0.5 BR/BL 0.5 BL/GN

1 5 7 2 6 4 3
30 15 58 31 NTC NTC

EXTERIOR TEMPERATURE DISPLAY NOT CS

2

968 MODEL 95 SHEET 3

HEATING, AIR CONDITIONING, VENTILATING, POWER SEATS, WIPE- AND WASH CLEANERS

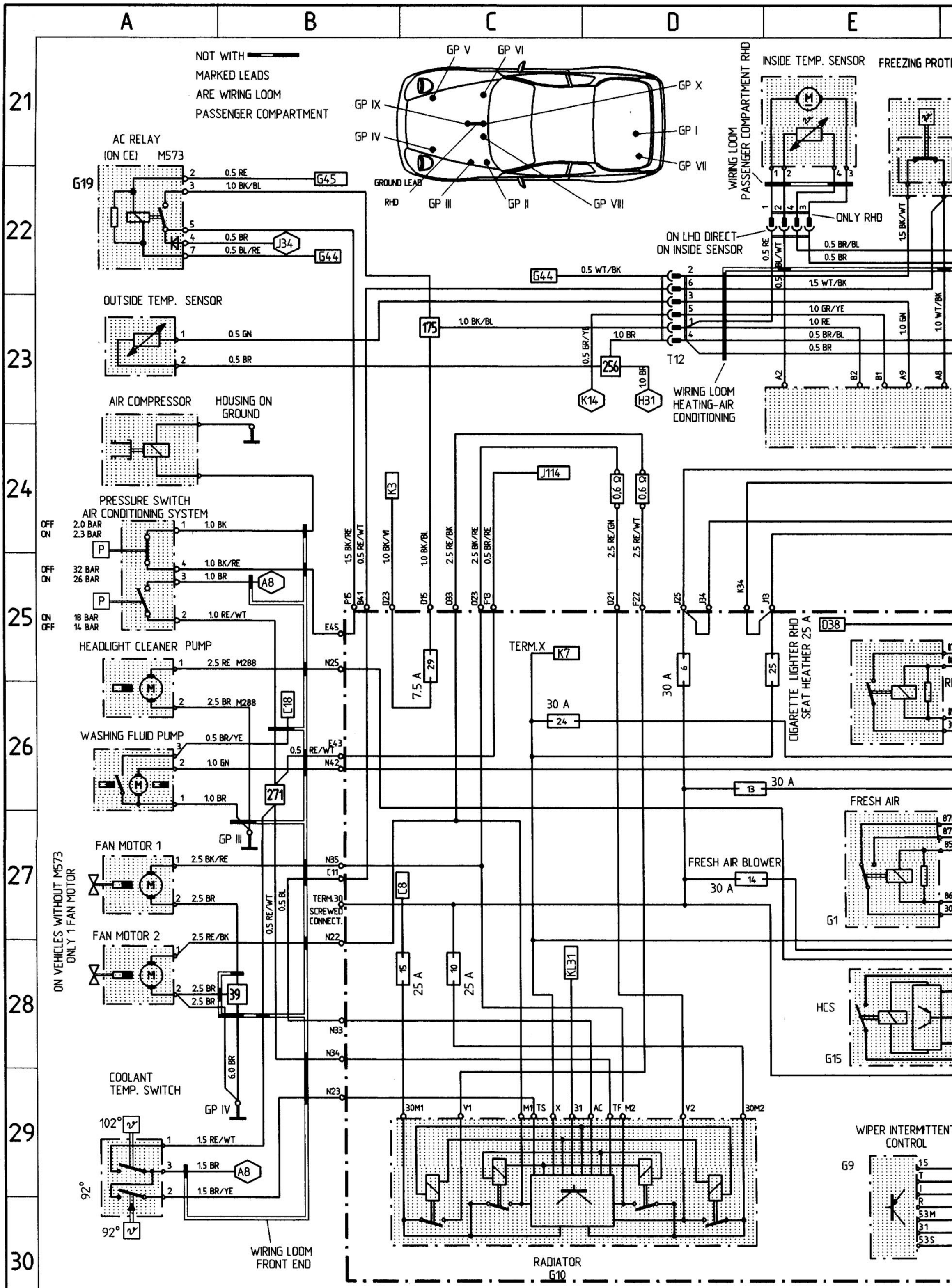

97-101

Printed in Germany - X, 1994

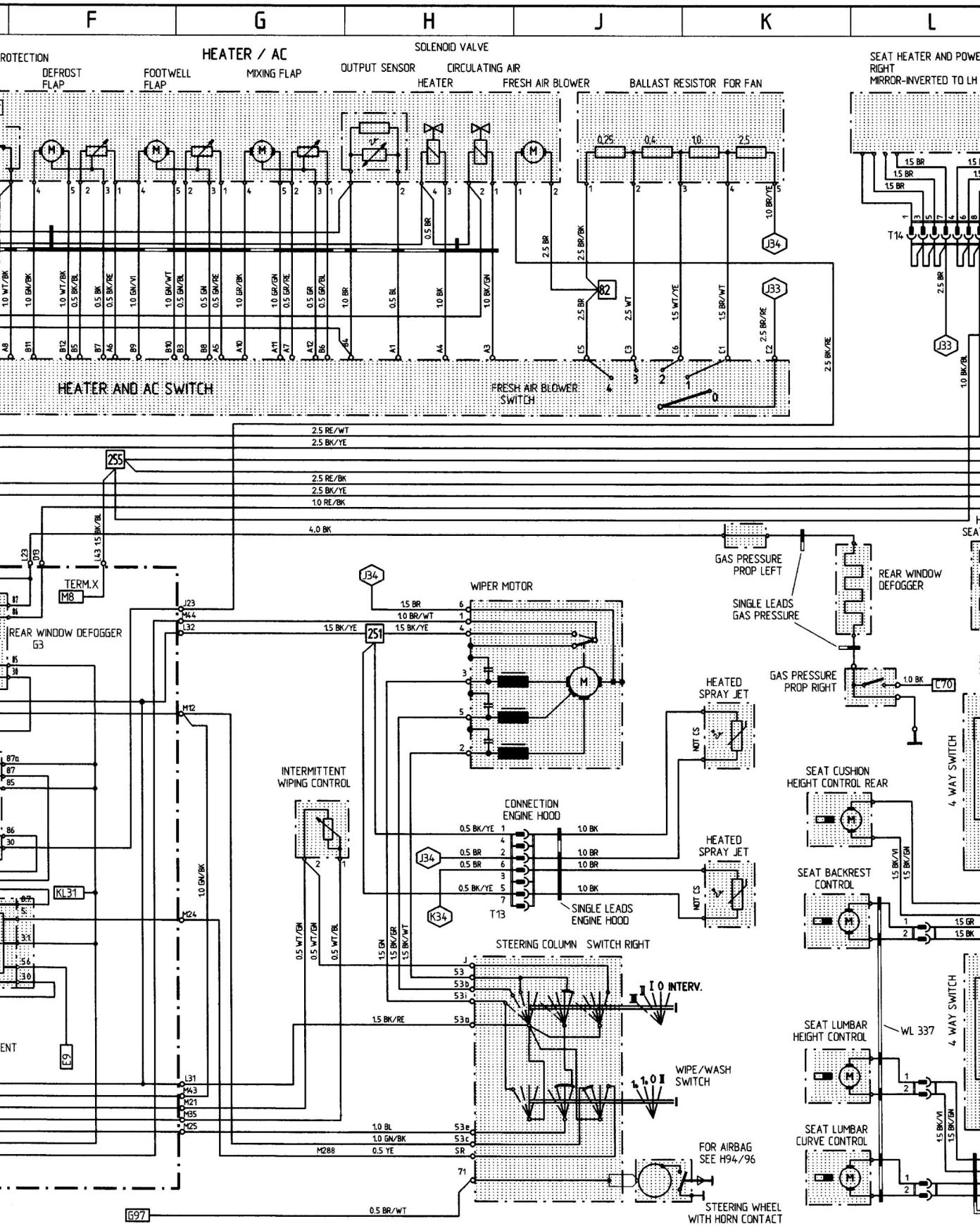
F
G
H
J
K
L
HEATER / AC
SOLENOID VALVE
DEFROST FLAP
FOOTWELL FLAP
MIXING FLAP
OUTPUT SENSOR
CIRCULATING AIR HEATER
FRESH AIR BLOWER
BALLAST RESISTOR FOR FAN
SEAT HEATER AND POWE
RIGHT MIRROR-INVERTED TO LH
HEATER AND AC SWITCH
FRESH AIR BLOWER SWITCH
2.5 RE/WT
2.5 BK/YE
2.5 RE/BK
1.0 RE/BK
4.0 BK
TERM.X
M8
REAR WINDOW DEFOGGER
G3
WIPER MOTOR
GAS PRESSURE PROP LEFT
SINGLE LEADS GAS PRESSURE
REAR WINDOW DEFOGGER
GAS PRESSURE PROP RIGHT
HEATED SPRAY JET
INTERMITTENT WIPING CONTROL
CONNECTION ENGINE HOOD
SINGLE LEADS ENGINE HOOD
SEAT CUSHION HEIGHT CONTROL REAR
4 WAY SWITCH
SEAT BACKREST CONTROL
STEERING COLUMN SWITCH RIGHT
10 INTERV.
WIPE/WASH SWITCH
SEAT LUMBAR HEIGHT CONTROL
WL 337
SEAT LUMBAR CURVE CONTROL
FOR AIRBAG SEE H94/96
STEERING WHEEL WITH HORN CONTACT
WT = WHITE
YE = YELLOW
RE = RED
VI = VIOLET
BL = BLUE
GN = GREEN
GR = GREY
BR = BROWN
BK = BLACK

L M N O P

ER AND POWER SEAT
ERTED TO LH SIDE

CIGAR LIGHTER

REAR WINDOW WIPER

REAR WINDOW DEFOGGER SWITCH

SWITCH FOR REAR WINDOW WIPER

WIRING LOOM REAR WINDOW WIPER MOTOR

CONNECTING POINT
WELDING POINT CONNECTION WITH FIELD INDICATION
CONNECTION WITH FIELD DATA
GP GROUND POINT

HEATER FOR SEAT BACKREST

SEAT CUSHION HEATING

SEAT SIDE ELEMENT HEATING

SEAT HEATER SWITCH

DELAYING RELAY

4 WAY SWITCH

CONNECTION SEAT LEFT T15

WL ON SWITCH

WL 337

SEAT HEIGHT CONTROL FRONT

SEAT BACK FORWARD CONTROL

21 22 23 24 25 26 27 28 29 30

3

968 MODEL 95 SHEET 4

TWO-TONE HORNS, MIRRORS, LIFTING ROOF, POWER WINDOW REGULATOR, TAILGATE UNLOCKING

NOT WITH MARKED LEADS ARE WIRING LOOM PASSENGER COMPARTMENT

MIRROR PASSENGER'S SIDE

DISCONNECTING POINT MIRROR PASSENGER'S SIDE

CHANGEOVER SWITCH

LEADS ONLY RHD EXCHANGE

DISCONNECTING POINT WIRING LOOM DOOR DRIVER'S SIDE OUTSIDE MIRROR

MIRROR SWITCH

DISCONNECTING POINT MIRROR DRIVER'S SIDE

MOTOR POWER WINDOW PASSENGER'S SIDE

WIRING LOOM DOOR PASSENGER'S SIDE

DISCONNECTING POINT WIRING LOOM DOOR PASSENGER OUTSIDE MIRROR

WIRING LOOM DOOR DRIVER'S SIDE

MOTOR POWER WINDOW DRIVER'S SIDE

ADDITIONAL CE

MIRROR ADJUSTMENT

TERM.15

TERM.30

TERM.31

TERM.X

30 A POWER WINDOW REGULATOR

TWO-TONE HORN 1

TWO-TONE HORN 2

WIRING LOOM FRONT END

RELAY TWO-TONE HORNS

RELAY POWER WINDOWS

NOT M553/ NOT M479

CENTRAL ELECTRIC

Printed in Germany - X, 1994

LOCKING

PASSENGER'S SWITCH
PASSENGER'S WINDOW

DRIVER'S SWITCH
PASSENGER'S POWER WINDOW

DRIVER'S SWITCH
DRIVER'S POWER WINDOW

S = CLOSE
OE = OPEN

TAILG. UNLOCK. SWITCH

TAILGATE UNLOCKING SWITCH

TERM.31

TERM.X

TAILGATE UNLOCKING

LHD M562

RHD M562

GP II

GP V GP VI GP X GP IX GP IV GP I GP VII GP III GP II GP VIII GROUND LEAD RHD

GP III

LIFTING ROOF RELAY (ON CE) G21

CONNECTING POINT

WELDING POINT CONNECTION WITH FIELD INDICATION

CONNECTION WITH FIELD DATA

GP GROUND POINT

SWITCH SUN ROOF

LIFTING ROOF MOTOR

LIFTING ROOF CONTROL RELAY

LIFTING ROOF CONTROL RELAY

MICRO SWITCH 1

MICRO SWITCH 2

MICRO SWITCH 3

LIFTING ROOF WIRING LOOM

MICRO SWITCH ROOF

ROOF CLOSED

CONNECTION SUN ROOF FINAL SWITCH

CONNECTION LIFTING ROOF

30 A POWER WINDOW REGULATOR

30 A POWER WINDOW REGULATOR

LIFTING ROOF 25 A

RELAY POWER WINDOWS

M553/M479

WT = WHITE YE = YELLOW RE = RED VI = VIOLET BL = BLUE
GN = GREEN GR = GREY BR = BROWN BK = BLACK

968 MODEL 95 SHEET 5

ENGINE COMPARTMENT, CRUISE CONTROL

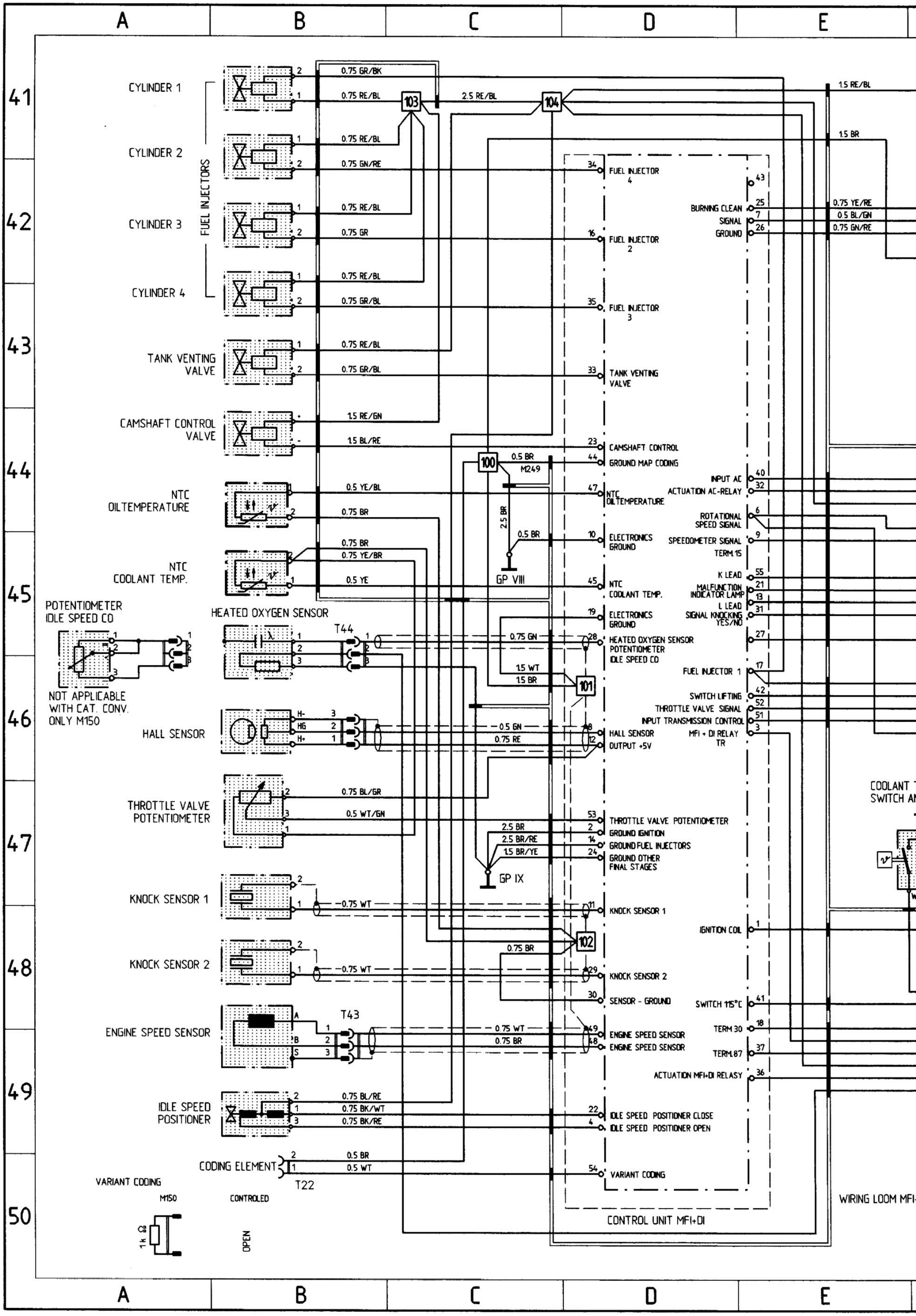

Printed in Germany - X, 1994

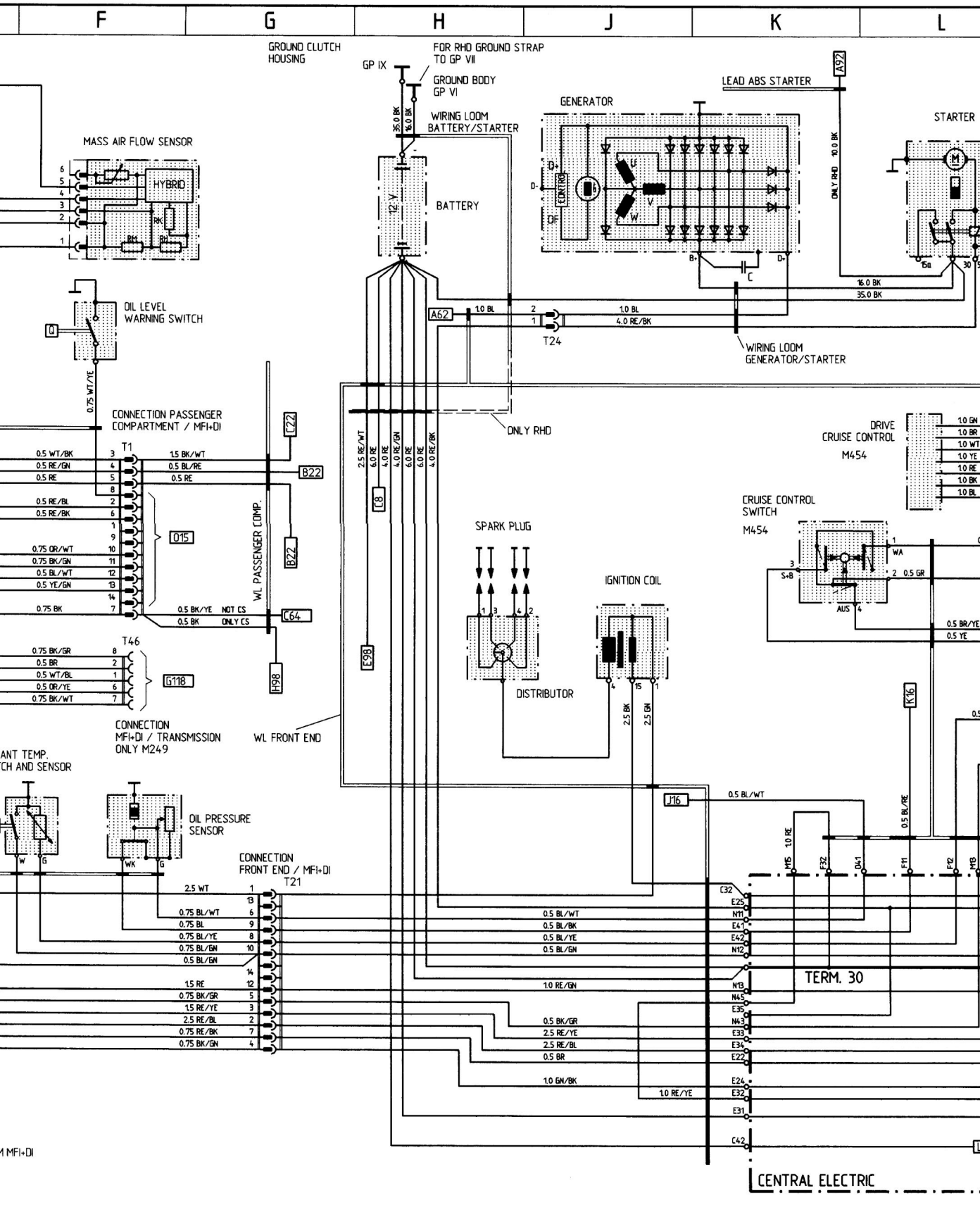

WT = WHITE YE = YELLOW RE = RED VI = VIOLET BL = BLUE GN = GREEN GR = GREY BR = BROWN BK = BLACK

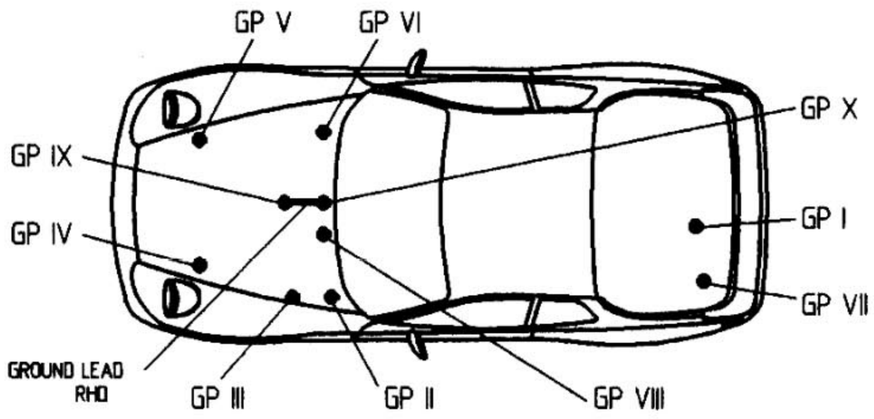

CONNECTING POINT

WELDING POINT CONNECTION WITH FIELD INDICATION

CONNECTION WITH FIELD DATA

GP GROUND POINT

STARTER

WIRING LOOM PASSENGER COMPARTMENT

IGNITION LOCK

M454 CRUISE CONTROL CONTROL UNIT

M454 CLUTCH SWITCH

G20 ONLY M249 (ON CE)

ADDITIONAL CE

START LOCK

FUEL PUMP

T45

FUEL PUMP HEATED OXYGEN SENSOR

MFI + DI RELAY

REL. G13 TERM. 86

WIRING DIAGRAM 97-105

968 MODEL 95 SHEET 6

CENTRAL ELECTRIC

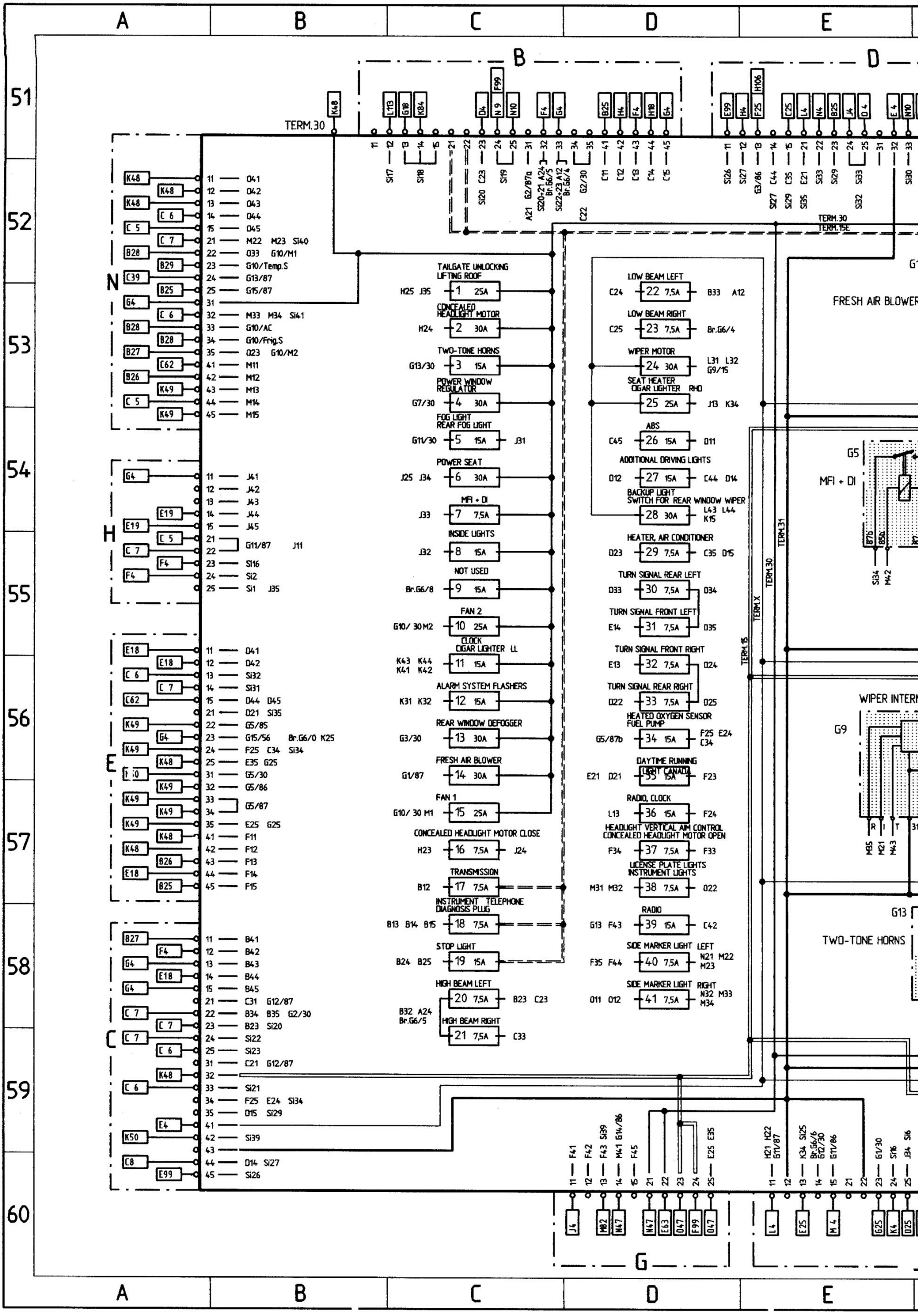

97-107

Printed in Germany - X, 1994

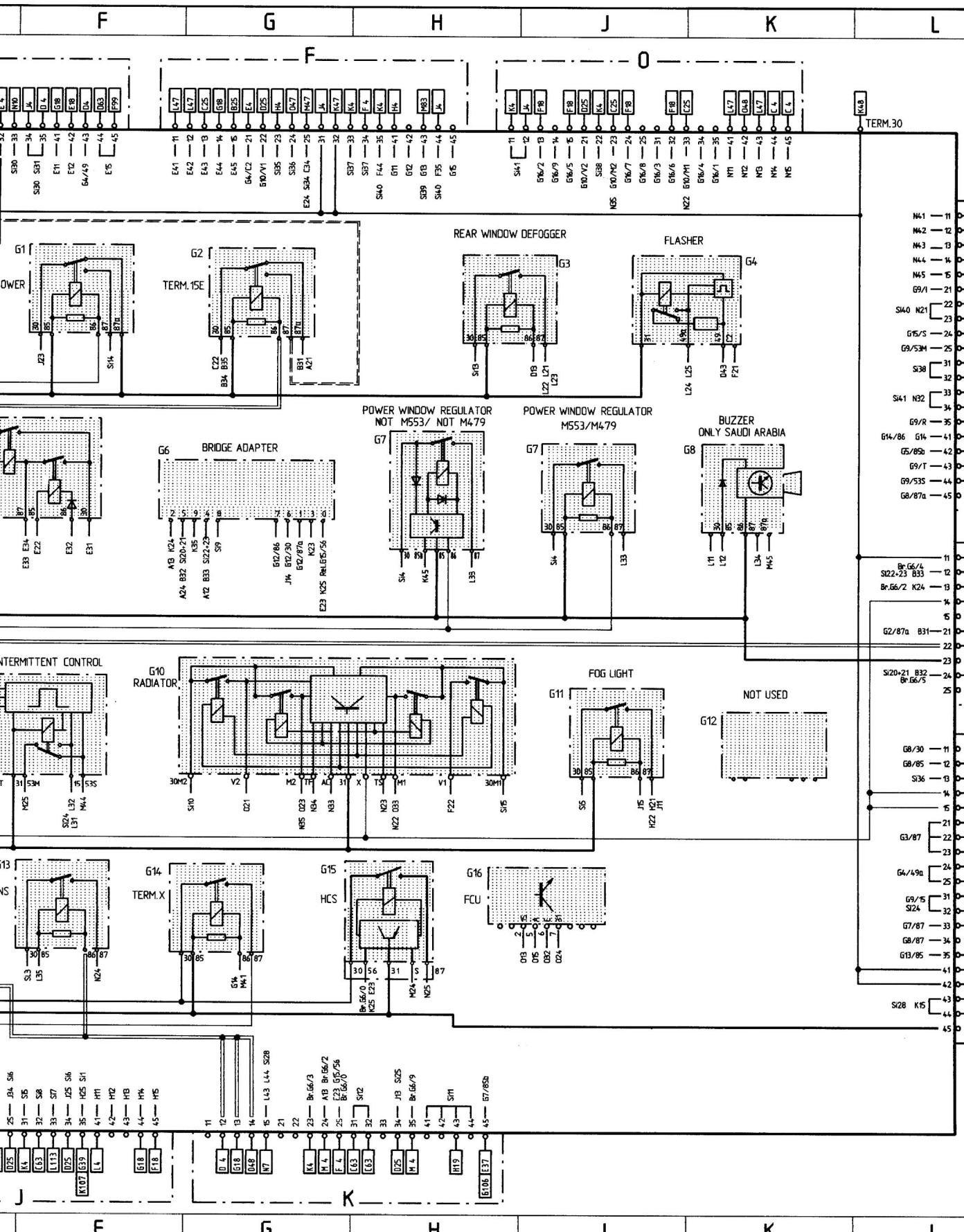
F
G
H
J
K
L
TERM.30
REAR WINDOW DEFOGGER
FLASHER
G1
G2
TERM.15E
G3
G4
POWER WINDOW REGULATOR
NOT M553/ NOT M479
POWER WINDOW REGULATOR
M553/M479
BUZZER
ONLY SAUDI ARABIA
G6
BRIDGE ADAPTER
G7
G8
INTERMITTENT CONTROL
G10
RADIATOR
FOG LIGHT
NOT USED
G11
G12
G13
G14
TERM.X
G15
HCS
G16
FCU

L | M | N | O | P

51 | 52 | 53 | 54 | 55 | 56 | 57 | 58 | 59 | 60

CONTROL UNIT LIGHT COMBINATION

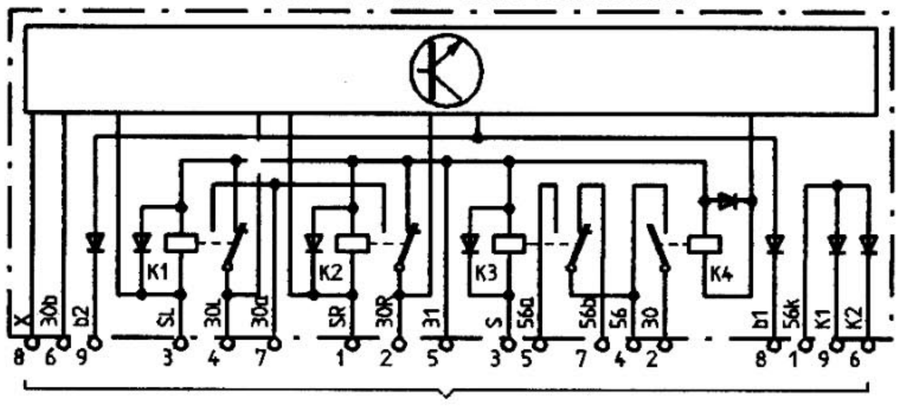

FG1/2

AC RELAY

G19

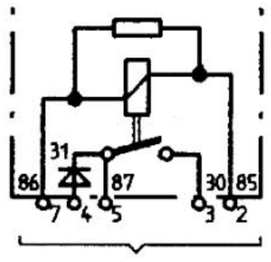

A22

START LOCK

G20

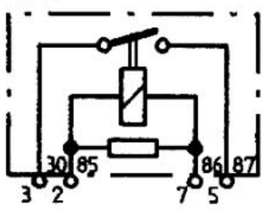

OP43/44

LIFTING ROOF

G21

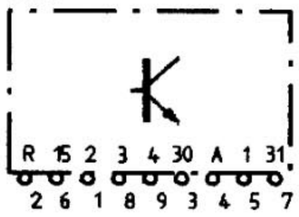

H35

POWER TOP

G21

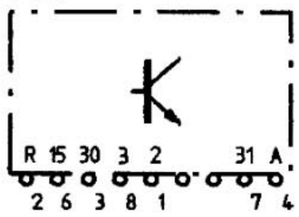

L104

ABS

G22

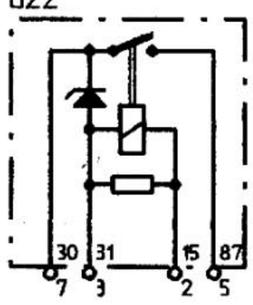

E99/100

ADDITIONAL CE

G23 P/N LOCK

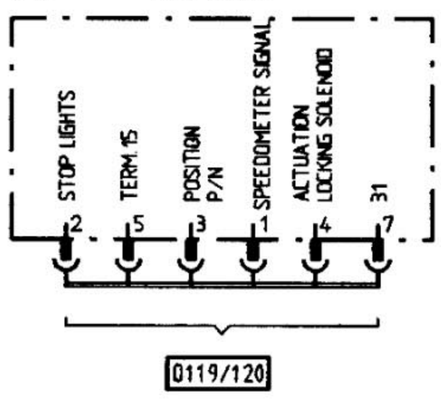

D119/120

CATALYTIC CONVERTER CONTROL

G24

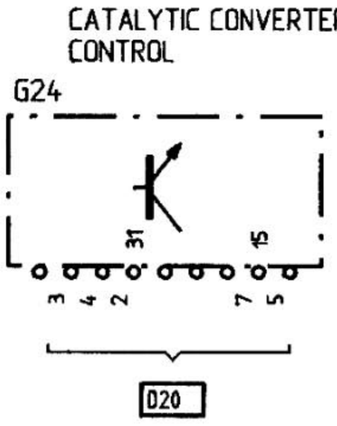

D20

CU GONG

G25

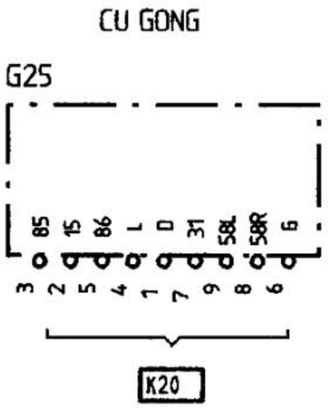

K20

DAYTIME RUNNING LIGHT CANADA

G26

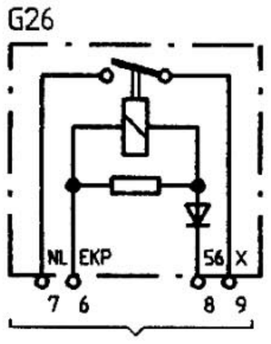

L3/4

FOG LIGHT SWITCH OFF JAPAN

G26

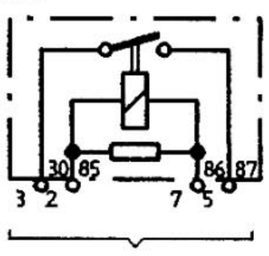

H1

P/N LOCK
42 7.5A — P44

MIRROR ADJUSTMENT
43 7.5 A — C38

TELEPHONE
44 — K83

NOT USED
45

NOT USED
46

NOT USED
47

L
F18
D48
K4
H4
C37 H106
D37 J106
F25 H106
D4
J4
G29
G25
E37 F106
D37
C4
K4
F25 H106

M
11 L82
12 N5
13 N5
14 N6
15
21 N7
22 N5
23
24 N6
25

A
11
12 F18
13 D48
14 K4
15 H4
21 C37 H106
22 D37 J106
23 F25 H106
24 D4
25 J4
31 G29
32 G25
33 E37 F106
34
35 D37
41 C4
42 K4
43 F25 H106
44
45

N41 11 D63
N42 12 G26
N43 13 L47
N44 14 C4
N45 15 K47
G9/1 21 G29
N21 22 N7
23 N9
S/S 24 G28
53M 25 G30
Si38 31 N7
32 M4
N32 33 N7
34 N4
9/R 35 G30
G14 41 K4
85b 42 M47
9/T 43 G29
53S 44 G25
87a 45

ABREVIATIONS OUTSIDE

FOR INST.: E 2 CONNECTION WITH FIELD DATA

E 8 → DRAWING LEADS TO EX. E 8

ABREVIATIONS INSIDE

FOR INST.: C3 =PLUG CONNECTION
G1 - G22 = RELAY
SI = FUSE
Br = BRIDGE ADAPTER

TERM.31
TERM.15
TERM.15E
TERM.X
TERM.30

6

L | M | N | O | P

968 MODEL 95 SHEET 7

CENTRAL LOCKS, ALARM SYSTEM

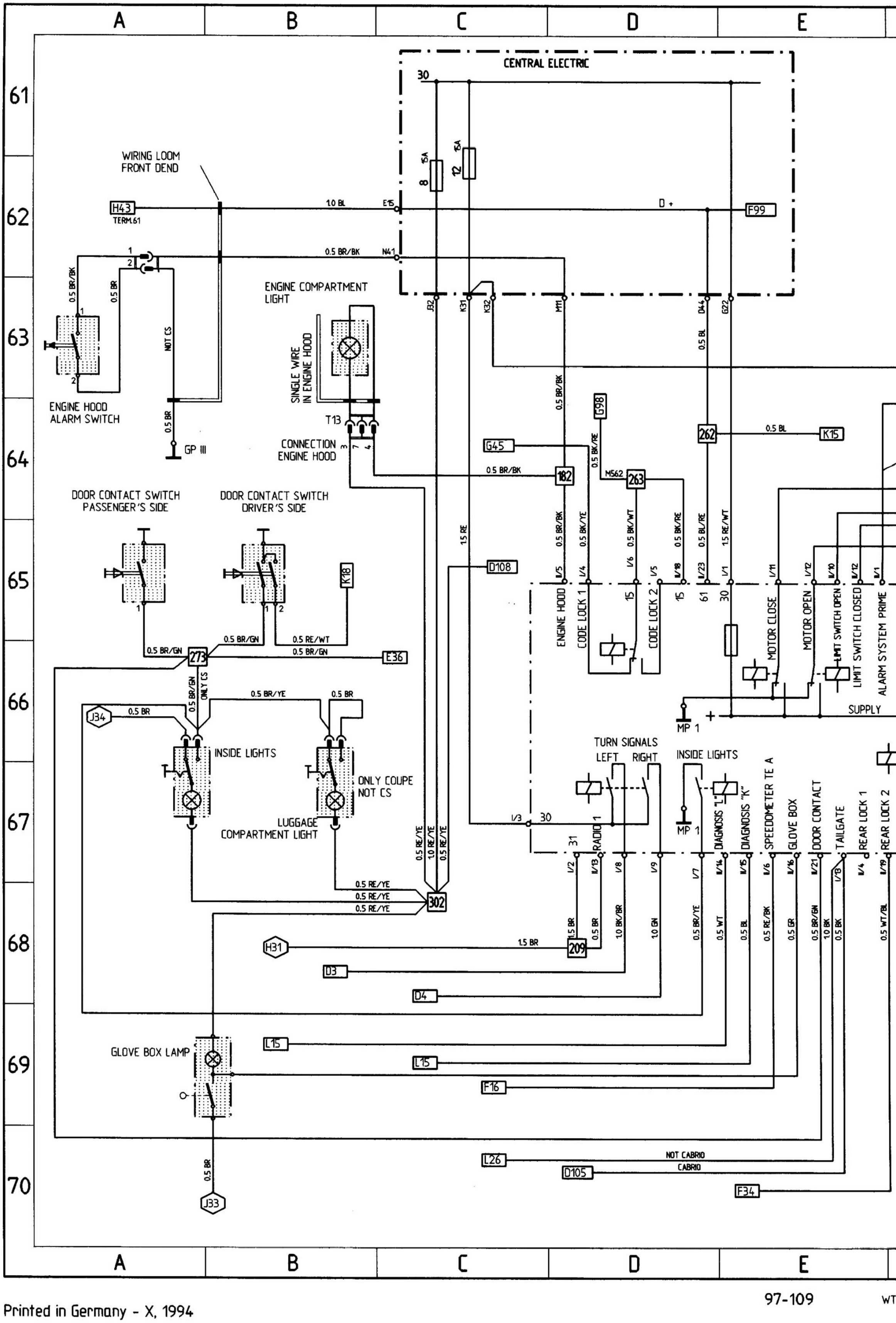

Printed in Germany - X, 1994

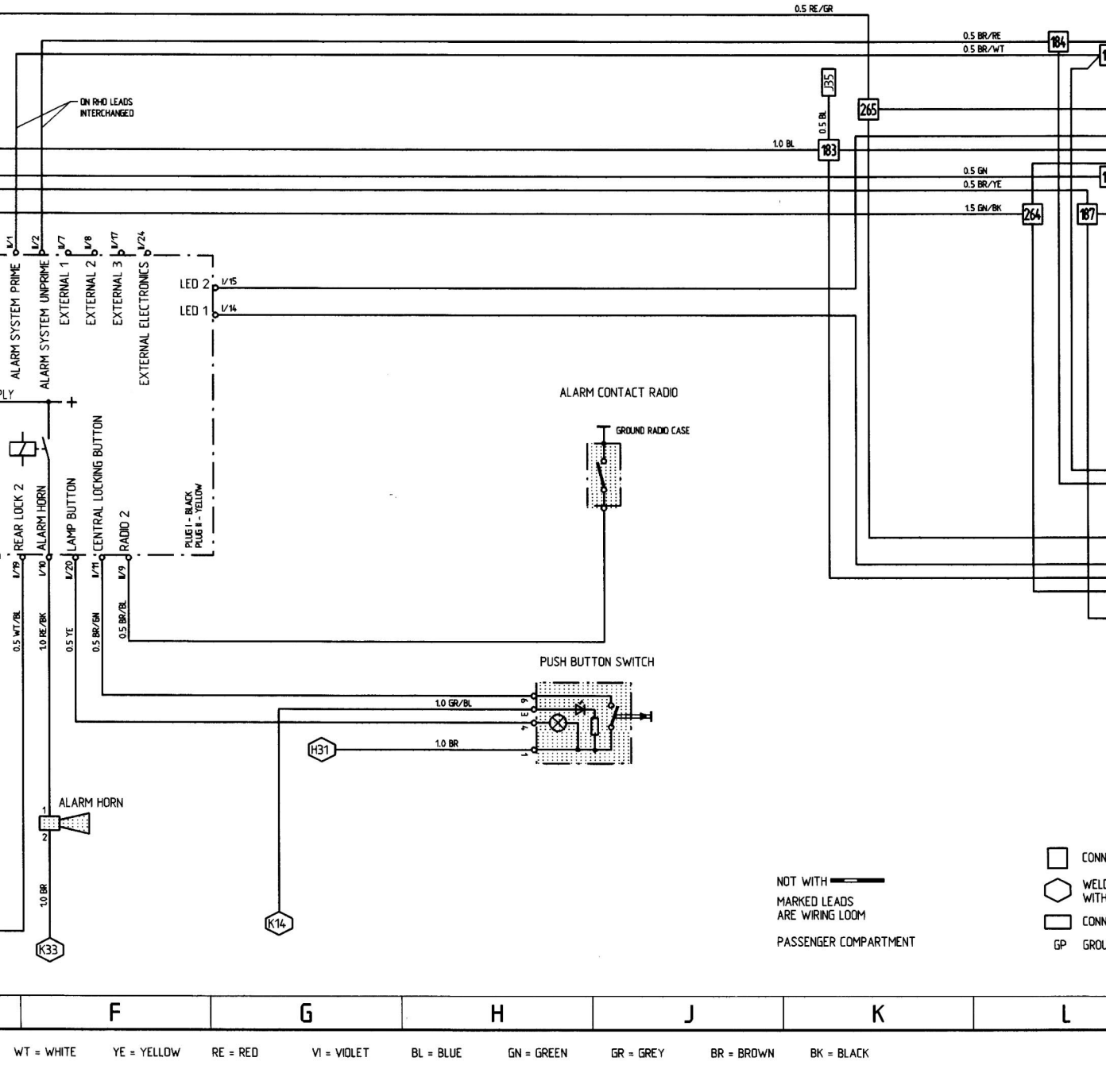
F
G
H
J
K
L
0.5 RE/GR
0.5 BR/RE
0.5 BR/WT
184
J135
0.5 BL
265
1.0 BL
183
ON RHD LEADS INTERCHANGED
0.5 GN
0.5 BR/YE
1.5 GN/BK
264
187
ALARM SYSTEM PRIME
ALARM SYSTEM UNPRIME
EXTERNAL 1
EXTERNAL 2
EXTERNAL 3
EXTERNAL ELECTRONICS
LED 2
LED 1
ALARM CONTACT RADIO
GROUND RADIO CASE
REAR LOCK 2
ALARM HORN
LAMP BUTTON
CENTRAL LOCKING BUTTON
RADIO 2
PLUG I - BLACK
PLUG II - YELLOW
0.5 WT/BL
1.0 RE/BK
0.5 YE
0.5 BR/GN
0.5 BR/BL
PUSH BUTTON SWITCH
1.0 GR/BL
1.0 BR
H31
ALARM HORN
1.0 BR
K33
K14
NOT WITH
MARKED LEADS ARE WIRING LOOM
PASSENGER COMPARTMENT
CONN
WELD WITH
CONN
GP GROU
F
G
H
J
K
L
WT = WHITE
YE = YELLOW
RE = RED
VI = VIOLET
BL = BLUE
GN = GREEN
GR = GREY
BR = BROWN
BK = BLACK

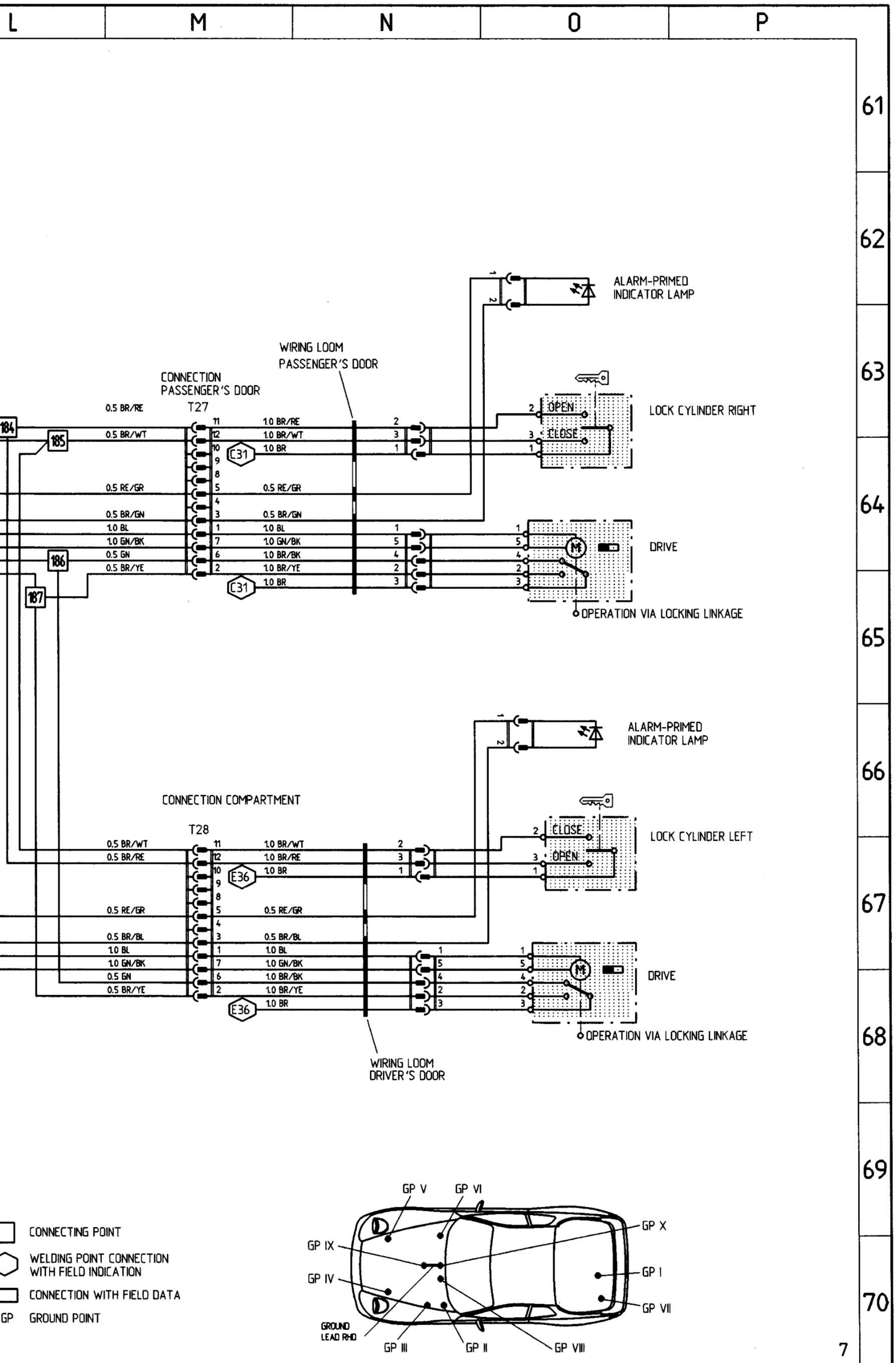

61 62 63 64 65 66 67 68 69 70

7

968 MODEL 95 SHEET 8

FOG LIGHT, REAR FOG LIGHT

FOG LIGHT- AND REAR FOG LIGHT- WIRING

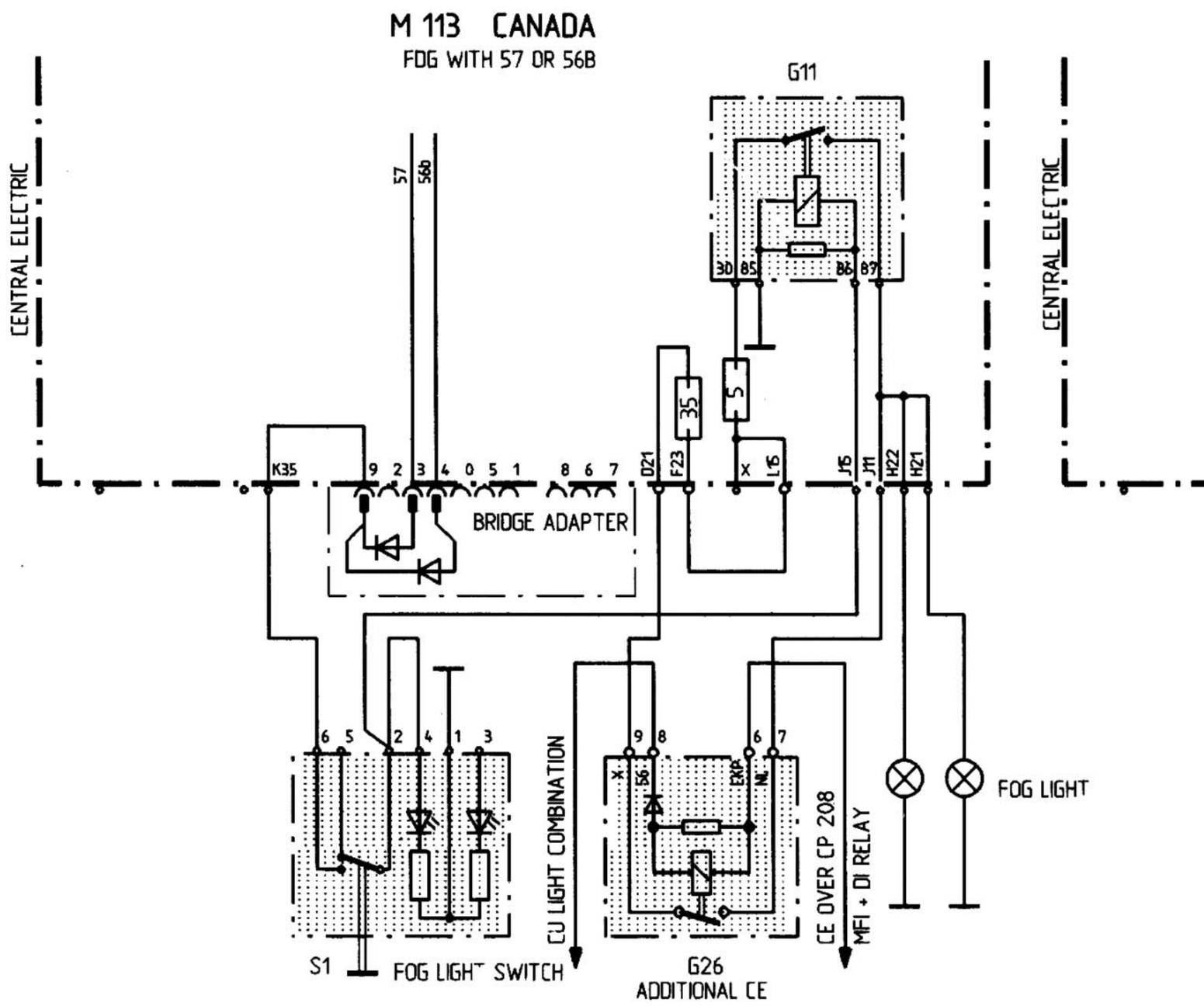

Printed in Germany - X, 1994

E | F | G | H | J | K

71 72 73 74 75 76 77 78 79 80

VIRING

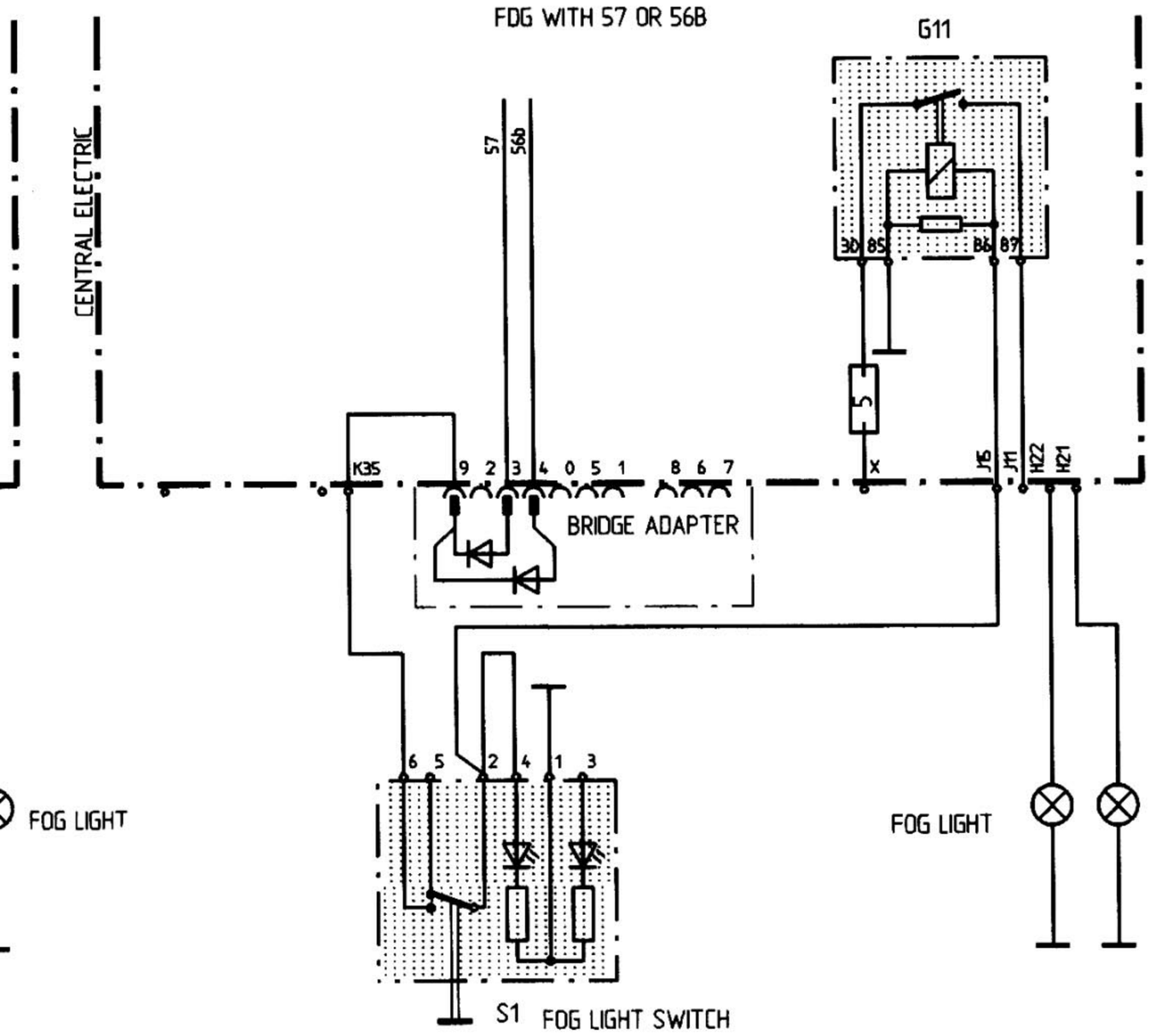

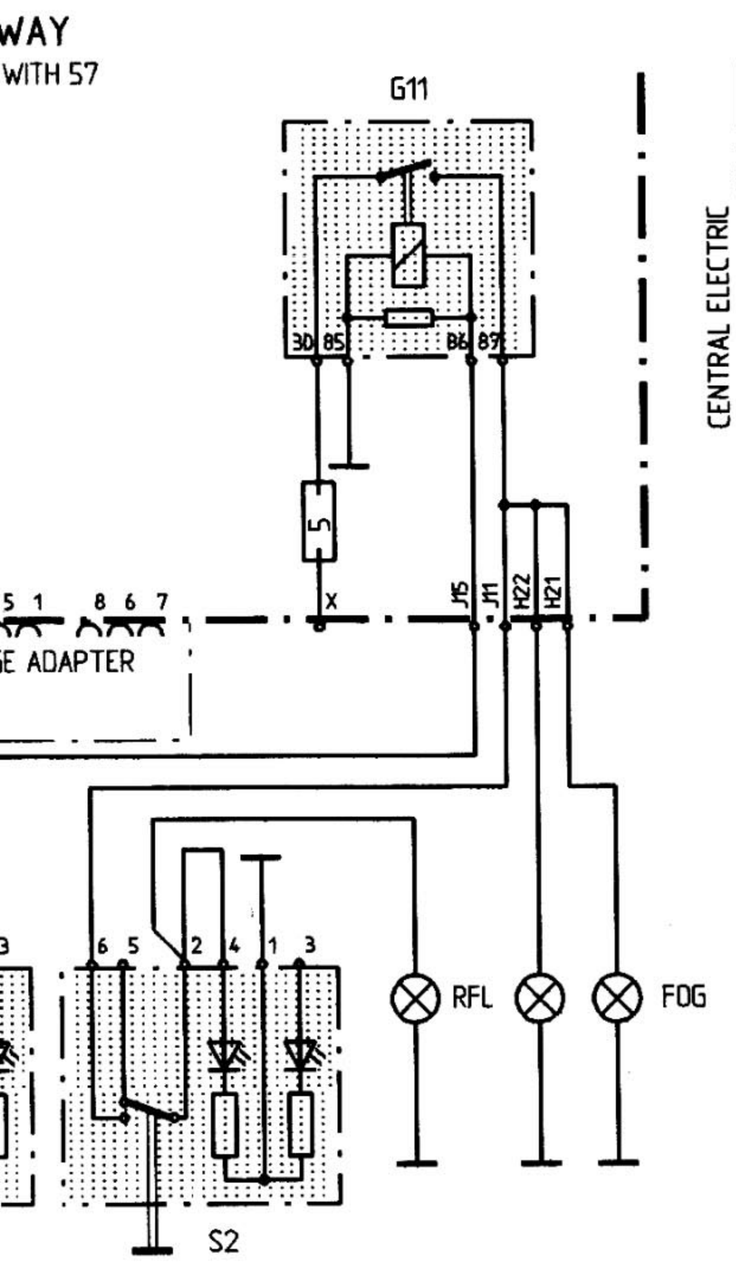

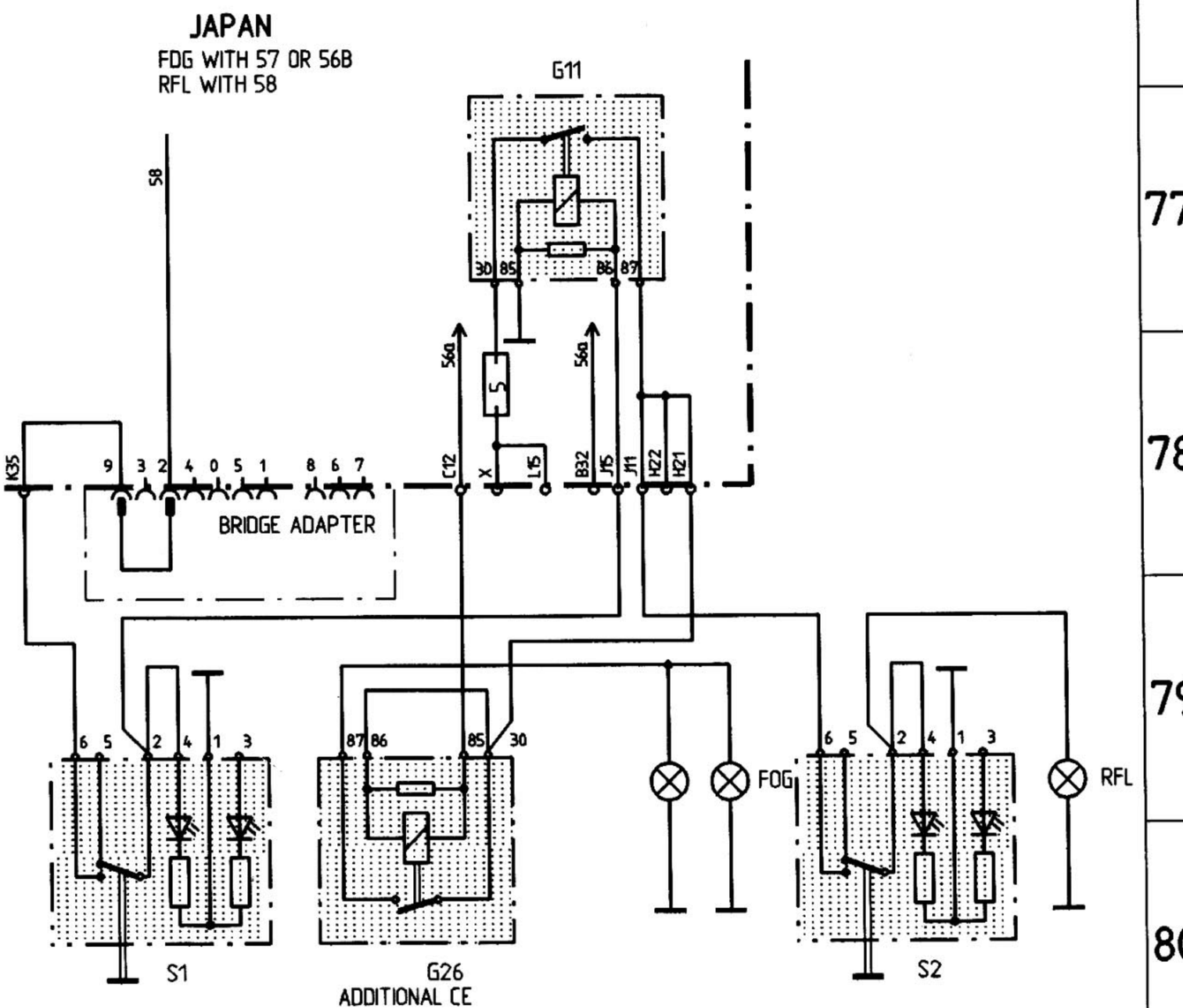

968 MODEL 95 SHEET 9

RADIO

RADIO WITH SOU
M49

ROOF ANTENNA
NOT CABRIO

ANTENNA AMPLIFIER

ANTENNA
WINDSHIELD
ONLY CABRIO

T29
1
0.5 RE/BK

ANTENNA
EXTENSION WIRE

ROW
M334 + M692
CD - CHANGER

INTERFACE

CONNECTION 8-WIRE
RADIO – CD - CHANGER

USA/JAPAN
M334 + M692
CD - CHANGER

HIGH RANGE
RADIO SPEAKER

MIDDLE RANGE
SPEAKER

SEPARATING
FILTER

DEEP RANGE
SPEAKER

CONNECTION
FREQUENCY SWITCH

1.5 BR/YE
1.5 YE
1.5 BR/RE
1.5 RE
1.5 WT
1.5 BR/WT

DOOR WIRING LOOM
DRIVER'S SIDE

T19
CONNECTION DOOR
WIRING LOOM
DRIVER'S SIDE

WIRING LOOM
PASSENGER COMPARTMENT

Ant. 30a
+R
30
31
RL
LF
GROUND
RR
1.0 BR
1.0 GN/RE
1.0 BK/WT
1.0 BK/GN

1.5 BR/WT
1.5 WT

DEEP RANGE
SPEAKER
REAR LEFT

1.5 BR/WT
1.5 RE/YE

WIDE-BAND LOUDSPEAKE

WL SOUND PACKAGE - COUPE

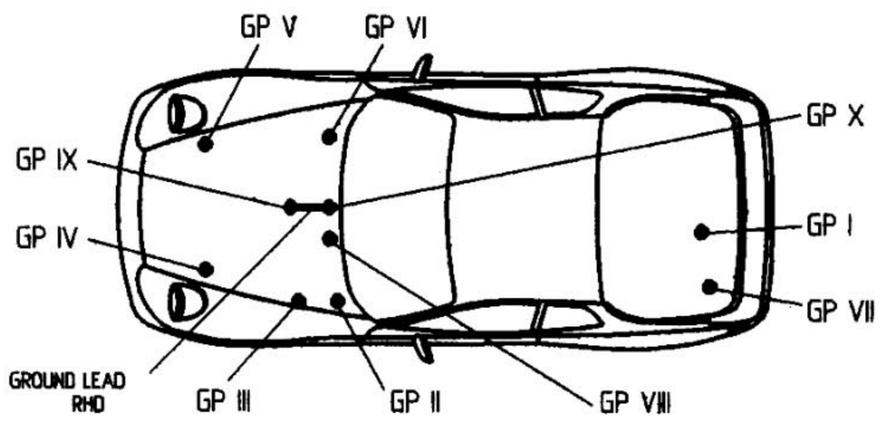

Printed in Germany - X, 1994

SOUND PACKAGE COUPE
490

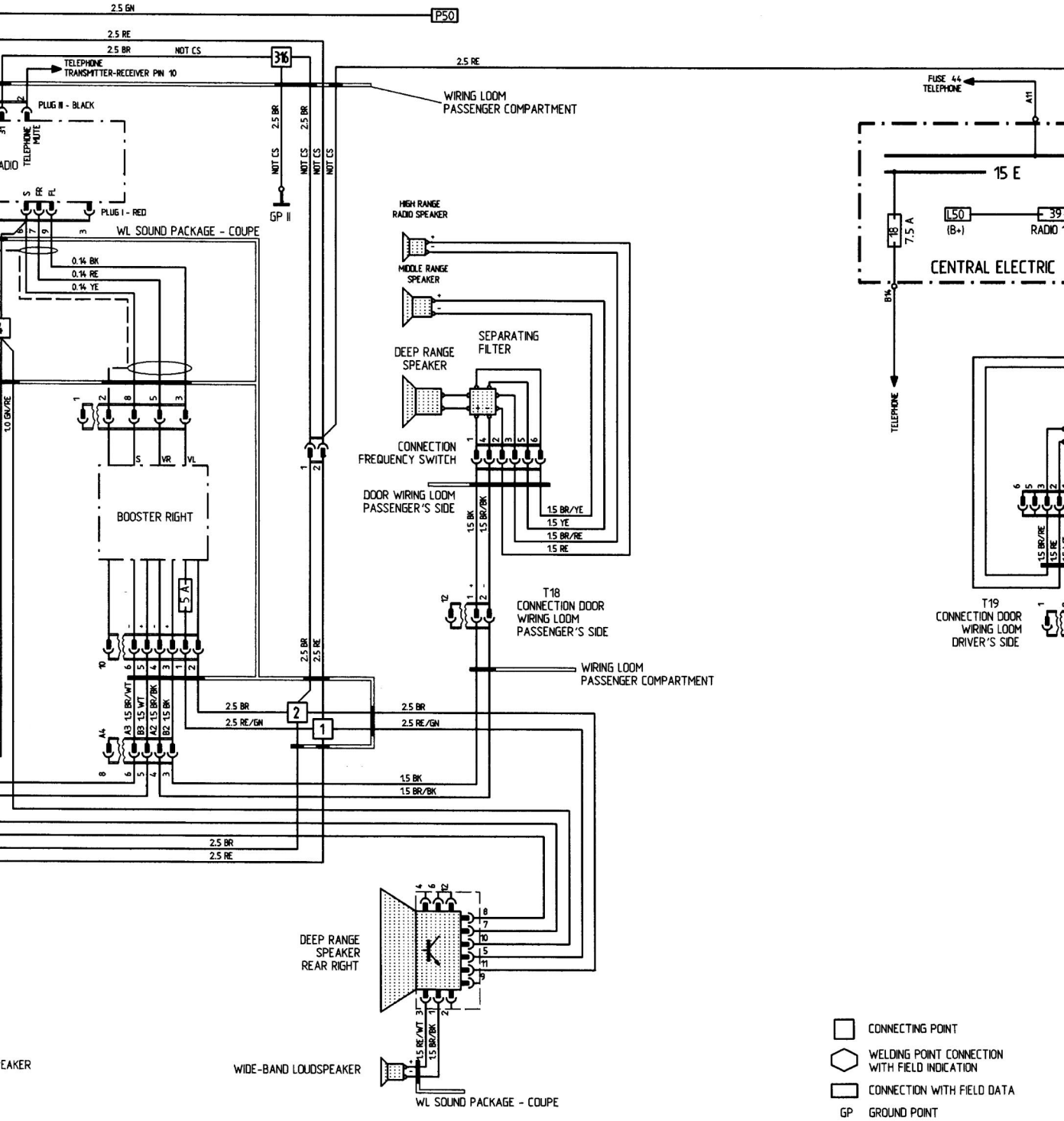

CONNECTING POINT

WELDING POINT CONNECTION WITH FIELD INDICATION

CONNECTION WITH FIELD DATA

GP GROUND POINT

WT = WHITE YE = YELLOW RE = RED VI = VIOLET BL = BLUE GN = GREEN GR = GREY BR = BROWN BK = BLACK

L | M | N | O | P

RADIO

OOSTER CONNECTION 1
NOT USED)

2.5 RE
2.5 BR
2
P50
2.5 GN
2.5 RE
2.5 BR
316
G18
A11
30
39
RADIO 15A
F43
CTRIC
GP II

WIRING LOOM
PASSENGER COMPARTMENT

0.5 RE/BK
T29

TELEPHONE
TRANSMITTER-RECEIVER
PIN 10

PLUG III - BLACK
TELEPHONE MUTE
31
30
R
Ant 30a

RADIO

FL FR RL RR
PLUG II - BROWN
1 6 5 4 3 8 7 2 1

CD - CHANGER

ANTENNA
WINDSHIELD
ONLY CABRIO

ROOF ANTENNA
NOT CABRIO

ANTENNA
AMPLIFIER

1

ANTENNA
EXTENSION WIRE

HIGH RANGE
RADIO SPEAKER

DEEP RANGE
SPEAKER

5 3 2 1 4
CONNECTION
FREQUENCY SWITCH

1.5 BR/RE
1.5 RE
1.5 WT
1.5 BR/WT

DOOR WIRING LOOM
DRIVER'S SIDE

1 9 14

WIRING LOOM
PASSENGER COMPARTMENT

1.5 BR/WT
1.5 WT
1.5 BR/YE NOT CS
1.5 YE NOT CS

SPEAKER RL
NOT CS

HIGH RANGE
RADIO SPEAKER

DEEP RANGE
SPEAKER

1 4 2 3 5 6
CONNECTION
FREQUENCY SWITCH

1.5 BK
1.5 BR/BK
1.5 RE
1.5 BR/RE

DOOR WIRING LOOM
PASSENGER'S SIDE

12 1 2
T18
CONNECTION DOOR
WIRING LOOM
PASSENGER'S SIDE

1.5 BK
1.5 BR/BK
1.5 RE NOT CS
1.5 BR/RE NOT CS

SPEAKER RR
NOT CS

81 82 83 84 85 86 87 88 89 90

9

L | M | N | O | P

968 MODEL 95 SHEET 9a

RADIO CS, SOUND PACKAGE CABRIO

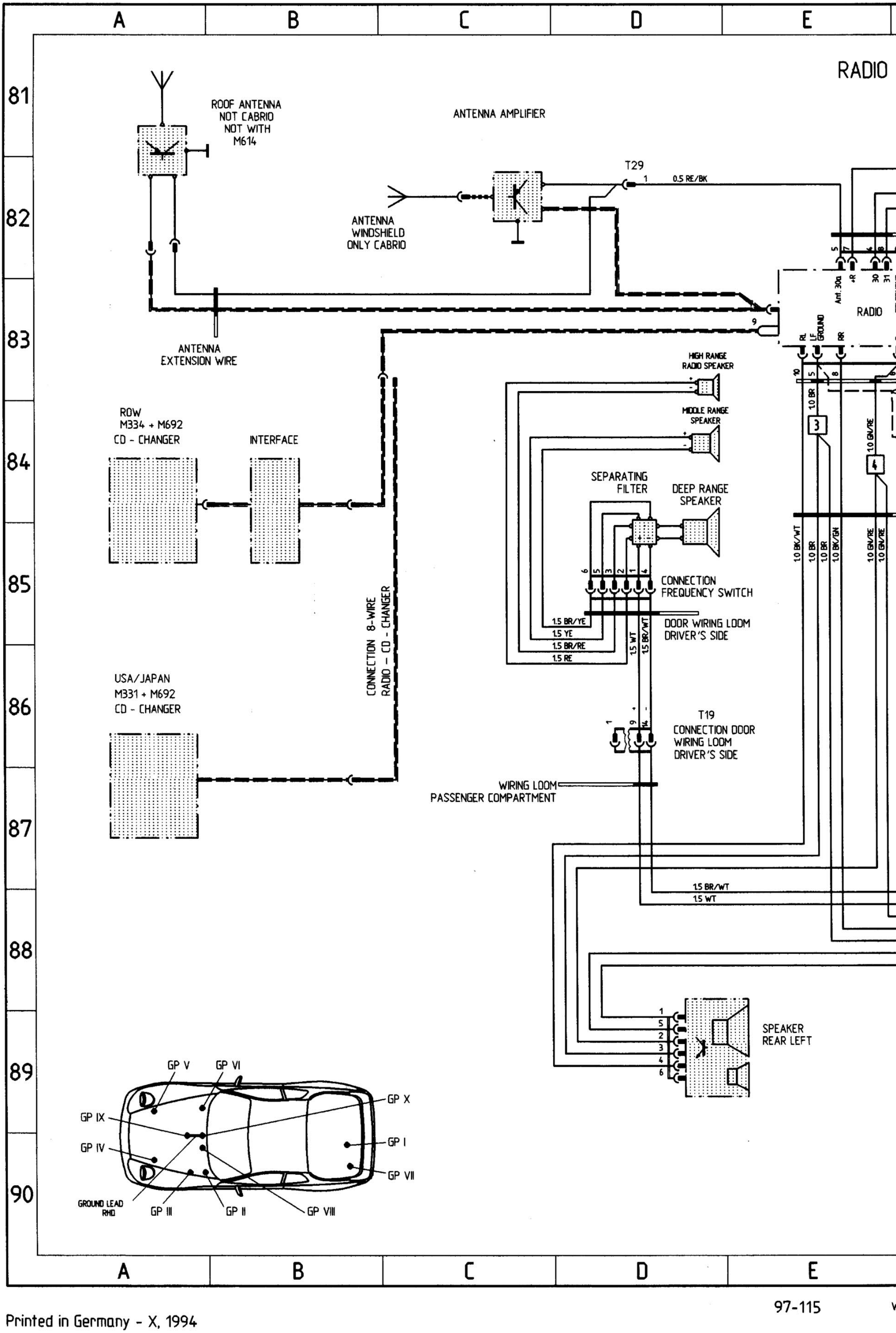

Printed in Germany - X, 1994

RADIO WITH SOUND PACKAGE CABRIO
M490

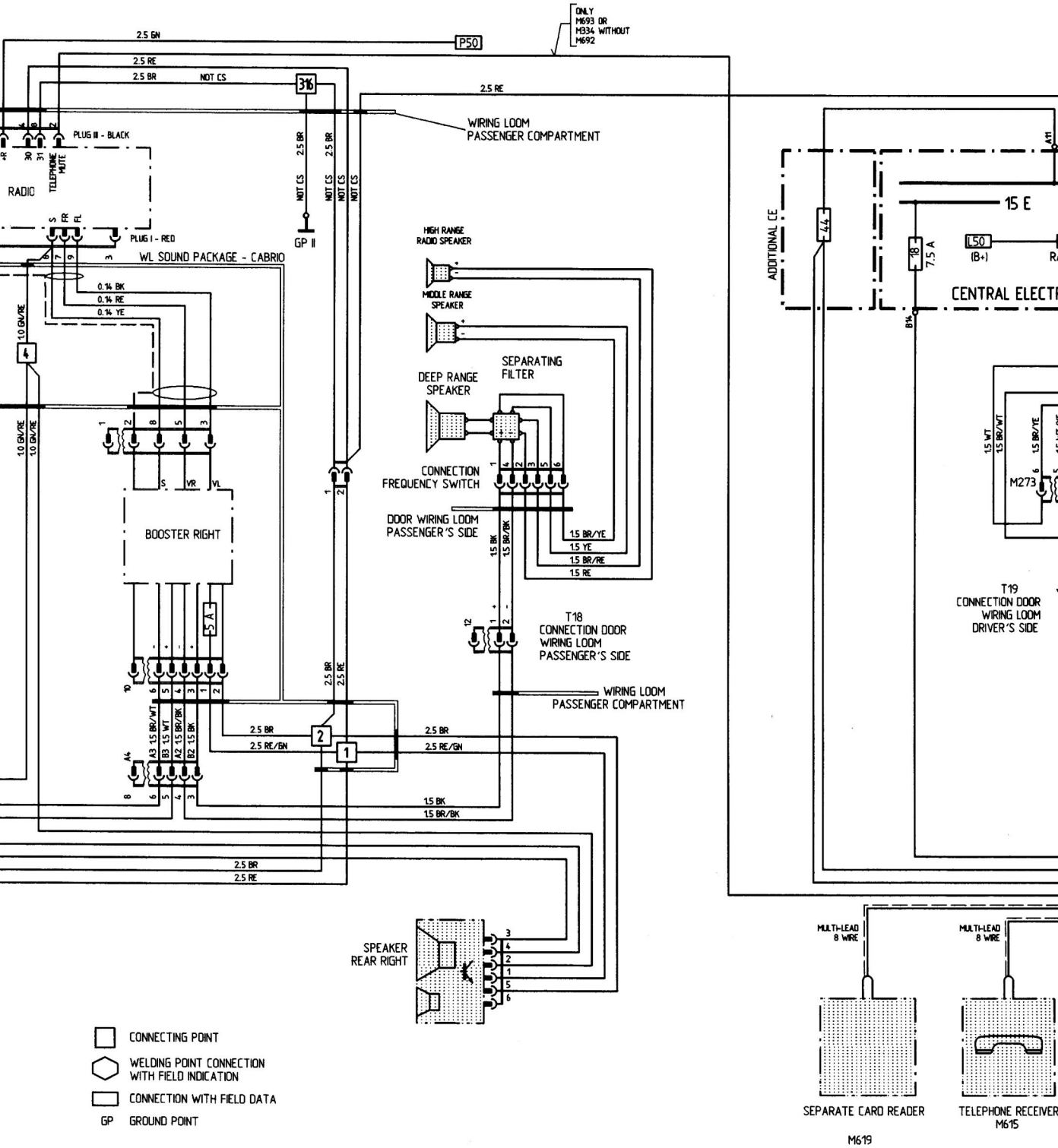

WT = WHITE YE = YELLOW RE = RED VI = VIOLET BL = BLUE GN = GREEN GR = GREY BR = BROWN BK = BLACK

L M N O P

81 82 83 84 85 86 87 88 89 90

RADIO CS

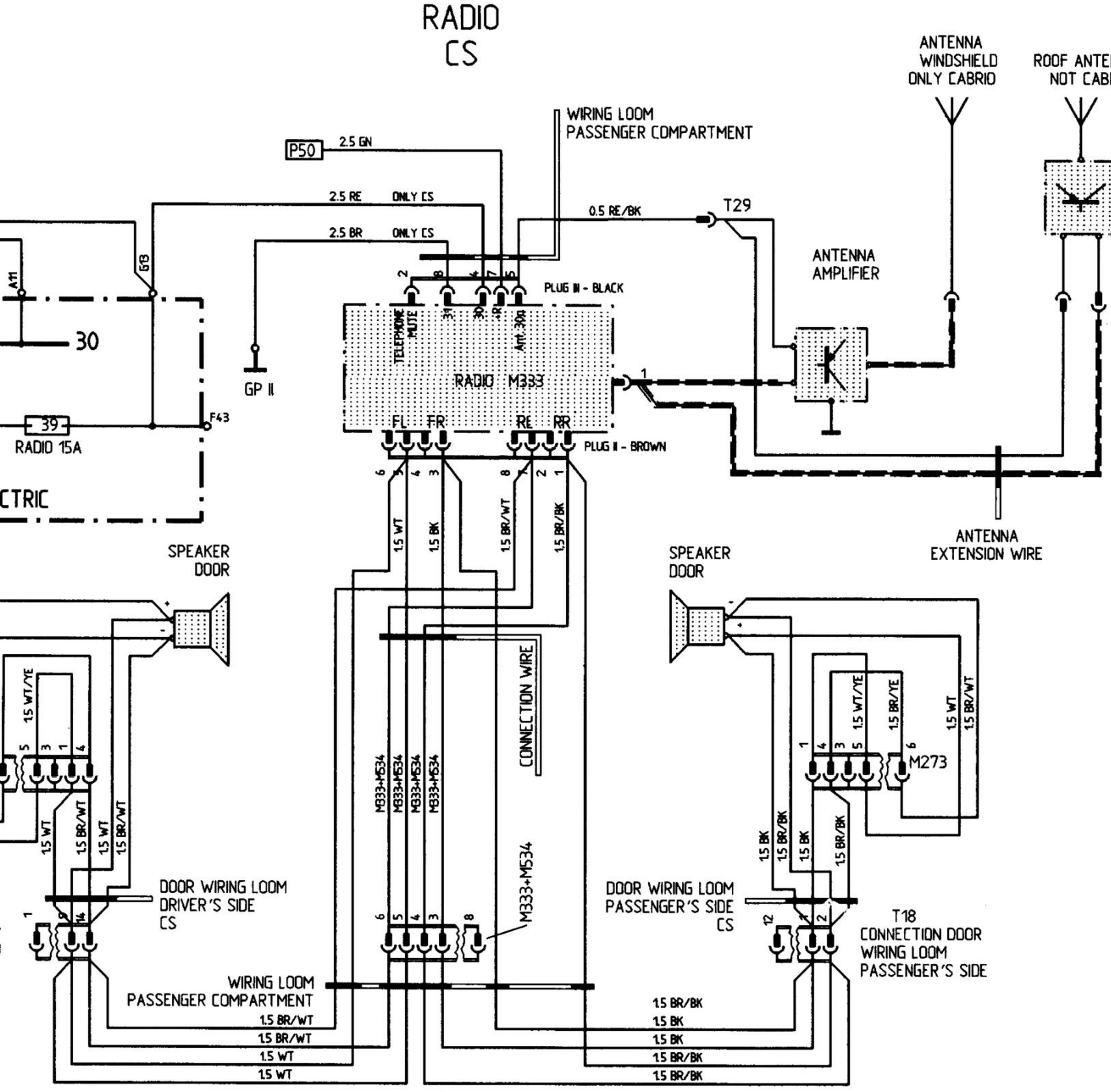

TELEPHONE PREPARATION D-NETWORK M614

(Motorola)

NOT CS

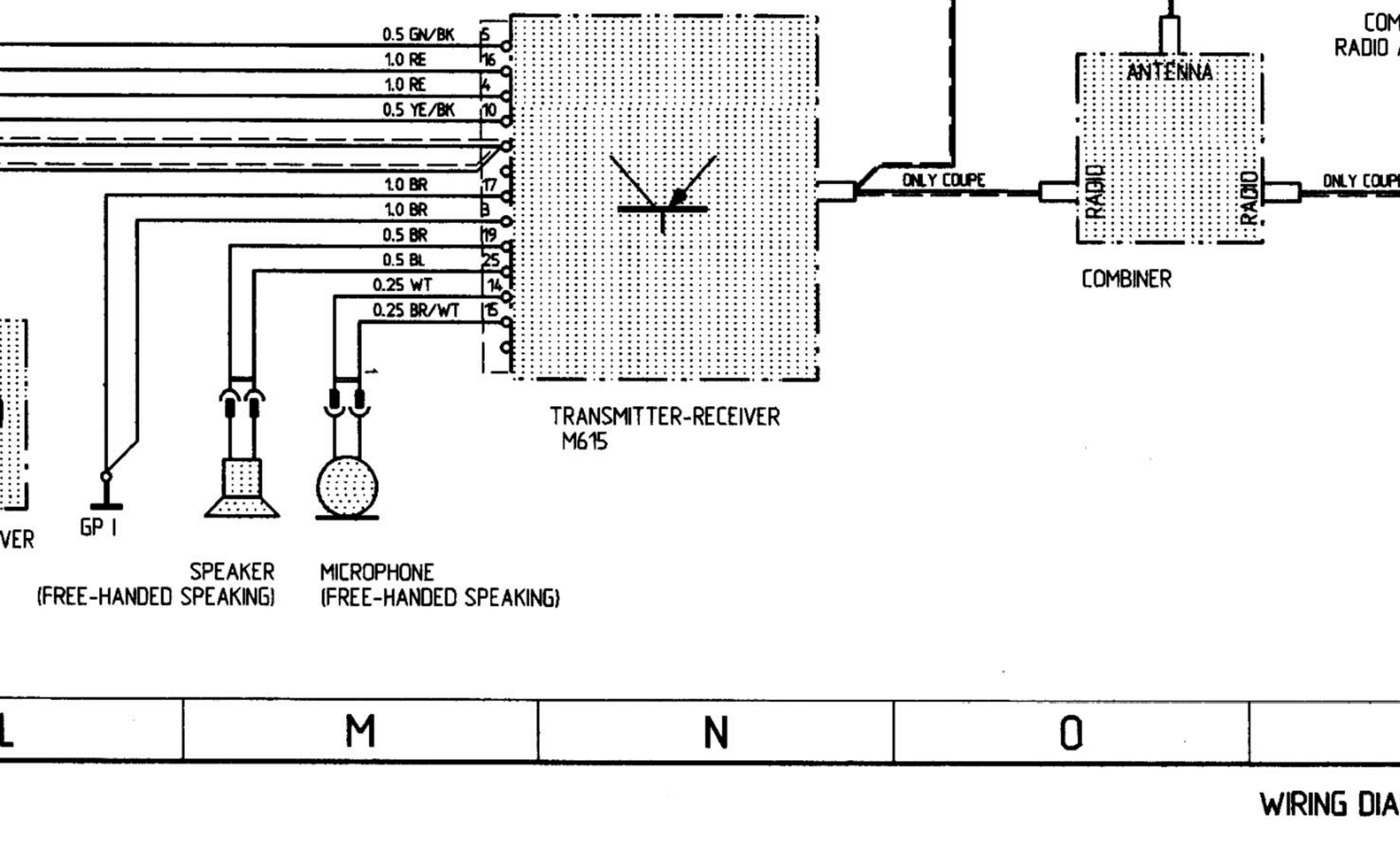

9

ABS, AIRBAG

ABS

HYDRAULIC UNIT

ON STARTER TERM. 30

K41

LEAD ABS-STARTER

LEAD CONNECTOR ONLY RHD

10.0 BK ONLY RHD

4.0 RE

4.0 RE

FOR LHD DIRECT TO BATTERY +

ABS CONTROL UNIT

27 0.75 GN/BL

30

31

23 0.5 PK/GN

17 0.5 PK/BK

0.5 WT

29 1.0 WT

32 1.0 GN/WT

18 1.5 GN/RE

35 1.5 GN/YE

2 1.5 GN

28 1.0 BL/GN

14 0.75 GN/BK

1 2.5 BK/RE

15 0.5 BK/GR

25 0.5 RE/WT

10 1.0 BR

20 1.0 BR

34 1.0 BR

24

26

8

9

4

6

11

21

GROUND PIN CONTROL UNIT

6.0 BR

GP

0.5 GN 0.5 GN 0.5 RE 0.5 RE 0.5 WT 0.5 WT 0.5 YE 0.5 YE

WIRING LOOM ABS

T32 T33 T34 T35

COMBINATION LEAD 5-PIN 4x

T36 T37 T38 T39

SENSOR FRONT RIGHT

SENSOR REAR RIGHT

SENSOR FRONT LEFT

SENSOR REAR LEFT

N8 1.0 RE/WT

STOP LIGHT

GP II

H46

2.5 BK/BL

1.0 BK/GN

1.0 BR

2.5 RE/WT

4.0 RE

G 22

ABS RELAY (ON CE)

87 15 31 30 D11 C45

15 A

ABS

26

CENTRAL

Printed in Germany - X, 1994

E | F | G | H | J | K

91 | 92 | 93 | 94 | 95 | 96 | 97 | 98 | 99 | 100

AIRBAG

CRASH SENSOR LEFT

CRASH SENSOR RIGHT

AIRBAG PASSENGER'S SIDE

ONLY LHD

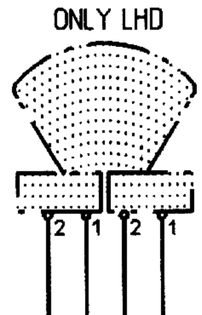

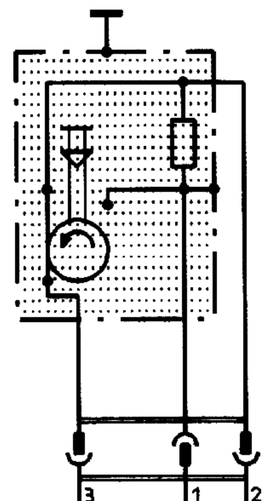

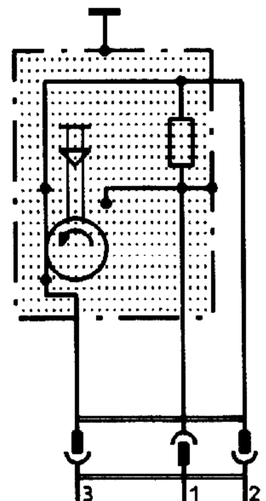

WIRING LOOM AIRBAG LHD

WIRING LOOM PASSENGER COMPARTMENT RHD

AIRBAG CONTROL UNIT

2
- 12 — 0.5 WT/BL — CRASH SENSOR RIGHT
- 10 — 0.5 YE/WT — CRASH SENSOR RIGHT
- 9 — 0.5 RE/BL — CRASH SENSOR RIGHT
- 11 — 0.5 GN — CRASH SENSOR LEFT
- 7 — 0.5 YE — CRASH SENSOR LEFT
- 8 — 0.5 RE/WT — CRASH SENSOR LEFT

3
- 7 — 0.5 PK — PASSENGER'S SIDE, IGNITION TABLET 3/1
- 8 — 0.5 BR — PASSENGER'S SIDE, IGNITION TABLET 3/2
- 9 — 0.5 PK — PASSENGER'S SIDE, IGNITION TABLET 2/1
- 10 — 0.5 BR — PASSENGER'S SIDE, IGNITION TABLET 2/2
- 12 — 0.5 GN/BL — DRIVER'S SIDE, IGNITION TABLET 1/2
- 11 — 0.5 GN/RE — DRIVER'S SIDE, IGNITION TABLET 1/1

1
- 9 — 0.5 WT/BK — HAZARD LIGHT AIRBAG
- 11 — 0.5 BK/RE — MFI + DI RELAY TERM.86
- 12 — 0.5 BK/WT — TERM.15
- 10 — 0.5 BR — TERM.31
- 8 — 0.5 WT — L LEAD
- 7 — 0.5 BL — K LEAD

AIRBAG DRIVER'S SIDE

CONTACT UNIT

1 — 0.5 BL/WT
2 — 1.5 BR/WT
0.5 BR/WT

SHORT-CIRCUITING BRACKET

SLIDING CONTACT

STEERING WHEEL WITH HORN CONTACT

CONNECTION AIRBAG

RHD M562 — L14 — 0.5 WT/BK

RHD M562 — H32 — 0.5 BR

RHD M562 — M16 — 0.5 WT

RHD M562 — 0.5 BL — M13

T42 — 013

T41

T40 CONNECTION PASSENGER COMP.

WIRING LOOM PASSENGER COMPARTMENT

0.5 BR/WT

0.5 BR/WT

N8 — 1.0 RE/WT — STOP LIGHT

0.5 PK/GN — M116

M14 — 0.5 YE/RE — LHD M562 — AIRBAG WARNING LAMP INSTRUMENT CLUSTER DIAGNOSIS PLUG

F30 — D36 — CONTROL LINE HORN RELAY

1.0 BK/GN — 0.5 BK/GR — 0.5 WT — H16 — 0.5 PK/BK — F17

ONLY CS — 0.5 BK

M562 NOT CS — 0.5 BK/RE

M562 — 0.5 BK/WT

LHD M562 — 0.5 BR

GP II

H46 — FRONT WIRING LOOM ONLY LHD

SUPPLY MFI+DI CONTROL UNIT TERM.15

G46

D64

1.0 BR

2.5 RE/WT

STOP LIGHT SWITCH

N9

4.0 RE

3 — 7 — D11 — C45 — D45 — G24

31 — 30

15 A — 26 — ABS

D + — E62

TERM.15

CENTRAL ELECTRIC

6.0 BR — GROUND LEAD HYDRAULIC UNIT

GP

H31 — GROUND

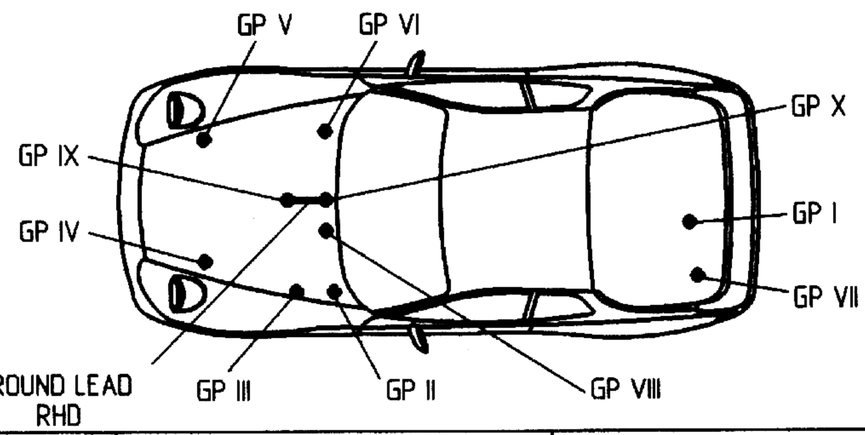

CONNECTING POINT

WELDING POINT CONNECTION WITH FIELD INDICATION

CONNECTION WITH FIELD DATA

GP GROUND POINT

10

E | F | G | H | J | K

WT = WHITE YE = YELLOW RE = RED VI = VIOLET BL = BLUE
GN = GREEN GR = GREY BR = BROWN BK = BLACK

968 Cabrio MODEL 95 SHEET 11

WIRING 968 CABRIO

MOTOR POWER WINDOW
PASSENGER'S SIDE

WELDING POINT
TERM.31

DELAYING RELAY

RELAY DRIVER SIDE WINDOW

RELAY CODRIVER SIDE WINDOW

LUGGAGE COMPARTMENT SWITCH

LUGGAGE
COMPARTMENT LIGHT

WIRING LOOM
LUGGAGE COMPARTMENT HOOD

CONNECTION TRUNK
COMPARTMENT HOOD

MOTOR POWER
DRIVER'S SIDE

POWER
NOT M

Printed in Germany - X, 1994

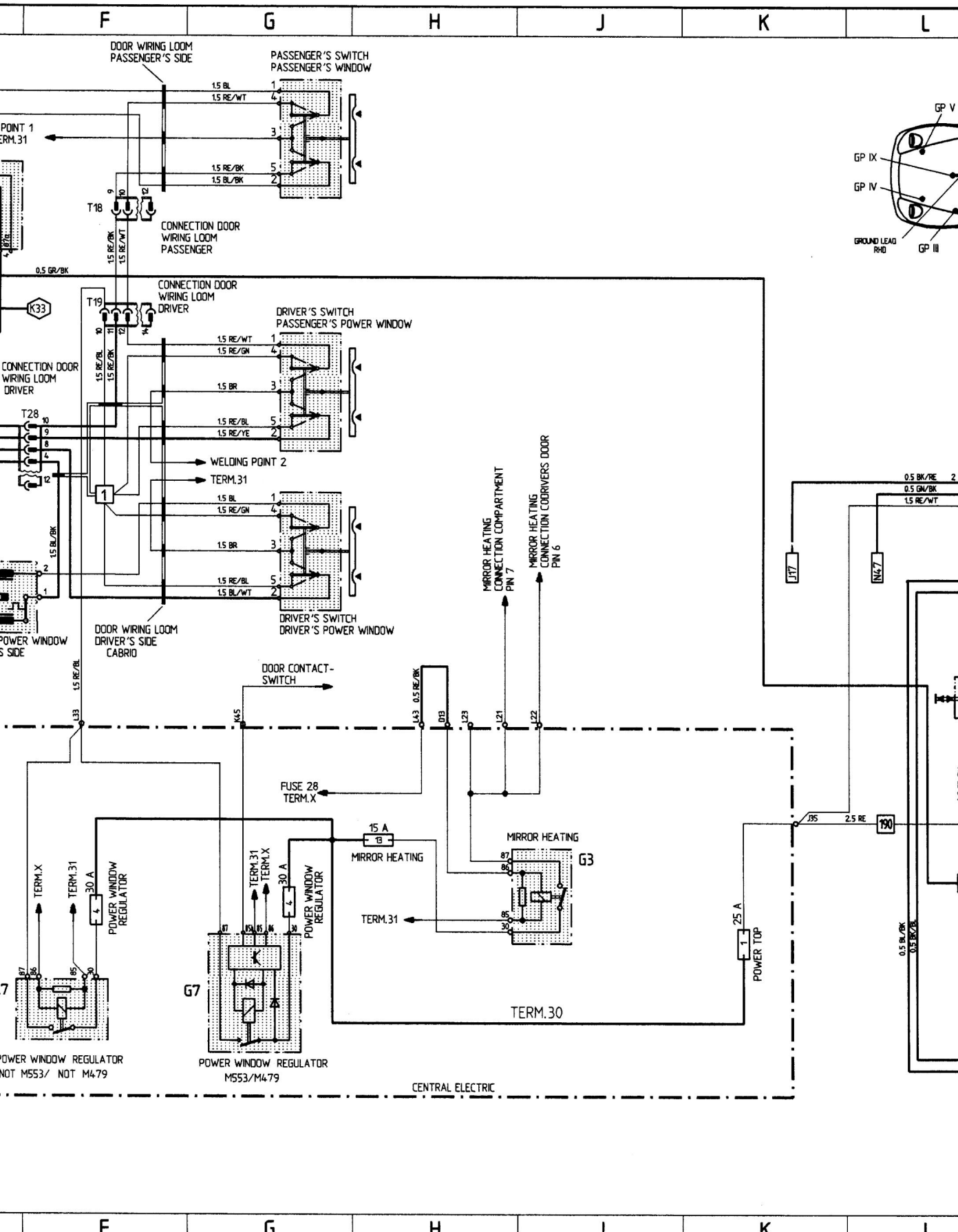

WT = WHITE YE = YELLOW RE = RED VI = VIOLET BL = BLUE GN = GREEN GR = GREY BR = BROWN BK = BLACK

L | M | N | O | P

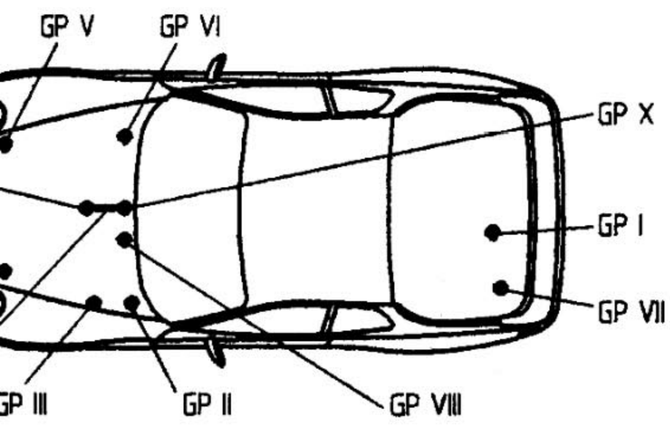

NOT WITH MARKED LEADS ARE WIRING LOOM PASSENGER COMPARTMENT

CABLE LAYOUT DIFFERING FROM SERIES VARIANT

WIRING AS STANDARD

CONNECTING POINT

WELDING POINT CONNECTION WITH FIELD INDICATION

CONNECTION WITH FIELD DATA

GP GROUND POINT

F16

0.5 RE/BK

RELAY ELECTRIC TOP (ON CE)

0.5 BR

WELDING POINT 13 TERM.31

G21

ROOF MOTOR

ROOF MOTOR

2.5 BR

2.5 RE

2.5 BR

2.5 RE

CONTROL RELAY CLOSED

CONTROL RELAY OPEN

0.5 BR

2.5 RE

2.5 BR

0.5 BR

SWITCH ELECTRIC TOP

WIRING LOOM POWER TOP

T20

2.5 RE

2.5 BR

0.5 GR/BK

0.5 BK/YE

0.5 BK

0.5 GR

CONNECTION ELECTRIC TOP

0.5 GN/RE

0.5 BK/RE

CLOSED MICROSWITCH

OPENED IN ENDPOSITION ROOF CLOSED

OPEN MICROSWITCH

OPENED IN ENDPOSITION ROOF OPEN

0.5 GR/BK

WELDING POINT 3 TERM. 31

0.5 YE/BK

0.5 YE

0.5 YE

0.5 WT

0.5 RE

MICROSWITCH WINDSCREEN FRAME

OPEN AT LOCKED TOP

MICROSWITCH WINDSCREEN FRAME

CONNECTION LOCKING SWITCH

WIRING LOOM MICRO SWITCH

101 102 103 104 105 106 107 108 109 110

11

L | M | N | O | P

968 MODEL 95 SHEET 12

CONTROL UNIT AUTOMATIC TRANSMISSION

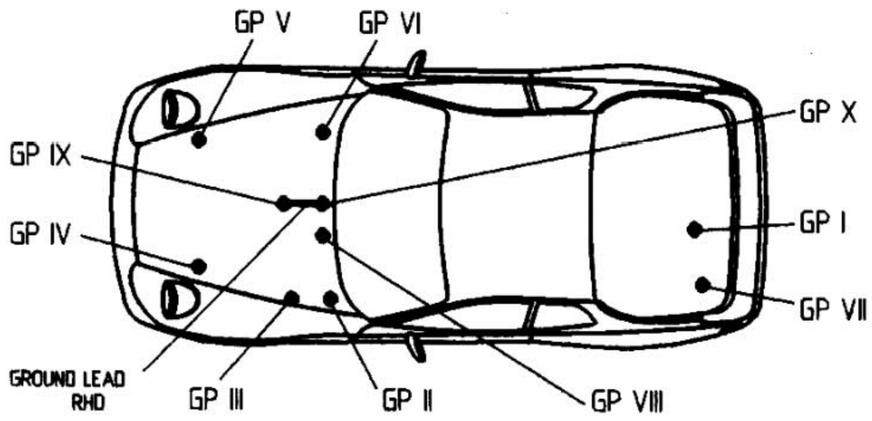

CONTROL UNIT TRANSMISSION

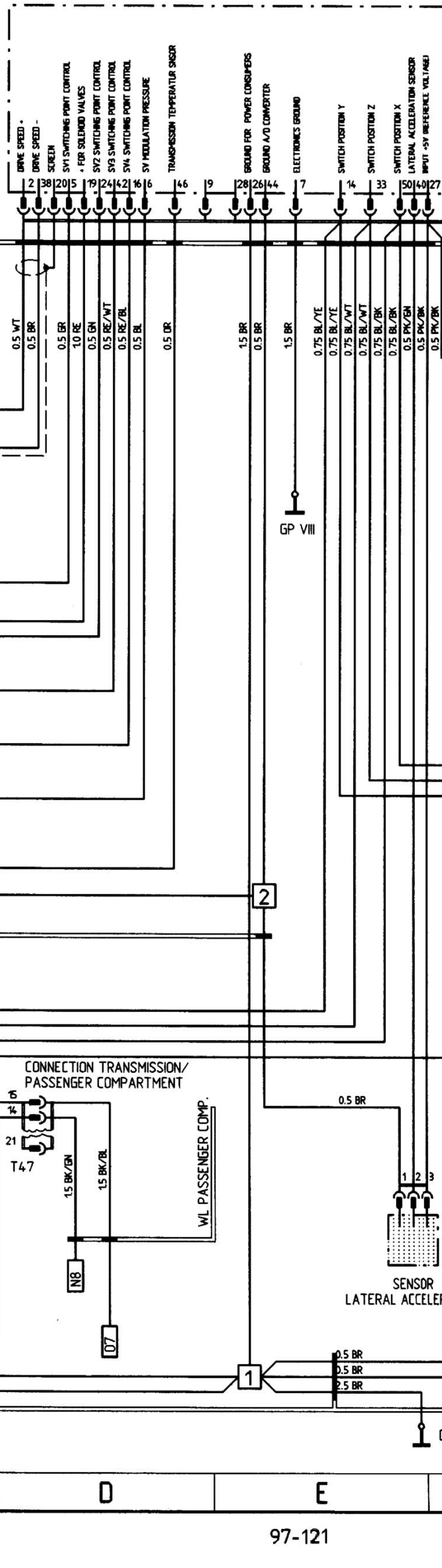

SPEED SENSOR
TRANSMISSION OUTPUT

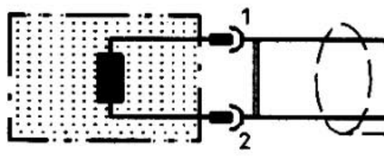

ELECTRICS ON TRANSMISSION

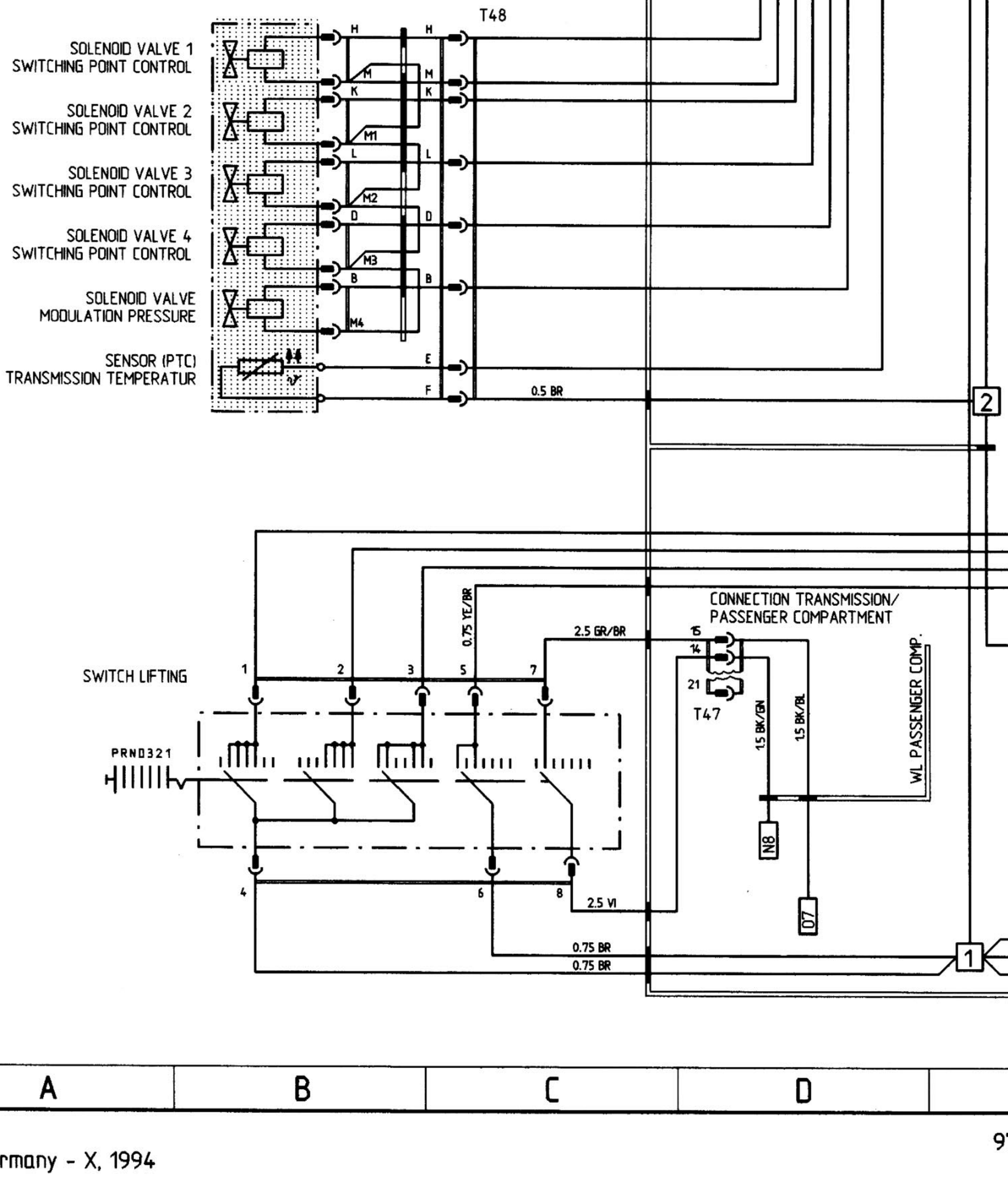

Printed in Germany - X, 1994

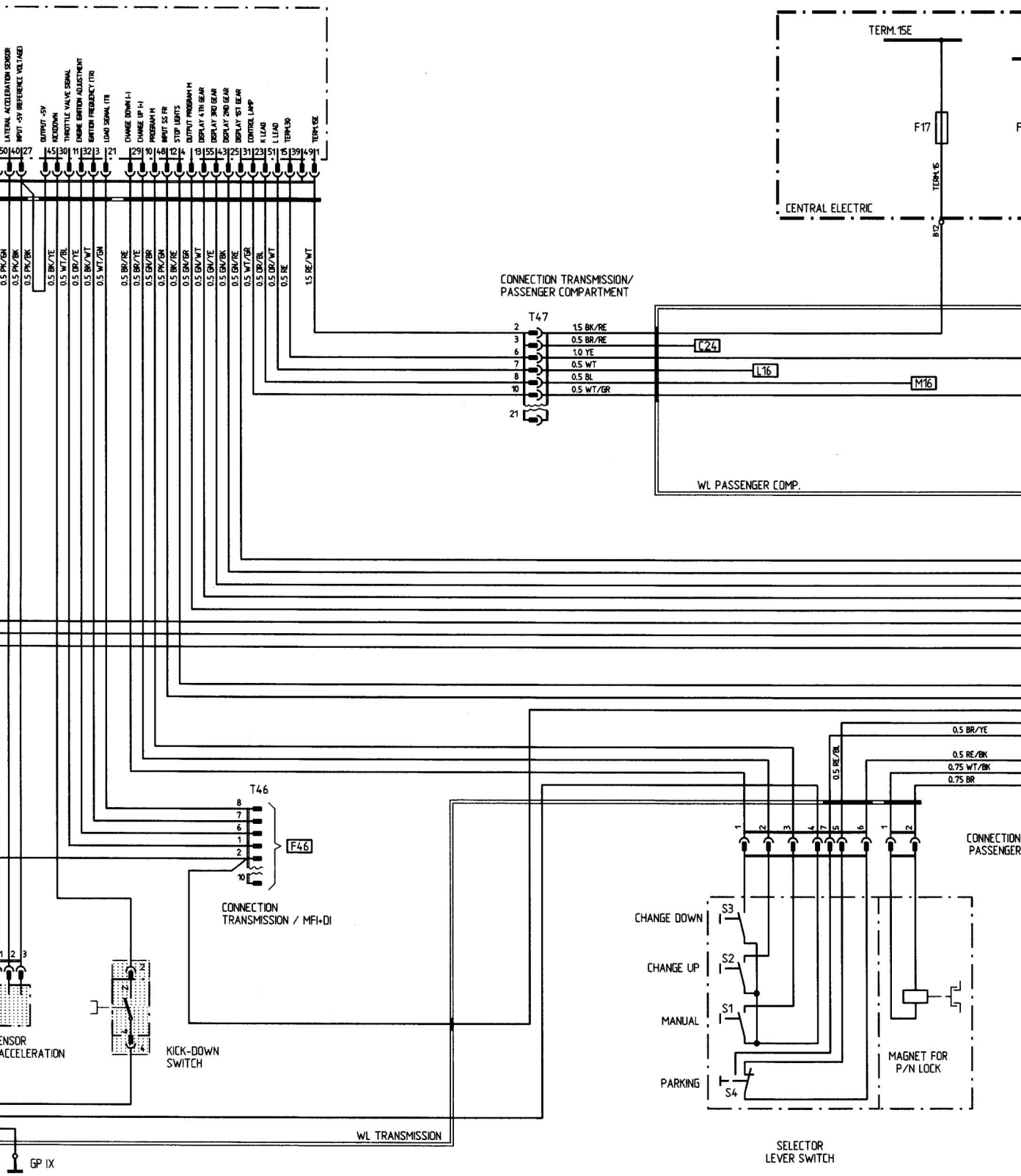

WT = WHITE YE = YELLOW RE = RED VI = VIOLET BL = BLUE GN = GREEN GR = GREY BR = BROWN BK = BLACK

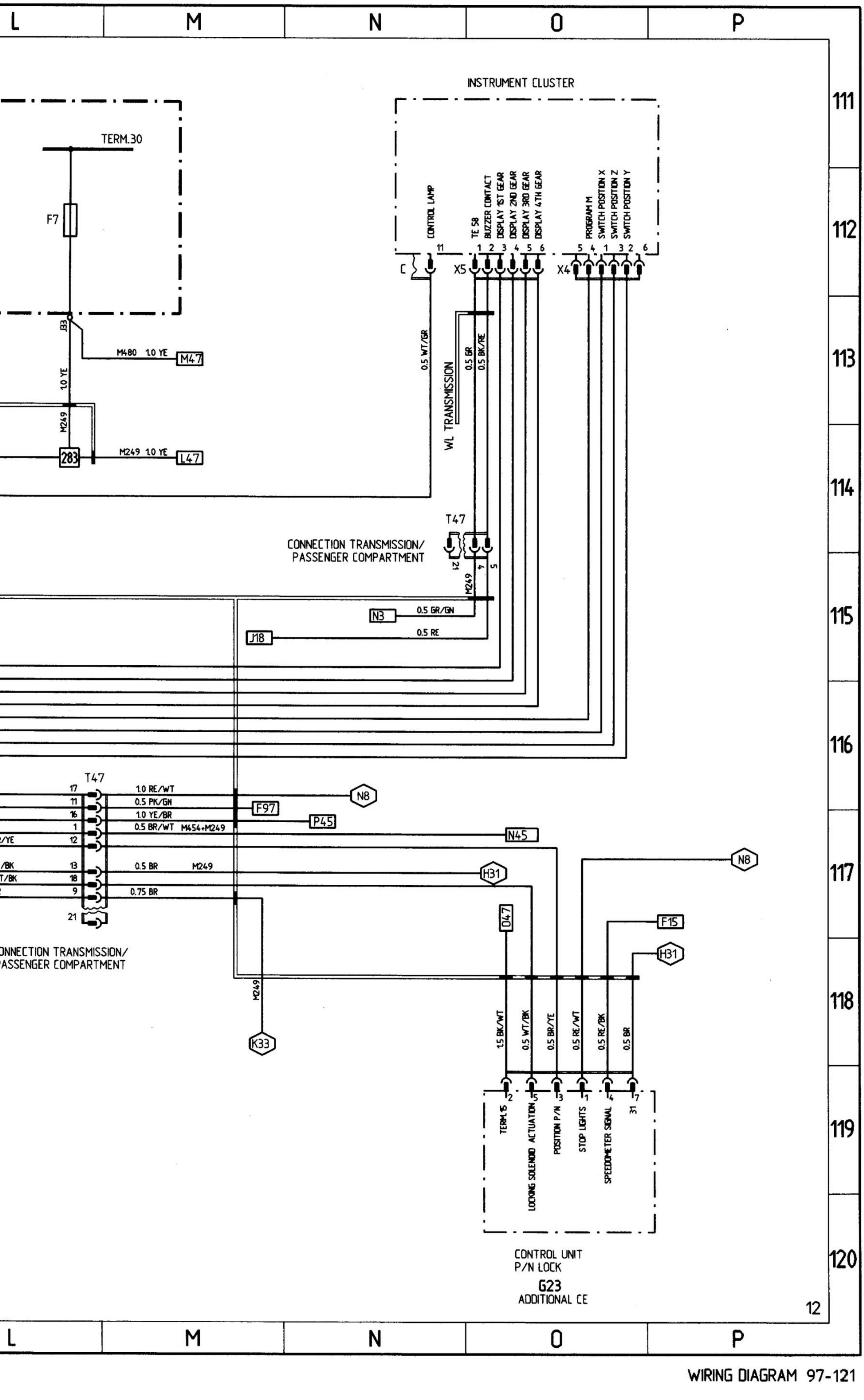
L
M
N
O
P
111
112
113
114
115
116
117
118
119
120
INSTRUMENT CLUSTER
CONTROL LAMP
TE 58
BUZZER CONTACT
DISPLAY 1ST GEAR
DISPLAY 2ND GEAR
DISPLAY 3RD GEAR
DISPLAY 4TH GEAR
PROGRAM M
SWITCH POSITION X
SWITCH POSITION Z
SWITCH POSITION Y
C
X5
X4
TERM.30
F7
J33
M480 1.0 YE
M47
1.0 YE
M249
283
M249 1.0 YE
L47
0.5 WT/GR
WL TRANSMISSION
0.5 GR
0.5 BK/RE
T47
CONNECTION TRANSMISSION/
PASSENGER COMPARTMENT
21
4
5
M249
N3
0.5 GR/GN
J18
0.5 RE
T47
17
11
16
1
12
13
18
9
21
1.0 RE/WT
0.5 PK/GN
1.0 YE/BR
0.5 BR/WT M454+M249
0.5 BR M249
0.75 BR
N8
F97
P45
N45
H31
N8
F15
H31
CONNECTION TRANSMISSION/
PASSENGER COMPARTMENT
M249
K33
047
1.5 BK/WT
0.5 WT/BK
0.5 BR/YE
0.5 RE/WT
0.5 RE/BK
0.5 BR
2
5
3
1
4
7
TERM.15
LOCKING SOLENOID ACTUATION
POSITION P/N
STOP LIGHTS
SPEEDOMETER SIGNAL
31
CONTROL UNIT
P/N LOCK
G23
ADDITIONAL CE
12

A | B | C | D | E

CONSTRUCTION COMPONENTS

DESIGNATION, FUNCTION	POSITION IN VEHICLE LHD	POSITION IN VEHICLE RHD	NOTE	FIELD IN WIRING DIAGRAM
ADDITIONAL CE	6cP	—	LEFT TO STEERING COLUMN	SHEET 6
ADDITIONAL CE	—	6cQ	LEFT TO GLOVE BOX	SHEET 6
AIR COMPRESSOR	3dO	3dO	ON ENGINE	A24
ALARM-PRIMED INDICATOR LAMP LEFT	12bR	12bR	IN PUSH-BUTTON OF LEFT DOOR	O66
ALARM-PRIMED INDICATOR LAMP RIGHT	12bK	12bK	IN PUSH-BUTTON OF RIGHT DOOR	O62
ALARM HORN	7bL	7bL	IN WATER BOX	F69
ALARM SWITCH ENGINE HOOD	2cO	2cO	ENGINE HOOD LOCK	A63
ANTENNA AMPLIFIER	7cL	7cL	IN FOOTWELL, RIGHT SIDE	E82,083
BATTERY	6cL	—	IN WATER BOX	H42
BATTERY	—	16cR	IN LEFT BOHLMANN COMPARTMENT	H42
BUZZER CONTACT	8cP	8cM	ON IGNITION LOCK	J18
CABRIO: ROOF MOTORS	14cN/O	14cN/O	BELOW THE PARCEL TRAY	N/O104
CABRIO: MOTOR POWER WINDOW PASSENGER'S SIDE	9dK	9dR	IN PASSENGER'S DOOR	D101
CABRIO: MOTOR POWER WINDOW DRIVER'S SIDE	9dR	9dK	ON DRIVER'S DOOR	E105
CABRIO: RELAY CODRIVER SIDE WINDOW	6dM	6dP	IN PASSENGER'S FOOTWELL	D104
CABRIO: RELAY DRIVER SIDE WINDOW	6dM	6dP	IN PASSENGER'S FOOTWELL	D103
CABRIO: POWER TOP			(G21) CE	L/M104
CABRIO: CONTROL RELAY ROOF WITH MICROSWITCHES	14cM	14cM	IN LUGGAGE COMPARTMENT ON FIREWALL	O105-110
CABRIO: DELAYING RELAY	6dM	6dP	IN PASSENGER'S FOOTWELL	E102
CATALYTIC CONVERTER CONTROL (ONLY JAPAN)			(G24) ADDITIONAL CE	D20
CENTRAL ELECTRIC	7bQ	7bQ	LEFT IN WATER BOX	SHEET 6
CLUTCH SWITCH	7dP	7dM	TO FOOT CONTROLS	N44-45
CONTACT UNIT AIRBAG	9bP	9bM	ON STEERING WHEEL	G/H95
CONTROL UNIT ABS	7cL	7cL	IN FOOTWELL, RIGHT SIDE	A94-97
CONTROL UNIT AIRBAG	6cM	7bO/P	IN PASSENGER'S FOOTWELL	K93-96
CONTROL UNIT ALARM SYSTEM/CENTRAL LOCKING SYSTEM	6dM	6dP	IN PASSENGER'S FOOTWELL	D-F65-67
CONTROL UNIT MFI+DI	6dM	6dP	IN PASSENGER'S FOOTWELL	D42-50
CONTROL UNIT TRANSMISSION	15cK	15cK	IN REAR RIGHT FENDER	D-G111-112
CONTROL UNIT GONG			(G25) ADDITIONAL CE	K/L19-20
CONTROL UNIT LIFTING ROOF			(G21) CE	H35
CONTROL UNIT LIGHT COMBINATION			(G17+G18) CE	F/G2
CONTROL UNIT P/N LOCK (USA/CANADA)			(G23) ADDITIONAL CE	O119
CONTROL UNIT CRUISE CONTROL	7cR	7cR	IN LEFT FOOTWELL	M44/45
CONTROL UNIT SEAT HEATER LEFT SEAT	10dQ	10dQ	UNDER THE SEAT	O/P25-26
CONTROL UNIT SEAT HEATER RIGHT SEAT	10dL	10dL	UNDER THE SEAT	L21
COOLANT TEMP. SENSOR	4cO	4cO	ON ENGINE BLOCK	B45
COOLANT TEMP. SWITCH AND SENSOR	4dP	4dP	ON ENGINE BLOCK	E/F47
CRASH SENSOR LEFT	7cQ	7cQ	INSIDE FIREWALL LEFT	G95
CRASH SENSOR RIGHT	7cL	7cL	INSIDE FIREWALL RIGHT	G92
DIAGNOSIS PLUG SOCKET	7dM	7dP	IN PASSENGER'S FOOTWELL	M12
DRIVE LEFT HEADLIGHT VERTICAL AIM CONTROL	2cP	2cP	ON HEADLIGHT LEFT	A6
DRIVE RIGHT HEADLIGHT VERTICAL AIM CONTROL	2cM	2cM	ON HEADLIGHT RIGHT	A5
DRIVE LEFT CENTRAL LOCK	11cR	11cR	IN DOOR LEFT	O64-65
DRIVE RIGHT CENTRAL LOCK	11cK	11cK	IN DOOR RIGHT	O67-68
DRIVE CRUISE CONTROL	6cL	6cL	IN ENGINE COMPARTMENT	L44
ELECTRICS ON TRANSMISSION	15/16dP	15/16dP	IN TRANSMISSION	B115-117
FAN MOTOR 1	3cN	3cN	ON RADIATOR	A28
FAN MOTOR 2	3cN	3cN	ON RADIATOR	A27
FLOAT SWTCH BRAKE FLUID	6cP	6cM	IN BRAKE FLUID RESERVOIR	C18
FUEL LEVEL SENSOR	15dN	15dN	IN FUEL TANK	C17
FUEL PUMP	15dL	15dL	ON BASE REAR RIGHT	N46-47
GAS PRESSURE PROP LEFT	15bQ	15bQ	ON TAILGATE	K25

A | B | C | D | E

DESIGNATION, FUNCTION	POSITION IN VEHICLE LHD	RHD	NOTE	FIELD IN WIRING DIAGRAM
GAS PRESSURE PROP RIGHT	15bL	15bL	ON TAILGATE	L26
GENERATOR	3cO	3cO	ON ENGINE	J/K41/42
HALL SENSOR	3cM	3cM	ON TOOTHED BELT HOUSING OVER	B46
HEADLIGHT CLEANERS PUMP (HCS)	6cL	6cL	IN FRONT RIGHT FENDER	A25-26
HEATED OXYGEN SENSOR	2dP	2dP	ON RADIATOR	B45-46
HYDRAULIC UNIT	7dK	7dK	IN FRONT RIGHT FENDER	D/E92
IDLE SPEED POSITIONER	5cO	5cO	IN ENGINE COMPARTMENT	B49
IGNITION COIL	3cL	3cL	WHEEL HOUSING RIGHT FRONT	J45
INSIDE TEMPERATURE SENSOR	8cM	8cP	IN CONTROL PANEL AREA	E21
KICK-DOWN SWITCH	7dO	7dN	TO FOOT CONTROLS	F119
KNOCK SENSOR 1	5cN	5cN	ON ENGINE BLOCK	B47
KNOCK SENSOR 2	5cN	5cN	ON ENGINE BLOCK	B48
MAGNET P/N LOCK (USA/CANADA)	9dN	9dN	AT SELECTOR LEVER SUPPORT	K/L119
MASS AIR FLOW SENSOR	3cP	3cP	IN ENGINE COMPARTMENT	F42
MICRO SWITCH ROOF CLOSED	10aO	10aO	IN ROOF	K40
MOTOR CONCEALED HEADLIGHT LEFT	2dP	2dP	AT LEFT HEADLAMP BODY	D1
MOTOR CONCEALED HEADLIGHT RIGHT	2dM	2dM	AT RIGHT HEADLAMP BODY	E1
MOTOR LIFTING ROOF WITH CONTROL RELAY AND MICRO SWITCH	16dQ	16dQ	IN LEFT BOHLMANN COMPARTMENT	K36-40
MOTOR POWER WINDOW PASSENGER'S SIDE	9dK	9dR	IN PASSENGER'S DOOR	D31
MOTOR POWER WINDOW DRIVER'S SIDE	9dR	9dK	ON DRIVER'S DOOR	D35
MOTOR WINDSHIELD WIPER	7bO	7bN	IN WATER BOX	H/J25-27
OIL PRESSURE SENSOR/ PRESSURE SWITCH	3dM	3dM	ON ENGINE BLOCK BELOW OIL FILTER	F47
OIL TEMPERATURE SENSOR	5cN	5cN	AT CRANKCASE	B44
OUTSIDE TEMPERATURE SENSOR	6cN	6cN	IN HEATER BOX	A23
PARKING BRAKE CONTACT	9dR	9dK	ON HAND BRAKE LEVER	C15-16
PRESSURE SWITCH AIR CONDITIONING SYSTEM	3dQ	3dQ	IN ENGINE COMPARTMENT FRONT LEFT	A24-25
PUMP WINDSCREEN WASH	6cL	6cL	IN FRONT RIGHT FENDER	A26
RELAY ABS			(G22) CE	E99
RELAY AC			(G19) CE	A22
RELAY FOG LIGHT CUTOFF (ONLY JAPAN)			(G26) ADDITIONAL CE	H1
RELAY START LOCK (ONLY AUTOMATIC-TRANSMISSION)			(G20) CE	P44
RELAY DAYTIME RUNNING LIGHT (ONLY CANADA)			(G26) ADDITIONAL CE	L3
SEAT BELT CONTACT	10dO	10dN	TO BELT BUCKLE	C15
SENSOR LATERAL ACCELERATION	8eN	8eN	UNDER THE RIGHT SEAT	E119
SPEED SENSOR / MFI + DI	6cN	6cN	ABOVE FLYWHEEL	B49
SPEED SENSOR CU TRANSMISSION	14dM	14dM	BY TRANSMISSION RIGHT	B114
STARTER	7cN	7cN	ON CLUTCH BELL HOUSING	L42
STOP LIGHT SWITCH	7dP	7dM	TO FOOT CONTROLS	09
SWITCH TAILGATE UNLOCKING	7dQ	7dL	IN DRIVER'S FOOTWELL	F31
SWITCH COOLING WATER TEMPERATURE	2dP	2dP	ON RADIATOR	A29-30
SWITCH OIL LEVEL WARNING	6eN	6eN	UNDER THE ENGINE ON OIL PAN	F43
SWITCH BACKUP LIGHT	15dO	15dO	(ONLY TRANSMISSION)	07-8
TAILGATE UNLOCKING MOTOR	18cM	18cM	IN LUGGAGE COMPARTMENT AT END-PANEL	G/H33
TEMPERATURE SENSOR FOR CATALYZER	9eN	9eN	ON CATALYZER	C19
THROTTLE VALVE POTENTIOMETER	4/5cO	4/5cO	ON THROTTLE VALVE ASSEMBLY	B47
TWO-TONE HORN 1	3cQ	3cQ	IN FRONT LEFT FENDER	A39
TWO-TONE HORN 2	3cQ	3cQ	IN FRONT LEFT FENDER	A40
VALVE CAMSHAFT CONTROL	5cM	5cM	AT CYLINDER HEAD COVER	B44
VALVE TANK VENTING	6cQ	6cQ	IN ENGINE COMPARTMENT (ONLY CAT.)	B43

M N O P

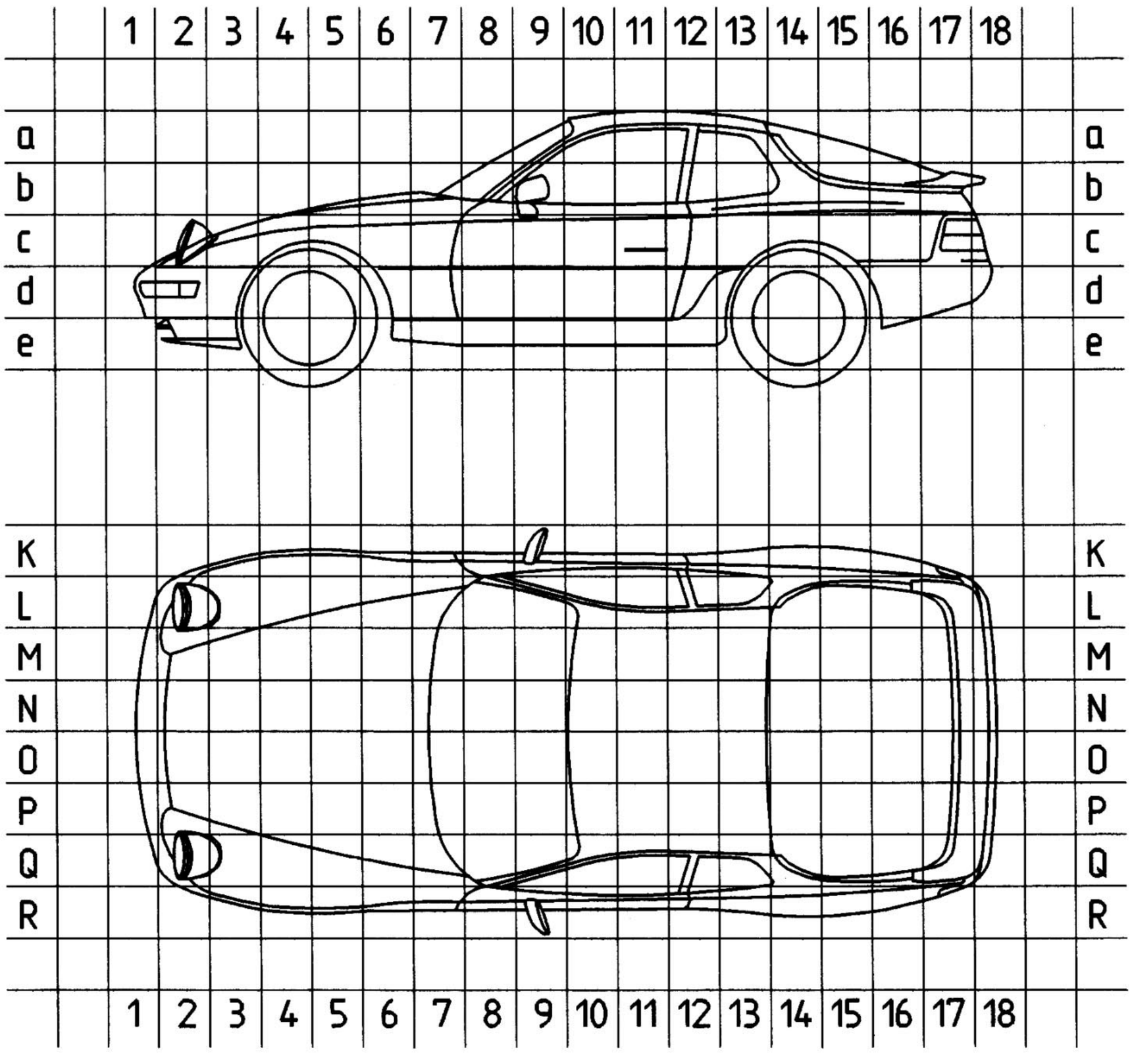

13

M N O P

968 MODEL 95 SHEET 14

PLUG CONNECTIONS, GROUND POINTS, ABBREVIATIONS

PLUG CONNECTIONS

CODE	NUMBER OF PINS	DESIGNATION, FUNCTION	POSITION IN VEHICLE LHD	POSITION IN VEHICLE RHD	NOTE
T1	14	WL PASSENGER COMPARTMENT / WL MFI+DI	6dM	6dP	IN PASSENGER'S FOOTWELL
T2					
T3					
T4	2	BRAKE PAD WEAR CONTACT FRONT RIGHT / COMBI. LEAD	5dL	5dL	LOW ON SHOCK ABSORBER
T5	2	COMB. LEAD RIGHT / WL FRONT (BVA)	6cL	6cL	IN ENGINE COMPARTMENT
T6	2	COMB. LEAD LEFT / WL FRONT (BVA)	6cQ	6cQ	IN ENGINE COMPARTMENT
T7	2	BRAKE PAD WEAR CONTACT FRONT LEFT / COMBI. LEAD	5dQ	5dQ	LOW ON SHOCK ABSORBER
T8	2	BRAKE PAD WEAR CONTACT REAR RIGHT / COMBI. LEAD	14dL	14dL	ON SEMI-TRAILING ARM
T9	2	COMB. LEAD RIGHT / WL PASSENGER COMP.	15dM	15dM	ABOVE DRIVE SHAFTS ON
T10	2	COMB. LEAD LEFT / WL PASSENGER COMP.	15dP	15dP	LUGGAGE COMPARTMENT PANEL
T11	2	BRAKE PAD WEAR CONTACT REAR LEFT / COMBI. LEAD	14dQ	14dQ	ON SEMI-TRAILING ARM
T12	6	WL HEATER, AIR CONDITIONING / PASSENGER COMP.	7cO/N	7cO/N	IN CONTROL PANEL AREA
T13	7	WL PASSENGER COMPARTMENT / ENGINE HOOD	6bP	6bP	IN ENGINE HOOD
T14	8	SEAT RIGHT / WL PASSENGER COMPARTMENT	11eM	11eM	LOW ON SEAT
T15	8	SEAT LEFT / WL PASSENGER COMPARTMENT	11eP	11eP	LOW ON SEAT
T16	4	REAR WINDOW WIPER, HIGH MOUNTED STOP LIGHT/ WL PASSENGER COMP. ONLY COUPE	14cQ	14cQ	BEHIND C-PILLAR
T17					
T18	12	WL PASSENGER COMPARTMENT / WL PASSENGER'S DOOR ONLY COUPE	7dK	7dR	IN PASSENGER'S FOOTWELL
T18	12	WL PASSENGER COMPARTMENT / WL PASSENGER'S DOOR ONLY CABRIO	7dK	7dR	IN PASSENGER'S FOOTWELL
T19	14	WL PASSENGER COMPARTMENT / WL DRIVER'S DOOR ONLY COUPE	7dR	7dK	IN DRIVER'S FOOTWELL
T19	14	WL PASSENGER COMPARTMENT / WL DRIVER'S DOOR ONLY CABRIO	7dR	7dK	IN DRIVER'S FOOTWELL
T20	8	WL PASSENGER COMPARTMENT / WL SUN ROOF ONLY COUPE	16dQ	16dQ	IN BOHLMANN COMPARTMENT
T20	8	WL PASSENGER COMPARTMENT / WL POWER TOP ONLY CABRIO	16dQ	16dQ	IN BOHLMANN COMPARTMENT
T21	14	WIRING LOOM MFI + DI / WIRING LOOM FRONT END	6cP	6cP	IN ENGINE COMPARTMENT
T22	2	CODING PLUG / MFI + DI	6dM	6dP	IN PASSENGER'S FOOTWELL
T23					
T24	2	WL GENERATOR STARTER / WL FRONT END	6cO	6cO	IN ENGINE COMPARTMENT
T25					
T26	19	DIAGNOSIS PLUG	6dL	6dO	IN PASSENGER'S FOOTWELL
T27	12	WL PASSENGER COMPARTMENT / WL PASSENGER'S DOOR	7dK	7dR	IN PASSENGER'S FOOTWELL
T28	12	WL PASSENGER COMPARTMENT / WL DRIVER'S DOOR	7dR	7dK	IN DRIVER'S FOOTWELL
T29	1	ANTENNA AMPLIFIER / WL PASSENGER COMP.	7cO	7cO	BEHIND THE RADIO
T30					
T31					
T32	2	WL ABS / COMBINATION LEAD FR	6cL	6cL	IN ENGINE COMPARTMENT
T33	2	WL ABS / COMBINATION LEAD FL	6cQ	6cQ	IN ENGINE COMPARTMENT
T34	2	WL ABS / COMBINATION LEAD RL	15dP	15dP	ABOVE DRIVE SHAFTS
T35	2	WL ABS / COMBINATION LEAD RR	15dM	15dM	ON LUGGAGE COMPARTMENT PANEL
T36	2	COMB. LEAD FR / ABS-SENSOR FR	5dL	5dL	LOW ON SHOCK ABSORBER
T37	2	COMB. LEAD FL / ABS-SENSOR FL	5dQ	5dQ	LOW ON SHOCK ABSORBER
T38	2	COMB. LEAD RL / ABS-SENSOR RL	14dQ	14dQ	ON SEMI-TRAILING ARM
T39	2	COMB. LEAD RR / ABS-SENSOR RR	14dL	14dL	ON SEMI-TRAILING ARM
T40	6	WL PASSENGER COMPARTMENT / WL ABS	6dM	6dM	IN FOOTWELL, RIGHT SIDE
T41	6	WL PASSENGER COMPARTMENT / WL AIRBAG	6dM	7cO/P	IN PASSENGER'S FOOTWELL
T42	2	WL PASSENGER COMPARTMENT / WL AIRBAG	6cM	—	IN PASSENGER'S FOOTWELL
T43	3	SPEED- REFERENCE MARK SENSOR / MFI + DI	6cN	6cN	ON ENGINE REAR
T44	3	HEATED OXYGEN SENSOR / MFI+DI	6cN	6cN	ON ENGINE REAR
T45	2	WL PASSENGER COMPARTMENT/ FUEL PUMP	13dM	13dM	AT TRANSMISSION SUPPORT
T46	10	WL MFI+DI / WL TRANSMISSION	7cM	7cP	IN PASSENGER'S FOOTWELL
T47	21	WL PASSENGER COMPARTMENT / WL TRANSMISSION	7cK	7cL	IN PASSENGER'S FOOTWELL
T48	8	WL TRANSMISSION/ ELECTRICS ON TRANSMISSION ONLY M249	15/16dP	15/16dP	ON GEARBOX

Printed in Germany - X, 1994

	FIELD IN WIRING DIAGRAM
	N15, F44/45
	A15
	A16
	A18
	A19
	P15
	P16
	P18
	P19
	D23
	J27/28, B64
	L22
	N27
	O23
	BC32, HJ86, OP86
	F102, HJ86, OP86
	BC34, D86, L86
	F103, D86, L86
	H38
	M107/108
	G48/49
	A50
	J43
	L/N12
	M63-65
	M68,E/F104
	F82, O82
	B98
	B98
	B98
	B98
	B98
	B98
	B98
	B98
	F96
	H97
	J96, O13
	B: 9
	B45/46
	M47
	F46, G118
	D118, H114, N114, L117
	C115-117

GROUND POINTS

CODE	DESIGNATION, FUNCTION	POSITION IN VEHICLE LHD	RHD
MP I	COVER PANEL	18cO	18cO
MP II	INSIDE FIREWALL ELECTRONICS CHASSIS	7cP	7cP
MP III	INSIDE FIREWALL CABLE TO GROUND	7cP	7cP
MP IV	LONGITUDINAL SUPPORT	3dP	3dP
MP V	LONGITUDINAL SUPPORT	3dM	3dM
MP VI	BODY BATTERY LHD	6cL	—
MP VII	BODY BATTERY RHD	—	16cQ
MP VIII	ENGINE BLOCK "1FI+DI ELECTRONICS CHASSIS	6cO	6cO
MP IX	CLUTCH BELL HOUSING BATTERY LEAD LHD MFI + DI CABLE TO GROUND	7cO	7cO
MP X	BODY RHD FIREWALL	—	7cO

ABBREVIATIONS

CODE	MEANING	CODE	MEANING
ABS	ANTILOCK BRAKING SYSTEM	LHD	LEFT-HAND DRIVE
AC	AIR CONDITIONING SYSTEM	MFI + DI	DIGITAL ENGINE ELECTRONICS
ADL	ADDITIONAL DRIVING LIGHTS	NO	NUMBER
CE	CENTRAL ELECTRIC	NTC	NEGATIVE TEMPERATURE COEFFICIENT
CL	CLOSE	OP	OPEN
CLS	CENTRAL LOCKING SYSTEM	PIN	PIN
CP	CONNECTING POINT	PL	PLUG
CS	CLUBSPORT VERSION	POT	POTENTIOMETER
CU	CONTROL UNIT	RA	REAR AXLE
DEF	DEFROST	RFL	REAR FOG LIGHT
DP	DISCONNECTING POINT	RHD	RIGHT-HAND DRIVE
ESO	ENGINE-SPEED SENSOR OUTPUT	RL	REAR LEFT
FA	FRONT AXLE	ROW	REST OF WORLD
FCU	FREQUENCY CONVERTER UNIT	RR	REAR RIGHT
FL	FRONT LEFT	SA	SAUDI ARABIA
FOG	FOG LIGHT	SCS	COMBINED STEERING COLUMN SWITCH
FR	FRONT RIGHT	SS	SPEED SENSOR
GP	GROUND POINT	TE	TERMINAL
HCS	HEADLIGHT CLEANING SYSTEM	WL	WIRING LOOM
HF	HIGH FREQUENCY	WP	WELD POINT
IC	INSTRUMENT CLUSTER	WW	WORLDWIDE
LED	LIGHT-EMITTING DIODE		
LF	LOW FREQUENCY		

L | M | N | O | P

M - NUMBERS

M 113	CANADA VERSION
M 139	SEAT HEATER SEAT LEFT
M 150	WITHOUT CATALYZER
M 193	JAPAN VERSION
M 215	SAUDI-ARABIA VERSION
M 249	AUTOMATIC TRANSMISSION
M 288	HEADLIGHT CLEANING SYSTEM
M 340	SEAT HEATER SEAT RIGHT
M 454	CRUISE CONTROL
M 479	AUSTRALIAN VERSION
M 480	6-RANGE-TRANSMISSION
M 484	USA VERSION
M 490	AUDIO OPTION PACK
M 543	ANTI-JOY RIDE DEVICE
M 553	USA-CANADA VERSION
M 562	AIRBAG
M 573	AIR CONDITIONING SYSTEM
M 605	HEADLIGHT VERTICAL AIM CONTROL
M 650	LIFTING ROOF

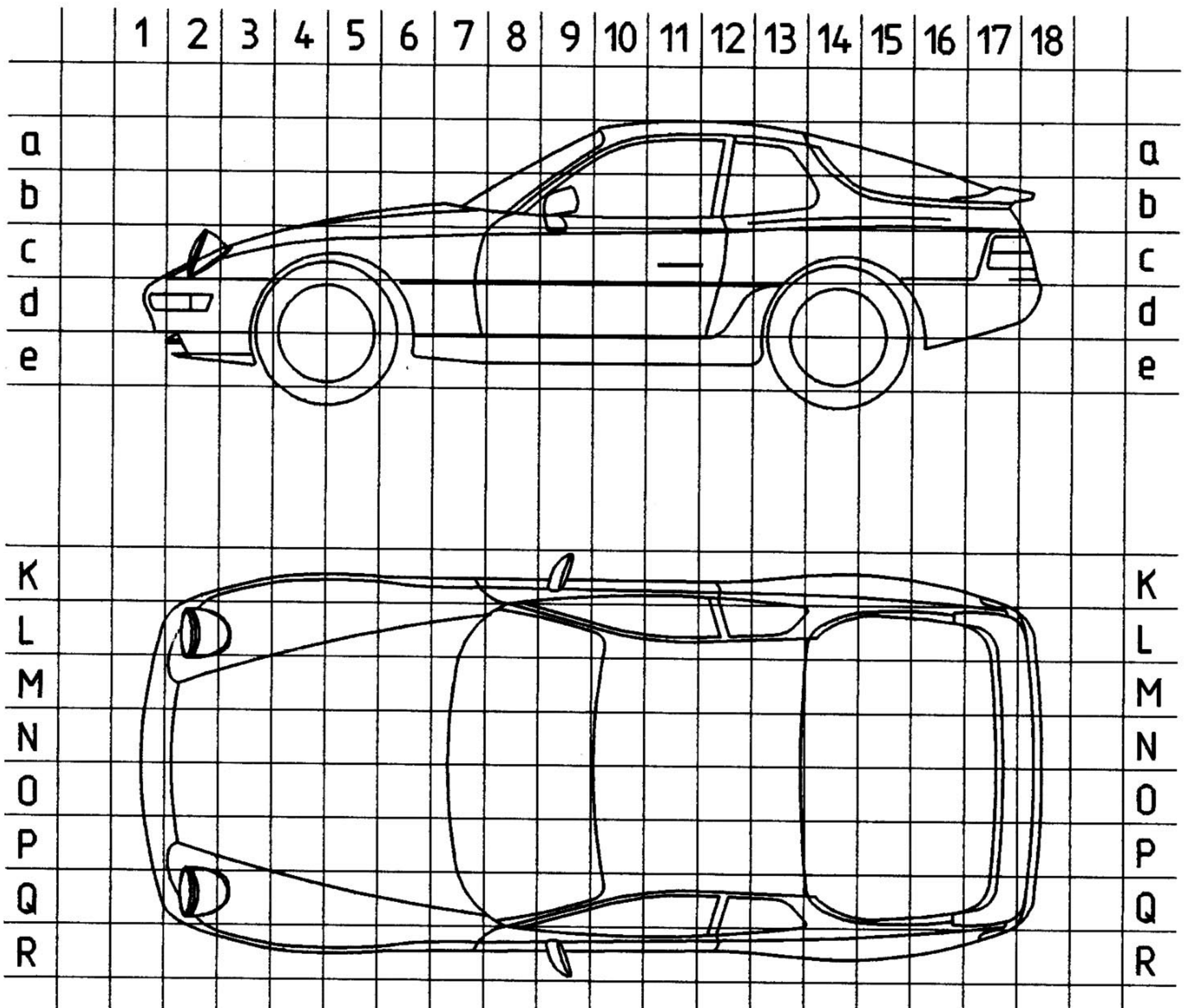

14

L | M | N | O | P