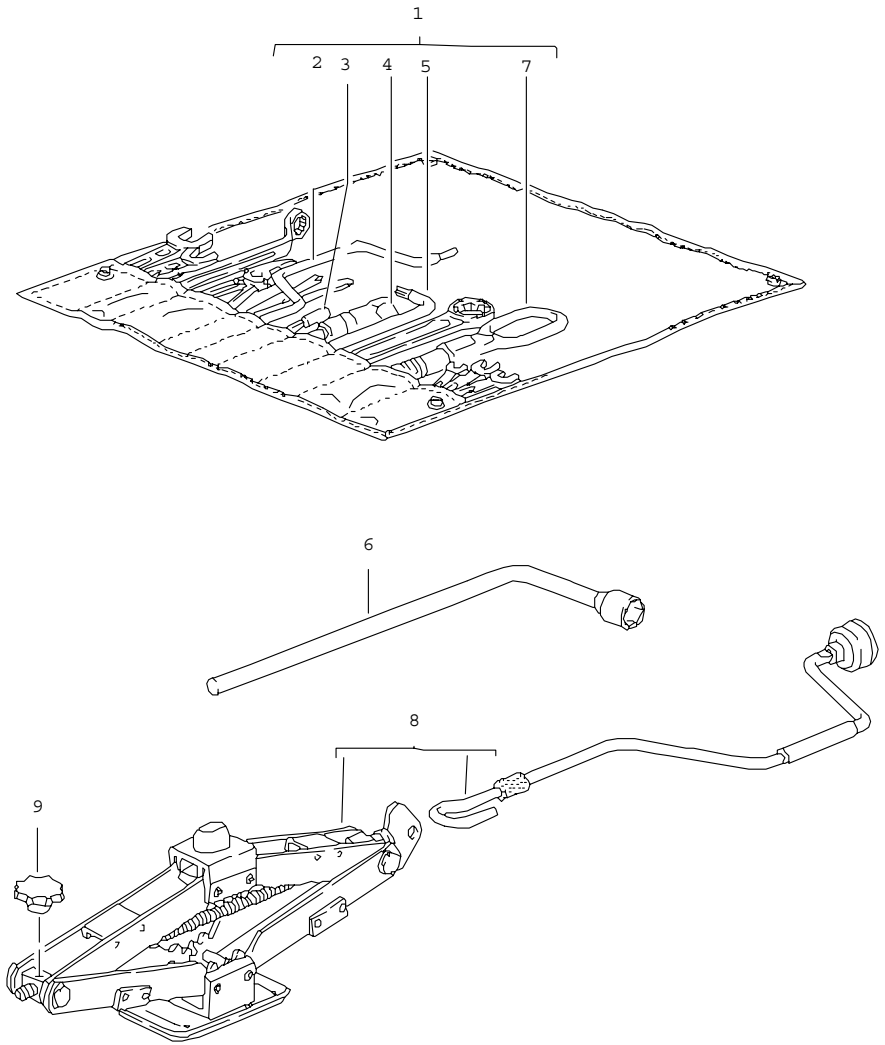

Pos	Part Number	Name	Remarks	Qty	Model
		tool jack			
1	964 721 115 01	tool bag with contents	-92	1	CARRERA 2/4 CARRERA RS
1	964 721 115 01	tool bag with contents	93-	1	CARRERA 2/4
(1)	965 721 115 01	tool bag with contents	-92	1	TURBO
(1)	965 721 115 01	tool bag with contents	93-	1	TURBO
2	928 521 907 02	crank for emergency control		1	
3	911 721 237 00	intermediate piece for emergency control power windows		1	
4	999 571 054 02	spark plug wrench		1	CARRERA 2/4 CARRERA RS
(4)	477 012 203 A	spark plug wrench		1	TURBO
5	999 571 052 02	polygon wrench		1	
6	999 571 045 02	rim wrench		1	
7	928 722 101 05	towing lug		1	
8	000 721 711 01	articulated jack		1	(AUS)
8	000 721 711 00	articulated jack	-92	1	
8	000 721 710 01	jack	93-	1	
9	999 043 002 00	nut		1	
		- -- E N D -- -			

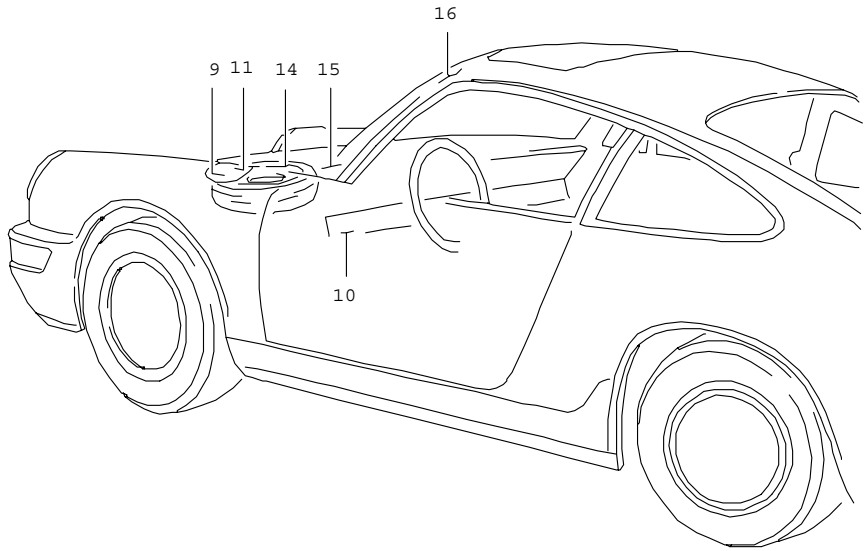

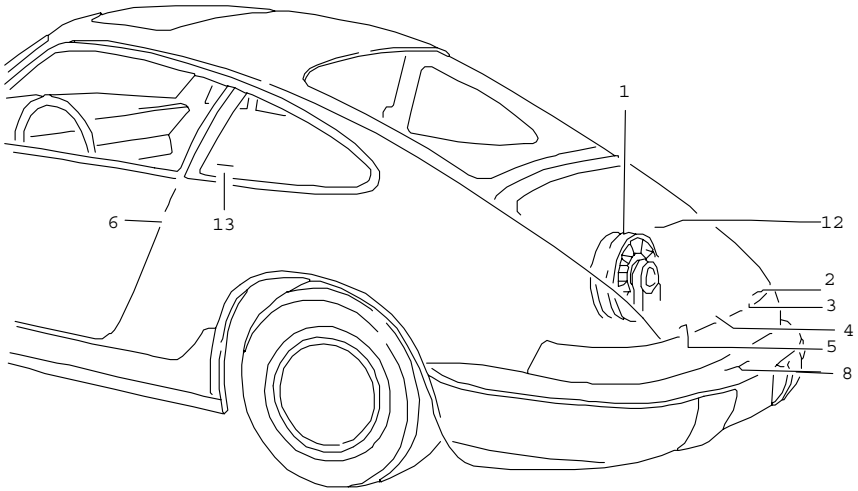

Pos	Part Number	Name	Remarks	Qty	Model
		stickers			
2	964 602 544 01	sticker firing order		1	
3	901 006 503 00	sticker valve clearance	89	1	
4	964 006 111 00	sticker engine-oil level		1	
5	964 701 287 00	sticker tyre pressure		1	
5	964 701 287 02	sticker tyre pressure	-92	1	(AUS) M 395
5	964 701 287 21	sticker tyre pressure	-92	1	(AUS) M 402
5	964 701 287 22	sticker tyre pressure	93-	1	(AUS) M 402
5	964 701 287 23	sticker tyre pressure	93-	1	CARRERA 2/4 M 402/403
5	964 701 287 24	sticker tyre pressure	93-	1	TURBO-LOOK M 403
5	964 701 287 26	sticker tyre pressure	93-	1	CARRERA 2/4 (AUS) M 402/ M 403
5	964 701 287 32	sticker		1	SPEEDSTER (AUS) M 403
5	965 701 287 10	sticker tyre pressure	93-	1	TURBO M 403
5	965 701 287 11	sticker tyre pressure	93-	1	TURBO/LOOK M 403
5	965 701 287 25	sticker tyre pressure	93-	1	TURBO M 406/407
8	928 006 901 00	sticker drawbar load		1	
9	911 701 251 00	indication sticker unleaded fuel only white		1	(J)(AUS)
9	911 701 251 01	indication sticker unleaded fuel only black		1	(J)(AUS)

Pos	Part Number	Name	Remarks	Qty	Model
10	944 701 210 02	sticker EUROSUPER unleaded		1	
10	928 701 173 03	sticker unleaded fuel only		1	(B)(L)
10	911 701 253 00	sticker unleaded fuel only		1	(J)(AUS)
11	930 701 203 01	sticker type of fuel 91 ROZ	-92	1	(J)
11	930 701 203 04	sticker type of fuel 91 ROZ	93-	1	(J)
11	928 006 117 04	sticker type of fuel 91 ROZ		1	(AUS)
11	928 006 117 24	sticker type of fuel 96 ROZ		1	(AUS)
11	928 006 117 03	sticker type of fuel 95 ROZ		1	
11	928 006 117 21	sticker type of fuel 95 ROZ		1	
11	928 006 117 13	sticker type of fuel 98 ROZ/RON		1	CARRERA RS (D)
11	928 006 117 14	sticker type of fuel 98 ROZ/RON		1	CARRERA RS (S)
11	928 006 117 15	sticker type of fuel 98 ROZ/RON		1	CARRERA RS (GB)
11	928 006 117 16	sticker type of fuel 98 ROZ/RON		1	CARRERA RS (I)
11	928 006 117 17	sticker type of fuel 98 ROZ/RON		1	CARRERA RS (E)
11	928 006 117 18	sticker type of fuel 98 ROZ/RON		1	CARRERA RS (F)
11	928 006 117 19	sticker type of fuel 98 ROZ/RON		1	CARRERA RS M 150
12	930 006 503 18	sticker engine specifications exhaust system		1	TURBO M 553,479
12	964 006 109 02	sticker engine specifications	90	1	M 553,479
12	964 006 109 05	sticker engine specifications	91	1	CARRERA 2/4 M 553,479
12	964 006 109 08	sticker adjustment exhaust system	92	1	CARRERA 2/4 M 114,479, M 553
12	964 006 109 17	sticker engine specifications	94	1	CARRERA 2/4 (AUS)
12	964 006 106 00	sticker adjustment exhaust system		1	(S)
12	930 006 525 21	sticker engine specifications	94	1	TURBO (S)
12	930 006 513 54	sticker engine specifications	94	1	TURBO (AUS)
12	964 006 107 00	sticker adjustment exhaust system		1	(AUS)
12	964 006 107 07	sticker adjustment exhaust system	94	1	(AUS)
13	911 701 250 00	sticker alarm system		2	
14	928 701 145 05	sticker for emergency wheel german		1	
14	996 361 701 00	sticker for emergency wheel english		1	
14	996 361 701 01	sticker for emergency wheel french		1	
14	928 701 148 05	sticker for emergency wheel italian		1	

Pos	Part Number	Name	Remarks	Qty	Model	Pos	Part Number	Name	Remarks	Qty	Model
14	928 701 149 00	sticker for emergency wheel spanish		1							
16	928 701 102 02	indication sticker sekuriflex german		1							
16	928 701 102 03	indication sticker sekuriflex french		1							
16	928 701 102 04	indication sticker sekuriflex italian		1							
16	928 701 102 05	indication sticker sekuriflex spanish		1							
		- -- E N D -- -									

Model	Year	MG	SG	Illustration	Restrictions	Update		
964	94	0	02	2-05		194	11:49	24.11.2005

Pos	Part Number	Name	Remarks	Qty	Model
		roof transport system			
1	911 801 055 00	set of main supports		1	COUPE
(1)	911 801 055 60	set of main supports MAX. 35 KG		1	TARGA/CABRIO
1A	928 801 011 02	cylinder lock with keys state lock number		1	
2	928 801 061 02	retaining strip 1 set		1	
2A	928 801 903 02	rubber support for skis 1 set		1	
2B	928 801 193 02	retaining strap 1 set		1	
3	928 801 063 02	ski box	/L	1	
(3)	928 801 064 02	ski box	/R	1	
5	928 801 081 02	roof rack set		1	
		- -- E N D -- -			

Model	Year	MG	SG	Illustration	Restrictions	Update		
964	94	0	02	2-05		194	11:49	24.11.2005

Pos	Part Number	Name	Remarks	Qty	Model
		roof transport system			
1	911 801 055 00	set of main supports		1	COUPE
(1)	911 801 055 60	set of main supports MAX. 35 KG		1	TARGA/CABRIO
1A	928 801 011 02	cylinder lock with keys state lock number		1	
2	928 801 061 02	retaining strip 1 set		1	
2A	928 801 903 02	rubber support for skis 1 set		1	
2B	928 801 193 02	retaining strap 1 set		1	
3	928 801 063 02	ski box	/L	1	
(3)	928 801 064 02	ski box	/R	1	
5	928 801 081 02	roof rack set		1	
		- -- E N D -- -			

Model	Year	MG	SG	Illustration	Restrictions	Update		
964	94	0	02	2-06		194	11:49	24.11.2005

Pos	Part Number	Name	Remarks	Qty	Model
		roof transport system			
1	928 801 019 02	set of surf board supports		1	
2	928 801 017 02	set - canoe carrier		1	
3	928 801 085 02	ladder support mandrel set		X	
4	928 801 093 02	set - bike carrier for racing bike		1	
5	928 801 095 02	set - bike carrier for standard bike		1	
6	928 801 079 02	safety rope		1	
7	928 801 097 02	support for bicycle		1	
		- -- E N D -- -			

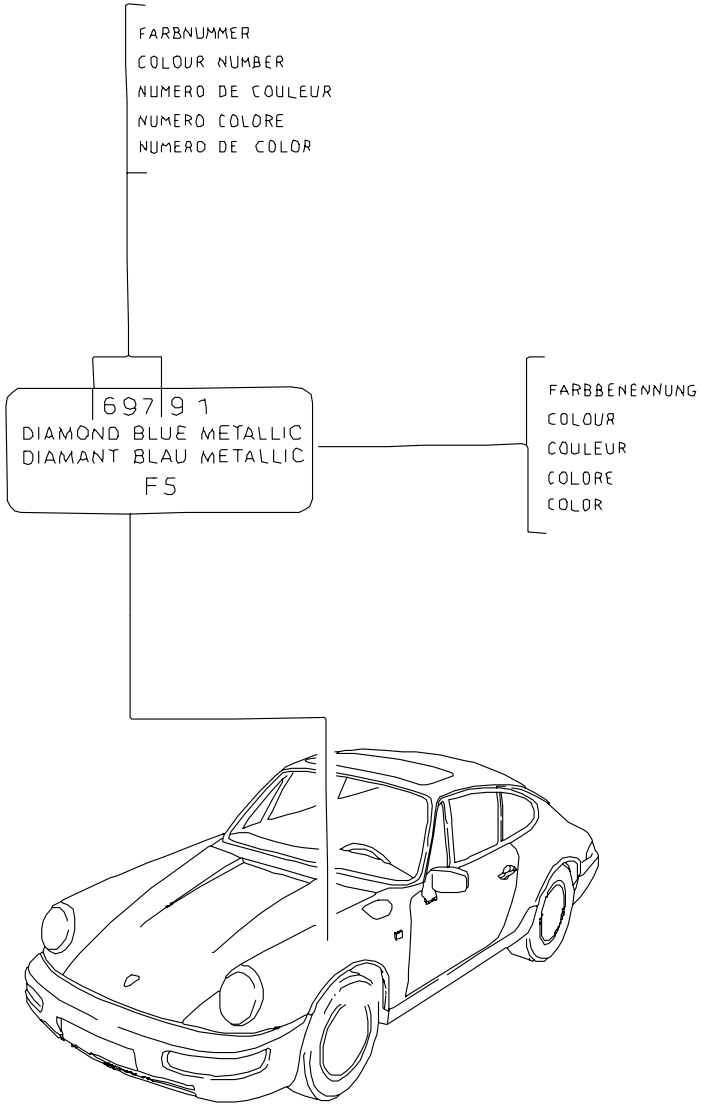

Pos	Part Number	Name	Remarks	Qty	Model
		paint touch-up applicator			
-	911 095 932 20	paint touch-up applicator		X	
	548	apricot beige			
	347	dark blue			
	908	grand prix white			
	60M	linen			
	22C	murano green			
	38B	maritime blue			
	22R	mint green			
	700	black			
	719	black	93-		
	82N	rubystone red			
	22S	signal green			
	80K	guards red			
	12G	speed yellow	93-		
	39E	riviera blue	94-		
	39D	amaranth violet	94-		
-	911 095 933 20	paint touch-up applicator set comprising: paint touch-up applicator primer paint touch-up applicator clear lacquer		X	
	37Z	amazon green metallic			
	39A	amazon green metallic			
	38A	amethyst metallic			
	37U	cobalt blue metallic			
	40L	cognac brown metallic			
	697	diamond-blue metallic			
	82H	coral red metallic			
	35V	marine blue metallic			

Pos	Part Number	Name	Remarks	Qty	Model	Pos	Part Number	Name	Remarks	Qty	Model
	980	silver metallic									
	550	linen grey metallic									
	738	black-metallic	-92								
	746	black-metallic	93-								
	81L	velvet red metallic									
	22D	slate grey metallic									
	693	stone grey metallic									
	92E	polar silver metallic									
	22E	forest green metallic									
	37B	baltic blue metallic									
	22L	oak green metallic									
	37W	midnight blue metallic									
	37X	horizon blue metallic									
	83E	raspberry red metallic									
	23I	wimbledon green metallic									
	37E	violet blue metallic									
	39N	iris blue metallic	94-								
	39R	aventurine green metallic	94-								
	39G	violet metallic	94-								
		- -- E N D -- -									

Model	Year	MG	SG	Illustration	Restrictions	Update		
964	94	0	05	5-00		194	11:50	24.11.2005

Pos	Part Number	Name	Remarks	Qty	Model
		securing liquid sealing compound preservative agent			
		securing liquid			
-	928 101 921 00	loctite -270- 10 CCM high strength		X	
		sealing compound			
-	000 043 010 00	loctite -574- 50 CCM		X	
		loctite adhesive set for pasting metal glass ceramics thermoset plastic comprising:		X	
-	000 043 051 00	adhesive loctite -312- 50 CCM		X	
-	000 043 202 65	loctite AKTIVATOR NF 736 180 CCM		X	
-	000 043 004 00	mounting paste optimoly ht 1 90-g tube		X	
-	000 043 005 00	grease for drive shaft OPTIMOL - OLISTAMOLY 1 90-g tube		X	
-	000 043 204 21	grease for lock cylinder spraying can		X	
		preservative agent			
-	999 571 062 00	care kit comprising: suitcase		1	
-	999 901 013 40	liquid preservative		1	
-	999 901 014 41	cleaning agents		1	
-	999 901 015 40	polisher		1	
-	999 901 016 40	tar remover		1	

Model	Year	MG	SG	Illustration	Restrictions	Update		
964	94	0	05	5-00		194	11:50	24.11.2005

Pos	Part Number	Name	Remarks	Qty	Model
-	999 901 017 40	dashboard cleaner		1	
-	999 901 018 40	paint polish		1	
-	999 901 019 41	insect remover		1	
-	999 901 020 40	spot remover		1	
-	999 901 021 40	polishing cotton		1	
-	999 901 022 40	polishing cloth		1	
-	000 044 000 02	preservative agent 250 ML		X	
-	999 901 017 41	window cleaner summer 250 ML		X	
-	999 901 033 40	window cleaner winter 1000 ML		X	
-	999 901 036 40	car shampoo refilling bottle 1000 ML		X	
-	999 917 803 00	window cleaner spray bottle 250 ML		X	
-	928 628 931 00	silicone remover 1000 ML		X	
-	999 901 030 40	rim cleaner spray bottle 500 ML		X	
-	999 901 031 40	rim cleaner refilling bottle 1000 ML		X	
		- -- E N D -- -			

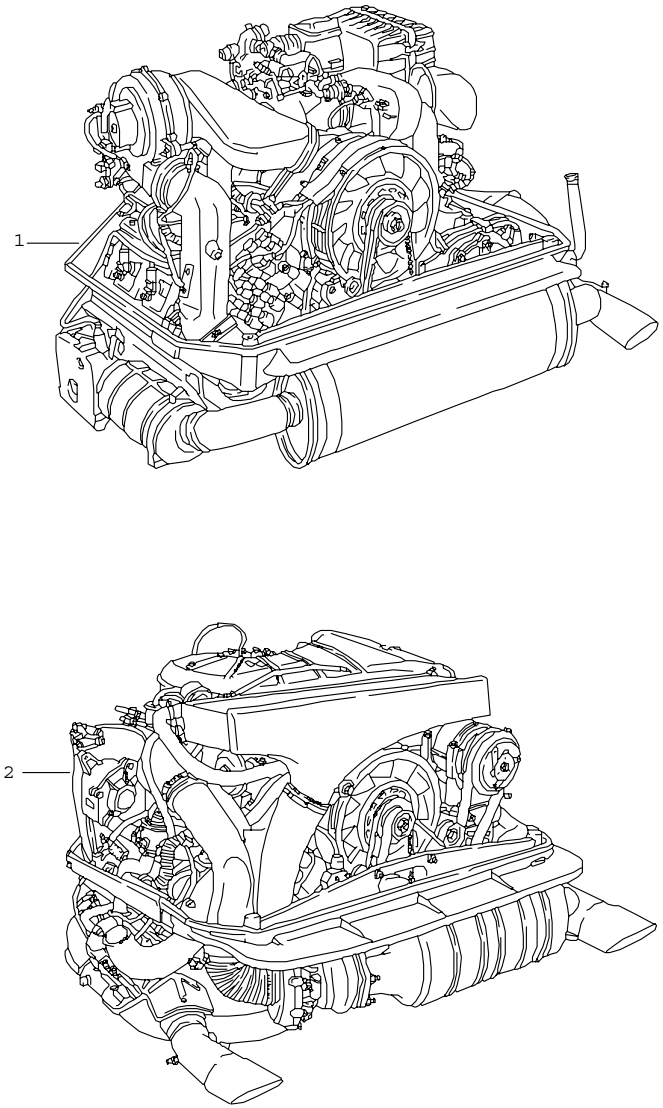

Pos	Part Number	Name	Remarks	Qty	Model
		replacement engine ready for installation			
1	> 964 100 264 01	engine	89	1	M64.01
1	> 964 100 264 31	engine	90	1	M64.01
1	> 964 100 264 41	engine	91-	1	M64.01
1	> 964 100 264 02	engine		1	M64.02
1	> 964 100 264 03	engine	92	1	M64.03 CARRERA RS
1	> 964 100 264 43	engine	92	1	M64.03 M 002
(1)	> 964 100 964 00	short engine		1	M64.01/02
2	> 930 100 269 00	engine		1	M30.69
2	930 100 269 01	engine		1	M30.69 (J)
2	> 964 100 264 50	engine		1	M64.50
		- -- E N D -- -			

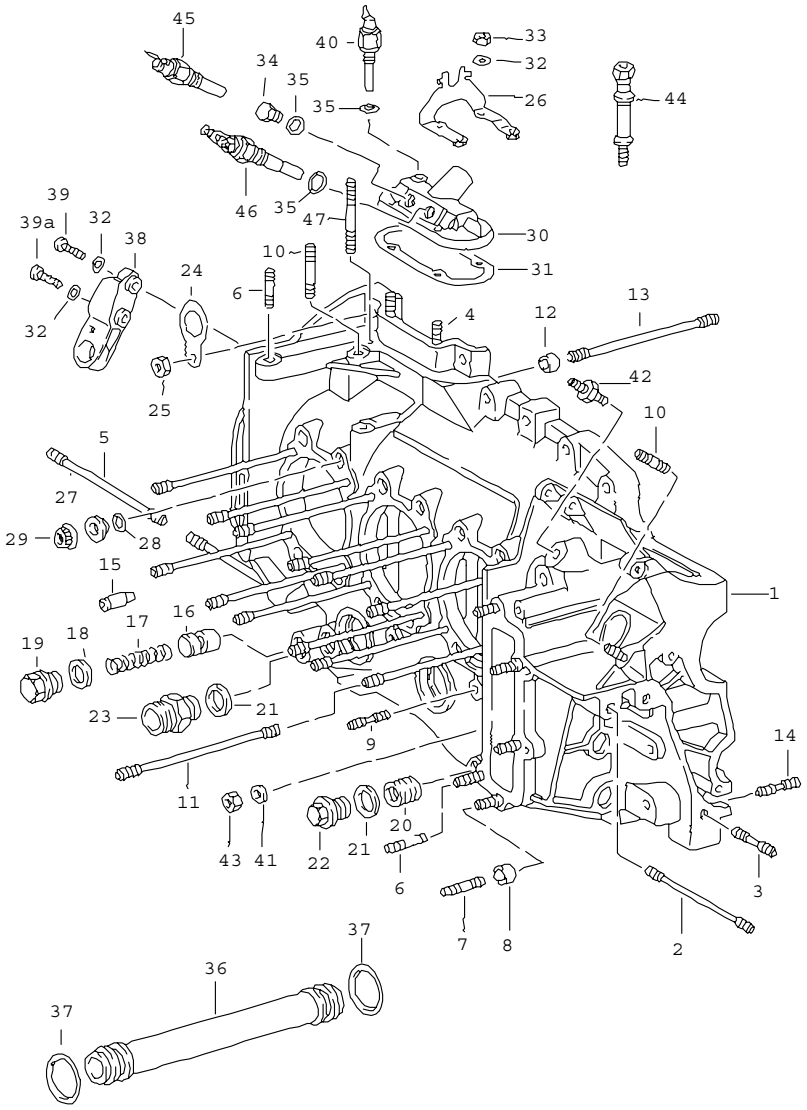

Pos	Part Number	Name	Remarks	Qty	Model
		crankcase left			
		see technical information group 1 NR. 4/94			
1	964 101 905 10	crankcase with studs		1	M64.01/02/03
1	964 101 905 10	crankcase with studs		1	M64.50
1	930 101 918 01	crankcase with studs		1	M30.69
2	999 062 302 02	stud BM 10 X 90		1	M64.01/02/03
3	999 062 301 02	stud BM 10 X 35		1	M64.01/02/03
4	999 062 085 02	stud BM 6 X 20		4	
5	999 062 099 02	stud BM 10 X 105		1	
5	999 062 192 02	stud BM 10 X 102		1	
6	999 062 008 02	stud BM 8 X 25		6	
7	999 062 044 02	stud BM 8 X 30		4	
8	901 101 145 00	dowel sleeve		4	
9	999 062 091 02	stud BM 6 X 30		6	
10	999 062 009 02	stud BM 8 X 28		1	
11	993 101 170 51	stud		24 12	M64.01/02/03 M30.69 M64.50
11	993 101 170 51	stud		12	M64.50
12	901 101 195 00	dowel sleeve		2	
13	959 101 174 01	stud		2	
14	999 062 115 02	stud BM 8 X 32		1	

Pos	Part Number	Name	Remarks	Qty	Model
15	964 101 020 00	splash valve		6	
15	964 101 020 50	splash valve oversize		6	
16	911 107 512 00	piston		1	
17	901 107 531 00	compression spring		1	
18	900 123 106 30	sealing ring A 18 X 24		1	
19	999 064 026 02	screw plug M 18 X 1,5		1	
20	999 504 127 00	threaded insert M 20 X 1,5		1	
21	900 123 118 30	sealing ring A 22 X 27		2	
22	944 107 197 01	screw plug M 20 X 1,5		1	
23	999 136 008 09	connection piece		1	
24	901 101 151 00	clip		1	
25	999 084 095 02	lock nut M 8		1	
26	964 110 313 01	support	-90	1	M64.01/02
(26)	964 110 313 02	support	91-	1	M64.01/02/03
27	964 101 313 02	washer		13	M64.01/02/03 M64.50
27	930 101 161 00	washer		14	M30.69
28	999 701 006 40	o-ring 8 X 2		13	
29	959 101 172 00	nut		13	M64.01/02/03 M64.50
29	999 084 117 01	lock nut M 10 X 1		14	M30.69
30	930 107 073 02	cover		1	M64.01/02/03 M30.69
30	964 107 073 20	cover		1	M64.50
31	930 107 791 02	gasket		1	
32	N 011 524 7	washer A 6,4		2	
33	999 084 094 02	lock nut M 6		4	
34	N 016 155 3	screw plug A M 14 X 1,5		1	
35	900 123 007 30	sealing ring A 14 X 18		3	
36	901 107 351 01	oil tube		4	
(36)	930 107 040 01	repair kit oil tube divided		1	
37	999 707 112 40	round seal 25 X 6		8	
38	964 101 187 00	support	-89	1	M64.01/02
38	964 101 187 01	support	90-	1	
39	N 010 217 9	hexagon-head bolt M 6 X 20	-89 90-	2 1	
39A	900 074 015 02	hexagon-head bolt M 6 X 30	90-	1	
40	930 606 117 03	temperature switch		1	M30.69
41	900 025 008 09	washer A 10,5		1	
42	901 107 375 00	screw socket		1	M30.69
43	900 076 078 01	hexagon nut M 10 X 1,25		1	
44	964 110 317 01	threaded bolt long		2	M 454
44	964 110 319 01	threaded bolt short		1	M 454
45	930 606 117 00	temperature switch		1	M64.50
46	930 617 118 00	temperature switch		1	M64.50
47	999 062 147 02	stud BM 8 X 62		1	

- -- E N D -- -

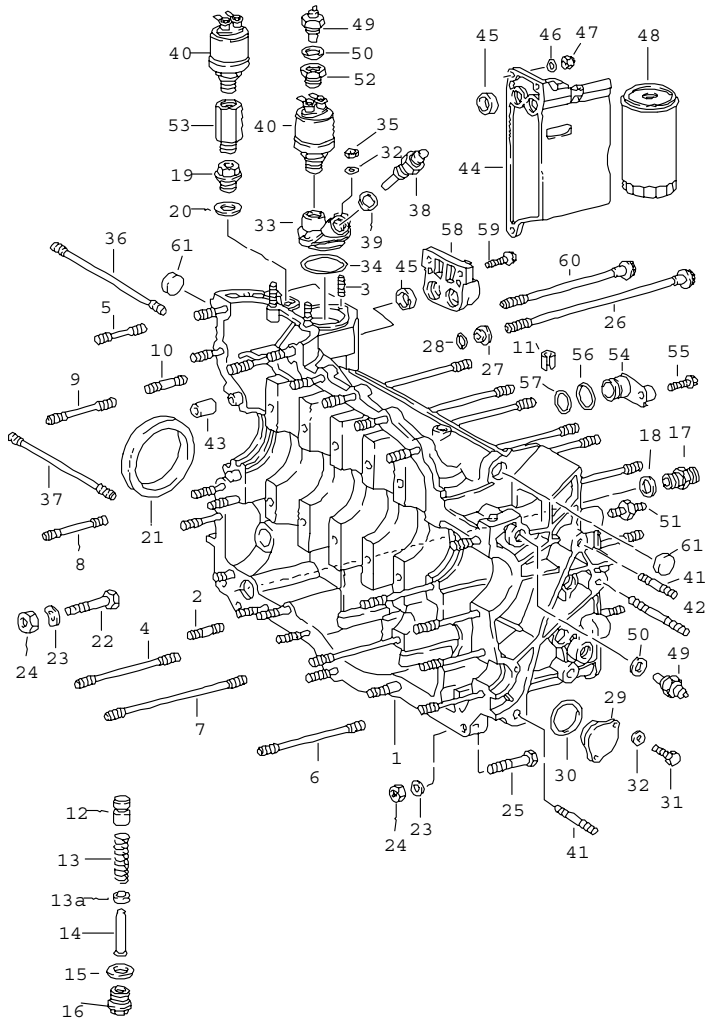

Pos	Part Number	Name	Remarks	Qty	Model
		crankcase right			
		see technical information group 1 NR. 4/94			
1	964 101 905 10	crankcase with studs		1	M64.01/02/03
1	964 101 905 10	crankcase with studs		1	M64.50
1	930 101 918 01	crankcase with studs		1	M30.69
2	999 062 007 02	stud BM 8 X 22		3	
3	999 062 071 02	stud BM 6 X 16		2	
4	996 101 175 70	stud		1	
5	999 062 115 02	stud BM 8 X 32		13	
6	999 062 156 02	stud BM 8 X 78		3	
7	999 062 051 02	stud BM 8 X 108		1	
8	999 062 075 02	stud BM 8 X 48		2	
9	999 062 138 02	stud BM 8 X 52		1	
10	999 062 009 02	stud BM 8 X 28		1	
11	900 095 025 01	roll pin 8 X 16		1	
12	911 107 512 00	piston		1	
13	930 107 531 01	compression spring		1	
13A	964 107 532 00	spacer ring		1	
14	930 107 533 00	guide sleeve		1	
15	900 123 106 30	sealing ring A 18 X 24		1	

Pos	Part Number	Name	Remarks	Qty	Model
16	999 064 026 02	screw plug M 18 X 1,5		1	
17	965 207 315 00	screw socket		1	
18	900 123 141 30	sealing ring A 25 X 30		1	
19	900 219 009 30	screw plug M 18 X 1,5		1	
20	900 123 140 30	sealing ring A 18 X 22		1	
21	999 113 461 40	radial sealing ring 90 X 110 X 11		1	
22	900 074 139 02	hexagon-head bolt M 8 X 55		1	M64.01/02/03 M64.50
22	900 074 040 02	hexagon-head bolt M 8 X 50		1	M30.69
23	900 025 007 02	washer A 8,4		25	
24	999 084 095 02	lock nut M 8		23	
25	900 074 134 02	hexagon-head bolt M 8 X 45		1	
26	959 101 173 01	screw		11	M64.01/02/03 M64.50
26	930 101 173 03	screw		11	M30.69
27	964 101 313 02	washer		11	M64.01/02/03 M64.50
27	930 101 161 00	washer		11	M30.69
28	999 701 006 40	o-ring 8 X 2		11	
29	930 105 165 00	cover		1	
30	999 707 315 40	o-ring 33,3 X 2,4		1	
31	900 075 355 02	screw M 6 X 16		2	
32	N 011 524 7	washer A 6,4		4	
33	964 101 768 00	cover		1	M64.01/02/03
33	930 107 767 02	cover		1	M30.69 M64.50
34	999 707 314 40	o-ring 39,2 X 3		1	
35	999 084 094 02	lock nut M 6		2	
36	999 062 225 02	stud BM 10 X 140		1	
37	999 062 099 02	stud BM 10 X 105		1	
38	911 606 112 00	remote temperature sensor		1	M64.01/02/03
38	944 606 125 00	temperature sensor		1	M30.69 M64.50
39	900 123 007 30	sealing ring A 14 X 18		1	
40	928 606 203 01	oil pressure sender		1	
41	999 062 301 02	stud M 10 X 35		2	M64.01/02/03
41	999 061 056 02	stud M 10 X 15		1	M30.69 M64.50
42	999 062 302 02	stud M 10 X 90		1	M64.01/02/03
43	901 101 195 00	dowel sleeve		2	
44	930 107 057 01	bracket		1	M30.69 M64.50
45	999 704 172 50	sealing ring 16,3 X 22		2	M30.69 M64.50
46	900 025 007 02	washer A 8,4		3	M30.69 M64.50
47	999 084 095 02	lock nut M 8		3	M30.69 M64.50
48	944 107 201 03	oil filter		1	M30.69 M64.50
49	911 606 112 00	remote temperature sensor		1	
50	900 123 008 30	sealing ring A 14 X 20		1	
51	901 107 375 00	screw socket		1	M30.69

Pos	Part Number	Name	Remarks	Qty	Model
52	964 107 705 22	screw socket		1	M64.50
53	964 107 706 20	screw socket		1	M64.50
54	964 207 317 00	adapter		1	
55	900 067 247 02	screw M 8 X 30		1	
56	999 707 309 40	o-ring 26 X 1		1	
57	999 707 316 40	o-ring 21,89 X 2,62		1	
58	993 107 215 02	oil gallery		1	
59	900 075 447 02	screw M 8 X 25		2	
60	964 101 174 00	screw		2	
61	911 101 185 00	plug A 22		2	
		- -- E N D -- -			

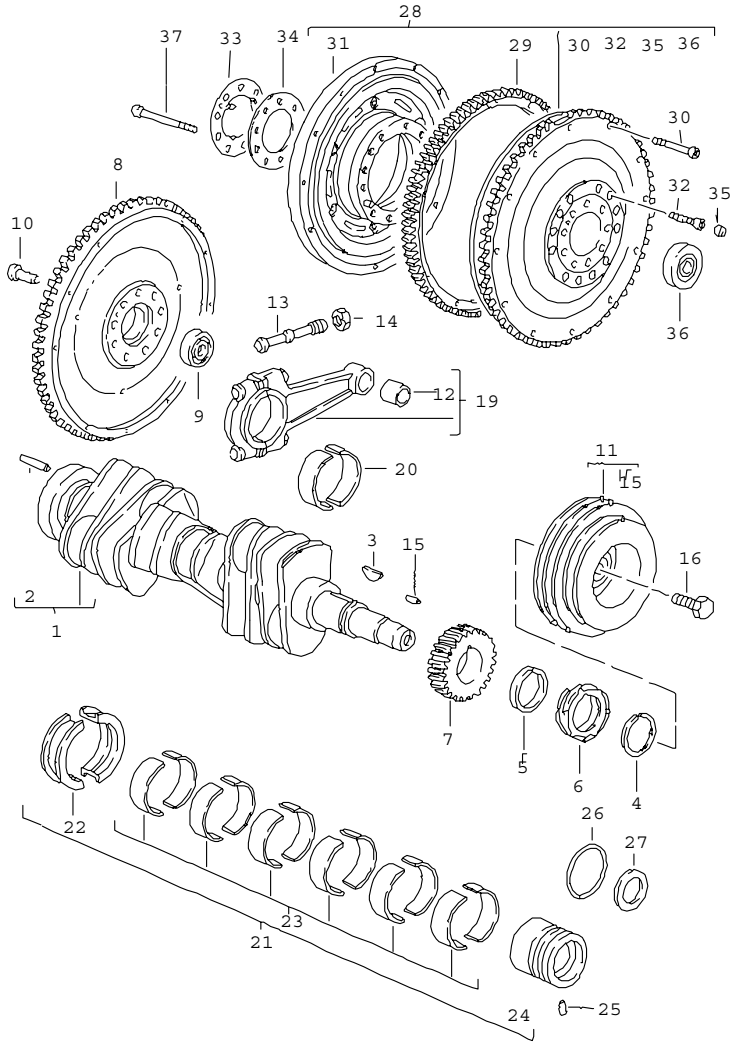

Pos	Part Number	Name	Remarks	Qty	Model
		crankshaft			
1	> 964 102 021 04	crankshaft		1	M64.01/02/03 M64.50
1	> 930 102 014 09	crankshaft		1	M30.69
2	900 095 031 00	tensioning sleeve 6 X 16		1	
3	901 102 147 00	woodruff key		1	
4	901 102 148 00	circlip number 0		1	
4	901 102 148 01	circlip number 1		1	
4	901 102 148 02	circlip number 2		1	
4	901 102 148 03	circlip number 3		1	
5	901 102 145 00	intermediate ring		1	
6	930 102 112 00	drive wheel		1	
7	-	see group 1/03/15		.	M64.01/02/03 M64.50
7	901 102 111 00	timing gear number 0		1	M30.69
7	901 102 111 10	timing gear number 1		1	M30.69
8	> 964 102 239 00	flywheel	-89	1	M64.01
(8)	> 964 102 239 31	flywheel without ring gear	92	1	M64.03 CARRERA RS
-	964 114 143 31	ring gear	92	1	M64.03 CARRERA RS
9	931 102 111 00	deep-groove ball bearing		1	
10	930 102 206 00	pan-head screw		9	M64.01/02
10	928 102 151 01	pan-head screw		9	M64.03 CARRERA RS
11	964 102 050 01	pulley		1	M64.01/02/03
(11)	930 102 024 06	pulley		1	M30.69
(11)	964 102 150 20	pulley		1	M64.50

Pos	Part Number	Name	Remarks	Qty	Model
12	930 103 134 01	connecting rod bush		6	
13	964 103 176 00	connecting rod bolt		12	
14	930 103 174 00	connecting rod nut	-92	12	
14	993 103 174 02	connecting rod nut	93-	12	
15	N 013 352 1	straight pin 4 M 6 X 16		1	M64.01/02/03 M64.50
15	N 101 090 01	straight pin 5 M 6 X 14 M 14 X 1,5 X 40		1	M30.69 M64.50
16	900 378 124 01	hexagon-head bolt M 14 X 1,5 X 40		1	M64.01/02/03 M64.50
16	999 093 005 02	hexagon-head bolt M 12 X 1,5 X 22		1	M30.69
19	964 103 020 53	connecting rod weight group: 3= 615 - 624 G	-91	6	
19	964 103 020 63	connecting rod weight group: 3= 615 - 624 G	92-	6	
19	964 103 020 54	connecting rod weight group: 4= 624 - 633 G	-91	6	
19	964 103 020 64	connecting rod weight group: 4= 624 - 633G	92-	6	
19	964 103 020 65	connecting rod weight group: 5= 633 - 642 G		6	
19	964 103 020 66	connecting rod weight group: 6= 642 - 651 G		6	
19	964 103 020 67	connecting rod weight group: 7= 651 - 660 G		6	
19	964 103 020 68	connecting rod weight group: 8= 660 - 669 G		6	
19	964 103 020 59	connecting rod weight group: 9= 669 - 678 G	-91	6	
19	964 103 020 69	connecting rod weight group: 9= 669 - 678G	92-	6	
19	964 103 020 60	connecting rod weight group: 10= 678 - 687 G	-91	6	
19	964 103 020 70	connecting rod weight group: 10= 678 - 687G	92-	6	
19	964 103 020 61	connecting rod weight group: 11= 687 - 696 G	-91	6	
19	964 103 020 71	connecting rod weight group: 11= 687 - 696G	92-	6	
>>>	930 103 975 00	1 set connecting rods comprising: connecting rods		1 6	
20	A 930 103 147 15	connecting-rod bearing		12	
20	930 103 147 15	connecting-rod bearing		6	
20	930 103 147 50	connecting-rod bearing oversize 0,25 MM		12	
20	930 103 147 60	connecting-rod bearing oversize 0,50 MM		12	
21	964 101 901 00	set of crankshaft bearings		1	
21	964 101 901 51	set of crankshaft bearings oversize inner 0,25 MM		1	
21	964 101 901 56	set of crankshaft bearings oversize inner 0,50 MM		1	
21	964 101 901 61	set of crankshaft bearings oversize outer 0,25 MM		1	

Pos	Part Number	Name	Remarks	Qty	Model
21	964 101 901 71	set of crankshaft bearings oversize inner 0,25 MM oversize outer 0,25 MM		1	
21	964 101 901 76	set of crankshaft bearings oversize inner 0,50 MM oversize outer 0,25 MM		1	
22	930 101 131 15	bearing shell I		2	
22	930 101 131 51	bearing shell I oversize inner 0,25 MM		2	
22	930 101 131 56	bearing shell I oversize inner 0,50 MM		2	
22	930 101 131 61	bearing shell I oversize outer 0,25 MM		2	
22	930 101 131 71	bearing shell I oversize inner 0,25 MM outer 0,25 MM		2	
22	930 101 131 76	bearing shell I oversize inner 0,50 MM outer 0,25 MM		2	
23	930 101 132 15	bearing shell II-VII		12	
23	930 101 132 51	bearing shell II-VII oversize inner 0,25 MM		12	
23	930 101 132 56	bearing shell II-VII oversize inner 0,50 MM		12	
23	930 101 132 61	bearing shell II-VII oversize outer 0,25 MM		12	
23	930 101 132 71	bearing shell II-VII oversize inner 0,25 MM outer 0,25 MM		12	
23	930 101 132 76	bearing shell II-VII oversize inner 0,50 MM outer 0,25 MM		12	
24	964 101 138 01	bearing sleeve VIII		1	
24	964 101 138 54	bearing sleeve VIII oversize inner 0,25 MM		1	
24	964 101 138 55	bearing sleeve VIII oversize inner 0,50 MM		1	
24	964 101 138 65	bearing sleeve VIII oversize outer 0,25 MM		1	

Pos	Part Number	Name	Remarks	Qty	Model
24	964 101 138 66	bearing sleeve VIII oversize inner 0,25 MM outer 0,25 MM		1	
24	964 101 138 67	bearing sleeve VIII oversize inner 0,50 MM outer 0,25 MM		1	
25	900 012 061 00	straight pin 5 H 8 X 10		1	
26	* 999 707 285 40	round seal 51 X 4,5		1	
27	* 999 113 290 41	sealing ring 30 X 50 X 8		1	
28	A 964 114 011 02	double-mass flywheel	90	1	M64.01
28	A 964 114 011 03	double-mass flywheel		1	M64.01 C4
28	964 114 011 04	double-mass flywheel		1	M64.01 C4
28	A 964 114 012 00	double-mass flywheel	92	1	M64.01 C2 M64.03 M 002
28	964 114 012 02	double-mass flywheel	-92	1	M64.01 C2 M64.03 M 002
28	964 114 012 02	double-mass flywheel	93-	1	M64.01 C2
(28)	A 964 114 012 51	double-mass flywheel		1	M30.69
(28)	964 114 012 51	double-mass flywheel		1	M30.69 M64.50
29	A 964 114 143 01	ring gear	90	1	M64.01
29	964 114 143 02	ring gear only for double-mass flywheel 964 114 011 02/03/04	91-	1	M64.01
30	999 510 039 02	pan-head screw M 7 X 34 for double-mass flywheel 964 114 011 02/03/04		12	
30	999 510 015 02	pan-head screw M 8 X 40 for double-mass flywheel 964 114 012 00/01/50/51		9	
31	964 114 025 01	flywheel	90	1	M64.01
31	964 114 025 01	secondary flywheel	91-	1	M64.01 C4
32	999 218 046 02	pan-head screw M 8 X 1 X 21	90-	12	
33	950 114 283 00	spring washer for double-mass flywheel 964 114 011 02/03/04	90-	1	M64.01
34	950 114 281 00	washer for double-mass flywheel 964 114 011 02/03/04	90-	1	M64.01
35	900 036 021 02	cover B 14	90-	12	
36	999 052 169 00	deep-groove ball bearing 15 X 50 X 11	90-	1	
37	999 119 015 01	pan-head screw M 10 X 1,25 X 70 for double-mass flywheel 964 114 011 02/03/04		9	
37	999 119 017 01	pan-head screw M 10 X 1,25 X 62 for double-mass flywheel 964 114 012 00/01/02 964 114 012 50/51		9	

- -- E N D -- -

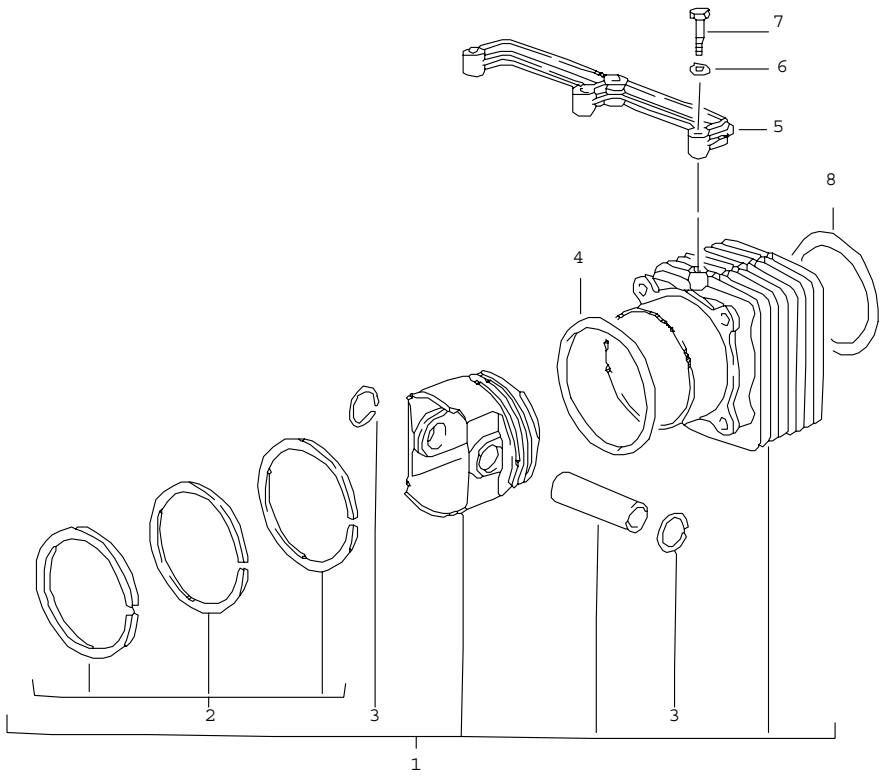

Pos	Part Number	Name	Remarks	Qty	Model
		cylinder with pistons group 5 MAHLE			
1	964 103 915 12	cylinder with pistons number plate -- / - 644 - 652 G	-89	6	M64.01/02
1	964 103 915 22	cylinder with pistons number plate -- / - 644 - 652 G M >> 62M 06836 M >> 62M 52757	90-	6	M64.01/02 M64.01 M64.02
1	964 103 915 22	cylinder with pistons number plate -- / - 644 - 652 G M 62M 06837 >> M 62M 52758 >>	91-	6	M64.01/02 M64.01 M64.02
1	964 103 915 27	cylinder with pistons number plate -- 644 - 648 G		6	M64.03
1	930 103 954 08	cylinder with pistons number plate -- / - 619 - 627 G	91	6	M30.69
1	930 103 954 08	cylinder with pistons number plate -- / - 619 - 627 G	92-	6	M30.69
1	964 103 917 21	cylinder with pistons number plate -- / - 584 - 592 G		6	M64.50
1	964 103 915 13	cylinder with pistons number plate + / ++ 652 - 660 G	-89	6	M64.01/02
1	964 103 915 22	cylinder with pistons number plate + / ++ 652 - 660 G M >> 62M 06836 M >> 62M 52757	90-	6	M64.01/02 M64.01 M64.02

Pos	Part Number	Name	Remarks	Qty	Model
1	964 103 915 23	cylinder with pistons number plate + / ++ 652 - 660 G M 62M 06837 >> M 62M 52758 >>	91-	6	M64.01/02 M64.01 M64.02
1	930 103 954 09	cylinder with pistons number plate + / ++ 627 - 636 G	91	6	M30.69
1	930 103 954 09	cylinder with pistons number plate + / ++ 627 - 636 G	92-	6	M30.69
1	964 103 917 22	cylinder with pistons number plate + / ++ 592 - 600 G group 6 MAHLE		6	M64.50
1	964 103 915 19	cylinder with pistons number plate -- / - 644 - 652 G	-89	6	M64.01/02
1	964 103 915 19	cylinder with pistons number plate -- / - 644 - 652 G M >> 62M 06836 M >> 62M 52757	90-	6	M64.01/02 M64.01 M64.02
1	964 103 915 24	cylinder with pistons number plate -- / - 644 - 652 G M 62M 06837 >> M 62M 52758 >>	91-	6	M64.01/02 M64.01 M64.02
1	930 103 954 10	cylinder with pistons number plate -- / - 619 - 627 G	91	6	M30.69
1	930 103 954 10	cylinder with pistons number plate -- / - 619 - 627 G	92-	6	M30.69
1	964 103 917 23	cylinder with pistons number plate -- / - 584 - 592 G		6	M64.50
1	964 103 915 20	cylinder with pistons number plate + / ++ 652 - 660 G	-89	6	M64.01/02
1	964 103 915 20	cylinder with pistons number plate + / ++ 652 - 660 G M >> 62M 06836 M >> 62M 52757	90-	6	M64.01/02 M64.01 M64.02
1	964 103 915 25	cylinder with pistons number plate + / ++ 652 - 660 G M 62M 06837 >> M 62M 52758 >>	91-	6	M64.01/02 M64.01 M64.02
1	930 103 954 11	cylinder with pistons number plate + / ++ 627 - 636 G	91	6	M30.69
1	930 103 954 11	cylinder with pistons number plate + / ++ 627 - 636 G	92-	6	M30.69
1	964 103 917 24	cylinder with pistons number plate + / ++ 592 - 600 G piston rings MAHLE		6	M64.50
2	964 103 925 00	set of piston rings		6	M64.01/02/03
2	930 103 968 00	set of piston rings		6	M30.69
2	964 103 925 20	set of piston rings		6	M64.50
3	999 178 009 00	snap ring 23 X 1,8		12	M64.01/02/03 M64.50
3	900 908 019 00	ring 23 X 1,5		12	M30.69
4	999 707 152 40	o-ring 102 X 2		6	
5	993 104 391 00	bridge		2	M64.01/02/03
6	N 011 524 7	washer A 6,4		6	M64.01/02/03

Pos	Part Number	Name	Remarks	Qty	Model
7	900 074 015 02	hexagon-head bolt M 6 X 30		6	M64.01/02/03
8	964 104 115 20	sealing ring M 62M 06837 >> M 62M 52758 >>	91-	6	M64.01/02/03 M64.01 M64.02
8	930 104 381 01	cylinder head gasket		6	M30.69
8	964 104 115 20	sealing ring		6	M64.50
		- -- E N D -- -			

Pos	Part Number	Name	Remarks	Qty	Model

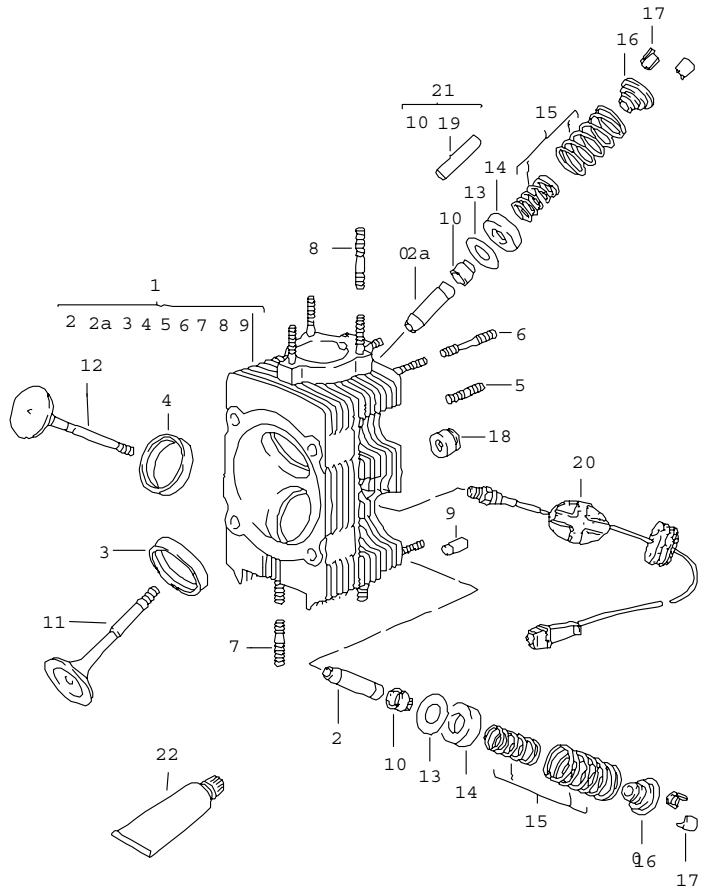

Pos	Part Number	Name	Remarks	Qty	Model
		cylinder head			
1	964 104 033 04	cylinder head without valves	-89	6	M64.01/02
1	964 104 033 06	cylinder head without valves see technical information group 1 NR. 2/00 M >> 62M 06836 M >> 62M 52757	90-	6	M64.01/02 M64.01 M64.02
1	> 964 104 033 08	cylinder head without valves M 62M 06837 >> M 62M 52758 >>	91-	6	M64.01/02/03 M64.01 M64.02
1	> 930 104 043 13	cylinder head without valves without valves		6	M30.69
1	964 104 033 21	cylinder head without valves		6	M64.50
2	964 104 321 50	valve guide 1st oversize		6	M64.01/02/03 M64.50
2	930 104 321 50	valve guide 1st oversize		6	M30.69
2A	964 104 321 52	valve guide 1st oversize		6	M64.01/02/03 M64.50
2A	930 104 321 53	valve guide 1st oversize		6	M30.69
3	930 104 331 50	valve seat ring intake oversize		6	
4	930 104 335 56	valve seat ring exhaust oversize		6	
5	999 062 006 02	stud BM 8 X 20		12	
6	999 062 041 02	stud BM 8 X 50		24	
7	999 062 007 02	stud BM 8 X 22		12	M64.01/02/03
7	999 062 239 02	stud BM 8 X 30		12	M30.69 M64.50

Pos	Part Number	Name	Remarks	Qty	Model
8	999 062 091 02	stud BM 6 X 30		18	M64.01/02/03
8	999 062 178 02	stud BM 8 X 120		12	M30.69 M64.50
9	999 012 006 00	straight pin		12	
10	964 104 111 06	valve stem seal		12	M64.01/02/03 M64.50
10	928 104 193 12	valve stem seal		12	M30.69
11	964 105 409 06	intake valve		6	M64.01/02/03 M30.69 M64.50
12	964 105 419 03	exhaust valve		6	M64.01/02/03
12	930 105 419 50	exhaust valve		6	M30.69
12	964 105 419 22	exhaust valve		6	M64.50
13	930 105 461 00	washer 0,5MM		12	
13	964 105 461 01	washer 0,25MM		12	
13	964 105 461 02	washer 1,5MM		12	
14	901 105 463 00	ring		12	
15	901 105 901 50	set of valve springs		12	
16	901 105 421 03	concave washer		12	
17	901 105 417 00	collet		24	
18	964 104 382 01	cylinder head nut		24	M64.01/02/03 M30.69
18	964 104 382 20	cylinder head nut		24	M64.50
19	000 043 204 48	sleeve for valve stem seal		1	
20	930 606 013 02	temperature sensor see workshop manual 993 GR.97-013		1	M64.01/02/03
21	964 104 901 00	set of seals for valve stem seal		1	M64.01/02/03 M64.50
22	000 043 300 86	sealing compound		1	

- -- E N D -- -

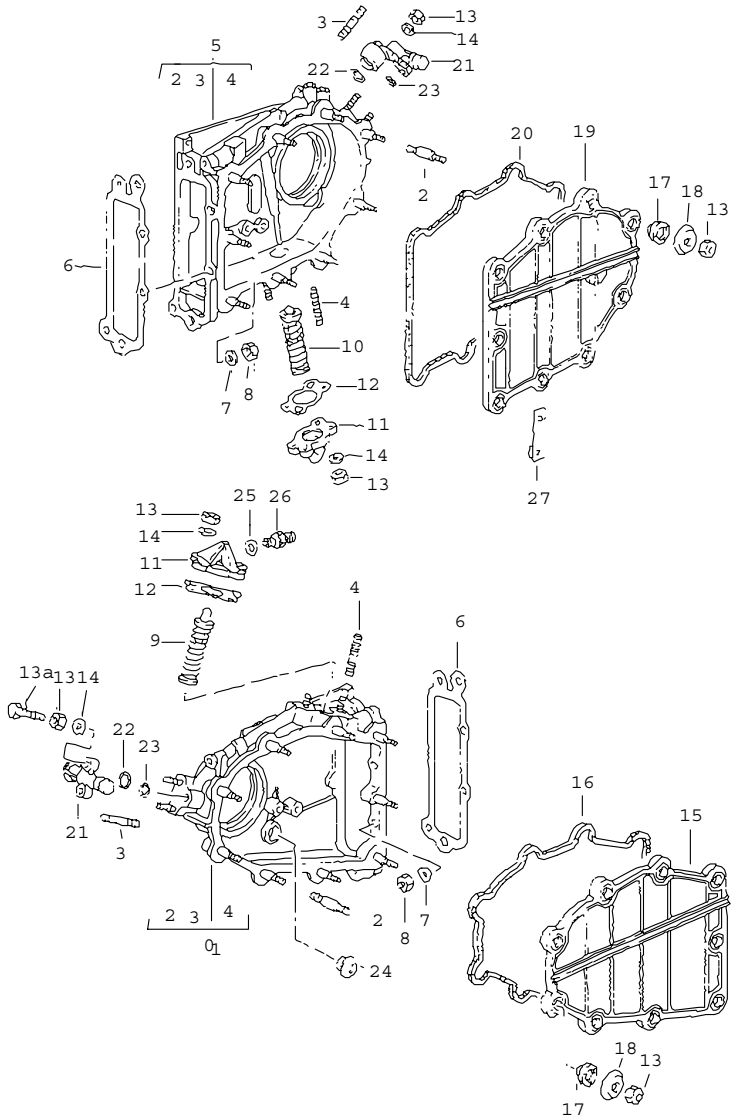

Pos	Part Number	Name	Remarks	Qty	Model
		chain case chain adjuster			M64.01/02/03 M64.50
1	964 105 093 01	chain case	/L	1	M64.01/02/03
1	964 105 093 20	chain case	/L	1	M64.50
2	964 105 583 01	bolt		18	
3	999 062 102 02	stud BM 6 X 22		4	
4	999 062 017 02	stud BM 6 X 18		4	
5	964 105 094 04	chain case	/R	1	
6	964 105 193 02	gasket		2	
7	999 025 194 30	washer 8,4 X 18 X 3		10	
8	999 084 095 02	lock nut M 8		10	
9	964 105 079 00	chain adjuster	/L	1	
10	964 105 080 00	chain adjuster	/R	1	
11	993 105 022 01	cover		2	M64.01/02/03
(11)	964 105 023 20	cover	/L	1	M64.50
(11)	964 105 022 20	cover	/R	1	M64.50
12	964 105 177 03	gasket		2	
13	999 084 094 02	lock nut M 6		26	
13A	999 217 127 02	screw M 6 X 20		2	M64.50
14	999 025 193 30	washer 6,4 X 14 X 3		8	
15	964 105 107 01	cover		1	
16	964 105 181 01	gasket		1	
17	964 105 140 01	thrust ring		18	
18	964 105 445 00	thrust washer		18	
19	964 105 108 01	cover		1	
20	964 105 182 00	gasket		1	

Pos	Part Number	Name	Remarks	Qty	Model
21	964 107 088 03	bridge		2	M64.01/02/03
21	964 107 088 20	bridge		2	M64.50
22	999 701 909 40	o-ring 6,7 X 3,53		2	
23	999 707 288 40	o-ring 6 X 2,5		2	
24	964 105 110 01	bearing		4	
25	900 123 043 30	sealing ring A 12 X 15,5		1	M64.50
26	N 020 704 2	connection piece A 8		1	M64.50
27	964 113 215 20	support		1	M64.50
		- -- E N D -- -			

Pos	Part Number	Name	Remarks	Qty	Model

Model	Year	MG	SG	Illustration	Restrictions	Update			
964	94	1	03	103-06		194	11:52	24.11.2005	PORSCHE PET PORSCHE

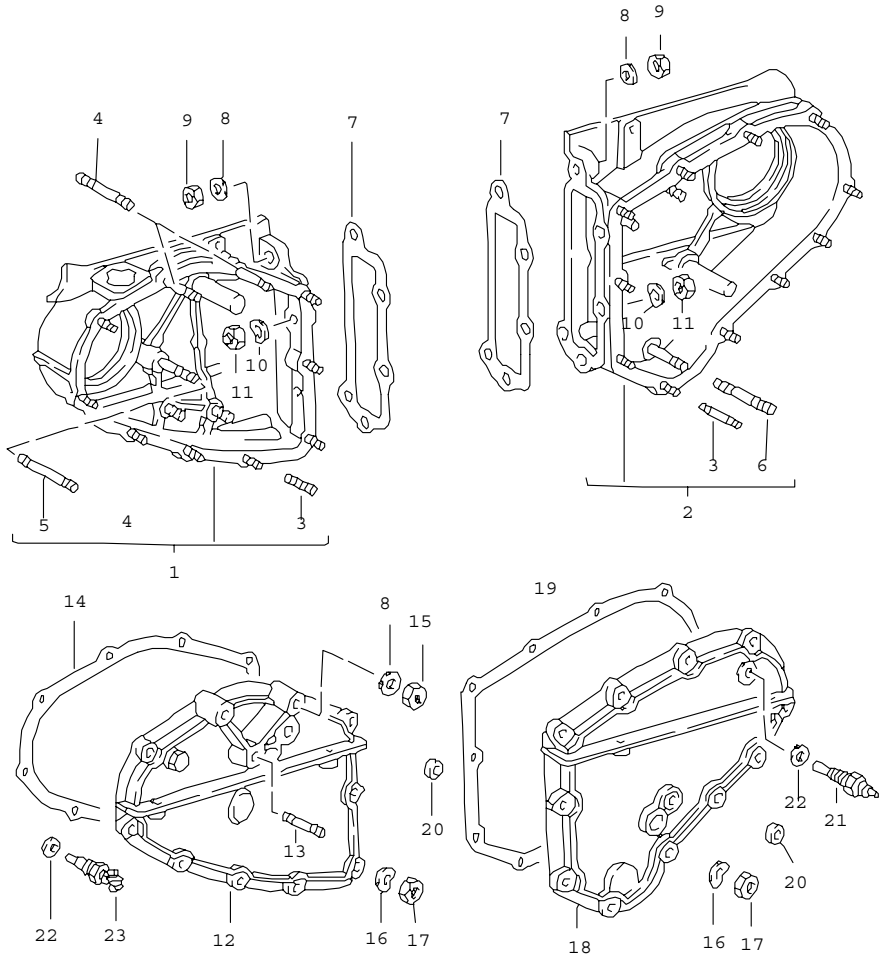

Pos	Part Number	Name	Remarks	Qty	Model
		chain case			M30.69
1	930 105 061 02	chain case	/L	1	
2	930 105 062 01	chain case	/R	1	
3	999 062 102 02	stud BM 6 X 22		19	
4	999 062 052 02	stud BM 8 X 42		2	
5	999 062 255 02	stud M 8 X 60		1	
6	999 062 041 02	stud M 8 X 50		1	
7	930 105 193 06	gasket		2	
8	900 031 014 30	washer 8,4		7	
9	900 910 022 02	lock nut M 8		5	
10	N 012 241 8	spring washer B 8		4	
11	900 076 025 02	hexagon nut M 8		4	
12	930 105 063 08	cover	/L	1	
13	999 062 010 02	stud BM 8 X 35		1	
14	930 105 191 03	gasket	/L	1	
15	900 084 004 02	hexagon nut M 8		2	
16	900 031 011 30	washer 6,4		17	
17	900 910 012 02	lock nut M 6		19	
18	930 105 064 10	cover	/L	1	
19	930 105 192 04	gasket	/R	1	
20	900 036 008 02	cover		2	
21	930 606 117 00	temperature switch		1	
22	900 123 007 30	sealing ring A 14 X 18		2	

Pos	Part Number	Name	Remarks	Qty	Model	Pos	Part Number	Name	Remarks	Qty	Model
23	930 617 118 00	temperature switch		1							
24	930 207 215 00	support		1							
		- -- E N D -- -									

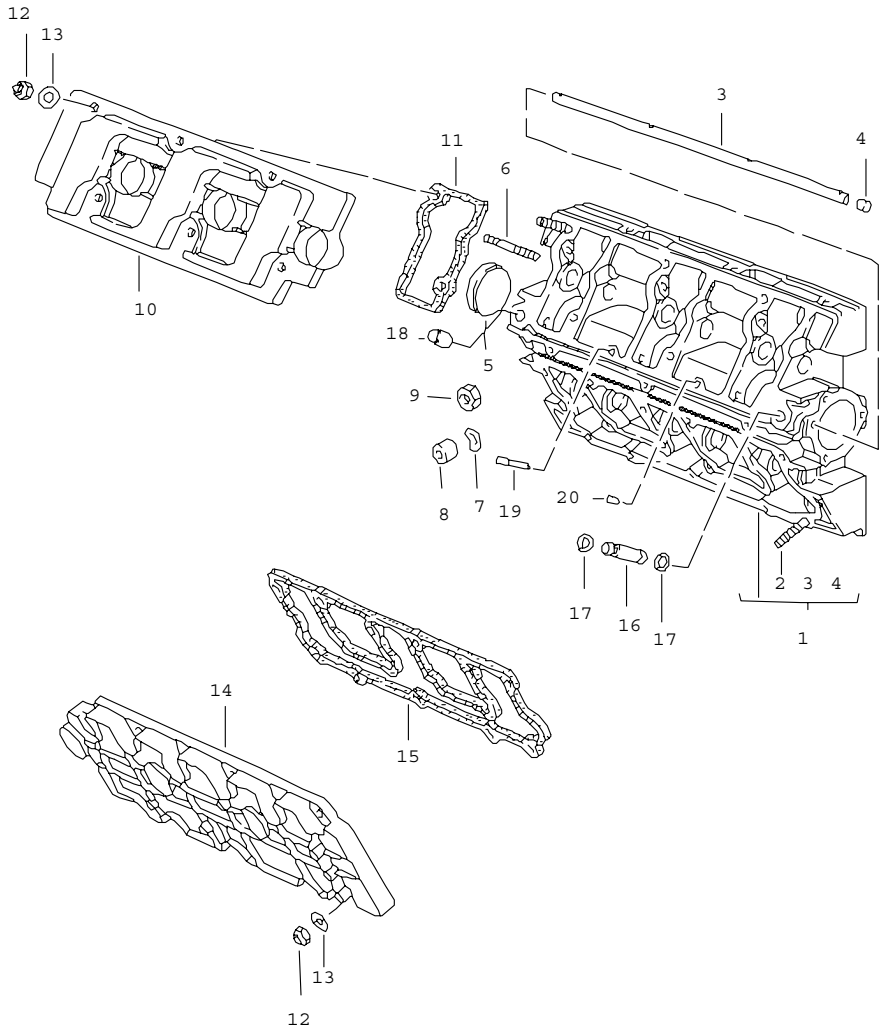

Pos	Part Number	Name	Remarks	Qty	Model
		camshaft housing			M64.01/02/03 M64.50
1	964 105 021 01	camshaft housing		2	M64.01/02/03
1	964 105 021 20	camshaft housing		2	M64.50
2	999 062 127 02	stud B M 6 X 25		34 12	M64.01/02/03 M64.50
2	999 062 010 02	stud BM 8 X 35		22	M64.50
3	930 105 362 00	oil splash tube		2	
4	901 105 379 00	plug		2	
5	930 105 161 00	cover		2	
6	999 062 102 02	stud BM 6 X 22	/R -91	3	
7	900 025 007 02	washer 8,4		36	
8	901 111 271 00	nut		6	
9	900 076 025 02	hexagon nut M 8		30	
10	964 105 115 01	cover		2	M64.03
10	964 105 115 02	cover		2	M64.01/02 M64.50
11	964 105 173 01	gasket		6	
12	900 076 010 02	hexagon nut M 6		34 12	M64.01/02/03 M64.50
12	900 084 004 02	hexagon nut M 8		22	M64.50
13	999 025 193 30	washer 6,4 X 14 X 3		34 12	M64.01/02/03 M64.50
13	900 031 014 30	washer 8,4		22	M64.50
14	964 105 116 01	cover		2	M64.03
14	964 105 116 02	cover		2	M64.01/02
14	964 105 015 20	cover	/R	1	M64.50
14	930 105 116 01	cover	/L	1	M64.50
15	964 105 135 01	gasket		2	M64.01/02/03

Pos	Part Number	Name	Remarks	Qty	Model
15	930 105 195 07	gasket		2	M64.50
16	964 107 118 00	pressure pipe		2	
17	999 701 909 40	o-ring 6,7 X 3,53		4	
18	999 501 071 30	plug 12,5 X 11		1	
19	964 105 345 00	plug		2	
20	999 501 022 30	plug 4,63		2	
21	900 067 350 02	screw M 8 X 55		24	
22	999 218 081 02	screw M 8 X 30		12	
23	000 043 300 86	sealing compound		1	
-	964 105 902 00	set of seals for valve cover		1	M64.01/02/03
-	964 105 902 01	set of seals for valve cover		1	M64.50
		- -- E N D -- -			

Pos	Part Number	Name	Remarks	Qty	Model

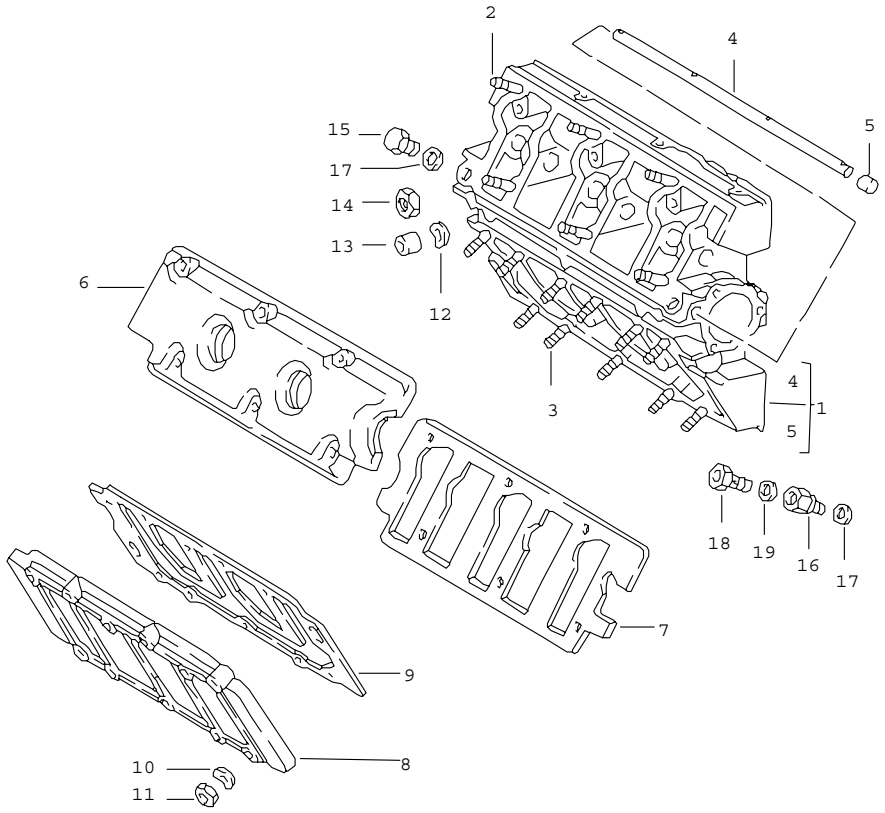

Pos	Part Number	Name	Remarks	Qty	Model
		camshaft housing			M30.69
1	930 105 021 07	camshaft housing		2	
2	999 062 009 02	stud BM 8 X 28		12	
3	999 062 010 02	stud BM 8 X 35		22	
4	930 105 362 00	oil splash tube		2	
5	901 105 379 00	plug		4	
6	901 105 115 03	cover		2	
7	* 930 105 194 04	gasket		2	
8	930 105 116 00	cover	/R	1	
(8)	930 105 116 01	cover	/L	1	
9	* 930 105 195 07	gasket		2	
10	* 900 031 014 30	washer 8,4		40	
11	* 900 084 004 02	hexagon nut M 8		40	
12	N 012 241 8	spring washer B 8 X 15		40	
13	901 111 271 00	nut		6	
14	900 076 025 02	hexagon nut M 8		34	
15	901 105 374 00	screw plug		2	
16	901 105 361 01	intermediate piece		2	
17	* 900 123 005 00	sealing ring A 12 X 16		4	
18	999 134 018 02	banjo bolt A 6		2	
19	900 123 043 30	sealing ring A 12 X 15,5		2	
-	930 105 902 00	set of seals for valve cover		1	
		- -- E N D -- -			

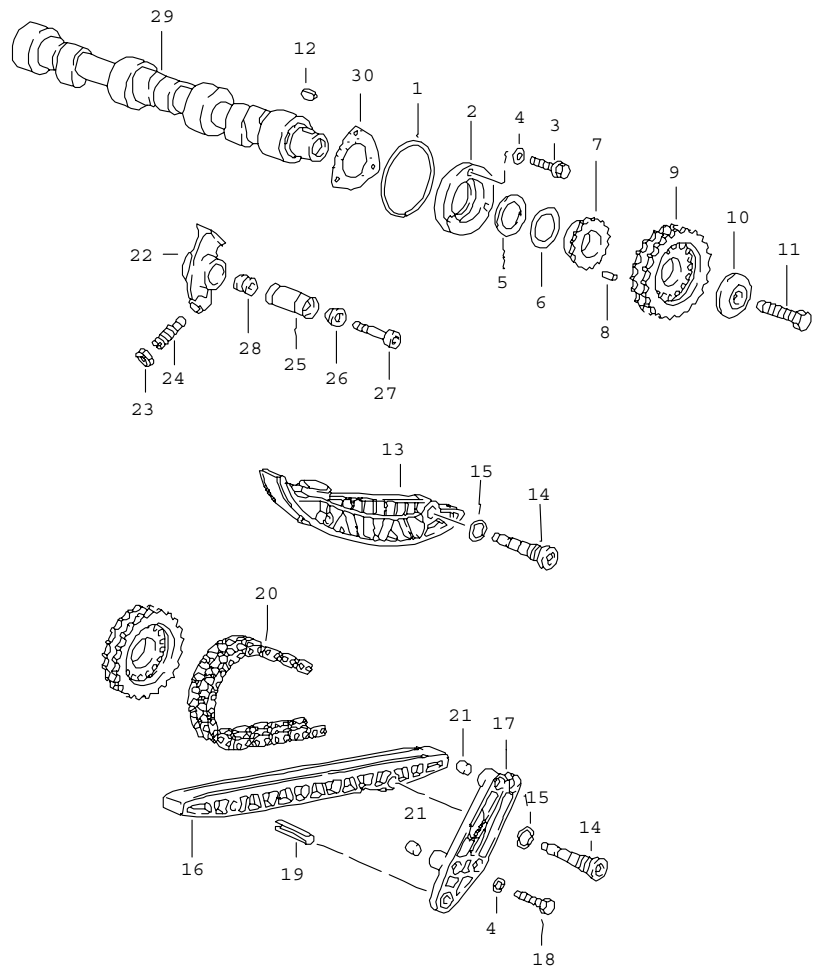

Pos	Part Number	Name	Remarks	Qty	Model
		valve control left			M64.01/02/03 M64.50
1	999 707 313 40	o-ring 67,2 X 5,77		1	
2	930 105 196 00	cover		1	
3	900 075 442 02	screw M 6 X 25		3	
4	N 011 524 7	washer A 6,4		3	
5	901 105 562 00	thrust washer		1	
6	901 105 561 00	shim		X	
7	901 105 583 01	flange		1	
8	900 243 001 00	straight pin 6 H 8 X 14		1	
9	901 105 546 02	sprocket		1	
10	993 105 163 50	washer		1	
11	900 082 072 01	hexagon-head bolt M 12 X 1,5 X 50		1	
12	N 012 708 2	woodruff key 4,0 X 5,0		1	
13	964 105 043 02	tensioner blade		1	
14	964 105 171 02	bolt		1	
15	900 123 131 30	sealing ring A 16 X 20		2	
16	964 105 029 00	guide piece		1	
17	964 105 018 02	supporting bow		1	
18	900 074 151 02	hexagon-head bolt M 6 X 38		2	
19	999 095 045 01	roll pin 10,5 X 43		2	
20	993 105 529 00	timing chain closed		1	
21	999 095 048 00	dowel sleeve 8 X 8		2	
22	930 105 043 00	rocker arm		12	

Pos	Part Number	Name	Remarks	Qty	Model
23	999 034 005 00	hexagon nut M 8 X 1		12	
24	901 105 370 02	adjusting screw		12	
25	901 105 342 04	rocker shaft		12	
26	901 105 344 02	bush		12	
27	999 067 008 00	pan-head screw M 7 X 48		12	
28	901 105 376 02	nut		12	
29	964 105 247 07	camshaft		1	M64.01/02/03
29	964 105 247 21	camshaft		1	M64.50
30	930 105 197 05	gasket		1	
		- -- E N D -- -			

Pos	Part Number	Name	Remarks	Qty	Model

Model	Year	MG	SG	Illustration	Restrictions	Update	11:53	24.11.2005	PORSCHE PET PORSCHE
964	94	1	03	103-12		194			

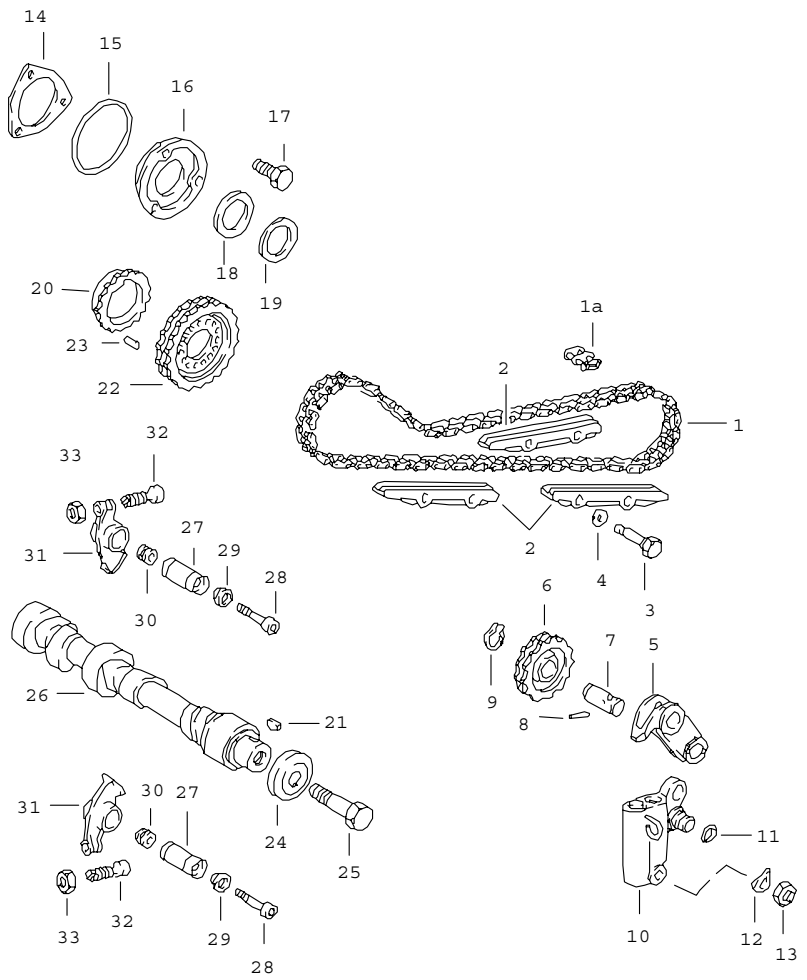

Pos	Part Number	Name	Remarks	Qty	Model
		valve control left			M30.69
1	993 105 529 00	timing chain closed		1	
1	911 105 529 50	timing chain divided		1	
1A	901 105 530 00	connecting link		1	
2	911 105 222 06	guide piece		3	
3	901 105 226 03	bolt		4	
4	* 900 123 066 30	sealing ring A 10 X 16		4	
5	930 105 509 00	chain wheel support		1	
6	901 105 055 00	sprocket		1	
7	901 105 056 01	bolt		1	
8	900 197 010 00	tensioning sleeve 3 X 22		1	
9	N 012 415 1	circlip 15 X 1		1	
10	930 105 058 03	chain adjuster		1	
11	999 701 690 40	round seal 12 X 1,78		1	
12	900 025 007 02	washer A 8,4		1	
13	900 076 025 02	hexagon nut M 8		1	
14	* 930 105 197 05	gasket		1	
15	* 999 701 468 40	round seal 67,5 X 75,4 X 4		1	
16	930 105 196 00	cover		1	
17	900 075 442 02	screw M 6 X 25		3	
18	901 105 562 00	thrust washer		1	
19	901 105 561 00	shim		X	
20	901 105 583 01	flange		1	

Pos	Part Number	Name	Remarks	Qty	Model
21	N 012 708 2	woodruff key 4 X 5		1	
22	901 105 546 02	sprocket II		1	
23	900 243 001 00	straight pin 6 H 8 X 14		1	
24	993 105 163 50	washer		1	
25	900 082 072 01	hexagon-head bolt M 12 X 1,5 X 50		1	
26	930 105 143 03	camshaft		1	
27	901 105 342 04	rocker shaft		12	
28	999 067 008 00	pan-head screw		12	
29	901 105 344 02	bush		12	
30	901 105 376 02	nut		12	
31	930 105 043 00	rocker arm		12	
32	901 105 370 02	adjusting screw		12	
33	999 034 005 00	hexagon nut		12	
		- -- E N D -- -			

Pos	Part Number	Name	Remarks	Qty	Model

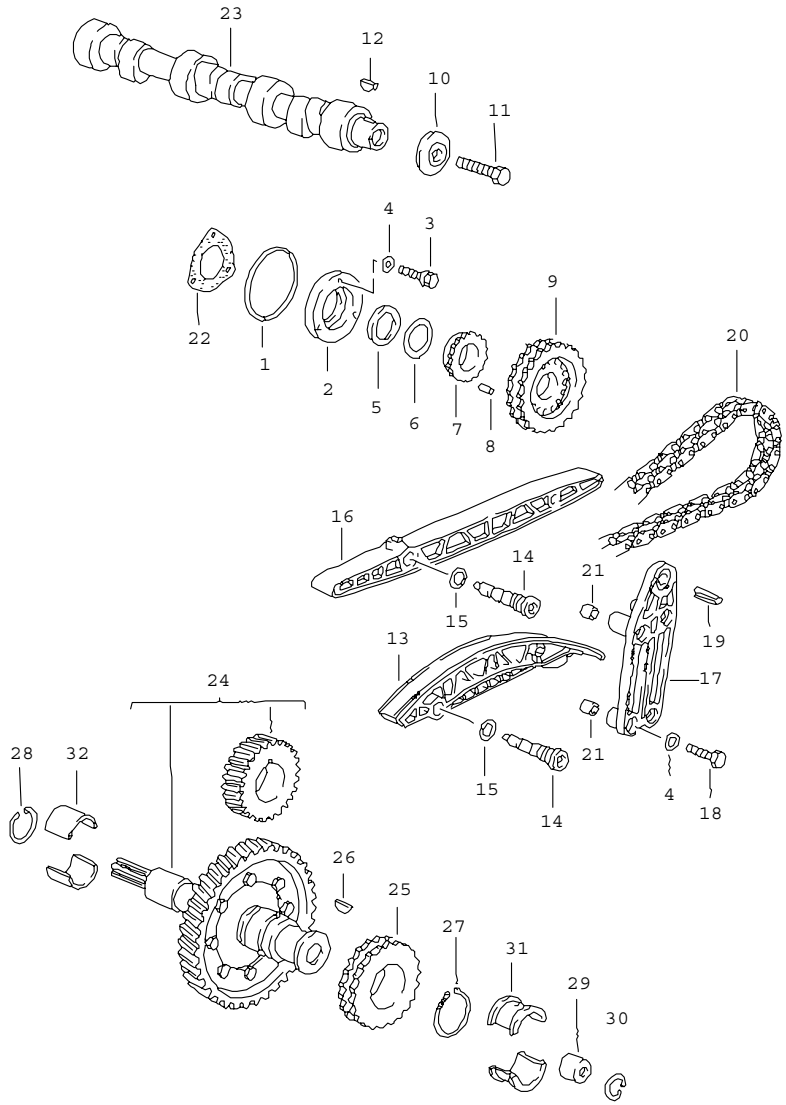

Pos	Part Number	Name	Remarks	Qty	Model
		valve control right			M64.01/02/03 M64.50
1	999 707 313 40	o-ring 67,2 X 5,77		1	
2	930 105 196 00	cover		1	
3	900 075 442 02	screw M 6 X 25		3	
4	N 011 524 7	washer A 6,4		3	
5	901 105 562 00	thrust washer		1	
6	901 105 561 00	shim		X	
7	901 105 583 01	flange		1	
8	900 243 001 00	straight pin 6 H 8 X 14		1	
9	901 105 546 02	sprocket		1	
10	U 993 105 163 50	washer		1	
10	930 105 163 50	washer		1	
11	900 082 072 01	hexagon-head bolt M 12 X 1,5 X 50		1	
12	N 012 708 2	woodruff key 4,0 X 5,0		1	
13	964 105 043 02	tensioner blade		1	
14	964 105 171 02	bolt		1	
15	900 123 131 30	sealing ring A 16 X 20		2	
16	964 105 030 00	guide piece		1	
17	964 105 018 02	supporting bow		1	
18	900 074 151 02	hexagon-head bolt M 6 X 38		2	
19	999 095 045 01	roll pin 10,5 X 43		2	
20	993 105 529 00	timing chain closed		1	
21	999 095 048 00	dowel sleeve 8 X 8		2	

Pos	Part Number	Name	Remarks	Qty	Model
22	930 105 197 05	gasket		1	
23	964 105 246 09	camshaft		1	M64.01/02/03 M657
23	964 105 248 20	camshaft		1	M64.50 M657
23	964 105 248 06	camshaft		1	
24	964 105 911 01	intermediate shaft with timing gear number 0	-89	1	
24	964 105 911 02	intermediate shaft with timing gear number 0	90-	1	
24	964 105 911 11	intermediate shaft with timing gear number 1	-89	1	
24	964 105 911 12	intermediate shaft with timing gear number 1	90-	1	
25	901 105 125 04	sprocket		2	
26	900 118 010 00	woodruff key 6,0 X 7,5		2	
27	900 041 025 01	circlip 36 X 1,75		2	
28	900 041 026 01	circlip 13 X 1		1	
29	901 105 275 00	plug		1	
30	N 012 296 1	circlip 16 X 1		1	
31	916 101 137 00	thrust bearing		2	
32	901 101 135 00	bearing		2	
		- -- E N D -- -			

Model	Year	MG	SG	Illustration	Restrictions	Update			
964	94	1	03	103-17		194	11:53	24.11.2005	PORSCHE PET PORSCHE

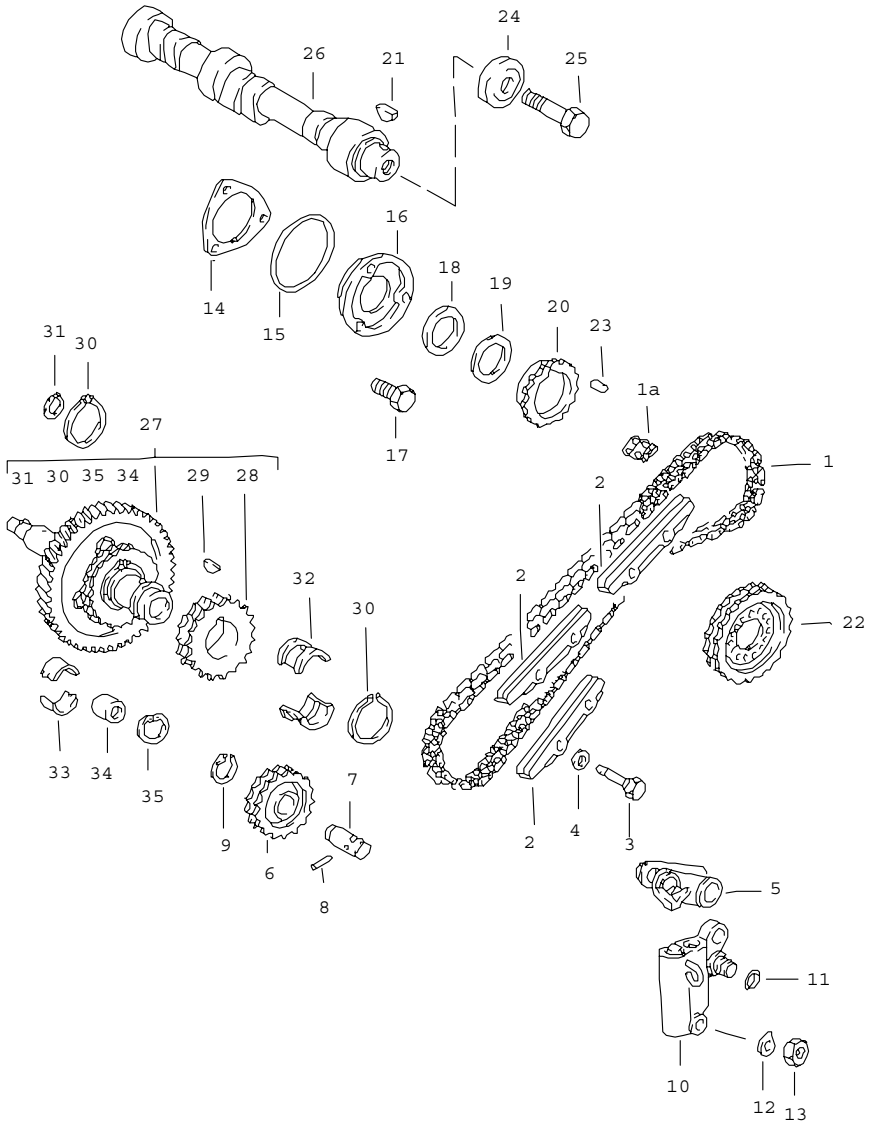

Pos	Part Number	Name	Remarks	Qty	Model
		valve control right			M30.69
1	993 105 529 00	timing chain closed		1	
1	911 105 529 50	timing chain divided		1	
1A	901 105 530 00	connecting link		1	
2	911 105 222 05	guide piece		1	
2	911 105 222 06	guide piece		2	
3	901 105 226 03	bolt		4	
4	* 900 123 066 30	sealing ring A 10 X 16		4	
5	930 105 510 00	chain wheel support		1	
6	901 105 055 00	sprocket		1	
7	901 105 056 01	bolt		1	
8	900 197 010 00	tensioning sleeve 3 X 22		1	
9	N 012 415 1	circlip 15 X 1		1	
10	930 105 058 03	chain adjuster		1	
11	999 701 690 40	round seal 12 X 1,78		1	
12	900 025 007 02	washer A 8,4		1	
13	900 076 025 02	hexagon nut M 8		1	
14	* 930 105 197 05	gasket		1	
15	* 999 701 468 40	round seal 67,5 X 75,4 X 4		1	
16	930 105 196 00	cover		1	
17	900 075 442 02	screw M 6 X 25		3	
18	901 105 562 00	thrust washer		1	
19	901 105 561 00	shim		X	
20	901 105 583 01	flange		1	

Pos	Part Number	Name	Remarks	Qty	Model	Pos	Part Number	Name	Remarks	Qty	Model
21	N 012 708 2	woodruff key 4 X 5		1							
22	901 105 546 02	sprocket II		1							
23	900 243 001 00	straight pin 6 H 8 X 14		1							
24	U 993 105 163 50	washer		1							
24	930 105 163 50	washer		1							
25	900 082 072 01	hexagon-head bolt M 12 X 1,5 X 50		1							
26	930 105 246 00	camshaft		1							
27	> 930 105 013 01	intermediate shaft size 0		1							
27	> 930 105 013 11	intermediate shaft size 1		1							
28	901 105 125 04	sprocket		2							
29	900 118 010 00	woodruff key		2							
30	900 041 025 01	circlip 36 X 1,75		2							
31	900 041 026 01	circlip 13 X 1		1							
32	916 101 137 00	thrust bearing		2							
33	901 101 135 00	bearing		2							
34	901 105 275 00	plug		1							
35	N 012 296 1	circlip 16 X 1		1							
		- -- E N D -- -									

Model	Year	MG	SG	Illustration	Restrictions	Update			
964	94	1	04	104-00		194	11:53	24.11.2005	PORSCHE PET PORSCHE

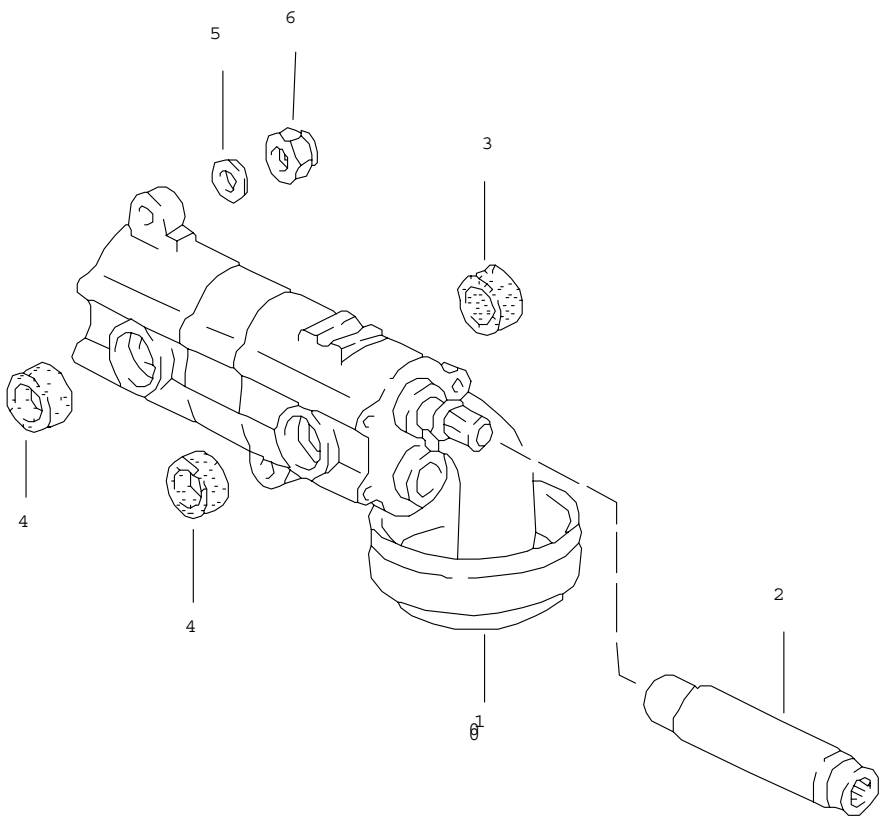

Pos	Part Number	Name	Remarks	Qty	Model
		oil pump			
1	964 107 011 07	oil pump	-90	1	M64.01/02
1	964 107 011 11	oil pump		1	M64.01/02/03 M64.50
(1)	996 107 008 70	oil pump		1	M30.69
2	930 107 143 03	connecting shaft		1	
3	999 704 173 50	sealing ring 19,5 X 26		1	
4	999 704 172 50	sealing ring 16,3 X 22		3	
5	900 031 001 02	washer 8,4		3	
6	999 084 095 02	lock nut M 8		3	
		- -- E N D -- -			

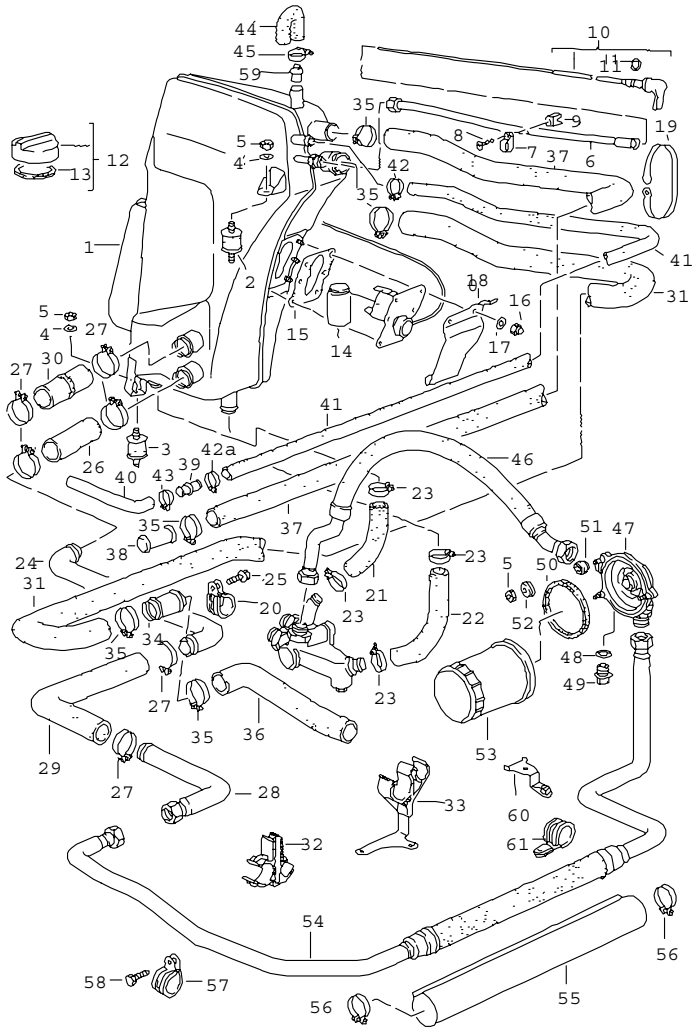

Pos	Part Number	Name	Remarks	Qty	Model
		oil tank lines			
1	A 964 207 070 02	oil tank	-89	1	
1	964 207 070 05	oil tank	90-	1	
1	964 207 070 20	oil tank	93-	1	M64.50
2	999 703 324 00	bonded rubber buffer		1	
3	999 703 324 00	bonded rubber buffer		1	
4	N 011 524 7	washer A 6,4		3	
5	999 084 094 02	lock nut M 6		3	
6	964 207 057 00	guide tube		1	
7	999 511 069 02	clamp 12 X 15		1	
8	900 187 118 02	screw B 4,2 X 16		1	
9	999 507 050 40	expander nut B 4,2		1	
10	964 207 041 00	oil level dipstick		1	
11	900 174 063 40	round seal 6 X 2		1	
12	944 107 091 01	oil filler cover		1	
13	999 701 846 40	o-ring 45 X 4		1	
14	964 641 051 00	tank gauge		1	
15	993 207 226 00	gasket		1	
16	900 085 011 07	cap nut M 5		6	
17	900 025 003 02	washer A 53		6	
18	964 641 561 01	cover plate		1	
19	999 513 010 40	tie-wrap 9 X 250		1	
20	999 511 087 02	clip D-1-28/15		1	

Pos	Part Number	Name	Remarks	Qty	Model
21	A 964 207 241 01	oil hose	-89	1	
21	964 207 241 04	oil hose for thermostat 964 207 047 03/06		1	
(21)	964 207 241 06	oil hose for thermostat 964 207 047 05/07/08		1	
22	964 207 251 02	oil hose for thermostat 964 207 047 03/06		1	
(22)	964 207 251 03	oil hose for thermostat 964 207 047 05/07/08		1	
23	999 512 252 02	hose clamp 23-35		4	
24	964 207 250 14	oil pipe		1	
25	900 075 355 02	screw M 6 X 16 Z 1		1	
26	964 207 217 00	oil hose		1	
27	999 512 356 02	hose clamp 25-40		6	
28	964 207 257 11	oil pipe		1	M64.01/02/03
28	930 207 257 11	oil pipe		1	M30.69 M64.50
29	964 207 247 02	oil hose		1	
30	964 207 130 02	connecting piece		1	
31	964 207 143 00	breather hose		1	
31	964 207 143 01	breather hose	93-	1	SPEEDSTER
32	964 207 331 00	hose holder		1	
33	964 207 032 00	hose holder	-90	1	M64.01/02
(33)	964 207 032 01	hose holder	91-	1	M64.01/02/03
34	964 207 326 01	connection piece		1	
35	999 512 272 02	hose clamp 25-40		6	
36	964 207 327 00	breather hose		1	
37	964 207 145 01	breather hose		1	
38	930 110 267 04	connecting piece		1	
39	964 207 313 00	adapter	-90	1	
40	964 207 314 00	breather hose	-90	1	
41	964 207 315 00	breather hose	-90	1	
41	964 207 316 00	breather hose	91-	1	
42	999 512 346 00	hose clamp 16 - 27/9		1	
42A	999 512 495 02	clamp 18,0 - 20,3	-90	1	
43	999 512 063 02	clip A 19 X 9		2	
44	964 207 177 00	breather hose		1	
45	999 512 554 00	hose clamp 12 - 22		1	
46	A 964 207 254 04	oil pipe		1	M64.01/02/03
46	U 964 207 254 05	oil pipe		1	M64.01/02/03
46	964 207 254 07	oil pipe		1	M64.01/02/03
46	930 207 254 02	oil pipe	-92	1	M30.69
46	930 207 254 04	oil pipe	93-	1	M30.69 M64.50
47	964 207 025 02	bracket		1	M64.01/02/03
(47)	-	bracket see group 1 01 10		1	M30.69 M64.50
48	N 013 813 2	sealing ring A 12 X 17		1	
49	900 124 008 02	screw plug M 12 X 1,5		1	
50	964 207 214 00	sealing ring		1	
51	964 105 140 01	thrust ring		3	
52	900 223 003 02	washer 6,4		3	

Pos	Part Number	Name	Remarks	Qty	Model
53	930 107 764 01	oil filter		1	M64.01/02/03
53	-	oil filter see group 1 01 10		1 1	M30.69 M64.50
54	964 207 252 14	oil pipe		1	M64.01/02/03
(54)	930 207 261 12	oil pipe		1	M30.69 M64.50
55	964 207 352 00	protective tube		1	
56	999 512 346 00	hose clamp 16-25		2	
57	999 511 080 02	clamp B 22 X 15		1	
58	900 378 030 09	hexagon-head bolt M 6 X 20		1	
59	944 107 324 00	valve		1	
60	930 207 228 01	support		1	
61	930 107 407 03	clamp		1	
		- -- E N D -- -			

Pos	Part Number	Name	Remarks	Qty	Model

Model	Year	MG	SG	Illustration	Restrictions	Update			
964	94	1	04	104-02		194	11:54	24.11.2005	PORSCHE PET PORSCHE

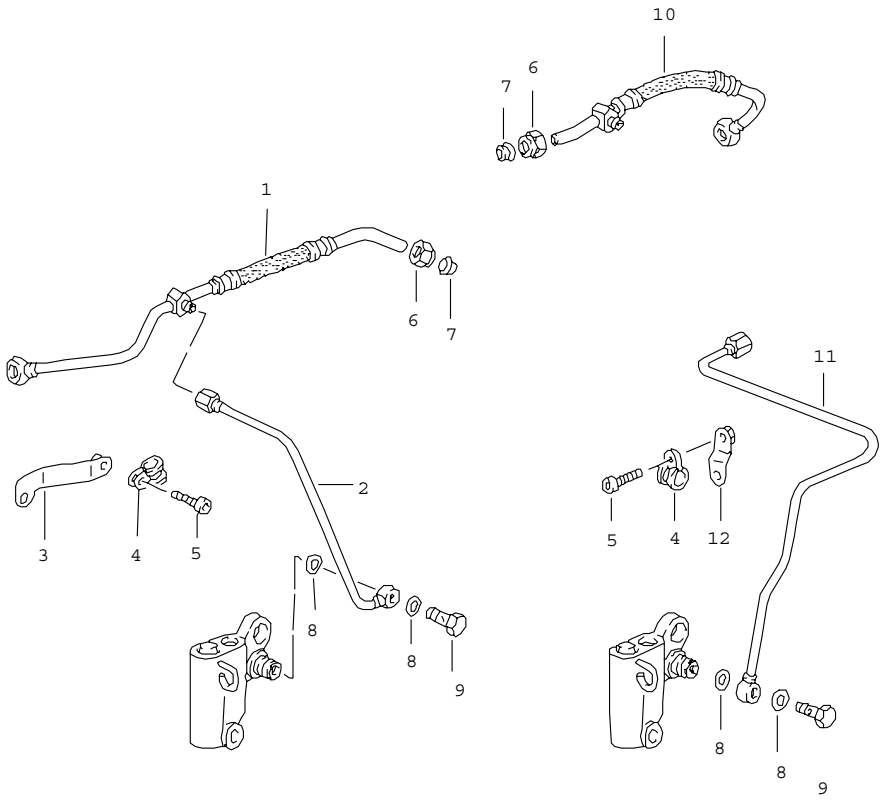

Pos	Part Number	Name	Remarks	Qty	Model
		oil supply chain adjuster			M30.69
1	930 107 347 05	oil hose		1	
2	930 107 347 06	oil pipe		1	
3	930 107 341 00	support		1	
4	999 511 174 02	clip 4/9		2	
5	900 119 059 02	pan-head screw M 4 X 10		2	
6	900 104 003 02	union nut ALL 8		2	
7	N 020 825 1	cutting ring LL 8		2	
8	900 123 115 30	sealing ring A 8 X 11,5		4	
9	N 021 073 1	banjo bolt LL 3-5		2	
10	930 107 348 10	oil hose		1	
11	930 107 348 09	oil pipe		1	
12	930 107 342 01	support		1	
		- -- E N D -- -			

Model	Year	MG	SG	Illustration	Restrictions	Update			
964	94	1	04	104-03		194	11:54	24.11.2005	PORSCHE PET PORSCHE

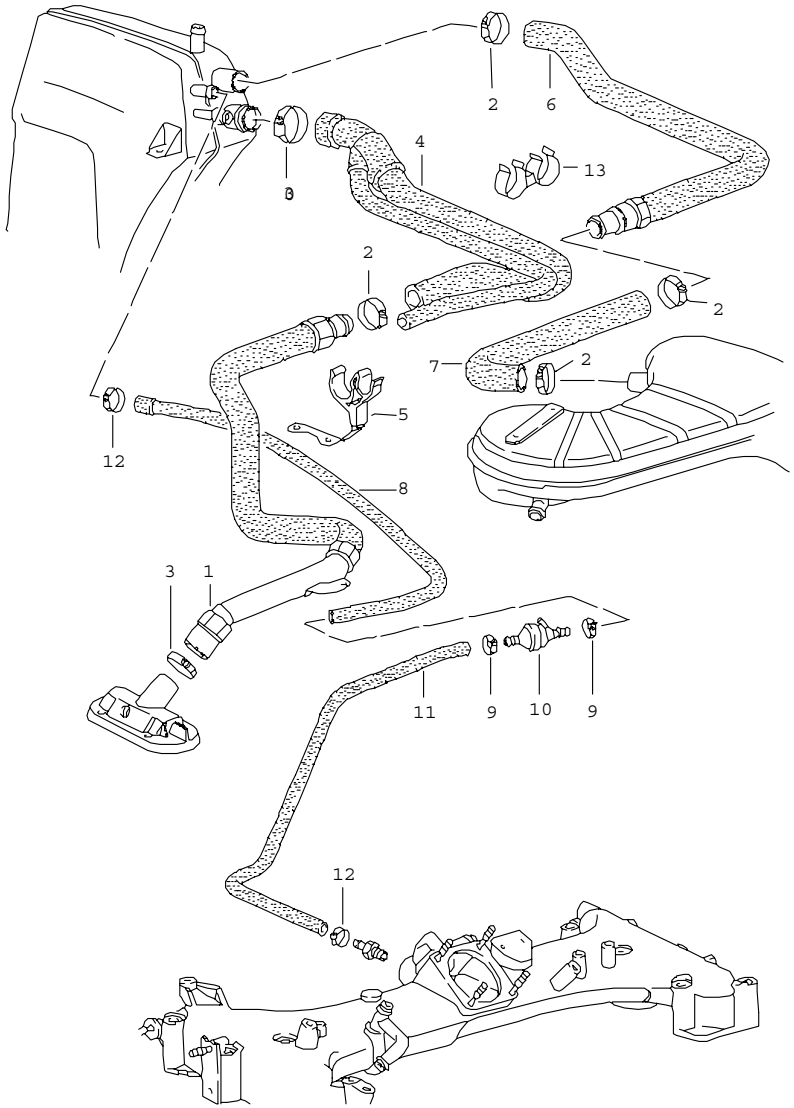

Pos	Part Number	Name	Remarks	Qty	Model
		crankcase bleeding			M30.69 M64.50
1	930 107 397 03	line		1	
2	999 512 252 02	hose clamp 23 - 35		4	
3	999 512 551 00	hose clamp 25 - 40		2	
4	930 207 043 01	hose		1	
5	964 207 032 02	hose holder		1	
6	930 207 145 02	hose		1	
7	930 207 145 03	hose		1	
8	930 207 314 00	hose		1	
9	999 512 427 02	hose clamp 8 - 16		2	
10	999 926 021 00	valve		1	
11	930 207 316 00	hose		1	
12	999 512 554 00	hose clamp 12 - 22		2	
13	999 591 616 40	hose holder		1	
		- -- E N D -- -			

Model	Year	MG	SG	Illustration	Restrictions	Update	11:54	24.11.2005	PORSCHE PET PORSCHE
964	94	1	04	104-05		194			

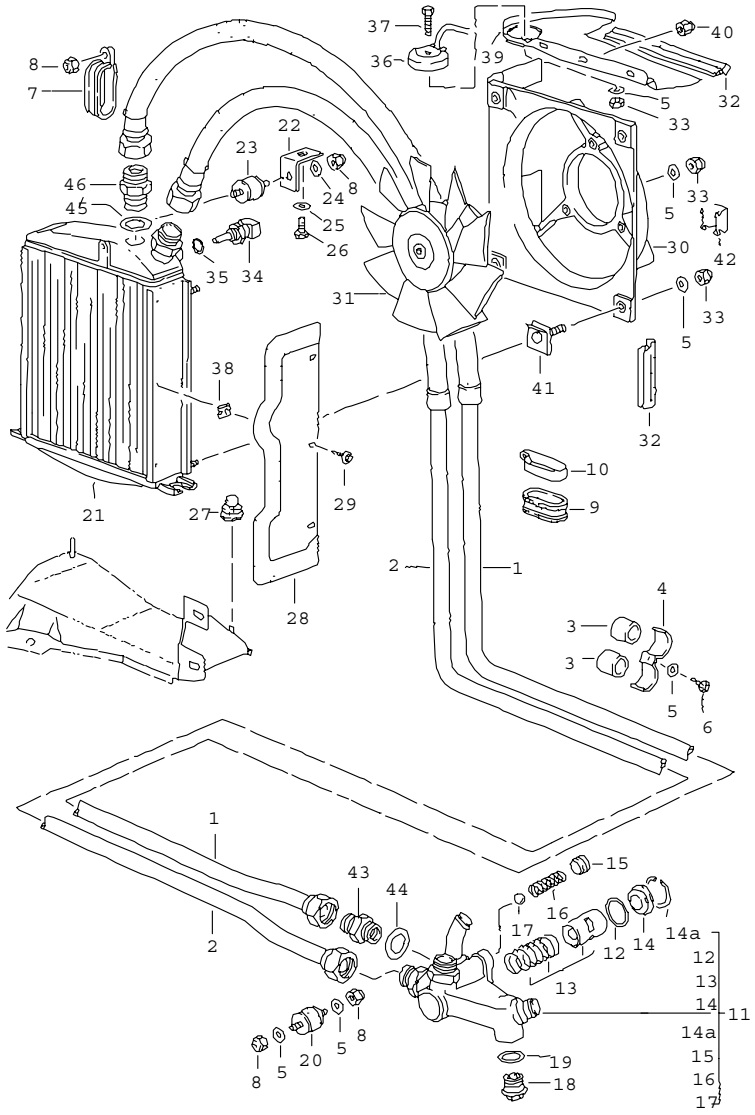

Pos	Part Number	Name	Remarks	Qty	Model
		oil cooler lines			
1	A 964 207 135 01	oil pipe		1	
1	964 207 135 03	oil pipe		1	
2	A 964 207 133 01	oil pipe		1	
2	964 207 133 03	oil pipe		1	
3	964 207 302 00	hose piece		4	
4	964 207 303 00	support		2	
5	N 011 524 7	washer A 6,4		16	
6	900 187 015 02	tapping screw B 6,3 X 16		2	
7	964 207 121 00	hose clamp		2	
8	999 084 094 02	lock nut M 6		6	
9	930 207 265 00	rubber mounting		1	
10	999 511 162 02	clip 29 X 15		1	
11	A 964 207 047 03	thermostat	-90	1	
11	A 964 207 047 05	thermostat	91	1	
11	A 964 207 047 06	thermostat	91-	1	
11	964 207 047 07	thermostat	-92	1	
11	964 207 047 08	thermostat	93-	1	
12	999 701 393 40	o-ring 32 X 2,5		1	
13	964 207 349 02	thermostat insert		1	
14	964 207 351 01	washer		1	
14A	999 041 036 00	circlip 37 X 1,5		1	
15	900 063 007 02	screw plug M 20 X 1,5		1	
16	964 207 355 00	compression spring		1	
17	900 108 060 00	ball 13 MM-KL3		1	

Pos	Part Number	Name	Remarks	Qty	Model
18	944 107 197 01	screw plug		1	
19	900 123 118 30	sealing ring A 22 X 27		1	
20	999 703 246 00	bonded rubber buffer 20 X 20		1	
21	964 207 220 02	oil cooler		1	
22	964 207 415 00	bracket		1	
23	999 703 323 00	bonded rubber buffer 25 X 20		1	
24	900 151 003 02	washer A 6,4		1	
25	900 151 008 02	washer B 8,4		1	
26	900 075 087 02	hexagon-head bolt M 8 X 16		1	
27	964 207 413 01	buffer		2	
28	964 207 223 01	air baffle		1	
29	900 187 132 02	screw B 3,5 X 13		3	
30	964 624 041 00	air-guide cowl		1	
31	964 624 035 00	blower		1	
32	999 911 398 40	protective edging 557 MM it is necessary to rework		X	
33	900 076 010 02	hexagon nut M 6		8	
34	964 624 110 00	temperature sensor		1	
35	900 123 007 30	sealing ring A 14 X 18		1	
36	964 616 521 01	ballast resistor		1	
37	N 010 217 9	hexagon-head bolt M 6 X 20		1	
38	999 591 713 02	speed nut B 4,2		3	
39	964 575 522 00	air duct		1	M 481
39	964 575 522 01	air duct		1	M 249
40	999 591 839 40	hexagon nut T5		3	
41	999 591 911 02	bolt M 6 X 20		4	
42	999 591 895 02	retaining clip		3	
43	900 915 008 09	union A LL 22		3	
44	900 123 139 30	sealing ring A 26 X 32		3	
45	900 123 118 30	sealing ring A 22 X 27		2	
46	999 136 045 09	union		2	
		- -- E N D -- -			

Model	Year	MG	SG	Illustration	Restrictions	Update			
964	94	1	05	105-00		194	11:54	24.11.2005	PORSCHE PET PORSCHE

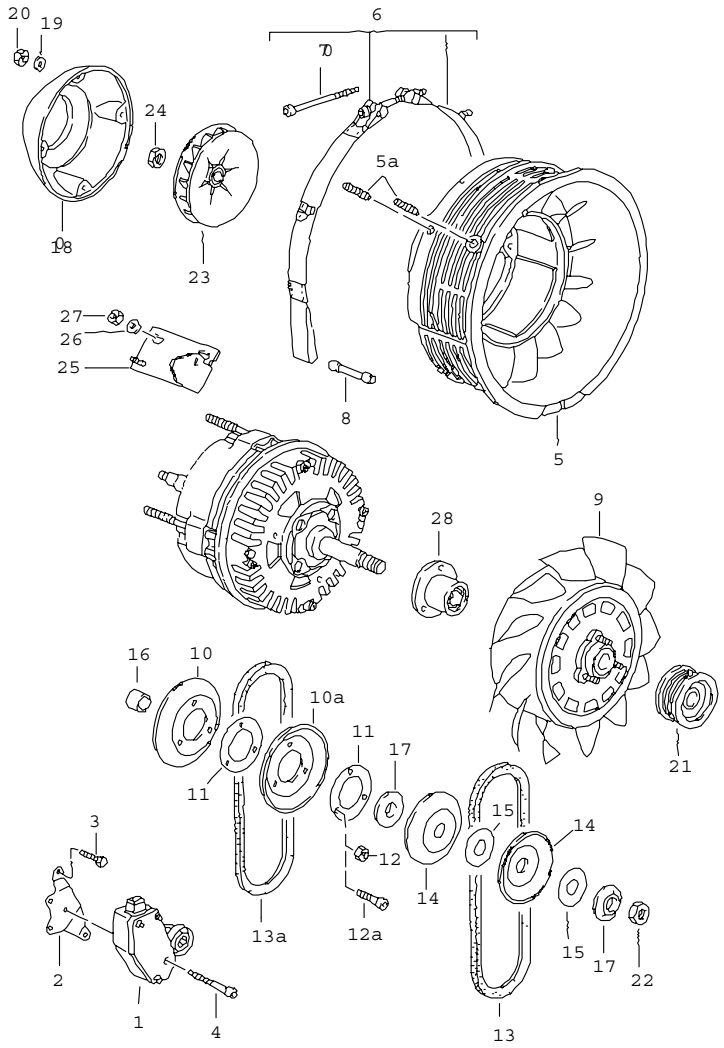

Pos	Part Number	Name	Remarks	Qty	Model
		air cooling			
1	A 964 106 035 02	sender	-89	1	M64.01/02
1	964 106 035 03	sender	-91	1	M64.01/02
1	993 106 035 00	sender	92-	1	M64.01/02
1	964 106 035 08	sender		1	M30.69 M64.50
2	964 106 315 00	support		1	M64.01/02
2	964 106 315 20	support		1	M30.69 M64.50
3	999 143 004 08	locking screw M 6 X 12		2	M64.01/02 M64.50
3	N 010 210 13	hexagon-head bolt M 6 X 10		2	M30.69
4	N 014 743 2	pan-head screw M 6 X 30		1	
5	964 106 667 02	fan housing		1	M64.01/02/03
5	930 106 006 08	fan housing		1	M30.69 M64.50
5A	999 062 073 02	stud BM 8 X 16		2	M30.69 M64.50
6	964 106 017 01	restraining strap		1	M64.01/02/03
(6)	964 106 251 20	clip		1	M30.69 M64.50
7	900 067 290 02	pan-head screw M 6 X 70 X 36		1	M64.01/02/03
7	900 067 152 02	pan-head screw M 8 X 55		1	M30.69 M64.50
8	964 106 273 00	pin		2	M64.01/02/03
9	964 106 015 02	impeller	-92	1	M64.01
9	964 106 015 31	impeller		1	M64.01/02
9	964 106 015 75	impeller	-92	1	M64.03
9	964 106 015 40	impeller	93-	1	M64.03
9	930 106 015 00	impeller		1	M30.69
9	964 106 015 21	impeller		1	M64.50

Pos	Part Number	Name	Remarks	Qty	Model
10	964 106 511 02	pulley half		2	M64.01/02/03
10	930 106 509 00	pulley half		1	M30.69 M64.50
10A	930 106 510 00	pulley half		1 1	M30.69 M64.50
11	964 106 517 01	shim		6	M64.01/02/03 M30.69 M64.50
12	999 084 094 02	lock nut M 6		3	M64.01/03
12A	900 119 026 02	pan-head screw M 6 X 30		3	M64.02 M30.69 M64.50
13	999 192 338 50	narrow v-belt 9,5 X 776		1	M64.01
13	999 192 343 50	narrow v-belt 9,5 X 760		1	M64.02
13A	999 192 338 50	narrow v-belt 9,5 X 776		1	M64.01/02/03
13A	999 192 345 50	narrow v-belt 9,5 X 785		1	M30.69 M64.50
14	964 106 267 00	pulley half		2	M64.01
14	964 106 267 31	pulley half		2	M64.02
15	964 106 268 00	shim		6	M64.01
15	964 106 268 30	shim	-91	6	M64.02
15	964 106 268 31	shim	92-	6	M64.02
16	964 106 515 00	spacer sleeve	-91	1	
16	964 106 515 30	spacer sleeve	92-	1	
17	964 106 211 00	sleeve	-91	2	M64.01
17	964 106 211 01	sleeve	92-	2	M64.01
17	964 106 211 30	sleeve	-91	2	M64.02
17	964 106 211 32	sleeve	92-	2	M64.02
17	N 011 542 2	washer A 17		1	M30.69 M64.50
18	930 603 041 01	hub extension		1	
19	N 011 524 7	washer A 6,4		4	
20	900 910 010 09	lock nut V M 6		4	
21	930 106 124 02	pulley		1	M30.69 M64.50
22	900 034 013 02	hexagon nut B M 16 X 1,5		1	
23	928 603 045 01	impeller		1	
24	900 034 003 02	hexagon nut BM 10		1	
25	930 110 224 02	mounting plate		1	M30.69 M64.50
26	900 025 007 02	washer		2	M30.69 M64.50
27	900 076 025 02	hexagon nut M 8		2	M30.69 M64.50
28	964 106 051 30	wheel hub		1	M30.69 M64.01/02/50
(28)	993 106 051 80	wheel hub		1	M64.03
		- -- E N D -- -			

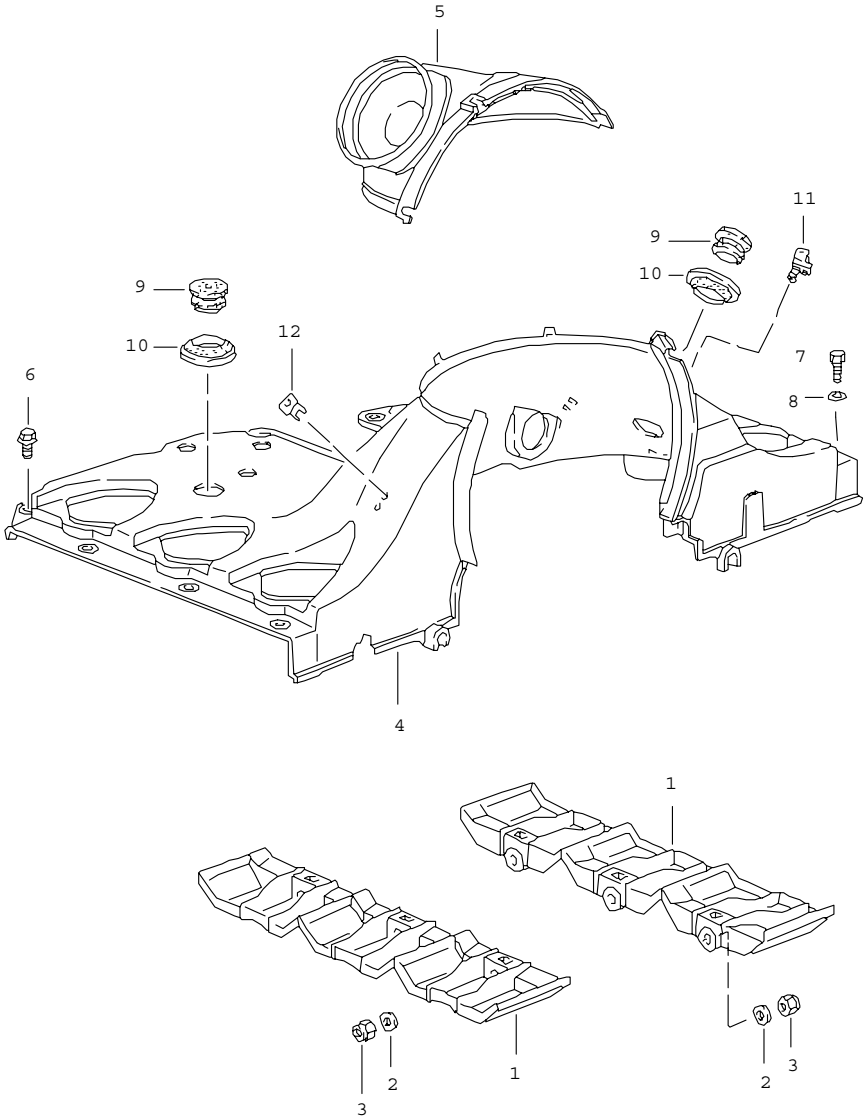

Pos	Part Number	Name	Remarks	Qty	Model
		air duct			M64.01/02/03
1	964 106 266 01	air duct		2	
2	999 025 193 30	washer 6,4 X 14 X 3		6	
3	999 084 094 02	lock nut M 6		6	
4	964 106 402 06	air duct		1	
5	964 106 403 02	air duct		1	
6	999 143 006 08	screw M 6 X 16		14	
7	900 075 014 02	hexagon-head bolt M 6 X 18		2	
8	930 126 135 01	washer 6,1		2	
9	911 612 328 00	rubber sleeve		2	
10	911 612 327 00	rubber sleeve		2	
11	911 602 551 00	cable holder		2	
12	999 591 592 40	special nut		6	
		- -- E N D -- -			

Model	Year	MG	SG	Illustration	Restrictions	Update				
964	94	1	05	105-07		194	11:55	24.11.2005	PORSCHE	PET	PORSCHE

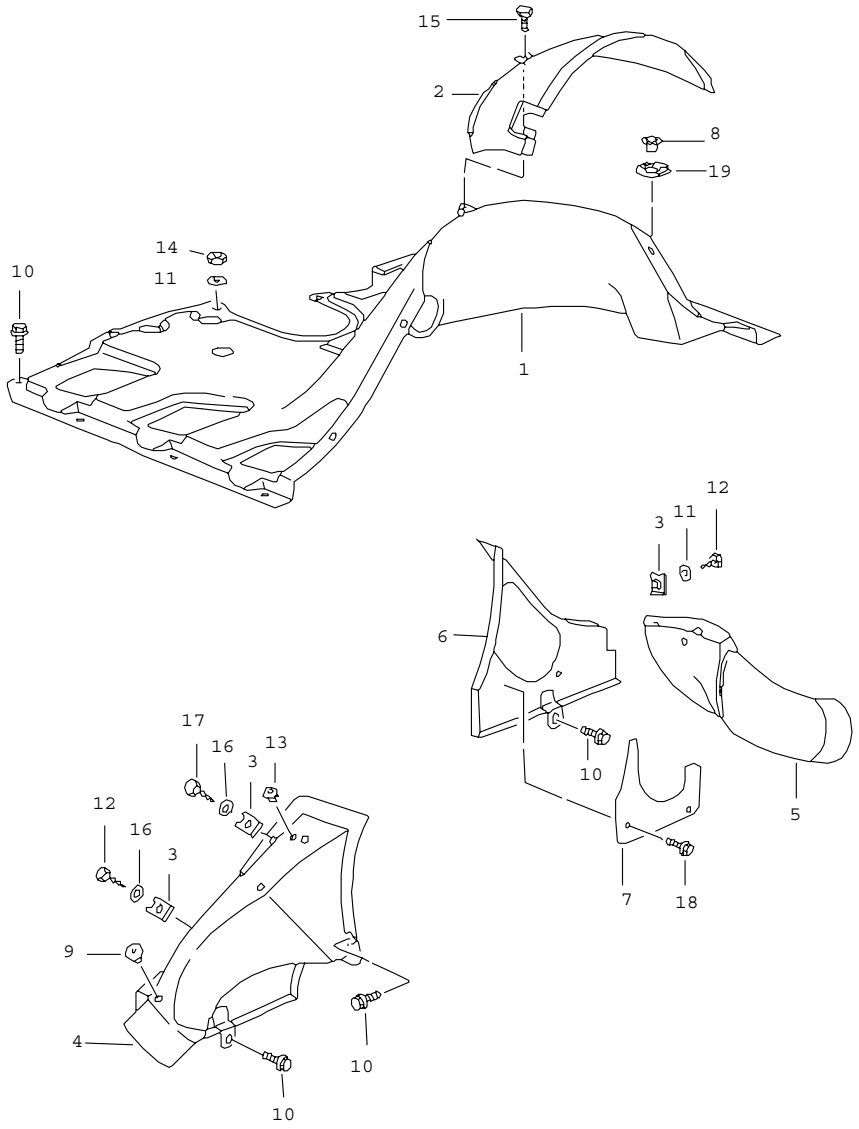

Pos	Part Number	Name	Remarks	Qty	Model
		air duct			M30.69 M64.50
1	930 106 402 02	air duct black		1	
2	930 106 403 00	air duct black		1	
3	999 507 003 02	speed nut B 6,3		4	
4	930 106 021 50	hot air socket		1	M30.69
4	964 106 021 20	hot air socket		1	M64.50
5	911 106 327 00	hot air socket		1	
6	911 106 036 00	cover plate		1	M30.69
6	964 106 036 20	cover plate		1	M64.50
7	911 106 827 00	closing plate		1	
8	911 106 310 00	sleeve		1	
9	999 703 044 50	plug		2	
10	999 143 004 08	locking screw M 6 X 12		10	
11	N 011 524 7	washer A 6,4		4	
12	900 187 015 02	tapping screw B 6,3 X 16		2	
13	999 591 592 40	special nut		4	
14	900 076 010 02	hexagon nut M 6		2	
15	999 919 037 02	hexagon-head bolt 4,0 X 12		1	
16	999 025 108 02	washer 6,4 X 14 X 1,6		2	
17	900 187 010 02	tapping screw B 6,3 X 19		1	
18	999 075 039 02	screw M 6 X 12		3	
19	999 591 315 02	clip 10,0		1	
		- -- E N D -- -			

Model	Year	MG	SG	Illustration	Restrictions	Update	11:55	24.11.2005	PORSCHE	PET	PORSCHE
964	94	1	05	105-10		194					

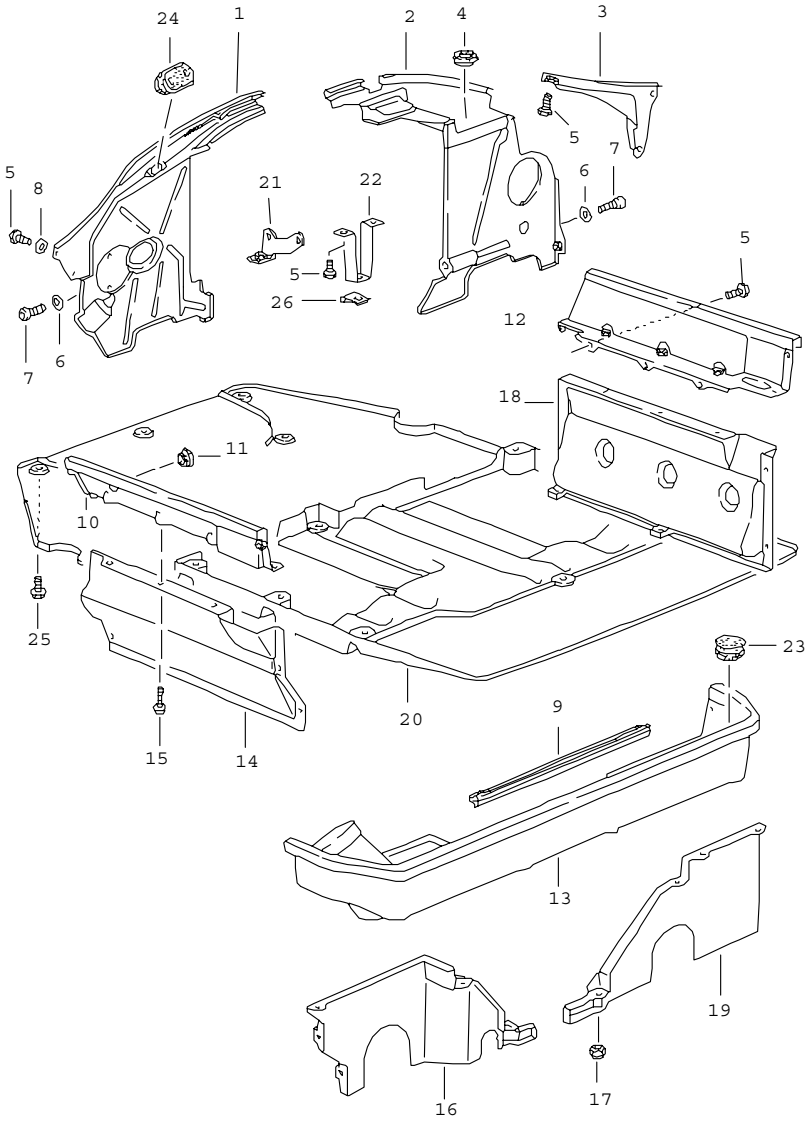

Pos	Part Number	Name	Remarks	Qty	Model
		engine cover engine capsule			M64.01/02/03
1	964 106 283 08	engine cover	/L	1	
(2) A	964 106 283 01	engine cover	/R	1	M 656
(2)	964 106 283 76	engine cover	/R	1	M 656
2	964 106 283 09	engine cover	/R	1	M 657
3	964 106 283 10	engine cover	/R	1	M 657
4	999 702 126 50	grommet 17,5 X 32 X 7		1	
5	999 143 004 08	locking screw M 6 X 12		8	
6	900 025 007 02	washer 8,4		2	
7	N 014 706 7	pan-head screw M 8 X 12		2	
8	N 011 524 7	washer A 6,4		2	
9	964 106 223 01	engine compartment seal		2	
10	964 106 229 03	engine cover	/L	1	
11	999 703 224 40	cap 20 X 25 X 6		1	M 150
12	964 106 289 01	engine cover	/R	1	
13	964 106 014 02	engine cover	/H	1	
14	964 119 015 03	engine capsule	/L	1	
15	900 075 354 00	screw M 6 X 16		23	
16	964 119 013 03	engine capsule	/L	1	
17	999 084 114 02	lock nut M 6		6	
18	964 119 014 03	engine capsule	/R	1	
19	964 119 012 03	engine capsule	/R	1	
20	964 119 029 04	engine capsule		1	M64.01/03
(20)	964 119 029 31	engine capsule		1	M64.02
21	964 119 106 01	support	/R	1	M64.01/03

Pos	Part Number	Name	Remarks	Qty	Model
21	964 119 106 30	support	/R	1	M64.02
22	964 119 107 30	support	/L	1	M64.02
23	964 106 237 01	plug		2	
24	911 606 407 00	grommet		1	
25	900 075 422 00	screw M 6 X 20		6	
26	A 999 507 359 00	nut lock M 6		1	
26	999 507 073 00	nut lock M 6		1	
		- -- E N D -- -			

Pos	Part Number	Name	Remarks	Qty	Model

Model	Year	MG	SG	Illustration	Restrictions	Update			
964	94	1	05	105-12		194	11:55	24.11.2005	PORSCHE PET PORSCHE

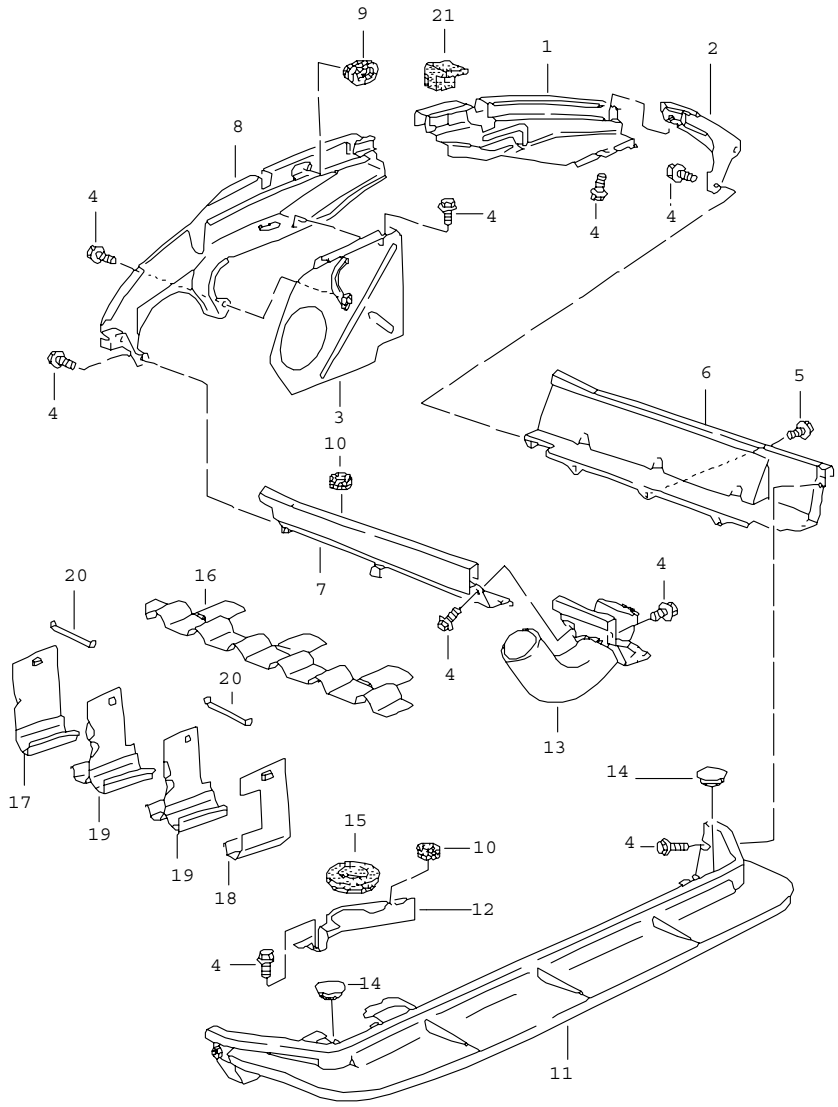

Pos	Part Number	Name	Remarks	Qty	Model
		engine cover air duct			M30.69 M64.50
1	930 106 283 09	engine cover	/R	1	
2	930 106 283 10	engine cover	/R	1	
3	930 106 707 05	engine cover	/L	1	
4	999 075 039 02	screw M 6 X 12		23	
5	999 143 004 08	locking screw M 6 X 12		10	
6	930 106 289 08	engine cover	/R	1	M30.69
6	964 106 289 20	engine cover	/R	1	M64.50
(6)	930 106 289 09	engine cover	/R	1	M30.69(J)
(6)	964 106 289 21	engine cover	/R	1	M64.50(J)
7	930 106 703 09	engine cover	/L	1	
8	930 106 283 11	engine cover	/L	1	
9	930 106 407 01	grommet		1	
10	930 106 175 00	rubber sleeve 21,5$		3	
11	930 106 214 08	engine cover		1	M30.69
11	964 106 214 20	engine cover		1	M64.50
12	930 106 852 02	engine cover		1	M30.69
12	964 106 852 20	engine cover		1	M64.50
13	930 211 045 01	heating tube	/L	1	M30.69
(13)	964 106 853 20	cover	/L	1	M64.50
14	964 106 237 01	plug		2	
15	930 106 176 00	rubber sleeve 34$		1	
16	930 106 301 00	cover plate		1	M30.69
16	964 106 266 20	cover plate		1	M64.50
17	930 106 221 00	baffle plate		2	
18	930 106 222 00	baffle plate		2	
19	930 106 023 00	baffle plate		4	

Pos	Part Number	Name	Remarks	Qty	Model	Pos	Part Number	Name	Remarks	Qty	Model
20	930 106 228 00	leaf spring		6							
21	930 110 612 00	rubber sleeve		1							
		- -- E N D -- -									

Model	Year	MG	SG	Illustration	Restrictions	Update				
964	94	1	06	106-00		194	11:56	24.11.2005	PORSCHE	PET	PORSCHE

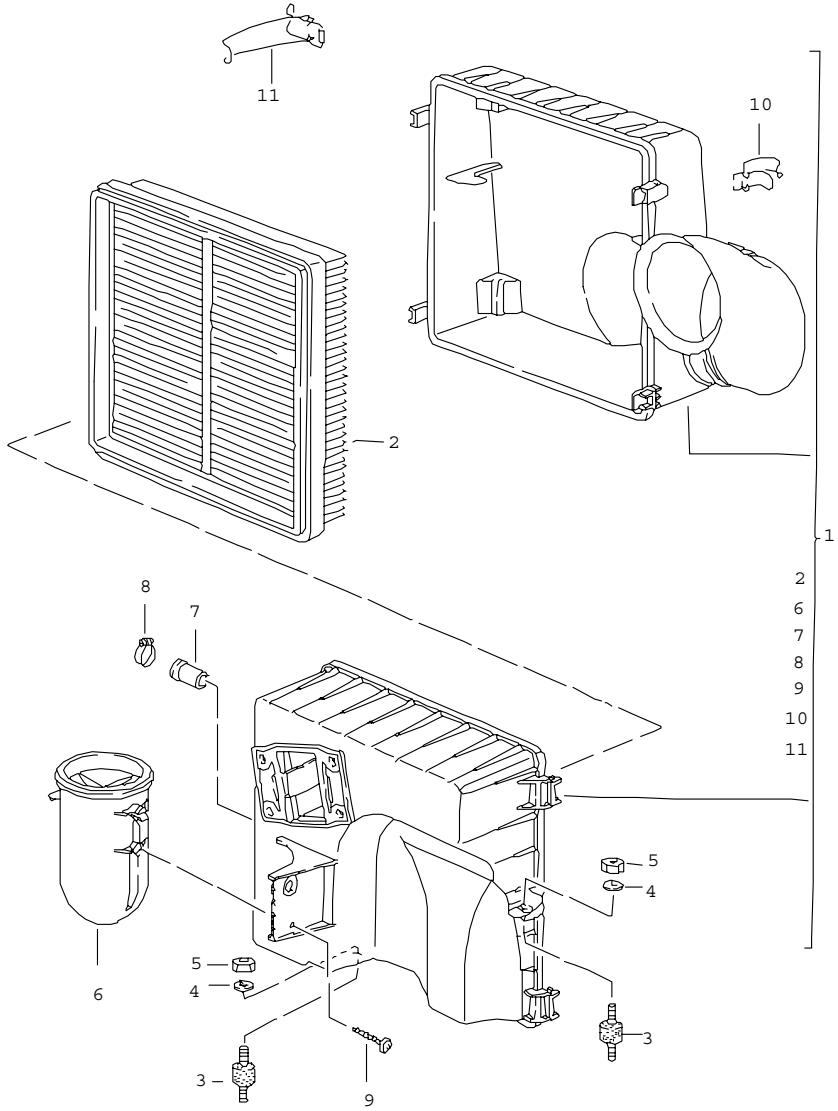

Pos	Part Number	Name	Remarks	Qty	Model
		air cleaner			M64.01/02/03
1	964 110 030 05	air cleaner		1	
2	964 110 327 01	air cleaner cartridge		1	
3	930 110 579 01	bonded rubber buffer		2	
4	N 011 666 7	washer B6,4		2	
5	999 084 094 02	lock nut M6		2	
6	964 110 140 00	vacuum reservoir		1	
7	930 110 256 00	plug		1	
8	999 512 554 00	hose clamp A 9 X 18		1	
9	999 919 064 02	oval-head screw M 5 X 20		1	
10	964 110 902 00	clamp		2	
11	964 110 902 01	clamp		2	
		- -- E N D -- -			

Model	Year	MG	SG	Illustration	Restrictions	Update	11:56	24.11.2005	PORSCHE PET PORSCHE
964	94	1	06	106-05		194			

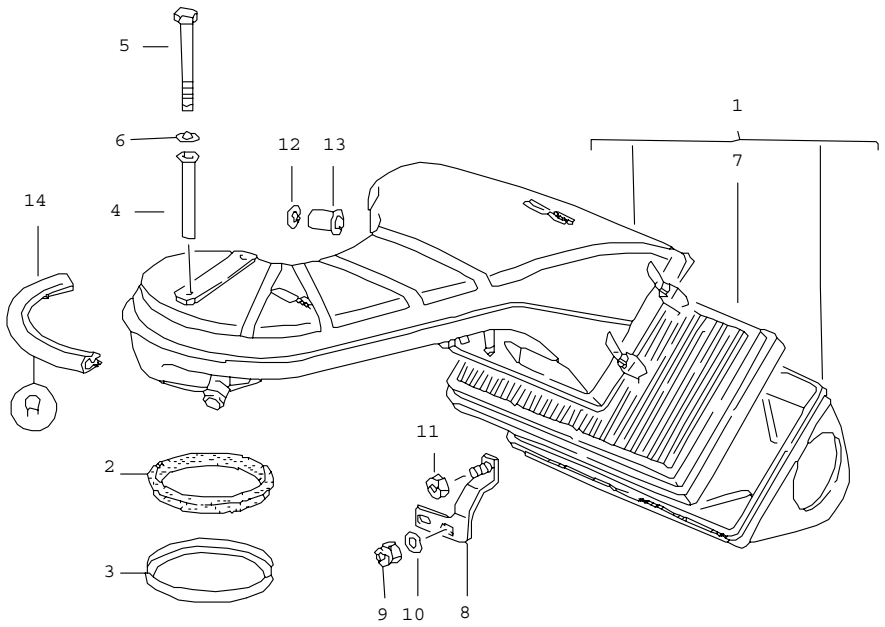

Pos	Part Number	Name	Remarks	Qty	Model
		air cleaner			M30.69 M64.50
1	930 110 020 07	air cleaner		1	
2	* 930 110 122 00	sealing ring		1	
3	930 110 121 02	support ring		1	
4	930 110 436 01	spacer sleeve		2	
5	900 074 023 02	hexagon-head bolt M 6 X 75		2	
6	N 011 524 7	washer 6,4		2	
7	930 110 185 02	air cleaner cartridge		1	
8	930 110 331 05	support		1	
9	999 084 423 02	lock nut		1	
10	900 025 007 02	washer 8,4		2	
11	900 076 025 02	hexagon nut M 8		2	
12	999 591 369 02	locking washer		1	
13	911 106 415 01	pipe with strainer		1	
-	000 043 205 08	protective edging		X	
14	-	282 MM		1	
		- -- E N D -- -			

Model	Year	MG	SG	Illustration	Restrictions	Update	11:56	24.11.2005	PORSCHE PET PORSCHE
964	94	1	07	107-00		194			

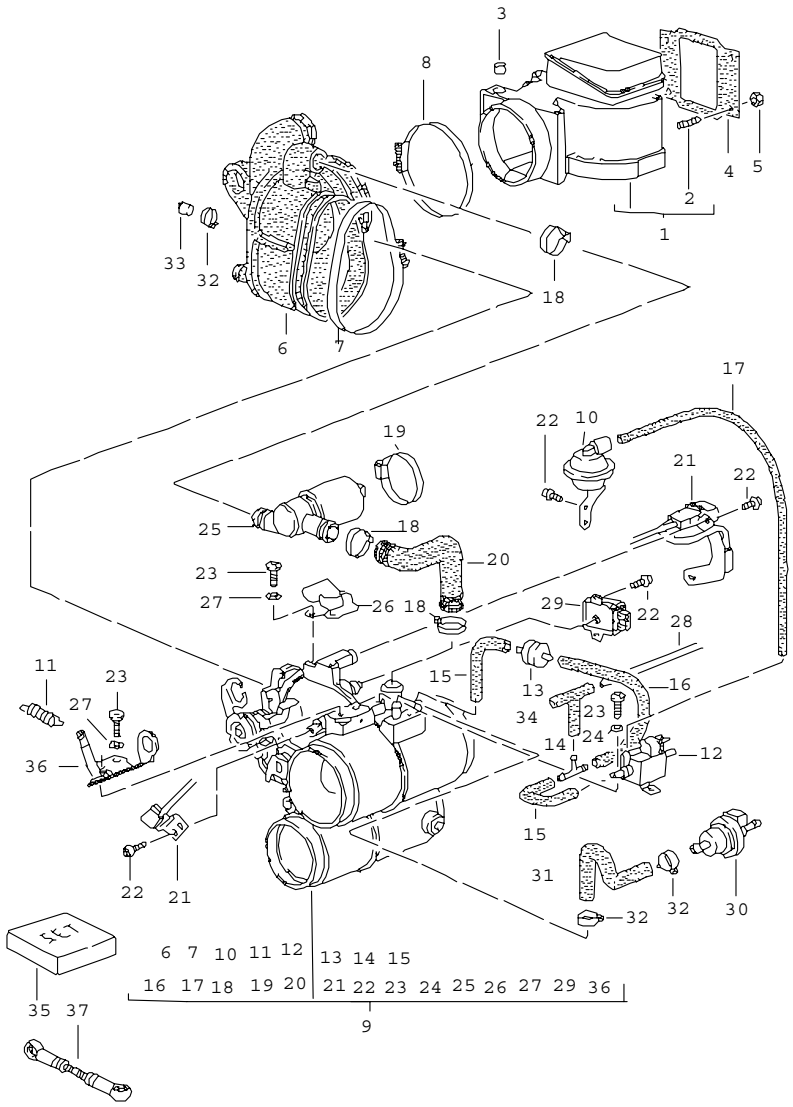

Pos	Part Number	Name	Remarks	Qty	Model
		l-jetronic throttle housing suction housing magnesium			M64.01/02
1	964 606 050 00	mass air flow		1	
2	999 062 003 02	stud BM 6 X 18		4	
3	999 703 389 40	plug		1	
3	928 606 221 00	plug		1	M 277
4	928 110 201 01	sealing frame		1	
5	900 910 011 02	lock nut M 6		4	
6	964 110 366 00	air box		1	
7	999 512 425 02	hose clamp 110 X 12		1	
8	999 512 350 02	hose clamp 80-100		1	
9	964 110 901 00	throttle body		1	M64.01
9	964 110 901 30	throttle body		1	M64.02
10	964 110 940 00	vacuum unit		1	
11	964 110 930 00	return spring		1	
12	911 618 123 01	vacuum valve		1	
13	964 110 950 01	check valve		1	
14	964 110 951 00	t-socket		1	
15	964 110 952 00	hose		2	
16	964 110 953 00	hose		1	
17	964 110 954 00	hose		1	
18	999 512 380 02	clamp 26,0 - 30,1		3	
19	999 512 499 00	hose clamp 45 X 9		1	
20	964 110 641 00	hose	-90	1	
21	911 606 019 00	microswitch		1	M64.01
21	911 606 019 01	microswitch		1	M64.02

Pos	Part Number	Name	Remarks	Qty	Model
22	900 146 125 02	screw M 4 X 10		8	
23	N 014 139 11	oval-head screw M 6 X 12		6	
24	N 011 524 7	washer A 6,4		2	
25	964 606 160 00	idle-speed adjuster		1	
26	964 110 941 00	support		1	
27	999 523 118 02	lock washer 6,4 X 10 X 0,7		4	
-	N 020 139 11	pipe 4,0 X 1,0		X	
28	-	330MM		1	
29	964 606 115 00	throttle-valve switch		1	M64.02
30	944 605 240 01	bleeder valve		1	
31	964 110 544 02	hose		1	
32	900 272 002 02	hose clamp AL 10 - 16		3	
33	999 501 024 30	plug 11,2		1	M 592
34	928 573 727 03	distributing piece		1	
35	U 964 110 970 00	parts kit		1	M 454
35	964 110 970 50	parts kit		1	M 454
36	964 110 219 51	support		1	
37	964 110 647 01	pull rod		1	M 454
		- -- E N D -- -			

Pos	Part Number	Name	Remarks	Qty	Model

Model	Year	MG	SG	Illustration	Restrictions	Update			
964	94	1	07	107-02		194	11:56	24.11.2005	PORSCHE PET PORSCHE

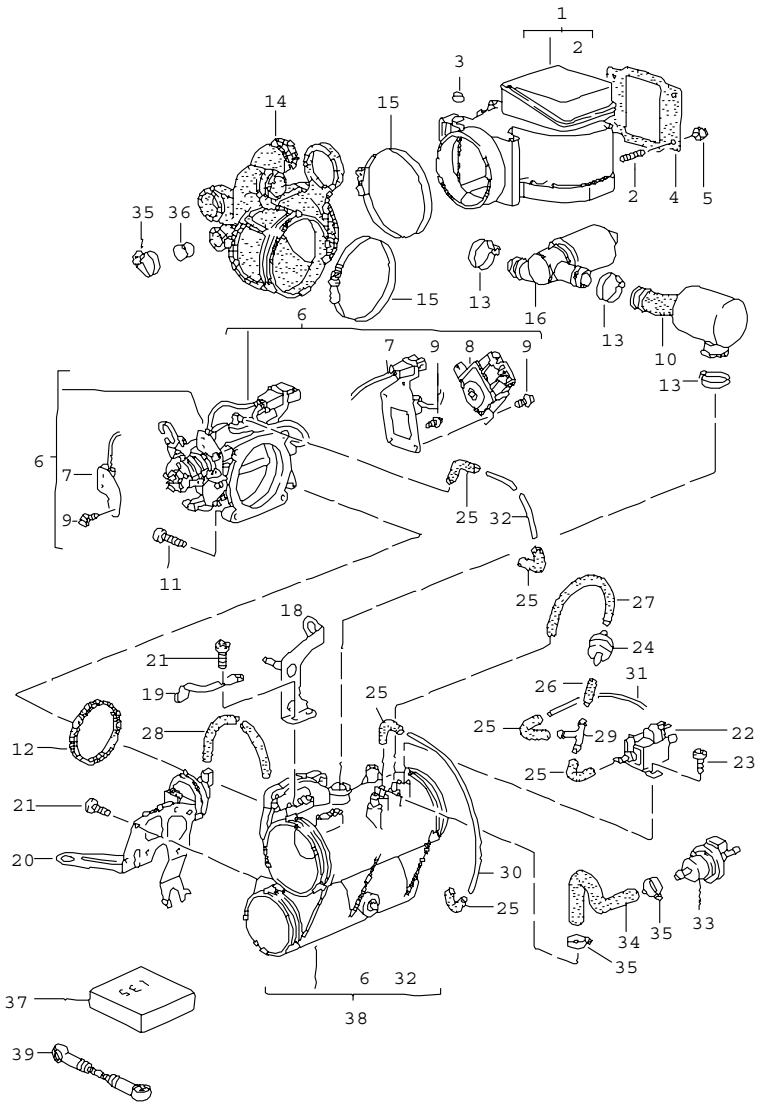

Pos	Part Number	Name	Remarks	Qty	Model
		l-jetronic throttle housing suction housing plastic material			M64.01/02/03
1	964 606 050 00	mass air flow		1	
2	999 062 003 02	stud BM 6 X 18		4	
3	999 703 389 40	plug		1	
3	928 606 221 00	plug		1	M 277
4	928 110 201 01	sealing frame		1	
5	900 910 011 02	lock nut M 6		4	
6	964 110 128 00	throttle body		1	M64.01/03
(6)	964 110 128 30	throttle body		1	M64.02
7	964 606 019 00	microswitch		1	M64.01/03
(7)	964 606 019 01	microswitch		1	M64.02
8	964 606 115 00	throttle-valve switch		1	M64.02
9	900 146 125 02	screw M 4 X 10		4	
10	964 110 652 00	muffler		1	
11	900 067 111 02	pan-head screw M 5 X 18		4	
12	964 110 227 00	sealing ring		1	
13	999 512 380 02	clamp 26,0 -30,1		3	
14	964 110 367 00	air box		1	
15	999 512 350 02	hose clamp 80 - 100		2	
16	964 606 160 00	idle-speed adjuster		1	
18	964 110 219 02	support		1	M 454
19	964 110 229 00	support		1	
20	964 110 012 01	vacuum unit		1	
21	900 146 003 02	oval-head screw M 5 X 10		7	

Pos	Part Number	Name	Remarks	Qty	Model
22	911 618 123 01	vacuum valve		1	
23	999 919 098 02	oval-head screw M 5,0 X 12		2	
24	964 110 950 01	check valve		1	
25	928 574 717 03	protective tube		6	
26	928 574 747 03	connecting piece		1	
-	999 239 031 40	hose 3,5 X 2		X	
27	-	150 MM		1	
28	-	280 MM		1	
29	999 137 004 40	t-socket		1	
-	N 020 139 11	pipe M 4 X 10		*	
30	-	240 MM		1	
31	-	335 MM		1	
32	-	425 MM		1	
33	944 605 240 01	bleeder valve		1	
34	964 110 544 02	hose		1	
35	900 272 002 02	hose clamp AL 10 - 16		3	
36	999 703 385 40	plug 12 X 20		1	M 592 M 339
37	U 964 110 970 01	parts kit		1	M 454
37	964 110 970 02	parts kit		1	M 454
38	964 110 901 00	connecting piece		1	M64.01/03
(38)	964 110 901 30	connecting piece		1	M64.02
39	964 110 649 01	pull rod		1	M 454
		- -- E N D -- -			

Model	Year	MG	SG	Illustration	Restrictions	Update	11:57	24.11.2005	PORSCHE PET PORSCHE
964	94	1	07	107-05		194			

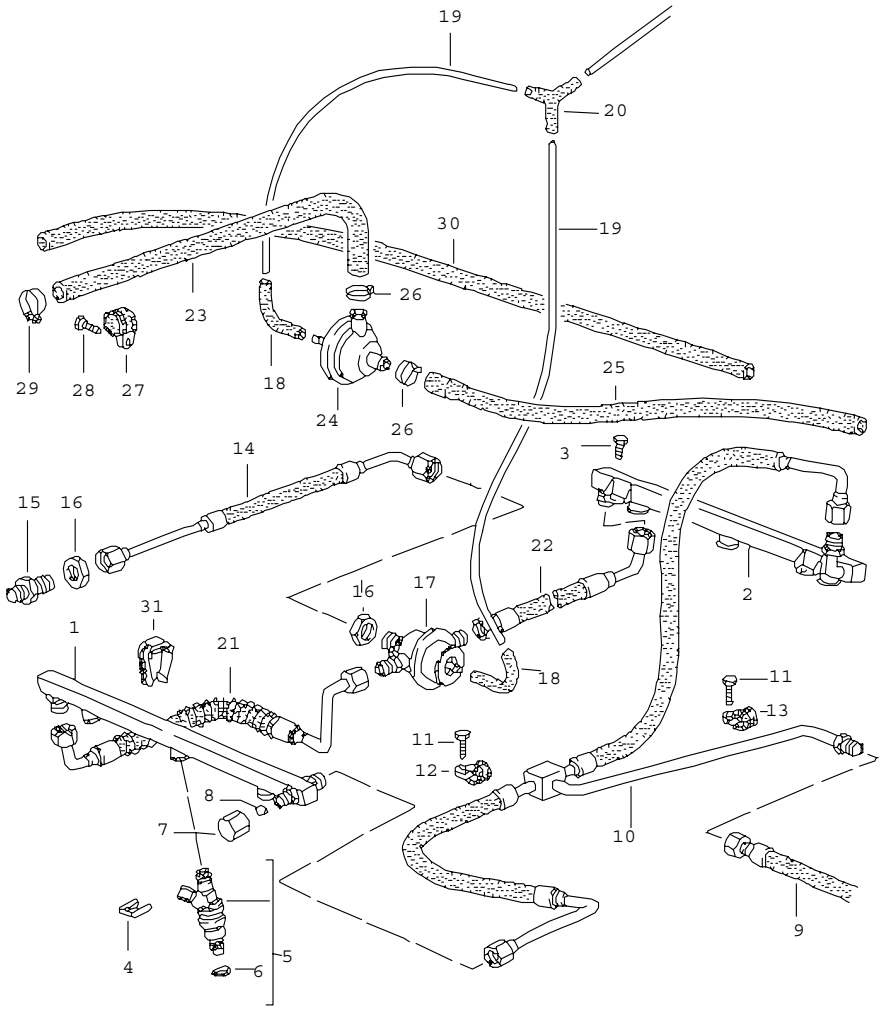

Pos	Part Number	Name	Remarks	Qty	Model
		l-jetronic lines			M64.01/02/03
1	964 110 307 00	fuel collection pipe		1	
2	964 110 308 00	fuel collection pipe		1	
3	900 075 310 02	hexagon-head bolt M 6 X 12		4	
4	930 110 388 00	retaining clip		6	
5	911 606 120 01	injector valve		6	
6	944 110 901 01	o-ring 7,52 X 3,53		6	
7	928 110 475 01	cap nut		1	
8	900 108 022 00	ball 9 MM		1	
9	964 110 415 00	fuel line		1	M64.01/02
9	964 110 415 01	fuel line		1	M64.03
9	964 110 415 00	fuel line		1	M64.03 M 657
9	U 964 110 415 02	fuel line		1	
10	964 110 595 01	fuel line		1	
11	N 010 284 4	hexagon-head bolt M 6 X 10		2	
12	999 511 116 02	clamp D1 10 X 15		1	
13	999 511 153 02	clip D1 8 X 15		1	
14	964 110 413 00	fuel line		1	
15	999 136 027 02	connection piece M 16 X 1,5		1	
16	900 034 013 02	hexagon nut BM 16 X 1,5		2	
17	928 110 198 04	pressure regulator		1	
18	928 574 717 03	protective tube		3	
-	N 020 139 11	pipe 4,0 X 1,0		X	
19	-	330 MM		2	

Pos	Part Number	Name	Remarks	Qty	Model
20	928 573 727 03	y-piece		1	
21	964 110 411 03	hose		1	
22	964 110 412 01	hose		1	
23	964 110 543 01	hose		1	
24	928 110 429 08	vacuum valve		1	
25	928 110 652 05	hose		1	
26	999 512 381 02	clamp 18,8 - 22,6		2	
27	999 511 177 02	clamp D1 20 X 15		1	
28	N 040 268 1	hexagon-head bolt M 6 X 14		1	
29	999 512 554 00	hose clamp LC 12 - 22		2	
30	964 110 540 00	hose		1	M 150
31	964 607 503 00	cable holder		1	
		- -- E N D -- -			

Pos	Part Number	Name	Remarks	Qty	Model

Model	Year	MG	SG	Illustration	Restrictions	Update	11:57	24.11.2005	PORSCHE	PET	PORSCHE
964	94	1	07	107-10		194					

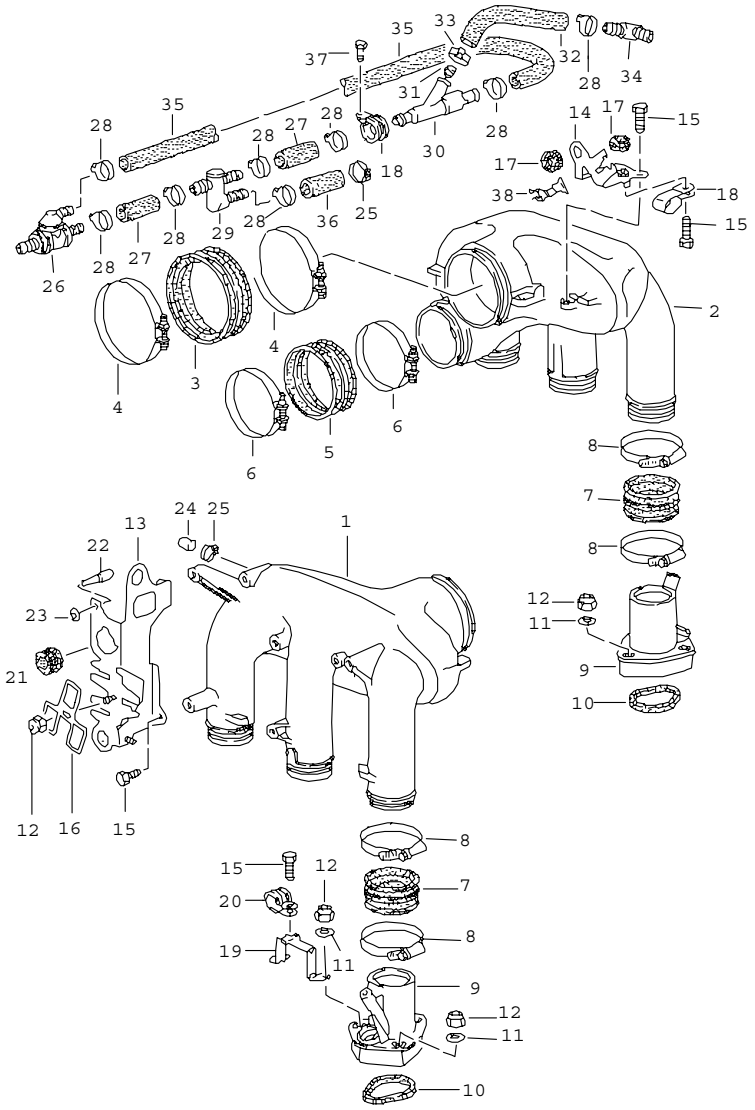

Pos	Part Number	Name	Remarks	Qty	Model
		l-jetronic intake distributor			M64.01/02/03
1	A 964 110 023 00	intake distributor aluminium		1	
1	A 964 110 627 02	intake distributor	-92	1	
1	964 110 627 03	intake distributor plastic material	93-	1	
2	A 964 110 626 00	intake distributor aluminium		1	
2	A 964 110 628 02	intake distributor	-92	1	
2	964 110 628 03	intake distributor plastic material	93-	1	
3	964 110 685 03	rubber sleeve		2	
4	999 512 350 02	hose clamp 80-100		4	
5	A 964 110 686 01	rubber sleeve		2	
5	964 110 686 03	rubber sleeve		2	
6	999 512 006 02	hose clamp 78 X 9		4	
7	964 110 687 03	rubber sleeve		6	
8	999 512 348 02	hose clamp 40-60		12	
9	964 110 711 01	intake manifold		6	
10	964 110 713 00	sealing ring	-91	6	
10	993 110 713 01	sealing ring	92-	6	
11	N 011 524 7	washer A 6,4		14	
12	999 084 094 02	lock nut M 6		18	
12A	900 075 345 02	screw M 6 X35		18	
13	964 110 546 01	support		1	
14	964 110 548 01	support		1	
15	999 072 005 09	hexagon-head bolt M 6 X 12		4	

Pos	Part Number	Name	Remarks	Qty	Model
16	964 606 241 00	tab washer		1	
17	999 702 181 40	grommet 13,5 X 15,5 X 6		2	
18	999 512 428 02	clamp 17 X 15		2	
19	964 110 315 00	support	/L	1	
(19)	964 110 315 01	support	/R	1	
20	999 511 080 02	clamp		1	
21	964 110 510 01	grommet		1	
22	964 110 532 01	connection piece		1	
23	999 507 057 02	clamping washer 8,0		1	
24	930 110 256 02	cap		1	
25	999 512 554 00	hose clamp LC 12-22		2	
26	930 110 667 01	check valve		1	
-	999 181 022 51	hose 11,8 X 19		X	
27	-	45 MM		2	
28	999 512 495 02	clamp 18,0 - 20,3		8	
29	930 110 691 01	connection piece		1	
30	067 133 753 A	venturi tube		1	
31	964 110 278 00	restrictor		1	
32	993 110 513 00	hose	-90	1	
32	964 110 513 01	hose	91-92	1	
32	993 110 513 00	hose	93-	1	
33	999 512 536 02	clamp 20,0 - 24,1		1	
34	999 137 036 40	angled pipe WS 10	-90	1	
(34)	964 207 313 01	connecting piece	91-	1	
35	999 181 068 41	hose		1	
36	964 110 515 00	hose	-90	1	
36	964 110 515 02	hose		1	
37	900 075 014 02	hexagon-head bolt M 6 X 18		1	
38	928 606 282 00	tensioning spring		1	

- -- E N D -- -

Model	Year	MG	SG	Illustration	Restrictions	Update				
964	94	1	07	107-12		194	11:57	24.11.2005	PORSCHE	PET	PORSCHE

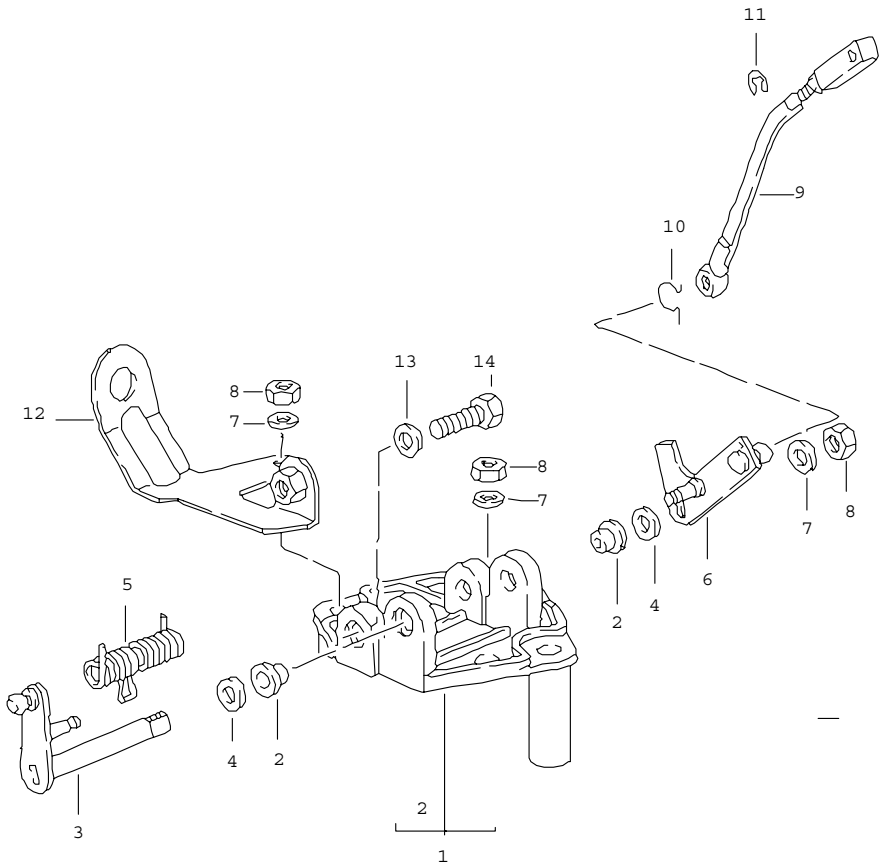

Pos	Part Number	Name	Remarks	Qty	Model
		bracket throttle linkage			M30.69 M64.50
1	911 110 091 07	bracket		1	
2	999 924 069 00	bearing sleeve		2	
3	930 110 019 00	lever		1	
4	930 110 572 00	washer		2	
5	930 110 148 05	spring		1	
6	930 110 110 06	lever		1	
7	900 025 007 02	washer A 8,4		4	
8	900 076 025 02	hexagon nut M 8		4	
9	930 110 079 06	pull rod		1	
10	900 169 014 02	securing clip S 8		1	
11	N 012 325 1	lock washer 4		1	
12	930 110 532 00	support		1	M30.69
12	964 110 532 20	support		1	M64.50
13	999 025 078 02	washer 8,4		1	
14	900 075 079 02	hexagon-head bolt M 8 X 22		1	
		- -- E N D -- -			

Model	Year	MG	SG	Illustration	Restrictions	Update	11:57	24.11.2005	PORSCHE PET PORSCHE
964	94	1	07	107-15		194			

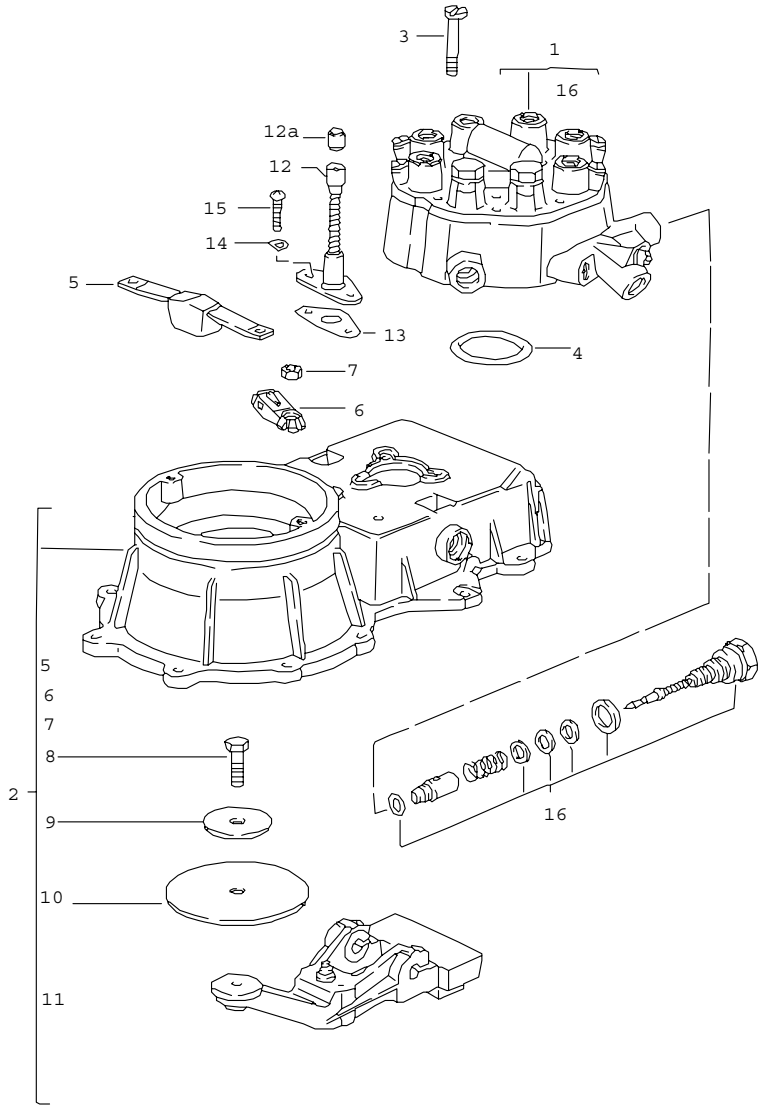

Pos	Part Number	Name	Remarks	Qty	Model
		mixture control unit			M30.69 M64.50
1	> 930 110 923 00	fuel distributor		1	
2	930 110 924 00	mass air flow		1	M30.69
2	964 110 910 00	mass air flow		1	M64.50
3	900 146 045 02	oval-head screw AM 5 X 45		3	
4	911 110 936 01	gasket		1	
5	911 110 961 00	stop		1	
6	911 110 929 00	safety contact		1	
7	911 110 945 00	hexagon nut		1	
8	911 110 944 01	hexagon-head bolt		1	
9	911 110 960 00	support washer		1	
10	911 110 943 01	air flow sensor plate		1	
11	911 110 959 00	control lever		1	
12	930 110 910 02	adjusting key		1	
12A	930 110 921 00	plug		1	
13	930 110 911 00	gasket		1	
14	N 012 005 3	lock ring B 5		2	
15	N 014 128 13	oval-head screw AM 5 X 8		2	
16	928 110 920 01	parts kit pressure regulator		1	
		- -- E N D -- -			

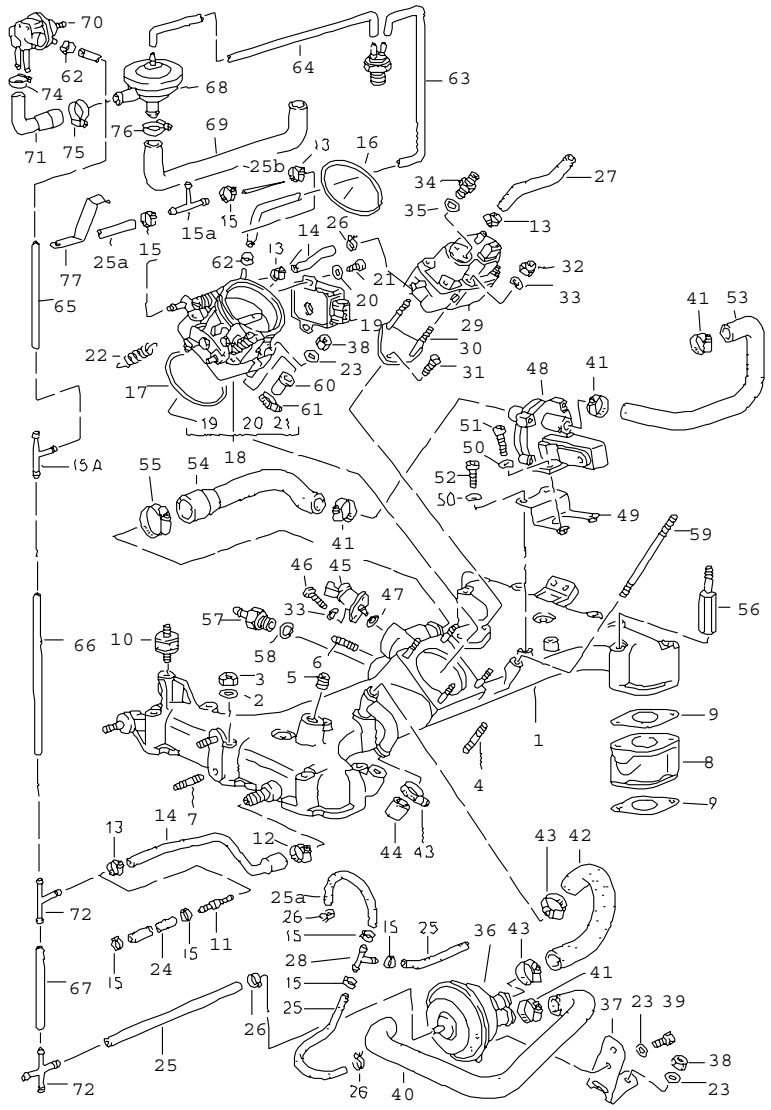

Pos	Part Number	Name	Remarks	Qty	Model
		k-jetronic			M30.69 M64.50
1	930 110 034 04	intake manifold		1	
2	900 025 007 02	washer A 8,4		12	
3	900 076 025 02	hexagon nut M 8		12	
4	999 062 093 02	screw BM 6 X 35		4	
5	999 504 004 00	threaded insert M 8		3	
6	999 062 022 02	stud M 8 X 12		2	
7	999 062 009 02	stud BM 8 X 28		3	
8	930 110 141 03	flange		6	
9	* 930 110 197 10	gasket		12	
10	930 110 194 00	bonded rubber buffer		3	
11	999 137 051 40	connecting piece		1	
12	999 512 554 00	hose clamp 12 - 22		1	
13	999 512 427 02	hose clamp 8 - 16		4	
14	930 110 544 00	hose		1	M30.69
14	964 110 544 20	hose		1	M64.50
15	999 512 522 02	clamp 9,5 - 11,5		5	
16	* 999 701 477 40	round seal 71,2 X 5,7		1	
17	* 999 701 468 40	round seal 67,5 X 75,4 X 4		1	
18	930 110 250 10	throttle housing		1	M30.69
18	964 110 250 20	throttle housing		1	M64.50
19	931 606 119 01	throttle-valve switch		1	
20	N 012 224 3	spring washer B 4		2	

Pos	Part Number	Name	Remarks	Qty	Model
21	900 146 011 02	oval-head screw M 4 X 10		2	
22	930 110 497 00	tension spring		1	
23	N 011 524 7	washer A 6,4		8	
-	000 043 204 94	hose black 4 X 10		X	
24	-	75 MM		2	
25	-	250 MM		2	
25A	-	250 MM		1	
25B	-	620 MM		1	M64.50
26	999 512 522 02	clamp 11 - 11,6		3	
27	930 110 714 00	hose		1	
28	999 137 005 40	t-piece		1	
29	965 606 105 00	warm-up valve		1	M30.69
29	965 606 106 00	warm-up valve		1	M64.50
30	930 110 310 01	support		1	
31	999 147 005 02	lens-head screw M 6 X 16		2	
32	900 910 012 02	lock nut M 6		2	
33	N 012 226 5	spring washer A 6		4	
34	900 915 004 02	connection piece		1	
35	* 900 123 144 30	sealing ring A 10 X 13,5		1	
36	930 110 173 00	vacuum limiter		1	
37	930 110 167 01	retaining bracket		1	
38	900 076 010 02	hexagon nut M 6		6	
39	999 072 005 09	hexagon-head bolt M 6 X 12		2	
40	930 110 370 01	hose		1	M30.69
40	964 110 370 20	hose		1	M64.50
41	999 512 392 00	hose clamp 20 - 32		5	
-	999 239 007 40	hose 15 X 24		X	
42	-	210 MM		1	
43	999 512 346 00	hose clamp 16 - 25		3	
44	930 110 256 00	cap		1	
45	930 606 107 01	electric starting valve		1	
46	N 014 740 2	pan-head screw M 6 X 16		2	
47	* 999 701 395 50	o-ring		1	
48	930 606 102 00	auxiliary air regulator		1	
49	930 110 229 01	support		1	
50	N 012 226 5	spring washer B 6		4	
51	900 067 009 02	pan-head screw M 6 X 15		2	
52	900 067 008 02	pan-head screw M 6 X 12		2	
53	930 110 335 06	hose		1	
54	930 110 335 07	air hose		1	
55	999 512 252 02	hose clamp 23 - 35		1	
56	930 110 722 00	screw bolt		1	
57	999 230 378 02	union 8/M 16 X 1,5		1	
58	900 123 018 30	sealing ring A 16 X 20		1 1	
59	999 062 234 02	stud BM 8 X 135		1	
62	311 133 343 A	hose clamp		2	M64.50
-	000 043 204 97	hose 3,2 X 7		X	

Pos	Part Number	Name	Remarks	Qty	Model
63	-	370 MM		1	M64.50
64	-	500 MM		1	M64.50
65	-	70 MM		1	M64.50
66	-	220 MM		1	M64.50
67	-	120 MM		1	M64.50
68	928 110 429 08	vacuum valve		1	M64.50
69	964 110 542 21	hose		1	M64.50
70	944 110 429 00	control valve		1	M64.50
71	964 110 552 21	hose		1	M64.50
72	999 137 075 40	t-socket		1	M64.50
73	999 137 017 40	distributing piece		1	M64.50
74	999 512 568 02	clamp 13,9 - 16		1	M64.50
75	999 512 504 02	clamp 19,2 - 21,8		1	M64.50
76	999 512 346 02	hose clamp 16 - 25/9		1	M64.50
77	964 110 554 20	support		1	M64.50
		- -- E N D -- -			

Pos	Part Number	Name	Remarks	Qty	Model

Model	Year	MG	SG	Illustration	Restrictions	Update				
964	94	1	07	107-35		194	11:58	24.11.2005	PORSCHE	PET	PORSCHE

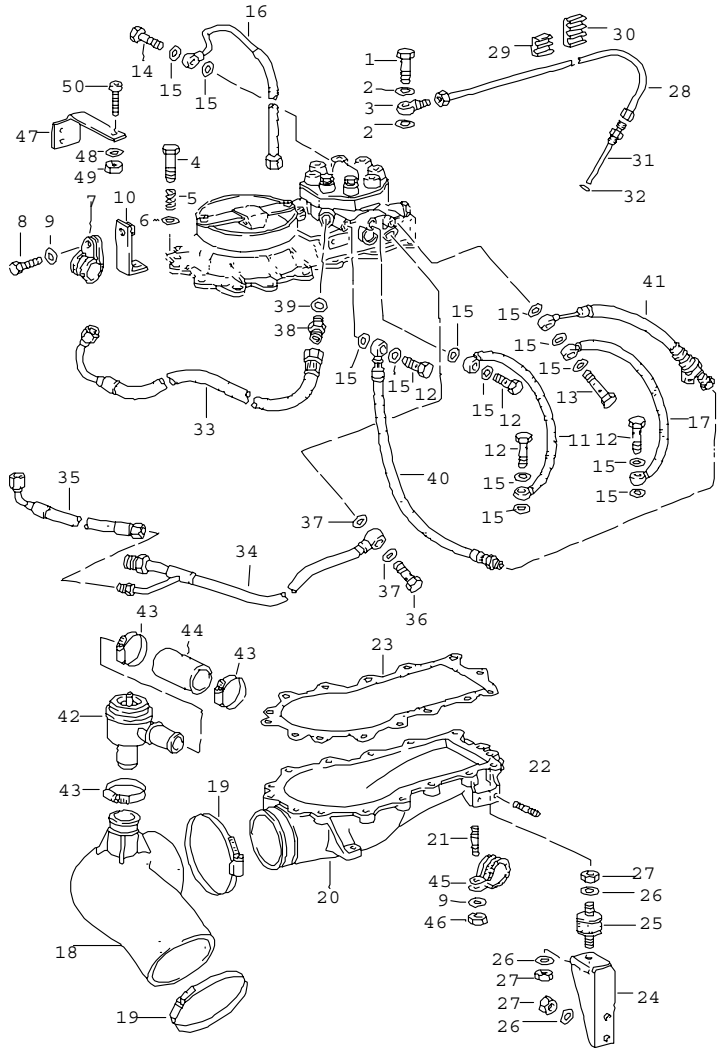

Pos	Part Number	Name	Remarks	Qty	Model
		k-jetronic			M30.69 M64.50
1	930 110 547 00	banjo bolt		6	
2	* 900 123 144 30	sealing ring A 10 X 13,5		12	
3	999 215 002 02	ring piece		6	
4	900 067 011 02	pan-head screw M 6 X 20		4	
4	900 067 089 02	pan-head screw M 6 X 25		10	
4	900 075 017 02	hexagon-head bolt M 6 X 25		1	
5	911 110 364 00	compression spring		11	
6	900 031 011 02	washer 6,4		15	
7	999 511 085 02	clamp		1	
8	900 075 057 02	hexagon-head bolt M 6 X 16		1	
9	N 011 524 7	washer A 6,4		2	
10	930 110 434 01	clip		1	
11	930 110 303 01	fuel line (ZULAUF-STARTVENTIL)		1	
12	911 110 899 00	banjo bolt A 2/3		5	
13	N 900 887 01	banjo bolt LL 3		1	
14	928 105 476 00	banjo bolt		1	
15	* 900 123 115 30	sealing ring A 8 X 11,5		13	
16	930 110 302 01	fuel line intake warm-up valve		1	
17	930 110 305 02	fuel line return warm-up valve		1	
18	930 110 382 00	hose elbow		1	

Model	Year	MG	SG	Illustration	Restrictions	Update	11:58	24.11.2005	PORSCHE PET PORSCHE
964	94	1	07	107-35		194			

Pos	Part Number	Name	Remarks	Qty	Model
19	999 512 350 02	hose clamp 80 - 100		2	
20	930 110 035 04	lower part		1	
21	999 062 002 02	stud BM 6 X 15		1	
22	999 062 022 02	stud M 8 X 12		2	
23	* 930 110 394 00	gasket		1	
24	930 110 133 00	retaining bracket		1	
25	930 110 194 00	bonded rubber buffer		3	
26	900 025 007 02	washer A 8,4		7	
27	900 076 025 02	hexagon nut M 8		7	
28	930 110 041 03	injection line cylinder 1		1	
28	930 110 042 03	injection line cylinder 2		1	
28	930 110 043 03	injection line cyl. 3		1	
28	930 110 044 02	injection line cyl. 4		1	
28	930 110 045 03	injection line cylinder 5		1	
28	930 110 046 03	injection line cyl. 6		1	
29	928 110 150 00	terminal		1	
30	928 110 150 01	terminal		2	
31	931 110 225 00	injector valve		6	M30.69
31	964 110 235 20	injector valve		6	M64.50
32	* 900 123 144 30	sealing ring A 10 X 13,5		6	
33	930 110 301 07	fuel line (ZULAUF)		1	
34	930 110 304 06	fuel line (RUECKLAUF)		1	
35	930 110 304 05	fuel line (RUECKLAUF)		1	
36	N 021 071 2	banjo bolt		1	
37	* 900 123 101 30	sealing ring A 12 X 18		2	
38	N 020 704 2	connection piece		1	
39	* 900 123 116 30	sealing ring A 12 X 15,5		1	
40	930 110 364 00	fuel line		1	
41	477 133 071 A	cycle valve		1	
42	993 110 337 50	shut-off valve		1	
43	999 512 272 02	hose clamp 25 - 40		3	
-	000 043 204 98	hose 25 X 5,0		X	
44	-	70 MM		1	
45	N 020 647 1	clamp		1	
46	999 084 074 02	lock nut M 6		1	
47	964 110 321 20	support		1	M64.50
		- -- E N D -- -			

Model	Year	MG	SG	Illustration	Restrictions	Update				
964	94	1	07	107-40		194	11:58	24.11.2005	PORSCHE	PET	PORSCHE

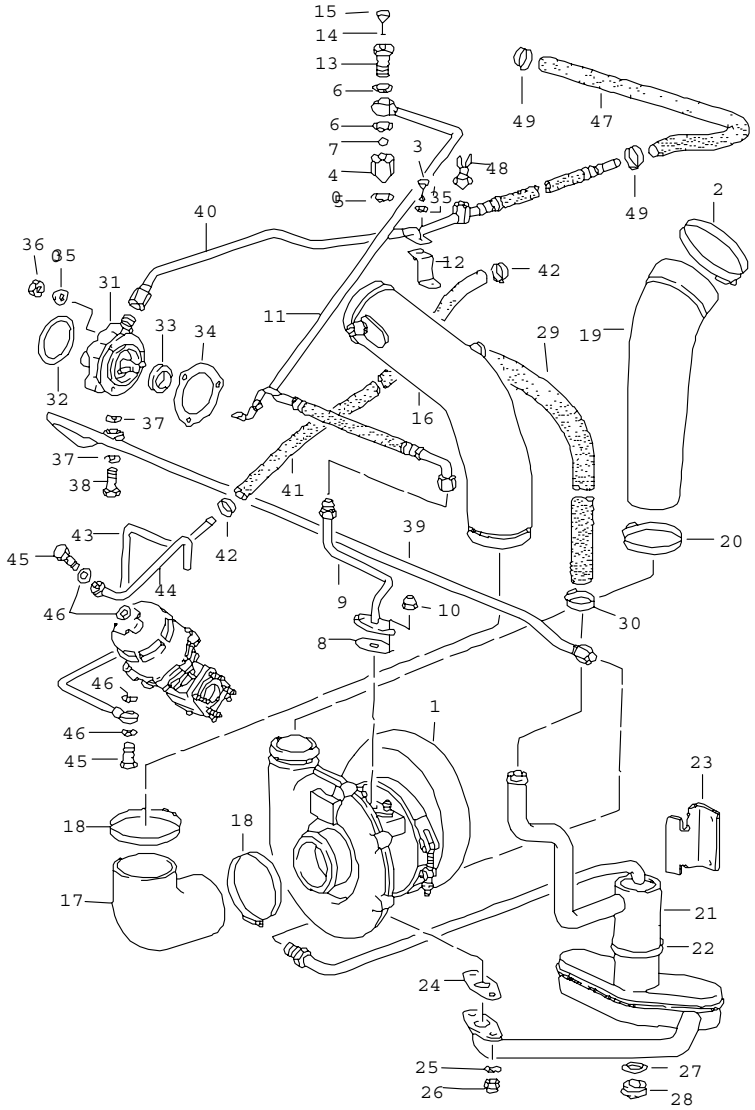

Pos	Part Number	Name	Remarks	Qty	Model
		turbocharging oil supply for turbocharger			M30.69 M64.50
1	-	turbocharger see group 2/02/16			
2	999 512 350 02	hose clamp 80 - 100		1	
3	999 072 005 09	hexagon-head bolt M 6 X 12		1	
4	930 107 705 00	reducing socket		1	M30.69
5	900 123 140 30	sealing ring A 18 X 22		1	M30.69
6	900 123 007 30	sealing ring A 14 X 18		2	M30.69
7	900 108 022 00	ball 9 MM		1	M30.69
8	* 930 107 123 01	gasket		1	
9	930 107 124 01	oil pipe		1	M30.69
(9)	964 107 125 20	oil pipe		1	M64.50
10	999 084 052 02	lock nut M 8		2	
11	930 107 125 07	oil pipe		1	M30.69
12	930 107 340 00	retaining bracket		1	
13	930 107 706 00	banjo bolt		1	M30.69
14	900 123 144 30	sealing ring A 10 X 13.5		1	M30.69
15	900 124 023 0A	screw plug M 10 X 1		1	M30.69
(16)	964 110 279 20	intake manifold		1	M30.69
16	964 110 279 20	intake manifold		1	M64.50
17	930 110 259 00	hose		1	
18	999 512 351 02	hose clamp 70 - 90		2	
19	930 110 368 00	hose		1	

Pos	Part Number	Name	Remarks	Qty	Model
20	* 999 512 349 02	hose clamp 50 - 70		1	
21	930 107 001 08	oil collection container		1	M30.69
21	964 107 001 20	oil collection container		1	M64.50
22	999 512 351 02	hose clamp 50 X 9		2	
23	930 107 113 01	retaining bracket		1	
24	* 930 107 116 01	gasket		1	
25	900 025 007 02	washer A 8,4		2	
26	999 084 052 02	lock nut M 8		2	
27	* 900 123 055 30	sealing ring A 12 X 17		1	
28	900 219 006 02	screw plug M 12 X 1,5		1	
-	000 043 204 95	hose 22 X 4,0		*	
29	-	500 MM		1	
30	999 512 252 02	hose clamp		2	
31	964 107 005 21	oil pump		1	
32	* 999 707 289 40	round seal 47 X 2		1	
33	* 999 113 246 40	radial sealing ring A 10 X 18,23		1	
34	* 930 105 197 05	gasket		1	
35	N 011 524 7	washer A 6,4		4	
36	900 076 010 02	hexagon nut M 6		3	
37	* 900 123 018 30	sealing ring A 16 X 20		2	
38	900 175 005 02	banjo bolt		1	
39	930 107 338 03	oil pipe		1	
40	930 107 336 04	oil pipe		1	M30.69
(40)	964 107 336 21	oil pipe		1	M64.50
-	999 239 006 40	hose 8 X 14		X	
41	-	420 MM		1	
42	999 512 160 02	hose clamp		2	
43	930 123 053 01	control line		1	
44	930 123 043 04	vent line		1	
45	N 021 071 2	banjo bolt 8		2	
46	* 900 123 043 30	sealing ring A 12 X 15,5		4	
47	930 107 336 05	oil pipe		1	
48	964 110 228 20	thermo valve		1	

- -- E N D -- -

Model	Year	MG	SG	Illustration	Restrictions	Update	11:58	24.11.2005	PORSCHE PET PORSCHE
964	94	1	07	107-45		194			

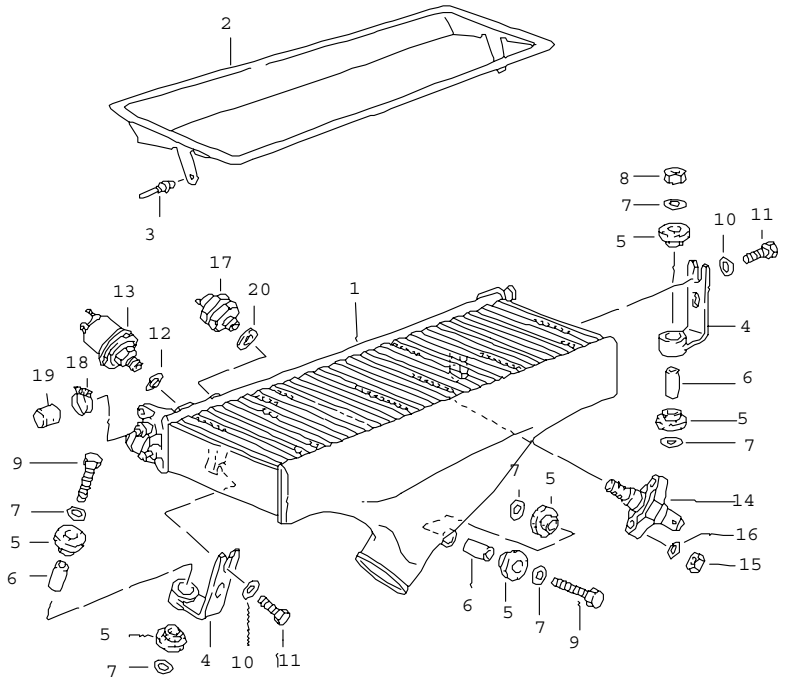

Pos	Part Number	Name	Remarks	Qty	Model
		charge air cooler			M30.69 M64.50
1	930 110 330 01	charge air cooler		1	
2	964 110 034 20	air duct		1	
3	999 190 395 30	blind rivet		2	
4	930 110 223 02	support		2	
5	930 113 430 00	rubber mounting		6	
6	930 110 232 00	spacer sleeve		3	
7	900 151 008 02	washer 8,4		6	
8	999 084 095 02	lock nut M8		1	
9	N 010 340 6	hexagon-head bolt M 8 X 40		1	
10	900 025 007 02	washer A 8,4		2	
11	900 075 085 02	hexagon-head bolt M 8 X 20		1	
11	900 075 358 02	hexagon-head bolt M 8 X 20		1	
12	A 900 123 106 30	sealing ring A 18 X 24	-92	1	
12	900 123 106 30	sealing ring A 18 X 24		1	
13	993 606 103 00	pressure transmitter boost pressure		1	
14	965 606 116 00	temperature sensor		1	
15	900 910 012 02	lock nut M 6		2	
16	N 011 524 7	washer A 6,4		2	
17	930 606 101 00	switch boost pressure		1	
18	999 512 045 02	hose clamp 22 X 9		1	
19	930 110 256 01	cap		1	

Pos	Part Number	Name	Remarks	Qty	Model	Pos	Part Number	Name	Remarks	Qty	Model
20	900 123 144 30	sealing ring A 10 X 13,5		1							
		- -- E N D -- -									

Model	Year	MG	SG	Illustration	Restrictions	Update			
964	94	1	08	108-00		194	11:59	24.11.2005	PORSCHE PET PORSCHE

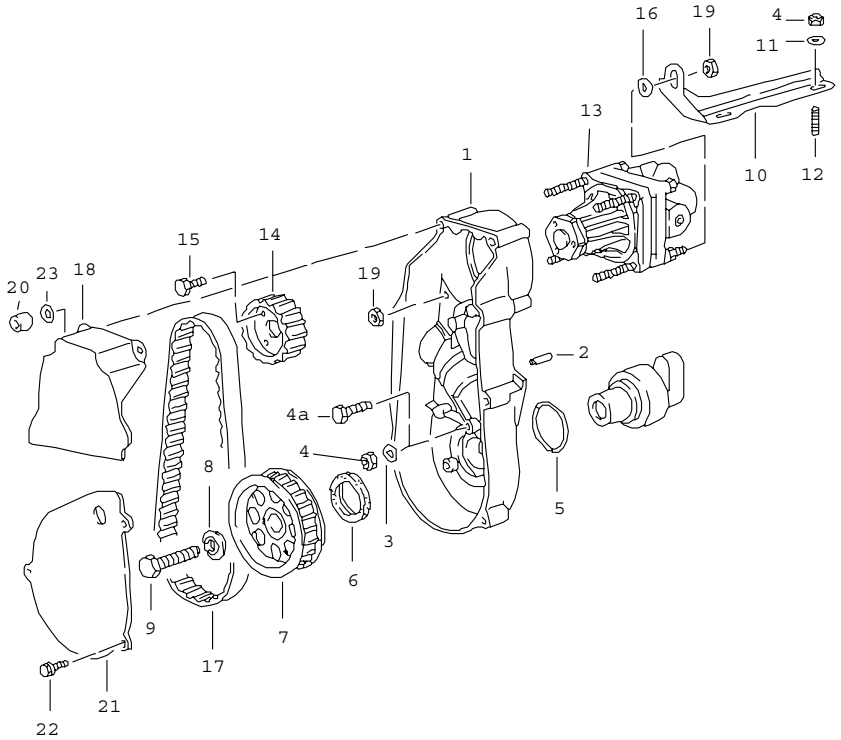

Pos	Part Number	Name	Remarks	Qty	Model
		power-steering pump			
1	A 964 147 185 02	bracket	-89	1	
1	964 147 185 05	bracket		1	
2	900 095 109 01	roll pin 3,5 X 22		1	
3	N 011 524 7	washer A 6,4		3	
4	999 084 094 02	lock nut M 6	-90	5	
4A	999 217 113 02	hexagon-head bolt M 6 X 28	91-	3	
5	999 707 293 40	o-ring 40 X 4		1	
6	999 113 463 40	shaft seal A 30 X 42 X 7		1	
7	964 147 181 04	gear wheel		1	
8	964 147 305 00	washer		1	
9	900 082 072 01	hexagon-head bolt M 12 X 1,5 X 50		1	
10	964 147 189 01	angle		1	
11	N 011 666 7	washer B 6,4		2	
12	999 062 085 02	stud BM 6 X 20		2	
13	> 964 347 432 02	power-steering pump		1	
14	964 147 183 04	gear wheel		1	
15	999 072 005 09	hexagon-head bolt M 6 X 12		3	
16	900 151 008 02	washer B 8,4		1	
17	964 147 187 03	toothed belt		1	
18	964 147 192 03	cover		1	
19	N 015 083 2	hexagon nut M 8		3	
20	999 085 001 02	socket head nut M 8		2	

Pos	Part Number	Name	Remarks	Qty	Model	Pos	Part Number	Name	Remarks	Qty	Model
21	964 147 191 01	cover		1							
22	999 143 004 08	locking screw M 6 X 12		3							
23	N 012 241 8	spring washer B8	91-	2							
		- -- E N D -- -									

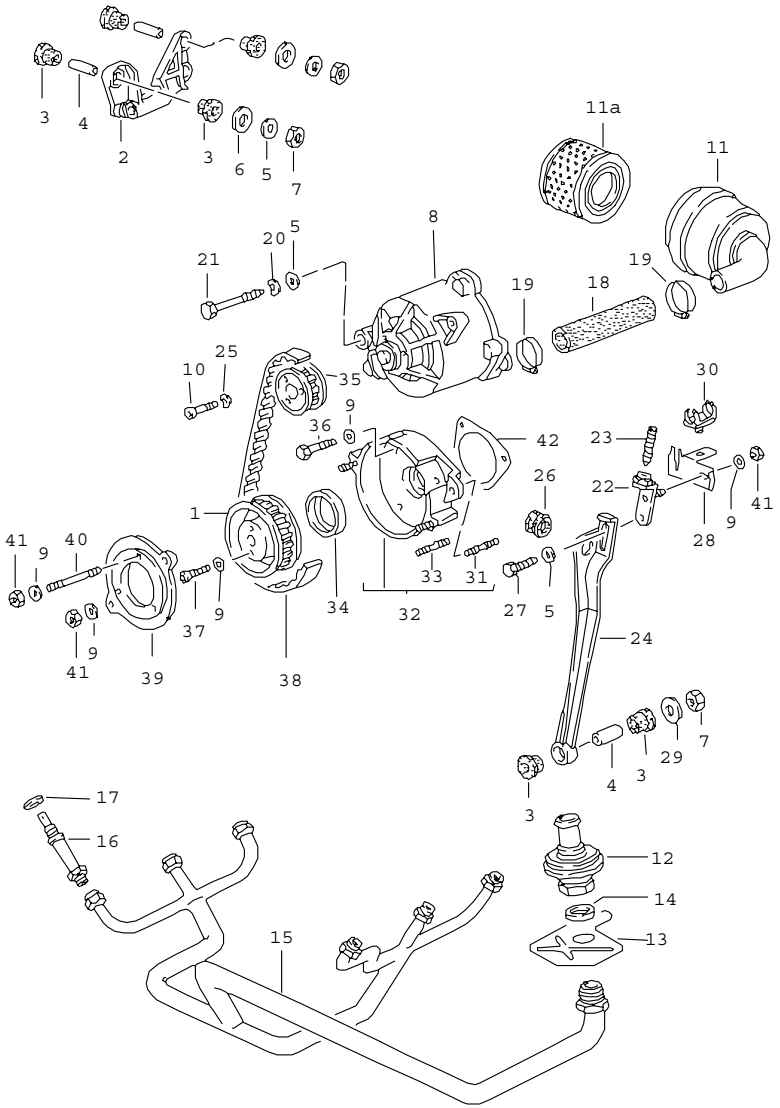

Pos	Part Number	Name	Remarks	Qty	Model
		air injection			M30.69 M64.50
1	930 113 025 02	pulley		1	
2	930 113 159 02	bracket		1	
3	930 113 161 00	rubber mounting		8	
4	930 113 163 00	spacer sleeve		4	
5	900 025 007 02	washer A 8,4		6	
6	900 151 008 02	washer B 8,4		3	
7	900 076 025 02	hexagon nut M 8		4	
8	930 113 114 01	air pump		1	
9	N 011 524 7	washer A 6,4		11	
10	N 014 740 2	pan-head screw M 6 X 16		3	
11	930 113 120 01	air cleaner		1	
11A	930 113 401 00	filter cartridge		1	
12	911 113 115 01	check valve		1	
13	930 113 135 01	cover plate		1	
14	900 123 060 30	sealing ring A 24 X 29		2	
15	930 113 043 02	air tube		1	
16	911 113 145 02	union		6	
17	900 123 033 20	sealing ring A 10 X 13,5 C 4		6	
18	999 239 004 40	breather hose		1	
19	999 512 441 02	hose clamp 20-32/9		2	
20	N 012 241 8	spring washer B 8		1	
21	N 010 391 4	hexagon-head bolt M 8 X 100		1	
22	930 113 187 01	bracket		1	

Pos	Part Number	Name	Remarks	Qty	Model	Pos	Part Number	Name	Remarks	Qty	Model
23	900 068 004 02	threaded pin M 8 X 45		1							
24	930 113 171 01	support		1							
25	900 031 011 02	washer 6,4		3							
26	999 702 170 50	grommet		1							
27	900 075 099 02	hexagon-head bolt M 8 X 30		1							
28	965 606 136 00	support		1							
29	900 151 008 02	washer B 8,4		1							
30	999 651 203 40	cable holder		1							
31	999 062 009 02	stud BM 8 X 28		1							
32	930 113 031 04	intermediate flange		1							
33	999 062 055 02	stud BM 6 X 12		2							
34	999 113 464 40	shaft seal		1							
35	930 113 017 07	gear wheel		1							
36	900 075 057 02	hexagon-head bolt M 6 X 16		3							
37	900 067 013 02	pan-head screw M 6 X 35		2							
38	999 192 131 50	toothed belt (70 ZAEHNE)		1							
39	930 113 033 02	cover		1							
40	999 062 123 02	stud BM 6 X 45		3							
41	900 076 010 02	hexagon nut M 6		6							
42	930 105 197 05	gasket		1							
		- -- E N D -- -									

Model	Year	MG	SG	Illustration	Restrictions	Update				
964	94	1	08	108-07		194	11:59	24.11.2005	PORSCHE	PET	PORSCHE

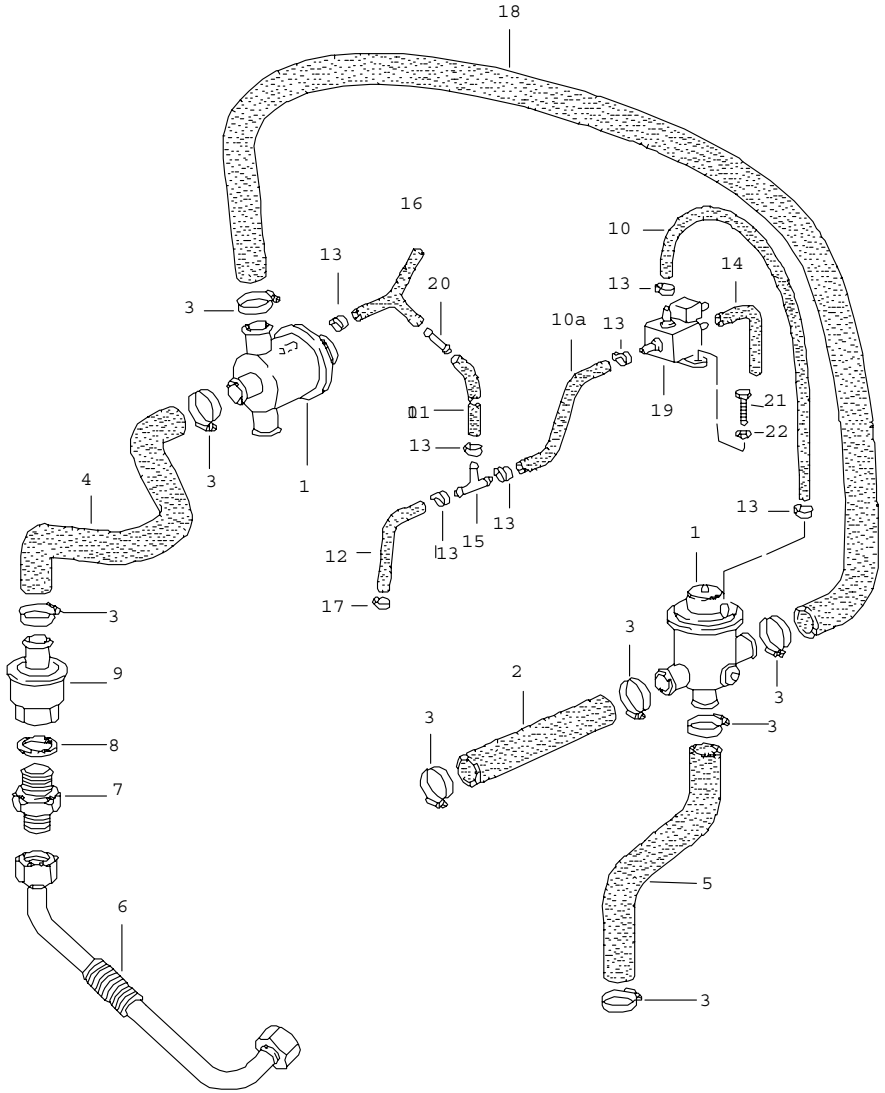

Pos	Part Number	Name	Remarks	Qty	Model
		air injection			M30.69 M64.50
1	930 113 147 01	diverter valve		2	
2	930 113 118 02	hose		1	
3	999 512 441 02	hose clamp 20 - 32/9		8	
4	930 113 181 03	hose		1	
5	930 113 181 04	hose		1	
6	930 113 042 02	air tube		1	
7	999 136 032 00	connection piece M 24 X 2		1	
8	900 123 060 30	sealing ring A 24 X 29		2	
9	911 113 115 01	check valve		1	
-	000 043 204 97	hose green 3,2 X 7		X	
10	-	370 MM		1	
10A	-	370 MM		1	
11	-	550 MM		1	
12	-	70 MM		1	
13	311 133 343 A	hose clamp		6	
14	928 574 717 03	protective tube		1	
15	999 137 004 40	t-socket		1	
16	928 573 727 02	distributing piece		1	
17	999 512 454 02	hose clamp 7 X 7		1	
18	930 110 334 04	hose		1	
19	911 618 123 00	change-over valve		1	
20	999 137 053 40	intermediate piece GS 4		1	
21	999 072 005 09	hexagon-head bolt M 6 X 12		1	

Pos	Part Number	Name	Remarks	Qty	Model	Pos	Part Number	Name	Remarks	Qty	Model
22	N 011 524 7	washer A 6,4		1							
		- -- E N D -- -									

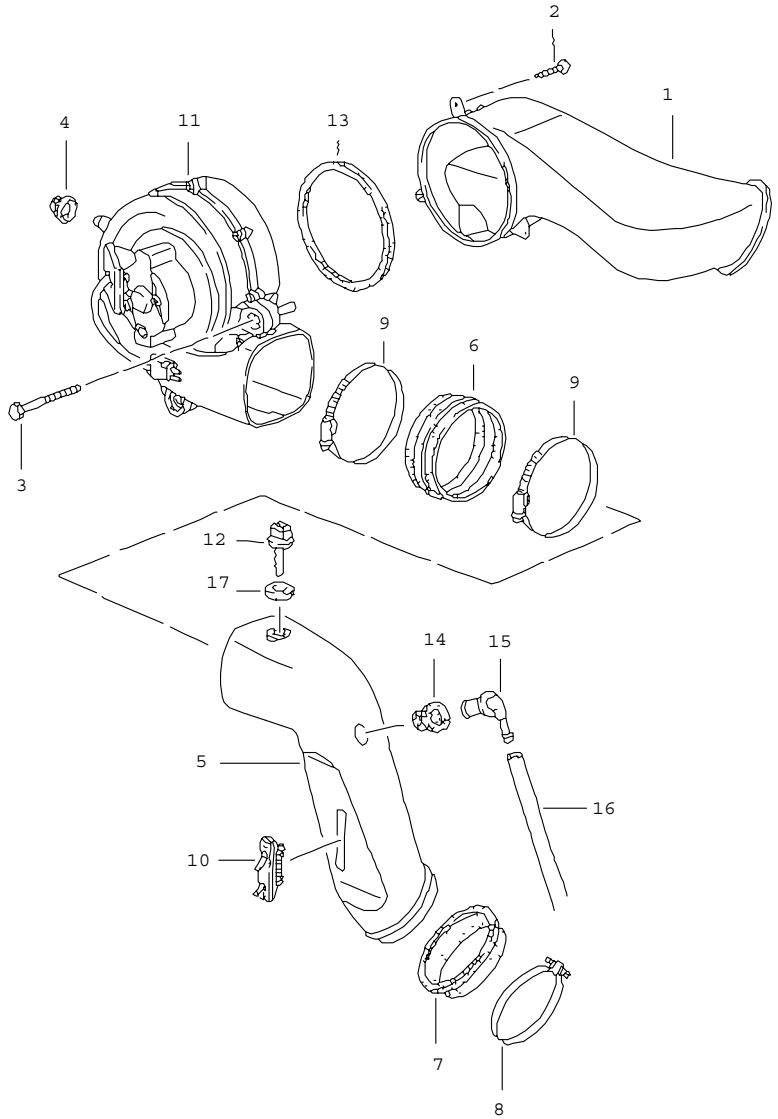

Pos	Part Number	Name	Remarks	Qty	Model
		additional blower			M64.01/02/03
1	964 211 323 03	hot air socket		1	
2	999 919 090 02	oval-head screw 5 X 14		3	
3	N 010 367 4	hexagon-head bolt M 6 X 60		2	
4	999 702 171 50	grommet 15 X 21 X 9,5		1	
5	964 211 341 01	hot-air manifold	-92	1	
5	964 211 341 02	hot-air manifold	93-	1	
6	964 211 311 02	rubber sleeve		1	
7	964 211 348 01	rubber seal		1	
8	999 512 505 02	clip 102 X 12		1	
9	999 512 539 00	hose clamp 90-110		2	
10	A 964 616 550 00	series resistor	-90	1	
10	964 616 550 02	series resistor	91-	1	
11	A 964 624 328 00	blower	-93	1	
11	993 624 328 01	blower	94-	1	
12	964 659 120 00	outer sensor		1	
13	964 624 338 00	gasket		1	
14	911 355 922 00	plug		1	
15	911 355 323 00	intake socket		1	
-	000 043 204 78	hose 6,0 X 2,0		X	
16	-	360 MM			
17	964 659 120 10	gasket		1	
		- -- E N D -- -			

Model	Year	MG	SG	Illustration	Restrictions	Update	12:00	24.11.2005	PORSCHE PET PORSCHE
964	94	1	08	108-15		194			

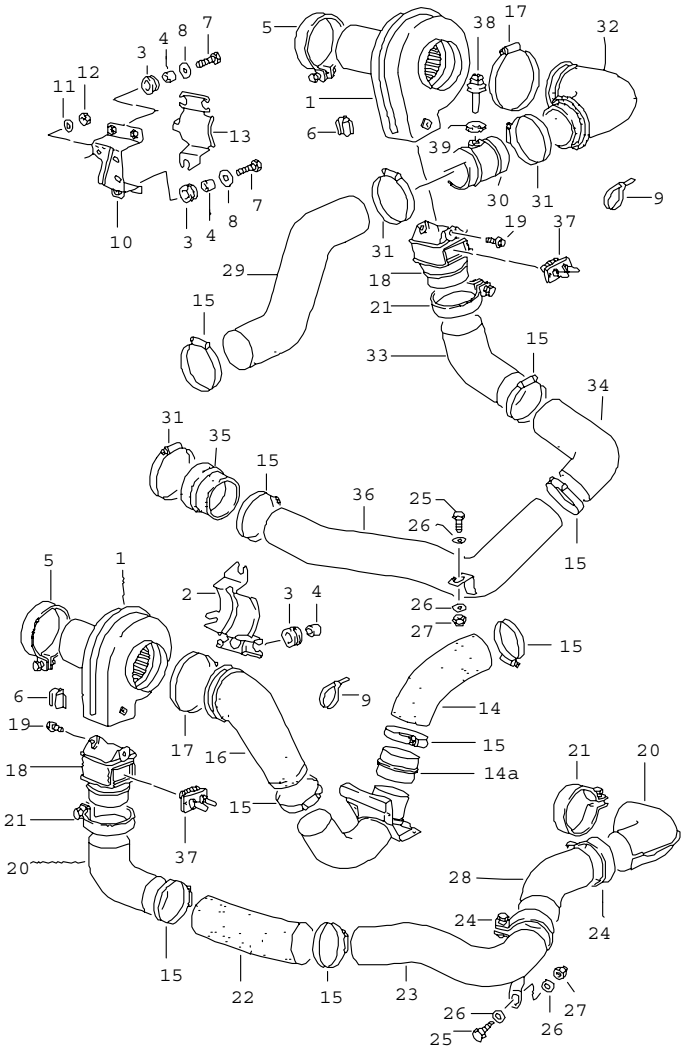

Pos	Part Number	Name	Remarks	Qty	Model
		additional blower			M30.69 M64.50
1	965 624 151 00	blower		2	
2	965 624 311 01	clamp		1	
3	965 624 315 00	grommet		6	
4	965 624 320 00	spacer sleeve		6	
5	999 512 244 02	clip SP 77/20 SN		2	
6	999 591 746 02	cable terminal		2	
7	900 075 016 02	hexagon-head bolt M 6 X 22		6	
8	N 011 612 3	washer R 6,6		6	
9	443 971 850 A	tie-wrap		2	
10	965 624 013 00	support		1	
11	N 011 524 7	washer A 6,4		2	
12	900 076 010 02	hexagon nut M 6		3	
13	965 624 310 01	clamp		1	
14	930 211 196 00	heater hose		1	M30.69
14	964 106 238 20	heater hose		1	M64.50
14A	964 106 285 20	intermediate piece		1	M64.50
15	999 512 543 00	hose clamp 50 - 70		9	
16	930 211 239 00	hose		1	
17	999 512 542 00	hose clamp 80 - 100		2	
18	930 211 240 01	connecting piece		2	
19	900 075 430 02	screw M 5 X 10		4	
20	930 211 134 00	adapter		2	
21	999 512 546 00	clip 67 / 20		3	

Pos	Part Number	Name	Remarks	Qty	Model
22	930 211 238 01	hose		1	
23	930 211 136 01	heating tube		1	
24	999 512 548 00	clip 61 X 20		2	
25	900 075 318 02	hexagon-head bolt M 8 X 16		2	
26	999 025 078 02	washer A 8,4		4	
27	900 910 097 02	lock nut VF M 8		2	
28	930 211 137 00	heating tube		1	
29	930 211 246 00	hose		1	
30	930 211 244 01	connecting piece		1	
31	999 512 541 00	hose clamp 60 - 80		3	
32	930 211 242 00	air box		1	
33	911 211 131 00	adapter		1	
34	930 211 238 01	hose		1	
35	930 211 234 00	sleeve		1	
36	930 211 236 00	heating tube		1	M30.69 M64.50
37	965 616 101 00	resistor		2	
38	964 659 120 00	outer sensor		1	
39	964 659 120 10	gasket		1	
		- -- E N D -- -			

Pos	Part Number	Name	Remarks	Qty	Model

Model	Year	MG	SG	Illustration	Restrictions	Update	12:00	24.11.2005	PORSCHE PET PORSCHE
964	94	1	09	109-00		194			

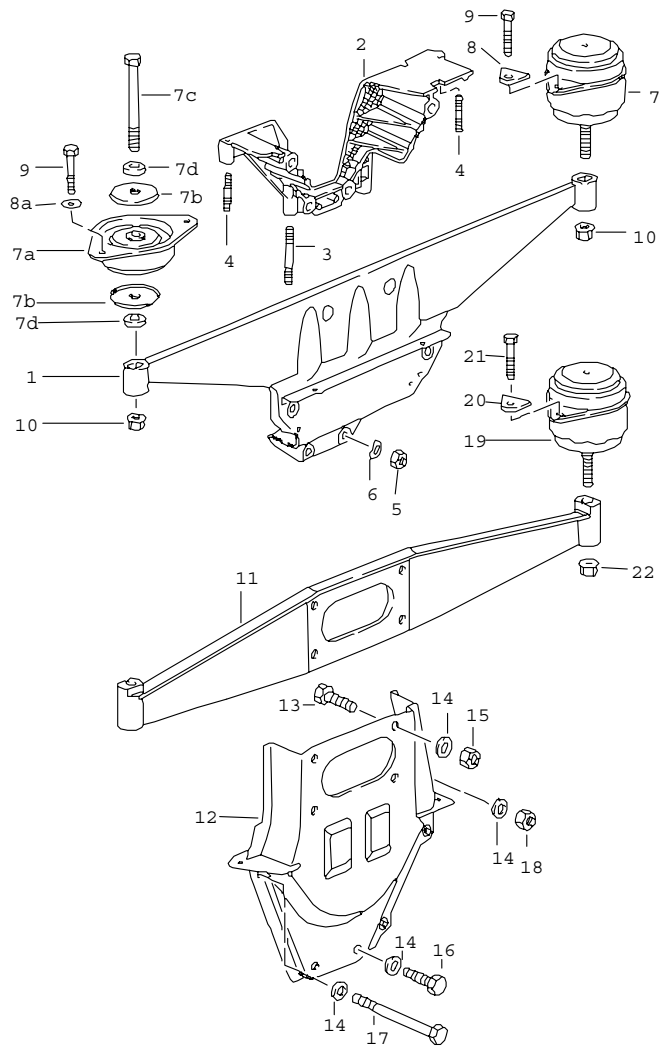

Pos	Part Number	Name	Remarks	Qty	Model
		engine suspension			
		CARRERA 2/4/RS			
1	964 115 021 90	engine carrier		1	
2	964 115 011 02	motor console		1	
3	999 062 096 02	stud B M 6 X 40		1	
4	999 062 002 02	stud B M 6 X 15		3	
5	N 011 010 13	hexagon nut M 10		4	
6	900 028 005 02	spring washer A 10		4	
7	964 375 049 00	engine mounting	/L	1	C.2
7	964 375 049 01	engine mounting	/L	1	C.4/COUPE
7	965 375 049 00	engine mounting	/L	1	C.4/TARGA/ C.4/CABRIO
7	964 375 050 00	engine mounting	/R	1	C.2
7	964 375 050 01	engine mounting	/R	1	C.4/COUPE
7	965 375 050 00	engine mounting	/R	1	C.4/TARGA/ C.4/CABRIO
7A	964 375 043 81	engine mounting		2	RS
7B	901 305 311 00	seat		4	RS
7C	900 082 030 02	hexagon-head bolt M 12 X 1,5 X 105		2	RS
7D	999 025 074 02	washer 12,4 X 34 X 5		4	RS
8	964 375 110 00	washer		4	C2/4
8A	999 025 134 02	washer 8,4 X 21 X 3		4	RS
9	900 074 134 02	hexagon-head bolt M 8 X 45		4	
10	900 380 009 09	hexagon nut V M 12 X 1,5		2	
		TURBO			
11	930 115 012 01	engine carrier		1	

Pos	Part Number	Name	Remarks	Qty	Model
12	930 115 017 10	motor console	-92	1	
12	A 964 115 017 20	motor console	93-	1	
13	900 075 040 02	hexagon-head bolt M 10 X 20		4	
14	900 025 008 09	washer A 10,5		8	
15	N 021 130 3	lock nut M 10		4	
16	N 010 450 5	hexagon-head bolt M 10 X 50		2	
17	N 010 472 4	hexagon-head bolt M 10 X 85		1	
18	N 011 010 6	hexagon nut M 10		1	
19	965 375 049 00	engine mounting	/L	1	
19	965 375 050 00	engine mounting	/R	1	
20	964 375 110 00	washer		4	
21	900 074 134 02	hexagon-head bolt M 8 X 45		4	
22	900 380 009 09	hexagon nut V M 12 X 1,5		2	
		- -- E N D -- -			

Model	Year	MG	SG	Illustration	Restrictions	Update		
964	94	1	98	REP		194	9:48	25.11.2005

Pos	Part Number	Name	Remarks	Qty	Model
		set of seals repair kits			
>>	> 964 100 902 00	set of seals cylinder cylinder head comprising:		1	M64.01/02/03
-	999 707 152 40	o-ring 102 X 2		6	
-	964 104 111 06	valve stem seal		12	
-	000 043 204 48	sleeve		2	
-	993 105 193 00	gasket		2	
-	964 105 177 03	gasket		2	
-	964 105 181 01	gasket		1	
-	964 105 181 01	gasket		1	
-	999 701 909 40	o-ring 6,7 X 3,53		6	
-	999 707 288 40	sealing ring 6 X 2,5		2	
-	964 105 140 01	thrust ring		18	
-	900 076 010 02	hexagon nut M 6		34	
-	964 105 173 01	gasket		6	
-	964 105 135 01	gasket		2	
-	999 707 313 40	o-ring 67,2 X 5,77		2	
-	900 123 131 30	sealing ring A 16 X 20		4	
-	930 105 197 05	gasket		2	
-	993 110 713 01	sealing ring		6	
-	999 707 293 40	o-ring 40 X 4		1	
-	999 113 463 40	shaft seal A 30 X 42 X 7		1	
-	993 111 195 00	sealing ring		6	
-	964 111 192 05	gasket		1	
-	964 111 198 00	gasket		1	

Model	Year	MG	SG	Illustration	Restrictions	Update		
964	94	1	98	REP		194	9:48	25.11.2005

Pos	Part Number	Name	Remarks	Qty	Model
-	999 707 112 40	round seal 25 X 6		8	
-	964 104 115 20	cylinder head gasket		6	
-	999 084 094 02	lock nut M 6		26	
-	999 084 052 02	lock nut M 8		14	
>>	> 930 100 908 03	set of seals cylinder cylinder head comprising:		1	M30.69
-	999 707 112 40	round seal 25 X 6		8	
-	999 704 172 50	sealing ring 16,3 X 22		2	
-	999 707 152 40	o-ring 102 X 2		6	
-	930 104 381 01	cylinder head gasket		6	
-	928 104 193 12	valve stem seal		12	
-	000 043 204 48	sleeve		2	
-	930 105 193 06	gasket		2	
-	930 105 191 03	gasket		1	
-	930 105 192 04	gasket		1	
-	900 123 007 30	sealing ring A 14 X 18		4	
-	900 910 012 02	hexagon nut M 6		19	
-	930 105 194 04	gasket		2	
-	930 105 195 07	gasket		2	
-	900 031 014 30	washer 8,4		40	
-	900 084 004 02	hexagon nut M 8		40	
-	900 123 005 00	sealing ring A 12 X 16		4	
-	900 123 043 30	sealing ring A 12 X 15,5		6	
-	900 123 066 30	sealing ring A 10 X 16		8	

Model	Year	MG	SG	Illustration	Restrictions	Update		
964	94	1	98	REP		194	9:48	25.11.2005

Pos	Part Number	Name	Remarks	Qty	Model
-	999 701 690 40	round seal 12 X 1,78		8	
-	930 105 197 05	gasket		2	
-	999 701 468 40	round seal 67,5 X 75,4 X 4		3	
-	900 123 115 30	sealing ring A 8 X 11,5		17	
-	930 106 407 01	grommet		1	
-	930 106 175 00	rubber sleeve		3	
-	930 106 176 00	rubber sleeve		1	
-	930 110 122 00	sealing ring		1	
-	930 110 197 10	gasket		12	
-	999 701 477 40	round seal 71,2 X 5,7		1	
-	999 701 395 50	o-ring 7 X 2		1	
-	900 123 018 30	sealing ring A 16 X 20		3	
-	900 123 144 30	sealing ring A 10 X 13,5		20	
-	900 123 101 30	sealing ring A 12 X 18		2	
-	930 110 394 00	gasket		1	
-	900 123 116 30	sealing ring A 12 X 15,5		1	
-	900 123 140 30	sealing ring 8 X 22		1	
-	930 107 123 01	gasket		1	
-	930 107 116 01	gasket		1	
-	900 123 055 30	sealing ring A 12 X 17		1	
-	999 707 289 40	round seal 47 X 2		1	
-	999 113 246 40	radial sealing ring A 10 X 18 X 6		1	
-	930 105 197 05	gasket		2	
-	999 707 293 40	o-ring 40 X 4		1	

Model	Year	MG	SG	Illustration	Restrictions	Update		
964	94	1	98	REP		194	9:48	25.11.2005

Pos	Part Number	Name	Remarks	Qty	Model
-	999 113 463 40	shaft seal A 30 X 42 X 7		1	
-	900 123 060 30	sealing ring A 24 X 29		4	
-	900 123 033 20	sealing ring A 10 X 13,5 C4		6	
-	999 113 464 40	sealing ring 35 X 45 X 7		1	
-	930 111 223 00	sealing ring		6	
-	930 111 192 06	gasket		2	
-	930 111 193 07	gasket		1	
-	930 123 194 06	gasket		2	
-	930 123 192 05	gasket		1	
-	900 123 050 20	sealing ring 8 X 11,5		1	
-	900 083 080 00	hexagon-head bolt M 8 X 1		1	
-	930 123 191 05	sealing ring		2	
>>	> 964 100 908 00	set of seals cylinder cylinder head comprising:		1	M64.50
-	999 707 112 40	round seal 25 X 6		8	
-	999 704 172 50	sealing ring 16,3 X 22		2	
-	999 707 152 40	o-ring 102 X 2		6	
-	000 043 204 48	sleeve		2	
-	930 105 195 07	gasket		2	
-	900 031 014 30	washer 8,4		22	
-	900 084 004 02	hexagon nut M 8		22	
-	900 123 043 30	sealing ring A 12 X 15,5		4	
-	930 105 197 05	gasket		2	
-	900 123 115 30	sealing ring A 8 X 11,5		15	

Model	Year	MG	SG	Illustration	Restrictions	Update		
964	94	1	98	REP		194	9:48	25.11.2005

Pos	Part Number	Name	Remarks	Qty	Model
-	930 106 407 01	grommet		1	
-	930 106 175 00	rubber sleeve		3	
-	930 106 176 00	rubber sleeve		1	
-	930 110 122 00	sealing ring		1	
-	930 110 197 10	gasket		12	
-	999 701 477 40	round seal 71,2 X 5,7		1	
-	999 701 395 50	o-ring 7 X 2		1	
-	900 123 018 30	sealing ring A 16 X 20		3	
-	900 123 144 30	sealing ring A 10 X 13,5		20	
-	900 123 101 30	sealing ring A 12 X 18		2	
-	930 110 394 00	gasket		1	
-	900 123 116 30	sealing ring A 12 X 15,5		1	
-	900 123 140 30	sealing ring A 8 X 22		1	
-	930 107 123 01	gasket		1	
-	930 107 116 01	gasket		1	
-	900 123 055 30	sealing ring A 12 X 17		1	
-	999 707 289 40	round seal 47 X 2		1	
-	999 113 246 40	radial sealing ring A 10 X 18 X 6		1	
-	999 707 293 40	o-ring 40 X 4		1	
-	999 113 463 40	shaft seal A 30 X 42 X 7		1	
-	900 123 060 30	sealing ring A 24 X 29		4	
-	900 123 033 20	sealing ring A 10 X 13,5		6	
-	999 113 464 40	sealing ring 35 X 45 X 7		1	

Model	Year	MG	SG	Illustration	Restrictions	Update		
964	94	1	98	REP		194	9:48	25.11.2005

Pos	Part Number	Name	Remarks	Qty	Model
-	930 111 223 00	sealing ring		6	
-	930 111 192 06	gasket		2	
-	930 111 193 07	gasket		1	
-	930 123 194 06	gasket		2	
-	930 123 192 05	gasket		1	
-	900 123 050 20	sealing ring 8 X 11,5		1	
-	900 083 080 00	hexagon-head bolt 8 X 1		1	
-	930 123 191 05	sealing ring		2	
-	964 104 115 20	sealing ring		6	
-	964 104 111 06	valve stem seal		12	
-	993 105 193 00	gasket		2	
-	964 105 177 03	gasket		2	
-	999 084 094 02	lock nut M 6		26	
-	999 084 095 02	lock nut M 8		10	
-	964 105 181 01	gasket		1	
-	964 105 181 01	gasket		1	
-	964 105 140 01	thrust ring		18	
-	999 701 909 40	o-ring 6,7 X 3,53		6	
-	999 707 288 40	o-ring 6 X 2,5		2	
-	964 105 173 01	gasket		6	
-	999 707 313 40	gasket 67,2 X 5,77		2	
>>	> 964 100 903 00	set of seals crankcase		1	M64.01/02/03
>>	> 930 100 901 04	set of seals crankcase comprising:		1	
-	999 704 172 50	sealing ring 16,3 X 22		3	
-	999 701 006 40	o-ring 8 X 2		26	

Model	Year	MG	SG	Illustration	Restrictions	Update		
964	94	1	98	REP		194	9:48	25.11.2005

Pos	Part Number	Name	Remarks	Qty	Model
-	999 113 426 41	shaft seal 90 X 110 X 11		1	
-	900 123 118 30	sealing ring A 22 X 27		1	
-	999 113 290 41	sealing ring 30 X 50 X 8		1	
-	999 707 285 40	o-ring 51 X 4,5		1	
-	900 123 141 30	sealing ring A 25 X 30		1	
-	900 123 140 30	sealing ring A 18 X 22		1	
-	999 704 173 50	sealing ring 19,5 X 26		1	
-	999 701 053 40	o-ring 39,2 X 3		1	
-	900 123 106 30	sealing ring A 18 X 24		2	
-	930 107 791 02	gasket		1	
-	911 602 102 01	sealing ring		1	
-	900 123 007 30	sealing ring A 14 X 18		2	
-	999 701 658 40	round seal 33,3 X 2,4		1	
-	900 031 011 30	washer 6,4		3	
-	999 084 095 02	lock nut M 8		26	
-	900 025 007 02	washer A 8,4		25	
-	930 101 391 01	gasket		2	
-	901 102 191 00	sealing ring		1	
-	930 105 198 01	gasket		1	
-	900 123 005 00	sealing ring A 12 X 16		4	
-	900 123 009 20	sealing ring A 18 X 24		1	
-	900 123 011 20	sealing ring A 22 X 27		1	

Model	Year	MG	SG	Illustration	Restrictions	Update		
964	94	1	98	REP		194	9:48	25.11.2005

Pos	Part Number	Name	Remarks	Qty	Model
-	900 123 066 30	sealing ring A 10 X 16		8	
>>	> 964 105 902 00	set of seals for valve cover comprising:		1	M64.01/02/03
-	964 105 135 01	gasket		2	
-	964 111 198 00	gasket		1	
-	964 105 173 01	gasket		6	
-	900 074 282 02	hexagon-head bolt M 8 X 37		4	
-	999 084 052 02	lock nut M 8		6	
-	900 074 339 02	hexagon-head bolt M 8 X 70		2	
-	999 025 125 09	washer 8,4 X 17 X 3,1		4	
>>	> 930 105 902 01	set of seals for valve cover comprising:		1	M30.69
-	930 105 194 04	gasket		2	
-	930 105 195 07	gasket		2	
-	900 031 014 30	washer 8,4		34	
-	900 084 004 02	hexagon nut M 8		34	
-	930 123 194 06	gasket		1	
-	900 910 097 02	lock nut M 8		4	
-	900 123 043 30	sealing ring A 12 X 15,5		4	
-	999 084 095 02	lock nut M8		2	
>>	> 964 105 902 01	set of seals for valve cover comprising:		1	M64.50
-	964 105 173 01	gasket		6	
-	930 105 195 07	gasket		2	

Model	Year	MG	SG	Illustration	Restrictions	Update		
964	94	1	98	REP		194	9:48	25.11.2005

Pos	Part Number	Name	Remarks	Qty	Model
-	930 123 194 06	gasket		1	
-	900 084 004 02	hexagon nut M 8		22	
-	900 910 097 02	lock nut M 8		4	
-	999 025 125 09	washer 8,4 X 17 X 3,1		2	
-	900 074 339 02	hexagon-head bolt M 8 X 70		1	
-	999 084 052 02	lock nut M 8		1	
>>	> 964 104 901 00	set of seals for valve stem seal comprising:		1	M64.01/02/03 M64.50
-	964 104 111 06	valve stem seal		12	
-	000 043 204 48	sleeve		2	
>>	> 964 100 956 00	maintenance set for periodic maintenance comprising:		1	M64.01/02/03
-	930 107 764 01	oil filter		1	
-	964 105 173 01	gasket		6	
-	964 105 135 01	gasket		2	
-	964 110 327 01	air cleaner cartridge		1	
-	964 111 198 00	gasket		1	
-	999 170 183 90	spark plug		12	
-	900 074 282 02	hexagon-head bolt		4	
-	999 084 052 02	lock nut		6	
-	900 123 118 30	sealing ring A 22 X 27		2	
-	900 074 339 02	hexagon-head bolt M 8 X 70		2	
>>	> 964 100 956 01	maintenance set for periodic maintenance comprising:		1	M64.01/02/03
-	930 107 764 01	oil filter		1	
-	964 105 173 01	gasket		6	

Model	Year	MG	SG	Illustration	Restrictions	Update		
964	94	1	98	REP		194	9:48	25.11.2005

Pos	Part Number	Name	Remarks	Qty	Model
-	964 105 135 01	gasket		2	
-	964 110 327 01	air cleaner cartridge		1	
-	964 111 198 00	gasket		1	
-	900 074 282 02	hexagon-head bolt		4	
-	999 084 052 02	lock nut		6	
-	900 123 118 30	sealing ring A 22 X 27		2	
-	900 074 339 02	hexagon-head bolt M 8 X 70		2	
>>	> 911 100 988 03	maintenance set for periodic maintenance 20 000 KM 12 000 MLS for M64.50 use also: 964 105 173 01 comprising:		1 6	M30.69 M64.50
-	944 107 201 03	oil filter		1	
-	930 105 194 04	gasket		2	
-	930 105 195 07	gasket		2	
-	930 123 194 06	gasket		1	
-	N 043 813 3	sealing ring 8 X 11,5		1	
-	900 123 060 30	sealing ring A 24 X 29		2	
-	900 084 004 02	hexagon nut M 8		34	
-	900 031 014 30	washer 8,4		34	
-	900 910 097 02	lock nut M 8		4	
-	900 123 118 30	sealing ring A 22 X 27		2	
-	999 084 095 02	lock nut M 8		2	
-	999 701 477 40	round seal 71,2 X 5,7		1	

Model	Year	MG	SG	Illustration	Restrictions	Update		
964	94	1	98	REP		194	9:48	25.11.2005

Pos	Part Number	Name	Remarks	Qty	Model
-	900 123 043 30	sealing ring A 12 X 15,5		4	
>>	> 000 043 202 59	subsequent installation FUER AU		1	M64.01/02/03 (D)
>>	> 930 107 040 01	repair kit oil tube divided comprising: oil tube oil tube		1 1 1	
-	900 041 013 01	circlip		1	
-	999 707 112 40	round seal 25 X 6		2	
-	999 707 113 40	round seal 20,22 X 3,53		2	
>>	> 964 103 925 00	set of piston rings MAHLE		1	
>>	> 964 101 901 00	set of crankshaft bearings comprising:		1	
-	930 101 131 15	bearing shell I		2	
-	930 101 132 15	bearing shell II-VII		12	
-	964 101 138 01	bearing sleeve VIII		1	
>>	> 964 101 901 51	set of crankshaft bearings oversize inner 0,25 MM comprising:		1	
-	930 101 131 51	bearing shell I		2	
-	930 101 132 51	bearing shell II-VII		12	
-	964 101 138 54	bearing sleeve VIII		1	
>>	> 964 101 901 56	set of crankshaft bearings oversize inner 0,50 MM comprising:		1	
-	930 101 131 56	bearing shell I		2	

Model	Year	MG	SG	Illustration	Restrictions	Update		
964	94	1	98	REP		194	9:48	25.11.2005

Pos	Part Number	Name	Remarks	Qty	Model
-	930 101 132 56	bearing shell II-VII		12	
-	964 101 138 55	bearing sleeve VIII		1	
>>	> 964 101 901 61	set of crankshaft bearings oversize outer 0,25 MM comprising:		1	
-	930 101 131 61	bearing shell I		2	
-	930 101 132 61	bearing shell II-VII		12	
-	964 101 138 65	bearing sleeve VIII		1	
>>	> 964 101 901 71	set of crankshaft bearings oversize inner 0,25 MM oversize outer 0,25 MM comprising:		1	
-	930 101 131 71	bearing shell I		2	
-	930 101 132 71	bearing shell II-VII		12	
-	964 101 138 66	bearing sleeve VIII		1	
>>	> 964 101 901 76	set of crankshaft bearings oversize inner 0,50 MM oversize outer 0,25 MM comprising:		1	
-	930 101 131 76	bearing shell I		2	
-	930 101 132 76	bearing shell II-VII		12	
-	964 101 138 67	bearing sleeve VIII		1	
		- -- E N D -- -			

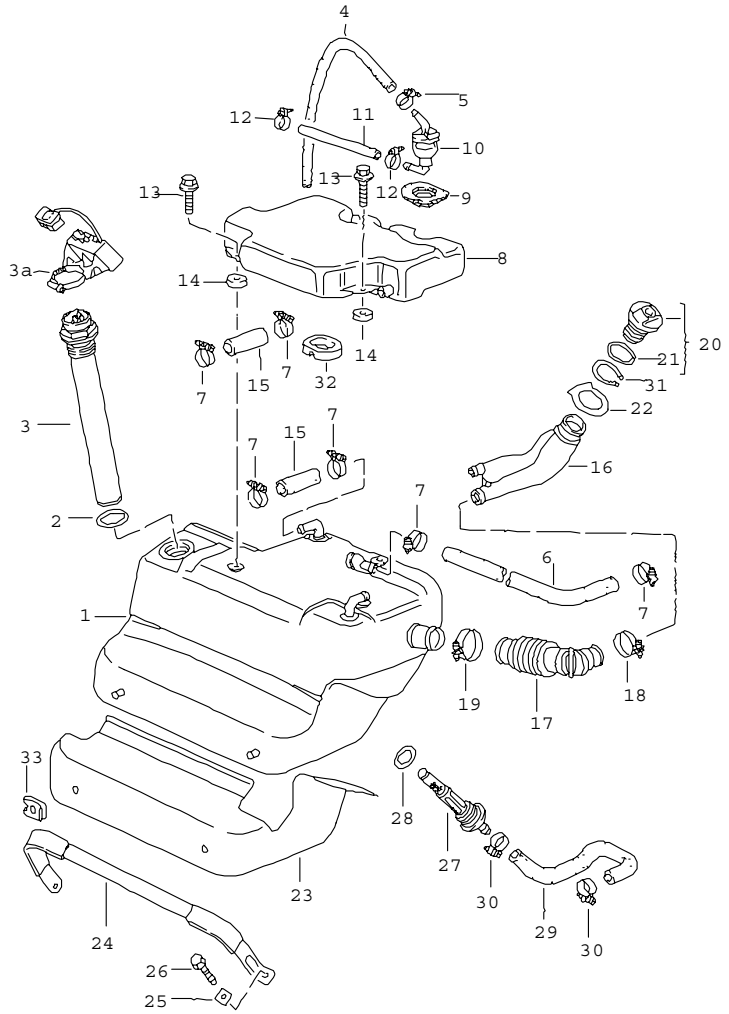

Pos	Part Number	Name	Remarks	Qty	Model
		fuel tank			
1	A 964 201 021 00	fuel tank	/LL -91	1	
1	964 201 921 00	fuel tank F >>96NS4 00189 F >>96NS4 20103 F >>96NS4 30088 F >>96NS4 40085 F >>96NS4 50121 F >>96NS4 60157 F >>96NS4 70079 F >>96NS4 80166	/LL -91	1	
1	A 964 201 021 02	fuel tank F 96NS4 00190>> F 96NS4 20104>> F 96NS4 30089>> F 96NS4 40086>> F 96NS4 50122>> F 96NS4 60158>> F 96NS4 70080>> F 96NS4 80167>>	/LL -92	1	
1	993 201 021 00	fuel tank F 96NS4 00190>> F 96NS4 20104>> F 96NS4 30089>> F 96NS4 40086>> F 96NS4 50122>> F 96NS4 60158>> F 96NS4 70080>> F 96NS4 80167>>	/LL 93-	1	
1	964 201 021 03	fuel tank 92L	/LL 92- 93-	1	CARRERA RS M 545
(1)	A 964 201 022 00	fuel tank	/RL -91	1	
(1)	964 201 022 01	fuel tank	/RL -92	1	
(1)	993 201 022 00	fuel tank	/RL 93-	1	
2	999 707 115 40	o-ring 44 X 4		1	
3	A 964 641 801 01	tank gauge		1	
3	964 641 801 02	tank gauge		1	
3A	964 641 081 00	control unit		1	
4	964 201 143 01	connecting hose		1	
5	N 023 569 2	hose clamp 16 X 9		1	
6	964 201 415 00	hose		1	

Pos	Part Number	Name	Remarks	Qty	Model
7	999 512 237 02	hose clamp 26 X 9		6	
8	964 201 077 04	expansion tank		1	
8	964 201 077 03	expansion tank	92- 93-	1	CARRERA RS M 545
9	964 201 375 00	grommet		1	
10	964 201 175 01	shut-off valve		1	
-	000 043 205 02	hose 9,5 X 15,5		X	
11	-	180 MM		1	
(11)	964 201 545 02	fuel hose	92- 93-	1	CARRERA RS M 545
12	999 512 525 00	hose clamp 14 X 9		2	
13	900 075 335 02	screw M 6 X 22		3	
14	999 703 362 40	sleeve		3	
-	000 043 205 03	hose 20 X 26		X	
15	-	80 MM		2	
15	-	125 MM	92- 93-	1	CARRERA RS M 545
16	A 964 201 043 00	filler neck	-91	1	M 150
16	964 201 043 02	filler neck	-91	1	M 150/M193
16	964 201 043 07	filler neck	92-	1	M 150/M193
16	A 964 201 043 01	filler neck	-91	1	
16	964 201 043 03	filler neck	-91	1	
16	964 201 043 06	filler neck	92-	1	
17	A 964 201 181 00	bellows	89	1	
(17)	A 964 201 287 02	hose	-91	1	
(17)	964 201 987 00	hose	-91	1	
(17)	964 201 287 03	hose	92-	1	
18	999 512 499 00	hose clamp 32 - 50	-91	1	
18	999 512 195 02	hose clamp 39 X 9	92-	1	
19	999 512 348 02	hose clamp 40 - 60	-91	1	
19	999 512 322 02	hose clamp 44 X 7	92-	1	
20	993 201 271 00	fuel tank cap		1	COUPE
20	964 201 906 00	fuel tank cap lockable w/o stipulated lock number with keys		1 2	TARGA CABRIO
20	964 201 906 01	fuel tank cap lockable state lock number with keys		1 2	TARGA CABRIO
21	944 201 553 00	gasket		1	
22	964 201 301 00	desk pad		1	
23	964 201 331 04	protection cap	/LL	1	
23	993 201 331 00	protection cap	/LL 93-	1	M 545
(23)	964 201 332 00	protection cap	/RL -90	1	
(23)	964 201 332 02	protection cap	/RL 91-	1	
24	964 201 103 00	restraining strap		1	
24	964 201 103 02	restraining strap	92- 93-	1	CARRERA RS M 545
25	964 201 387 00	plate		1	
26	900 075 414 08	hexagon-head bolt M 8 X 40		1	
27	928 201 081 04	fuel filter		1	
28	928 201 187 02	sealing ring		1	
29	964 201 581 01	suction hose	/LL -91	1	
29	964 201 581 03	suction hose	/LL 92-	1	
(29)	964 201 582 00	suction hose	/RL -91	1	
(29)	964 201 582 02	suction hose	/RL 92-	1	
30	N 023 565 3	hose clamp 21 X 9ZV		2	

Pos	Part Number	Name	Remarks	Qty	Model	Pos	Part Number	Name	Remarks	Qty	Model
31	999 041 039 09	snap ring 57 X 2		1							
32	964 201 376 00	spacer rubber		1							
33	N 012 653 3	lock washer 9		2							
-	964 201 153 00	overflow hose for filler neck		1							
		- -- E N D -- -									

Model	Year	MG	SG	Illustration	Restrictions	Update			
964	94	2	01	201-05		194	17:37	24.11.2005	PORSCHE PET PORSCHE

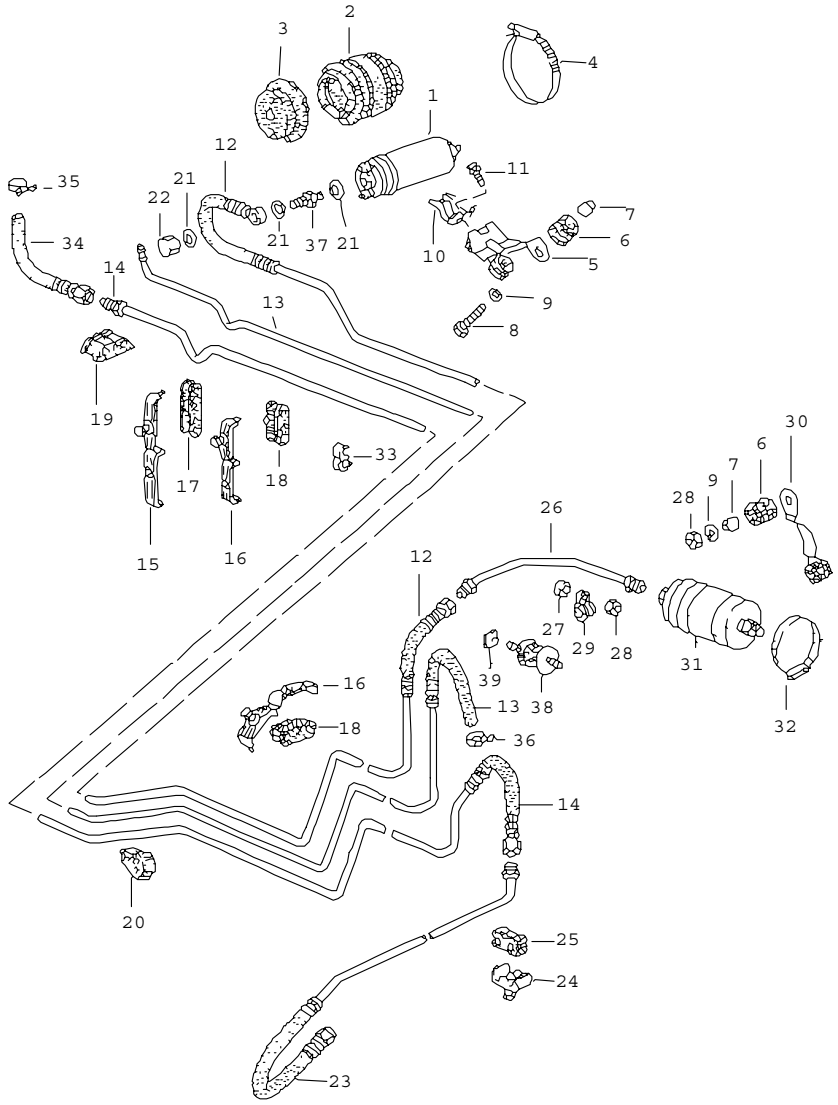

Pos	Part Number	Name	Remarks	Qty	Model
		fuel system			
1	964 620 104 00	fuel pump		1	M64.01/02/03
1	911 608 102 02	fuel pump		1	M30.69 M64.50
2	965 356 391 01	housing		1	
3	965 356 389 00	cap		1	
4	999 512 397 00	hose clamp 80-100		1	
5	964 356 249 02	support	-91	1	
5	964 356 249 03	support	92-	1	
6	964 356 635 00	rubber mounting		5	
7	928 355 633 00	bush		5	
8	900 075 407 02	hexagon-head bolt M 6 X 30		3	
9	900 151 003 02	washer A 6,4		5	
10	964 201 577 00	bearing	-91	1	
10	964 201 577 01	bearing	92-	1	
11	900 075 393 02	screw M 6 X 12		1	
12	964 356 061 02	fuel line	/LL -91	1	
12	964 356 061 03	fuel line	/LL 92	1	
12	964 356 061 05	fuel line	/LL 93-	1	
(12)	964 356 062 01	fuel line	/RL -91	1	
(12)	964 356 062 03	fuel line	/RL 92-	1	
13	964 201 051 00	vent line	/LL	1	
(13)	964 201 052 00	vent line	/RL	1	
14	964 356 063 03	return line	/LL	1	
(14)	964 356 064 01	return line	/RL	1	
15	964 356 593 00	clamp	/LL	6	M 657
16	964 356 555 00	clamp	/RL	6	
17	964 356 595 00	rubber mounting	/LL	6	M 657

Pos	Part Number	Name	Remarks	Qty	Model
18	964 356 557 00	rubber mounting	/RL	6	
19	964 356 559 00	rubber mounting		1	
20	964 356 569 00	rubber mounting		1	
21	900 123 005 20	sealing ring A 12 X 16		2	
22	928 110 475 01	cap nut		1	
23	964 356 367 02	return line	/LL	1	
(23)	964 356 368 00	return line	/RL	1	
24	928 356 555 00	clamp		2	
25	928 356 525 01	rubber mounting		2	
26	964 356 065 01	pressure line	/LL	1	M64.01/02 M64.50
26	964 356 065 03	pressure line	/LL	1	M64.03
26	964 356 065 02	pressure line	/LL 93-	1	M 503
(26)	964 356 066 00	pressure line	/RL	1	
(26)	964 356 066 01	pressure line	/RL 93-	1	M 503
27	999 209 005 40	sleeve		1	
28	900 076 010 02	hexagon nut M 6		3	
29	999 511 116 02	clamp B 10 X 15		1	
29	999 511 105 02	clip D2 12-12 X 15		1	M30.69 M64.50
30	964 356 511 00	support		1	
31	928 110 253 04	fuel filter		1	M64.01/02/03 (AG)(SA)
31	928 110 253 06	fuel filter		1	M64.01/02/03
32	999 512 390 00	hose clamp 60-80/13		1	
33	964 356 521 00	dual clip		3	
34	964 356 583 00	return line	-91	1	
34	964 356 583 02	return line	LL 92-	1	
(34)	964 356 584 01	return line	RL 92-	1	
35	N 023 569 2	hose clamp AG 16 X 9 ZY		1	
36	999 512 301 02	hose clamp S 13/7		1	
37	964 620 951 00	retaining valve		1	M64.01/02/03
37	893 906 093	retaining valve		1	M30.69 M64.50
38	999 703 229 00	bonded rubber buffer		1	M 503
39	900 200 005 02	square nut M 6		1	M 503

- -- E N D -- -

Model	Year	MG	SG	Illustration	Restrictions	Update			
964	94	2	01	201-10		194	17:38	24.11.2005	PORSCHE PET PORSCHE

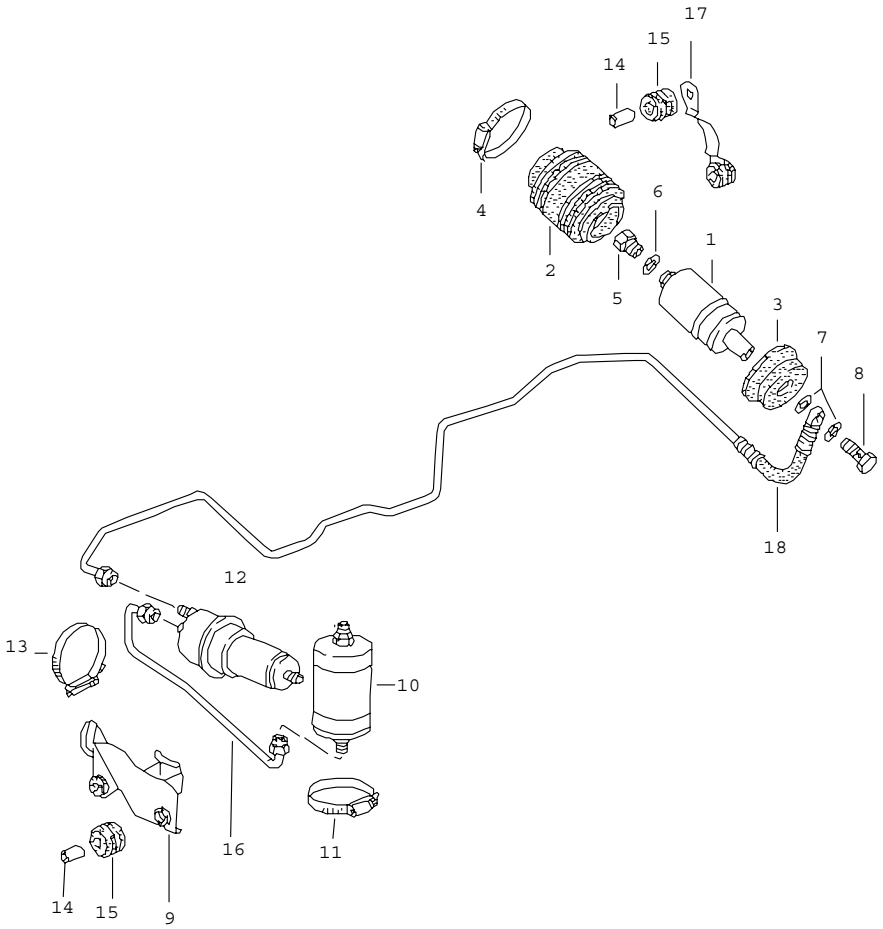

Pos	Part Number	Name	Remarks	Qty	Model
		fuel system rear			M30.69 M64.50
1	930 608 113 00	fuel pump		1	
2	965 356 391 01	housing		1	
3	965 356 389 00	cap		1	
4	999 512 397 00	hose clamp 80-100		1	
5	999 136 029 02	connection piece M 16 X 1,5		1	
6	900 123 008 30	sealing ring A 14 X 20		1	
7	900 123 005 20	sealing ring A 12 X 16		2	
8	900 175 020 02	banjo bolt M 12 X 24		1	
9	965 356 213 00	bracket		1	
10	928 110 147 11	fuel filter		1	
11	999 512 390 00	hose clamp 60-80		1	
12	911 110 197 02	fuel accumulator		1	
13	999 512 565 00	hose clamp 50 - 70/13		1	
14	928 355 633 00	bush		5	
15	964 356 635 00	rubber mounting		5	
16	965 356 393 00	fuel line		1	
17	964 356 511 00	support		1	
18	965 356 065 01	pressure line		1	
		- -- E N D -- -			

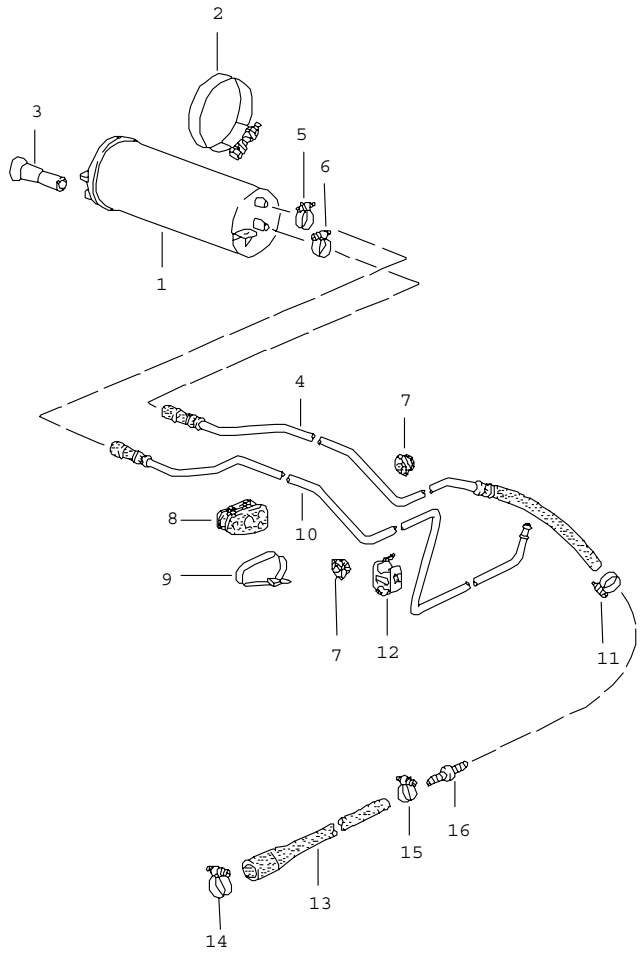

Pos	Part Number	Name	Remarks	Qty	Model
		carbon canister			
1	964 201 017 00	carbon canister	-91	1	
1	993 201 221 01	carbon canister	92-	1	
2	999 512 506 02	clip 106 X 25		1	
3	928 201 195 02	end piece		1	
4	964 201 131 00	vent line		1	
4	964 201 131 20	vent line	93-	1	M64.50
5	999 512 554 00	hose clamp A 18 X 9		1	
6	999 512 198 02	hose clamp 17 X 9		1	
7	999 702 084 50	rubber sleeve		2	
8	964 201 615 00	rubber mounting		1	
9	999 513 010 40	tie-wrap 9 X 250		1	
10	964 201 133 00	vent line	/LL	1	
(10)	964 201 123 00	vent line	/RL	1	
11	999 512 301 02	hose clamp S 13/7		1	
12	999 591 715 40	cable holder		1	
13	928 110 652 04	hose		1	
14	999 512 346 00	hose clamp 16 - 25		1	
15	999 512 427 02	hose clamp 8 - 16		1	
16	999 137 032 40	intermediate piece GS 6		1	
		- -- E N D -- -			

Model	Year	MG	SG	Illustration	Restrictions	Update				
964	94	2	02	202-00		194	17:38	24.11.2005	PORSCHE	PET	PORSCHE

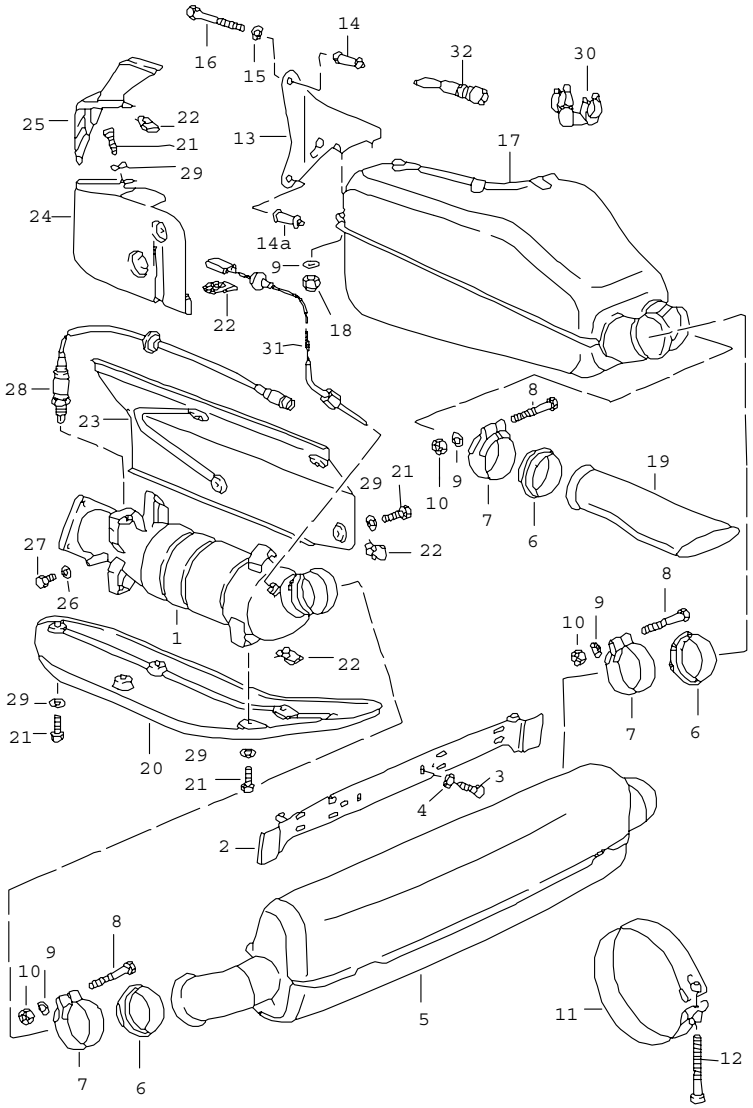

Pos	Part Number	Name	Remarks	Qty	Model
		exhaust system muffler catalytic converter			M64.01/02/03
1	964 111 042 05	front muffler		1	M 150
1	A 964 113 213 06	catalytic converter	-90	1	
1	U 964 113 213 10	catalytic converter		1	
1	964 113 213 16	catalytic converter		1	
1	A 964 113 213 08	catalytic converter	-90	1	(J)
1	U 964 113 213 11	catalytic converter		1	(J)
1	964 113 213 15	catalytic converter		1	(J)
2	964 111 144 01	bracket		1	
3	900 075 078 02	hexagon-head bolt M 8 X 15		2	
4	900 025 007 02	washer A 8,4		2	
5	964 111 045 04	muffler		1	
5	964 111 045 02	muffler		1	(CH)(AUS)
6	964 111 247 01	sealing ring		3	
7	964 111 336 00	clip		3	
8	900 074 339 02	hexagon-head bolt M 8 X 70		3	
9	999 025 125 09	washer 8,4 X 17 X 3,1		3	
10	999 084 052 02	lock nut M 8		2	
11	964 111 119 02	restraining strap		2	
12	900 067 309 00	pan-head screw M 8 X 80		2	
13	964 111 113 04	bracket		1	
14	964 111 213 01	spacer sleeve	-90 91-	2 1	
14A	964 111 213 02	spacer sleeve	91-	1	
15	900 223 001 02	washer 8,4		2	

Pos	Part Number	Name	Remarks	Qty	Model
16	900 074 311 08	hexagon-head bolt M 8 X 75		2	
17	964 111 046 05	rear muffler		1	
18	999 084 095 02	lock nut M 8		2	
19	964 111 249 03	tail pipe		1	
20	964 211 213 03	cover		1	
21	900 075 354 00	screw M 6 X 16		9	
22	999 507 073 00	nut lock M 6		9	
23	964 211 214 04	heat protection plate		1	
24	964 211 217 05	protective plate		1	
25	964 211 219 05	protective plate		1	
26	900 123 050 20	sealing ring 8 X 11,5		1	
27	900 083 080 00	hexagon-head bolt M 8 X 1		1	
28	965 606 126 01	oxygen sensor		1	
29	N 011 666 7	washer B 6,4		9	
30	999 591 758 40	support		1	
31	911 606 115 00	temperature sensor		1	(J)
32	911 612 422 00	adapter		1	
		- -- E N D -- -			

Pos	Part Number	Name	Remarks	Qty	Model

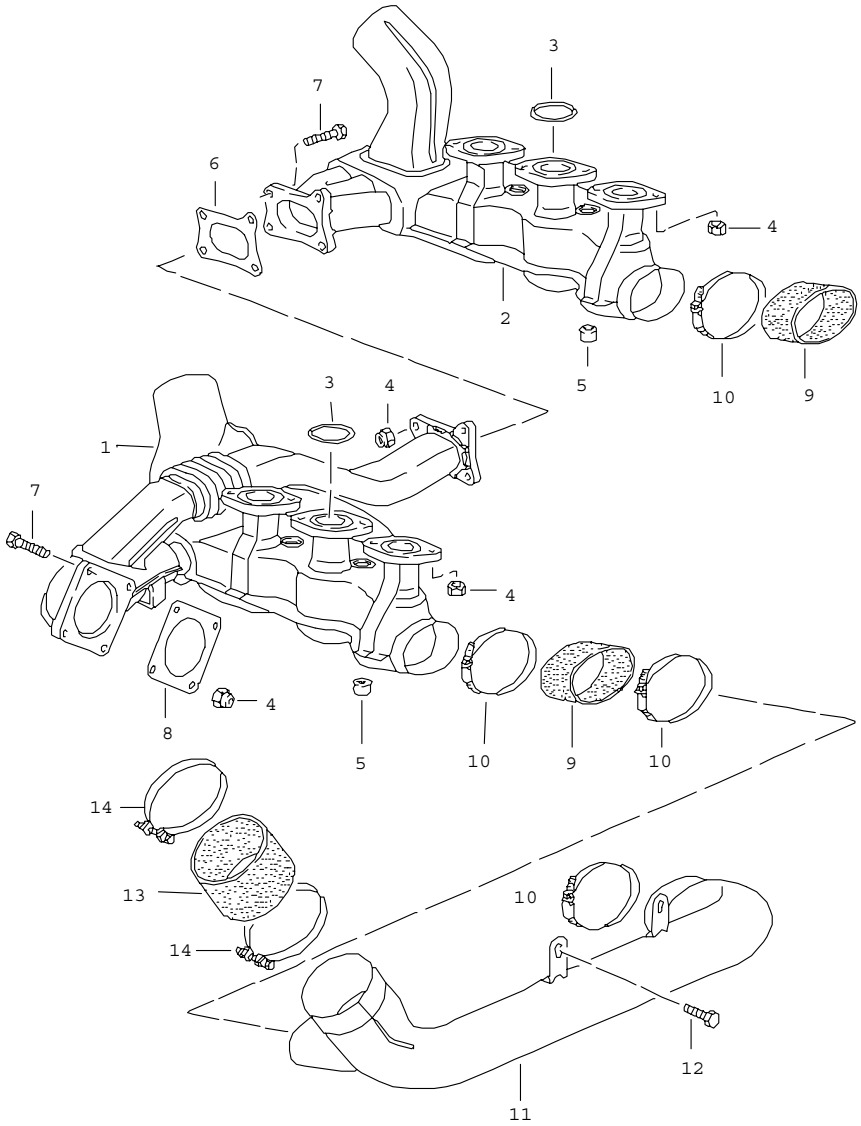

Pos	Part Number	Name	Remarks	Qty	Model
		exhaust system heat exchanger			M64.01/02/03
1	964 211 039 05	heat exchanger	/L	1	M64.01/03
1	964 211 039 32	heat exchanger	/L	1	M64.02
2	964 211 040 04	heat exchanger	/R	1	
3	993 111 195 00	sealing ring		6	
4	999 084 052 02	lock nut M 8		14	
5	999 085 001 02	socket head nut M 8		4	
6	964 111 192 05	gasket		1	
7	900 074 282 02	hexagon-head bolt M 8 X 37		4	
8	964 111 198 00	gasket		1	
9	964 211 339 00	rubber sleeve		2	
10	999 512 351 02	hose clamp 70 - 90		4	
11	964 211 336 01	air control tube		1	
12	900 075 392 00	screw M 6 X 18		2	
13	964 211 338 00	rubber sleeve		1	
14	999 512 539 00	hose clamp 90 - 110		2	
		- -- E N D -- -			

Model	Year	MG	SG	Illustration	Restrictions	Update				
964	94	2	02	202-10		194	17:38	24.11.2005	PORSCHE	PET	PORSCHE

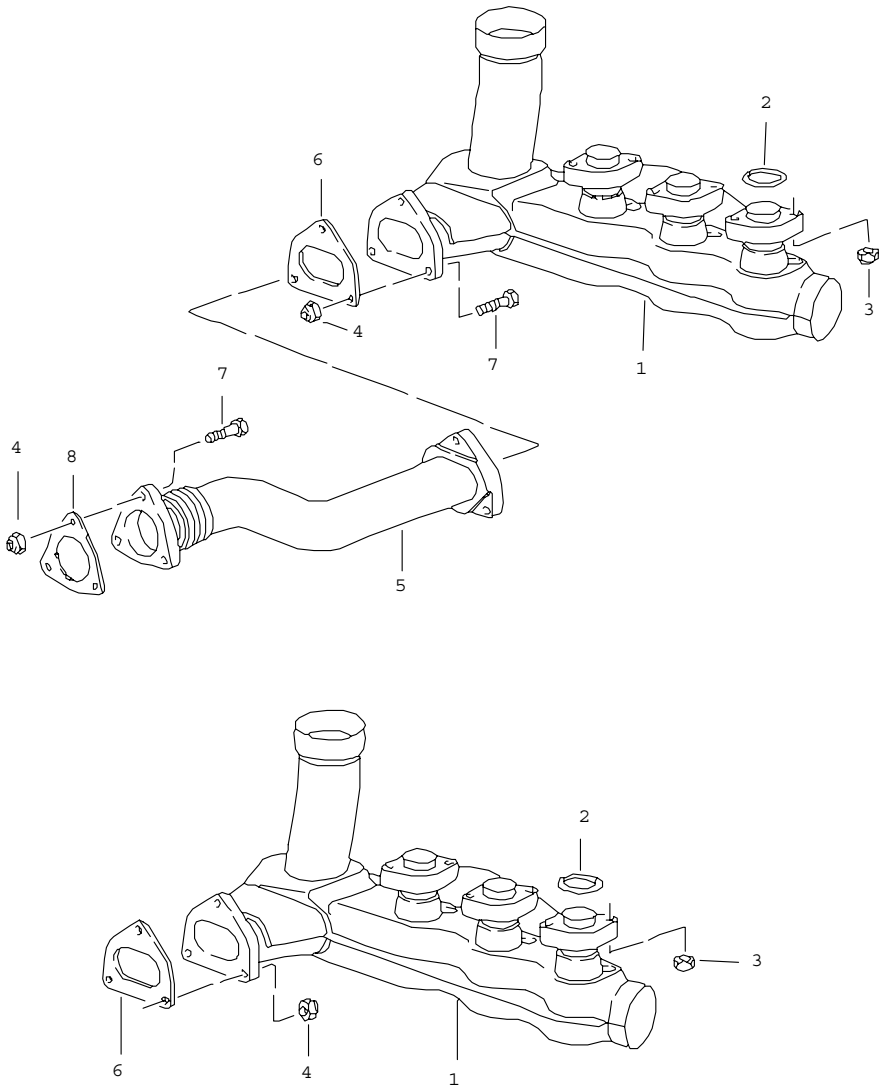

Pos	Part Number	Name	Remarks	Qty	Model
		heat exchanger			M30.69 M64.50
1	930 211 033 02	heat exchanger		2	
2	930 111 223 00	sealing ring		6	
3	999 084 625 02	lock nut V M 8		12	
4	900 910 097 02	lock nut M 8		9	
5	930 111 169 05	exhaust line		1	
6	930 111 192 06	gasket		2	
7	900 074 282 02	hexagon-head bolt M 8 X 37		9	
8	930 111 193 07	gasket		1	
		- -- E N D -- -			

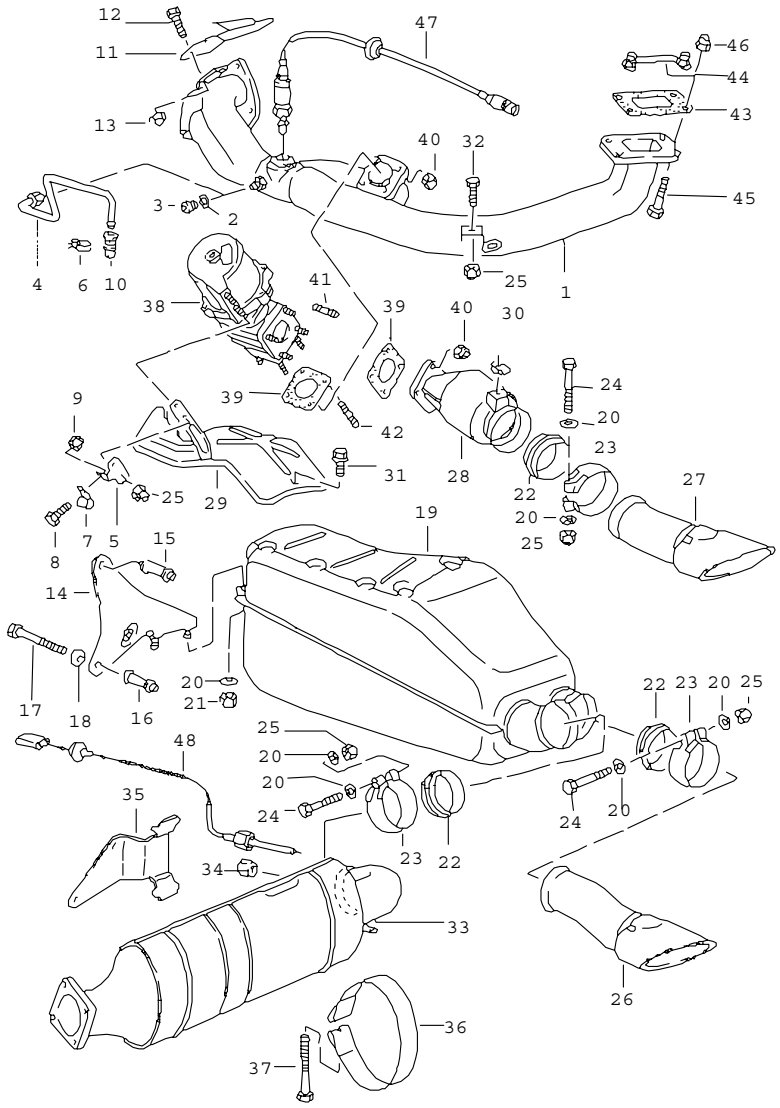

Pos	Part Number	Name	Remarks	Qty	Model
		exhaust system			M30.69 M64.50
1	930 111 003 06	exhaust line		1	
1	930 111 003 07	exhaust line		1	(CH)
2	900 123 050 20	sealing ring 8 X 11,5		1	
3	900 083 080 00	hexagon-head bolt M 8 X 1		1	
4	930 113 054 00	exhaust emission tube		1	(CH)
5	930 113 253 00	support		1	(CH)
6	999 512 554 00	hose clamp 12 - 22/9		1	(CH)
7	N 020 609 3	clip 8 X 15		1	(CH)
8	900 075 267 02	hexagon-head bolt M 6 X 14		1	(CH)
9	999 084 094 02	lock nut M 6		1	(CH)
10	034 133 335 D	cap		1	(CH)
11	930 111 128 03	cover plate		1	
12	900 075 312 02	hexagon-head bolt M 6 X 16		2	
13	900 910 096 02	lock nut M 6		2	
14	930 111 113 02	bracket		1	
15	964 111 213 01	spacer sleeve		1	
16	964 111 213 02	spacer sleeve		1	
17	900 074 311 08	hexagon-head bolt M 8 X 75		2	
18	900 223 001 02	washer 8,4		2	
19	964 111 046 05	rear muffler		1	
20	999 025 125 09	washer 8,4 X 17 X 3,1		2	
21	999 084 095 02	lock nut M 8		2	

Pos	Part Number	Name	Remarks	Qty	Model
22	964 111 247 01	sealing ring		3	
23	964 111 336 00	clip		3	
24	900 074 339 02	hexagon-head bolt M 8 X 70		3	
25	999 084 052 02	lock nut M 8		6	
26	930 111 252 01	tail pipe	/R	1	
27	930 111 251 03	tail pipe	/L	1	
28	930 123 064 00	catalytic converter		1	
29	930 123 731 00	cover plate		1	
30	A 999 507 359 00	nut lock M 6		1	
30	999 507 073 00	nut lock M 6		1	
31	900 075 354 00	screw M 6 X 16		1	
32	900 075 373 02	hexagon-head bolt M 8 X 12		1	
33	930 113 038 10	catalytic converter		1	
34	930 113 153 00	cap M 14 X 1,5		1	
35	930 113 221 00	bracket		1	
36	930 111 019 00	restraining strap		1	
37	900 067 309 00	pan-head screw M 8 X 80		1	
38	930 123 060 13	wastegate		1	M30.69
38	964 123 060 20	wastegate		1	M64.50
39	930 123 194 06	gasket		2	
40	900 910 097 02	lock nut M 8		8	
41	900 081 048 02	stud M 8 X 25		4	
42	900 081 049 02	stud M 8 X 32		4	
43	930 123 192 05	gasket		1	
44	930 123 114 02	supporting plate		1	
45	900 074 284 02	hexagon-head bolt M 10 X 40		4	
46	900 910 099 02	lock nut M 10		2	
47	965 606 126 01	oxygen sensor		1	
48	911 606 115 00	temperature sensor		1	(J)
		- -- E N D -- -			

Model	Year	MG	SG	Illustration	Restrictions	Update			
964	94	2	02	202-16		194	17:39	24.11.2005	PORSCHE PET PORSCHE

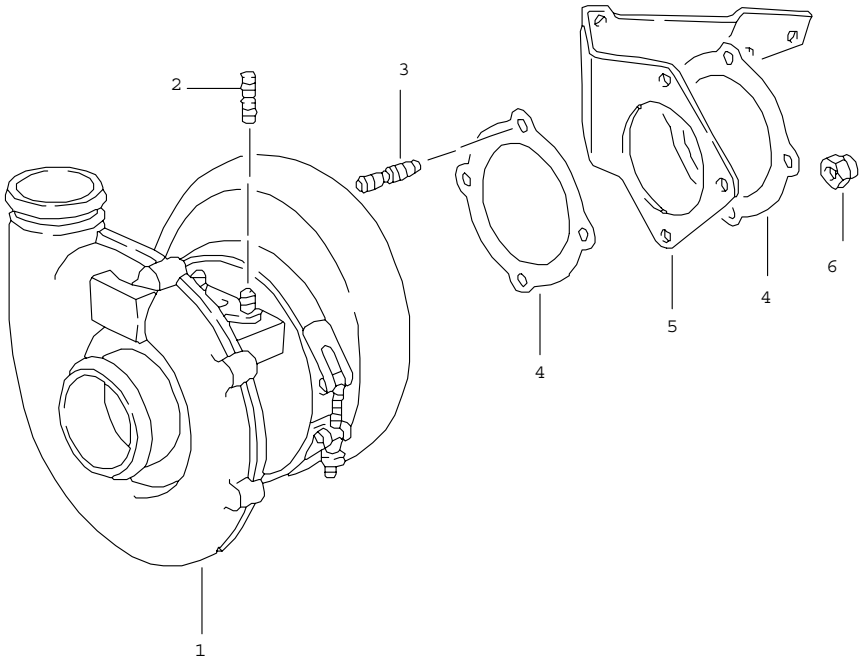

Pos	Part Number	Name	Remarks	Qty	Model
		turbocharger			M30.69 M64.50
1	> 930 123 003 02	turbocharger		1	
2	900 081 004 02	stud M 8 X 20		4	
3	900 081 051 02	stud M 10 X 35		4	
4	* 930 123 191 05	sealing ring		2	
5	930 123 121 05	bracket		1	
6	900 910 099 02	lock nut M 10		4	
		- -- E N D -- -			

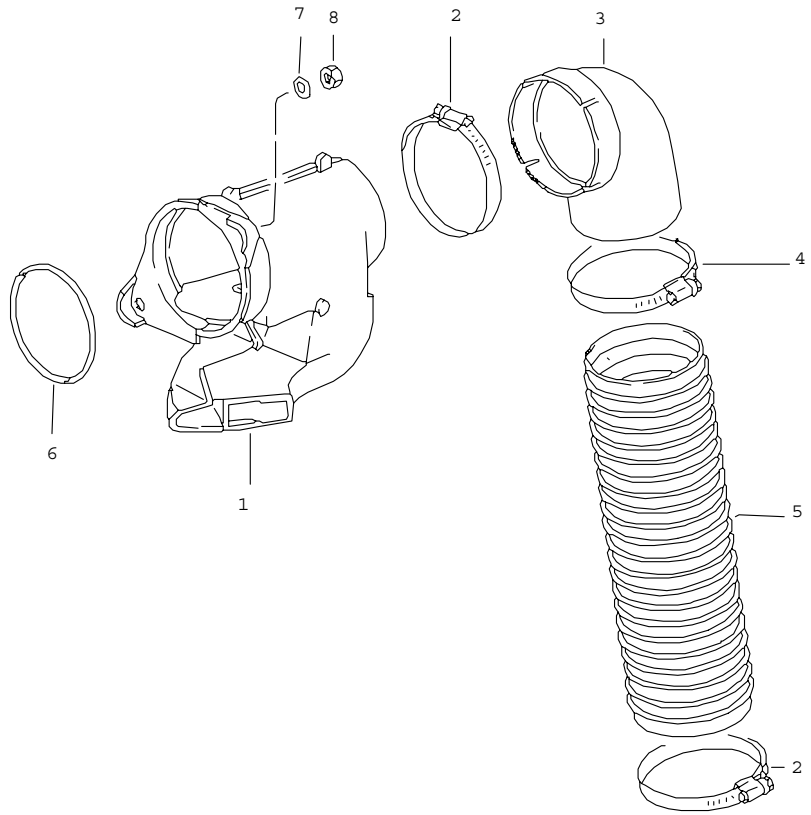

Pos	Part Number	Name	Remarks	Qty	Model
		heating air supply			
1	964 572 087 00	heat control box	/L	1	
(1)	964 572 068 00	heat control box	/R	1	
2	999 512 351 02	hose clamp 70-90		4	
3	964 572 187 00	elbow	/R	1	TURBO
4	999 512 553 00	clip 80 X 12		1	
5	964 572 785 00	connecting hose 320 MM		2	C2/C4
5	999 782 037 90	connecting hose 335 MM	/L	1	TURBO
5	999 782 039 90	connecting hose 270 MM	/R	1	TURBO
5	999 181 291 40	connecting hose 76 X 180	/R 92-	1	C2/C4
6	999 707 207 40	o-ring 75 X 5,3	-91	2	
6	999 707 176 40	o-ring 75 X 5,3	92-	2	
7	N 011 524 7	washer 6,4		4	
8	999 084 114 02	lock nut M6		4	
		- -- E N D -- -			

Model	Year	MG	SG	Illustration	Restrictions	Update		
964	94	2	98	REP		194	9:48	25.11.2005

Pos	Part Number	Name	Remarks	Qty	Model
		repair kits			
>>	> 964 113 911 00	reconstruction set for subsequent installat. catalytic converter comprising:		1	
-	964 113 213 06	catalytic converter		1	
-	964 111 247 01	sealing ring		1	
-	964 111 336 00	clip		1	
-	900 074 339 02	hexagon-head bolt M 8 X 70		1	
-	999 025 125 09	washer 8,4 X 17 X 3,1		1	
-	999 084 052 02	lock nut M 8		5	
-	900 074 282 02	hexagon-head bolt M 8 X 37		4	
-	965 606 126 01	oxygen sensor		1	
-	964 111 198 00	gasket		1	
-	964 201 043 01	filler neck		1	
-	928 110 429 08	vacuum valve		1	
-	964 110 543 01	hose		1	
-	928 110 652 05	hose		1	
-	944 605 240 01	bleeder valve		1	
-	964 110 544 02	hose		1	
-	999 702 181 40	grommet		2	
-	999 512 554 00	hose clamp LC 12-22		5	
-	964 110 685 03	rubber sleeve		1	
-	928 574 717 03	protective tube		1	
-	N 020 139 11	pipe 330 MM		1	
-	944 701 210 02	sticker		1	
-	911 701 241 00	sticker		1	
-	928 006 117 03	sticker		1	
-	000 043 141 00	installation instructions		1	

Model	Year	MG	SG	Illustration	Restrictions	Update		
964	94	2	98	REP		194	9:48	25.11.2005

Pos	Part Number	Name	Remarks	Qty	Model
-	900 075 057 02	hexagon-head bolt M 6 X 16		9	
-	999 507 326 02	captive nut M 6		9	
-	N 011 666 7	washer B 6,4		9	
		- -- E N D -- -			

Model	Year	MG	SG	Illustration	Restrictions	Update			
964	94	3	01	301-00		194	17:39	24.11.2005	PORSCHE PET PORSCHE

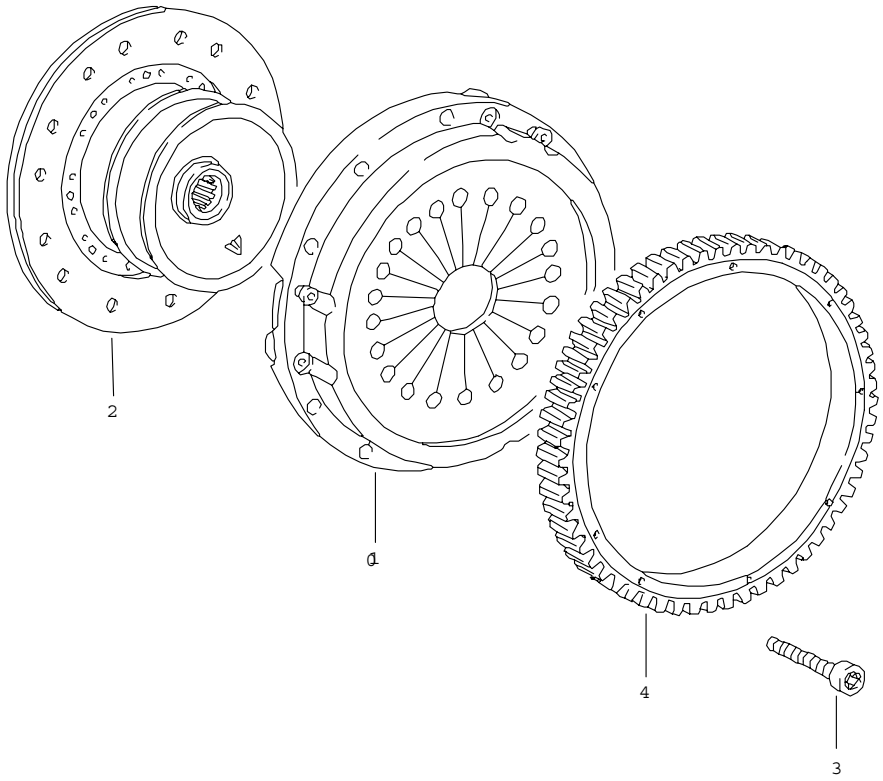

Pos	Part Number	Name	Remarks	Qty	Model
		clutch	89		
1	950 116 023 03	pressure plate		1	
2	950 116 012 52	drive plate		1	
3	900 067 045 02	pan-head screw M 8 X 80		9	
4	950 116 143 01	starter ring		1	
		- -- E N D -- -			

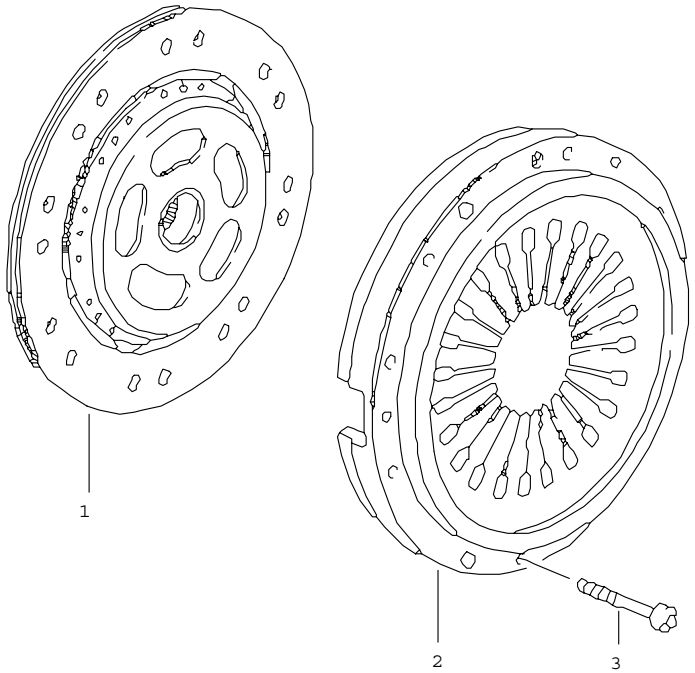

Pos	Part Number	Name	Remarks	Qty	Model
		clutch	90-		
1	A 964 116 013 90	drive plate alternative parts: 964.116.013.00 964.116.014.00	-91	1	M64.01
1	A 964 116 013 01	drive plate	92 92	1	M64.01 M64.03 M 002
1	964 116 011 30	drive plate	92	1	M64.03 CARRERA RS
1	964 116 013 50	drive plate	92	1	M30.69 M64.01/50 M64.03 M 002
2	A 964 116 027 00	pressure plate	-90	1	M64.01
2	964 116 027 90	pressure plate alternative parts: 964.116.027.01 964.116.028.00	-91	1	M64.01
2	964 116 028 90	pressure plate alternative parts: 964.116.027.02 964.116.028.02	92-	1	M64.01/03
2	964 116 028 91	pressure plate alternative parts: 964.116.027.52 964.116.028.52		1	M30.69
2	964 116 028 53	pressure plate		1	M64.50
3	999 510 015 02	pan-head screw M 8 X 40		9	
3	N 014 715 3	pan-head screw M 8 X 45		9	M64.03 CARRERA RS
-	964 116 911 00	repair kit for clutch	-91	1	M64.01
-	964 116 911 01	repair kit for clutch	92-	1	M64.01

- -- E N D -- -

Model	Year	MG	SG	Illustration	Restrictions	Update				
964	94	3	01	301-10		194	17:40	24.11.2005	PORSCHE	PET	PORSCHE

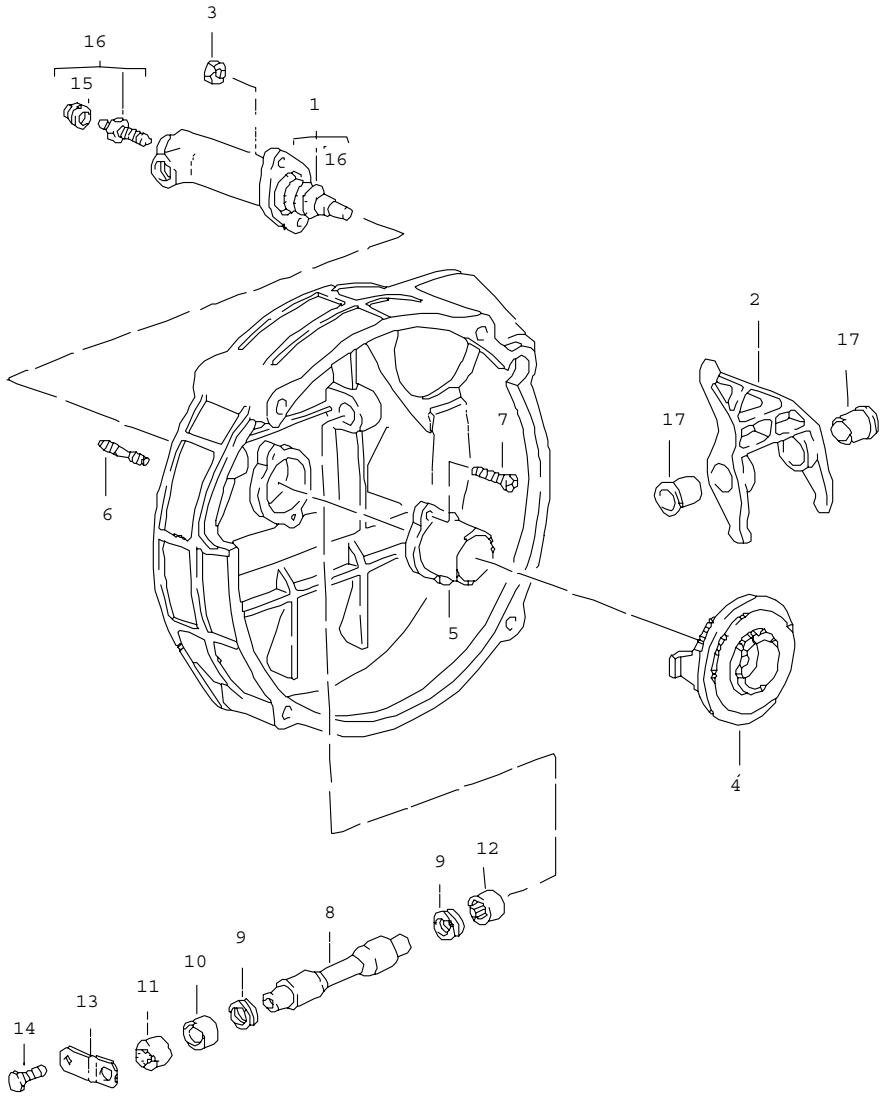

Pos	Part Number	Name	Remarks	Qty	Model
		clutch release			
1	950 116 237 12	clutch operating cylinder		1	
1	950 116 237 50	clutch operating cylinder		1	G50.52
2	950 116 086 06	release fork		1	
3	900 076 025 02	hexagon nut M8		2	
4	A 950 116 080 04	clutch release bearing	-89	1	
4	A 950 116 080 05	clutch release bearing	-92	1	
4	A 950 116 080 07	clutch release bearing	-92	1	
4	950 116 080 08	clutch release bearing		1	
4	944 116 080 01	clutch release bearing	92	1	G50.10 CARRERA RS
5	950 116 813 06	guide tube		1	
5	950 116 813 30	guide tube	92	1	G50.10 CARRERA RS
6	999 062 007 02	stud BM 8 X 22		2	
7	900 270 055 02	countersunk-head screw M 6 X 14		2	
8	950 116 710 04	operating shaft		1	
9	999 113 418 40	gasket		2	
10	999 201 339 00	bush		1	
11	950 116 725 00	cover		1	
12	999 201 365 00	bush		1	
13	950 116 713 02	retaining bracket		1	
14	900 075 057 02	hexagon-head bolt M 6 X 16		1	
15	901 351 927 10	dust boot		1	
16	928 351 945 03	ventilation valve		1	
17	950 116 715 01	bush		2	
		- -- E N D -- -			

Model	Year	MG	SG	Illustration	Restrictions	Update				
964	94	3	01	301-15		194	17:40	24.11.2005	PORSCHE	PET	PORSCHE

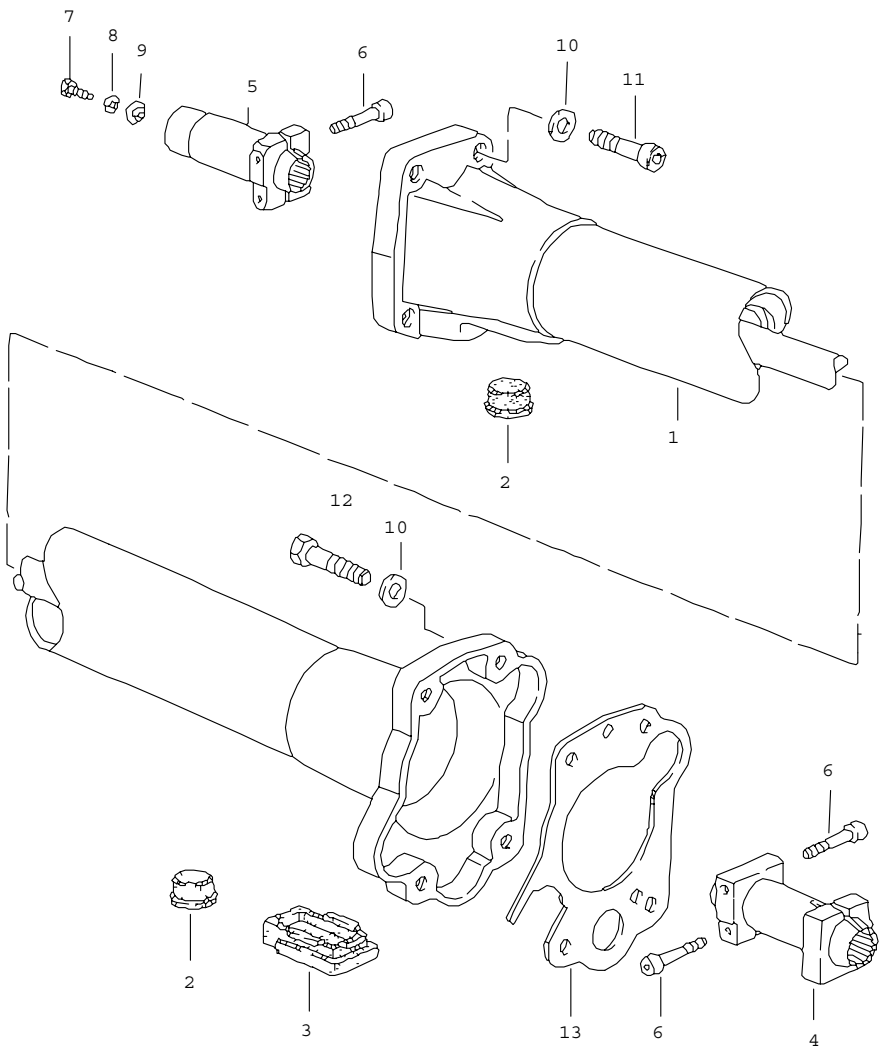

Pos	Part Number	Name	Remarks	Qty	Model
		central tube			
1	> 964 421 012 21	central tube		1	
2	999 703 233 40	plug		2	
3	964 421 251 00	cover		1	
4	922 421 051 02	clamping sleeve		1	
5	964 421 042 01	clamping sleeve		1	
6	931 421 240 00	clamping screw		3	
7	999 072 005 09	hexagon-head bolt M 6 X 12		1	
8	964 421 247 01	sealing washer		1	
9	964 421 245 01	sealing ring		1	
10	900 025 009 02	washer A 13		8	
11	900 067 170 02	pan-head screw M 12 X 1,5 X 40		4	
12	N 010 141 4	hexagon-head bolt M 12 X 1,5 X 45		4	
13	964 301 171 02	intermediate plate		1	
		- -- E N D -- -			

Model	Year	MG	SG	Illustration	Restrictions	Update	17:40	24.11.2005	PORSCHE	PET	PORSCHE
964	94	3	02	302-00		194					

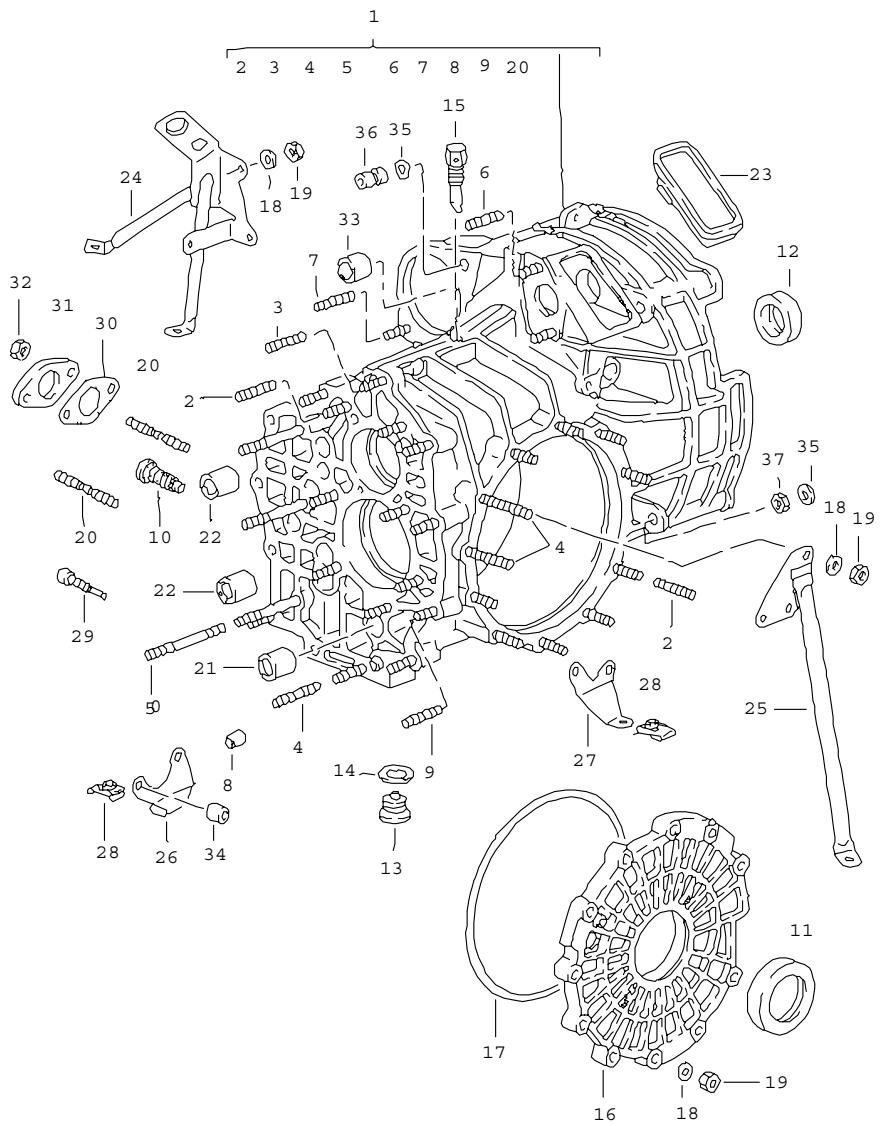

Pos	Part Number	Name	Remarks	Qty	Model
		replacement transmission ready for installation transmission case			
-	> 964 300 030 00	replacement transmission limited-slip differential	-89	1	G64.00
-	> 964 300 030 01	replacement transmission limited-slip differential	-89	1	G64.01
-	> 964 300 030 02	replacement transmission limited-slip differential	90	1	G64.00
-	> 964 300 030 03	replacement transmission limited-slip differential	90	1	G64.01
-	A 964 300 030 04	replacement transmission limited-slip differential	91-92	1	G64.00
-	> 964 300 030 07	replacement transmission limited-slip differential	93-	1	G64.00
-	> 964 300 030 10	replacement transmission limited-slip differential	93-	1	G64.00 M 491
-	A 964 300 030 05	replacement transmission limited-slip differential	91-92	1	G64.01
-	> 964 300 030 08	replacement transmission limited-slip differential	93-	1	G64.01
-	> 964 300 030 11	replacement transmission limited-slip differential	93-	1	G64.01 M 491
-	A 964 300 030 06	replacement transmission limited-slip differential	92	1	G64.02
-	964 300 030 09	replacement transmission limited-slip differential	93-	1	G64.02
-	964 300 030 12	replacement transmission limited-slip differential	93-	1	G64.02 M 491
-	> 950 300 010 03	replacement transmission	-90	1	G50.03
-	A 950 300 010 08	replacement transmission	91-92	1	G50.03
-	> 950 300 010 13	replacement transmission	93-	1	G50.03
-	> 950 300 020 03	replacement transmission limited-slip differential	-90	1	G50.03
-	A 950 300 020 08	replacement transmission limited-slip differential	91-92	1	G50.03
-	> 950 300 020 13	replacement transmission limited-slip differential	93-	1	G50.03

Pos	Part Number	Name	Remarks	Qty	Model
-	> 950 300 010 04	replacement transmission	-90	1	G50.04
-	A 950 300 010 09	replacement transmission	91-92	1	G50.04
-	> 950 300 010 14	replacement transmission	93-	1	G50.04
-	> 950 300 020 04	replacement transmission limited-slip differential	-90	1	G50.04
-	A 950 300 020 09	replacement transmission limited-slip differential	91-92	1	G50.04
-	> 950 300 020 14	replacement transmission limited-slip differential	93-	1	G50.04
-	> 950 300 020 10	replacement transmission limited-slip differential	92	1	G50.10
-	> 950 300 020 52	replacement transmission limited-slip differential	91-	1	G50.52
1	950 301 910 05	transmission case	-89	1	
1	964 301 901 01	transmission case	90-	1	
1	964 301 010 52	transmission case		1	G50.52
2	999 062 008 02	stud M 8 X 25		18	
2	999 062 010 02	stud BM 8 X 35		12	G50.52
3	999 062 009 02	stud M 8 X 28		5	
4	999 062 010 02	stud M 8 X 35		5	
5	999 062 156 02	stud M 8 X 78		3	
6	999 062 007 02	stud M 8 X 22		2	
7	999 062 118 02	stud M 10 X 28		1	
8	900 012 144 00	straight pin 12 M 6 X 14		3	
9	999 062 006 02	stud BM 8 X 20		1	
10	928 332 051 02	bellows		1	
11	999 113 347 40	shaft seal		2	
12	999 113 326 41	shaft seal		1	
13	999 063 008 02	screw plug with magnet M 22 X 1,5		1	
14	900 123 011 30	sealing ring A 22 X 27		1	
15	950 301 071 00	bleeder		1	
16	950 301 312 04	transmission cover	-90	1	
16	950 301 312 06	transmission cover	91-	1	
16	950 301 312 51	transmission cover	91-	1	G50.52
17	999 701 745 40	o-ring		1	
18	900 025 007 02	washer A 8,4		13	
19	900 076 025 02	hexagon nut M 8		12	
20	900 060 067 02	stud M 8 X 22		2	
21	999 203 004 10	bush 16 X 22 X 27		1	
22	999 203 003 00	bearing sleeve 16 X 22 X 20		3	
23	950 301 151 01	cap		1	
24	964 119 061 00	strut	/R	1	
25	964 119 055 00	strut	/L	1	
26	964 119 144 00	support	/R	1	
26A	999 209 034 02	spacer sleeve		2	
27	964 119 143 00	support	/L	1	
28	999 507 333 02	captive nut		2	
29	960 332 271 00	pan-head screw		1	G64.00/01
30	928 332 776 00	flange gasket		1	G50.03/04
31	950 301 371 00	cover		1	G50.03/04
32	900 076 025 02	hexagon nut		2	G50.03/04
33	999 531 017 10	bush		1	

Pos	Part Number	Name	Remarks	Qty	Model	Pos	Part Number	Name	Remarks	Qty	Model
34	999 209 034 02	spacer sleeve		2							
35	900 031 005 02	washer 10,5		5							
36	901 104 382 02	cylinder head nut		2							
37	900 157 002 02	hexagon nut M 10		3							
		- -- E N D -- -									

Model	Year	MG	SG	Illustration	Restrictions	Update	17:41	24.11.2005	PORSCHE PET PORSCHE
964	94	3	02	302-05		194			

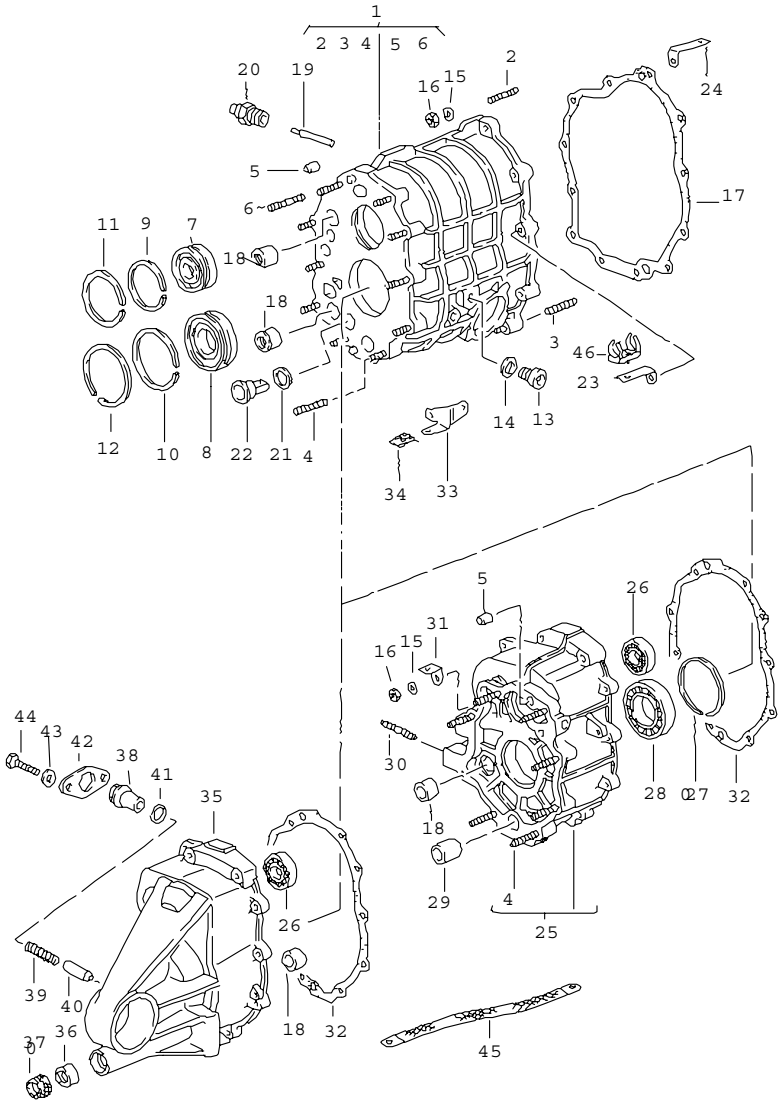

Pos	Part Number	Name	Remarks	Qty	Model
		gear housing transmission cover			
1	950 301 911 05	gear housing		1	
2	999 062 009 02	stud M 8 X 28		3	
3	999 062 010 02	stud M 8 X 35		1	
4	999 062 008 02	stud M 8 X 25		16	
5	900 012 144 00	straight pin 12 M6 X 14		4	
6	999 062 119 02	stud M 8 X 40		2	
7	999 110 142 03	cylindrical-roller bearing 25 X 62 X 17		1	
8	999 110 155 01	cylindrical-roller bearing 45 X 80 X 18		1	G64.00/01/02
8	999 110 109 01	cylindrical-roller bearing 35 X 80 X 18		1	G50.03/04/05 G50.10/52
9	900 111 001 00	snap ring SP 62		1	
10	N 100 709 01	snap ring SP 80		1	
11	999 152 031 01	snap ring SB 68		1	
12	999 152 106 00	snap ring SB 87		1	
13	900 219 001 30	screw plug		1	
14	900 123 011 30	sealing ring A 22 X 27		1	
15	900 025 007 02	washer A 8,4		30	
16	900 076 025 02	hexagon nut M 8		22	
17	950 301 191 01	gasket		1	
18	999 203 003 00	bearing sleeve		3	
19	950 303 240 01	cam follower		1	

Pos	Part Number	Name	Remarks	Qty	Model
20	914 613 541 02	back-up light switch		1	
21	999 701 734 40	sealing ring 29,5 X 1,5 N		1	
22	950 301 120 00	oil tube		1	
23	911 607 131 00	retaining bracket	-90	1	
24	911 606 229 00	retaining bracket		1	
24	911 606 225 00	retaining bracket		1	
25	964 301 915 05	intermediate housing		1	G64.00/01/02
26	999 110 144 00	cylindrical-roller bearing 20 X 47 X 14		1	
27	999 152 112 01	snap ring		1	G64.00/01/02
28	999 110 159 01	cylindrical-roller bearing 44,782 X 75		1	G64.00/01/02
29	999 924 047 00	bearing sleeve		1	G64.00/01/02
30	999 061 093 02	stud M 10 X 20		3	
31	964 315 103 00	support		1	G64.00/01/02
32	950 301 351 02	gasket		1	
33	964 119 141 00	support		1	
34	999 507 333 02	captive nut		1	
35	950 301 901 10	transmission cover	-90	1	G50.03/04
35	964 301 301 01	transmission cover	91-	1	G50.03/04/05 G50.10/52
36	999 203 004 10	bush		1	G50.03/04/05 G50.10/52
37	999 113 404 40	shaft seal		1	G50.03/04/05 G50.10/52
38	964 303 230 00	eccentric	-90	1	
38	964 303 230 01	eccentric	91-	1	
39	928 303 235 20	compression spring	-90	1	
39	950 303 235 01	compression spring	91-	1	
40	928 303 233 25	arresting bush	-90	1	
(40)	950 303 233 00	arresting bush	91-	1	
41	900 123 044 40	sealing ring A 18 X 22	-90	1	
41	900 123 010 40	sealing ring A 20 X 24 X 1,5	91-	1	
42	964 303 231 00	tensioning plate		1	
43	N 011 524 7	washer A 6,4		2	
44	900 075 057 02	hexagon-head bolt M6 X 16		2	
45	999 611 920 20	ground strap		1	
46	999 651 210 40	cable holder	-90	1	
		- -- E N D -- -			

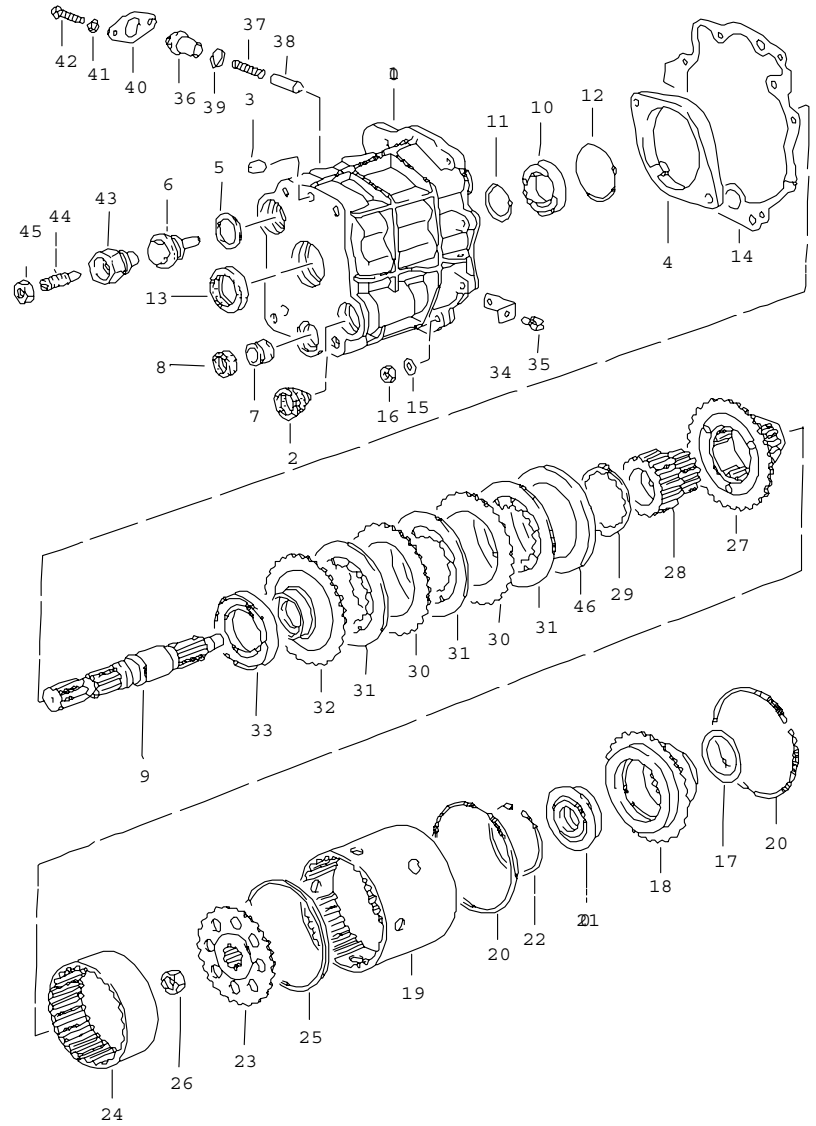

Pos	Part Number	Name	Remarks	Qty	Model
		distributor housing			G64.00/01/02
1	964 301 927 05	distributor housing	-90	1	
1	964 301 104 07	distributor housing	91-	1	
2	964 301 051 01	sealing sleeve		1	
3	900 197 056 01	roll pin 12 X 20		2	
4	964 339 771 03	engaging lever		1	
5	900 123 015 30	sealing ring A 30 X 36	-90	1	
6	964 339 031 01	screw	-90	1	
7	999 203 004 10	bush 16 X 22 X 27		1	
8	928 303 120 01	shaft seal		1	
9	964 302 112 04	shaft		1	
10	999 052 143 02	ball bearing		1	
11	N 012 375 1	circlip 30 X 1,5		1	
12	900 042 025 01	circlip 55 X 2		1	
13	999 113 386 40	sealing ring 30 X 47 X 7		1	
14	964 301 195 02	gasket		1	
15	900 025 007 02	washer A 8,4		7	
16	900 076 025 02	hexagon nut M 8		8	
17	964 302 299 00	adjusting shim 0,7 MM		X	
17	964 302 299 01	adjusting shim 0,8 MM		X	
17	964 302 299 02	adjusting shim 0,9 MM		X	
17	964 302 299 03	adjusting shim 1,0 MM		X	
17	964 302 299 04	adjusting shim 1,1 MM		X	

Pos	Part Number	Name	Remarks	Qty	Model
17	964 302 299 05	adjusting shim 1,2 MM		X	
17	964 302 299 06	adjusting shim 1,3 MM		X	
17	964 302 299 07	adjusting shim 0,25 MM		X	
17	964 302 299 08	adjusting shim 0,6 MM		X	
18	964 339 701 22	gear carrier		1	
19	964 339 704 01	sleeve		1	
20	999 152 114 01	circlip		3	
21	999 052 130 00	bearing 28 X 65 X 16		1	
22	999 042 033 01	circlip 70 X 2,35		X	
22	999 042 034 01	circlip 70 X 2,40		X	
22	999 042 035 01	circlip 70 X 2,45		X	
23	964 339 101 00	disc carrier		1	
22	999 042 036 01	circlip 70 X 2,40		X	
24	964 339 102 00	internal gear 13 : 56		1	
25	999 152 113 01	circlip		1	
26	964 302 272 00	hexagon nut M 24 X 1,25		1	
27	964 339 015 22	planet-gear carrier		1	
28	964 339 103 22	sun gear 1 : 2,24		1	
29	964 339 730 00	tab washer		1	
30	928 332 726 04	disc with external splines 1,3 MM		X	
30	928 332 726 05	disc with external splines 1,5 MM		X	
30	928 332 726 06	disc with external splines 1,7 MM		X	
30	928 332 726 07	disc with external splines 1,9 MM		X	
30	928 332 726 08	disc with external splines 2,1 MM		X	
30	928 332 726 09	disc with external splines 2,3 MM		X	
30	928 332 726 10	disc with external splines 2,5 MM		X	
31	928 332 728 00	inner disc		4	
32	964 339 727 20	seat		1	
33	999 052 177 00	ball bearing 50 X 84 X 10		1	
34	964 315 103 00	support		1	
35	999 651 190 40	cable clip		1	
36	964 303 230 00	eccentric	-90	1	
36	964 303 230 01	eccentric	91-	1	
37	928 303 235 20	compression spring	-90	1	
37	950 303 235 01	compression spring	91-	1	
38	928 303 233 25	arresting bush	-90	1	
(38)	950 303 233 00	arresting bush	91-	1	
39	900 123 044 40	sealing ring A 18 X 22	-90	1	
39	900 123 010 40	sealing ring A 20 X 24 X 1,5	91-	1	
40	964 303 231 00	tensioning plate		1	
41	N 011 524 7	washer A 6,4		2	
42	900 075 057 02	hexagon-head bolt M 6 X 16		2	
43	964 339 723 01	screw	91-	1	
44	964 339 725 02	pin	91-	1	
45	900 183 015 02	hexagon nut M 12 X 1,5	91-	1	
46	999 201 435 00	washer 80 X 115		1	

Pos	Part Number	Name	Remarks	Qty	Model	Pos	Part Number	Name	Remarks	Qty	Model
		- -- E N D -- -									

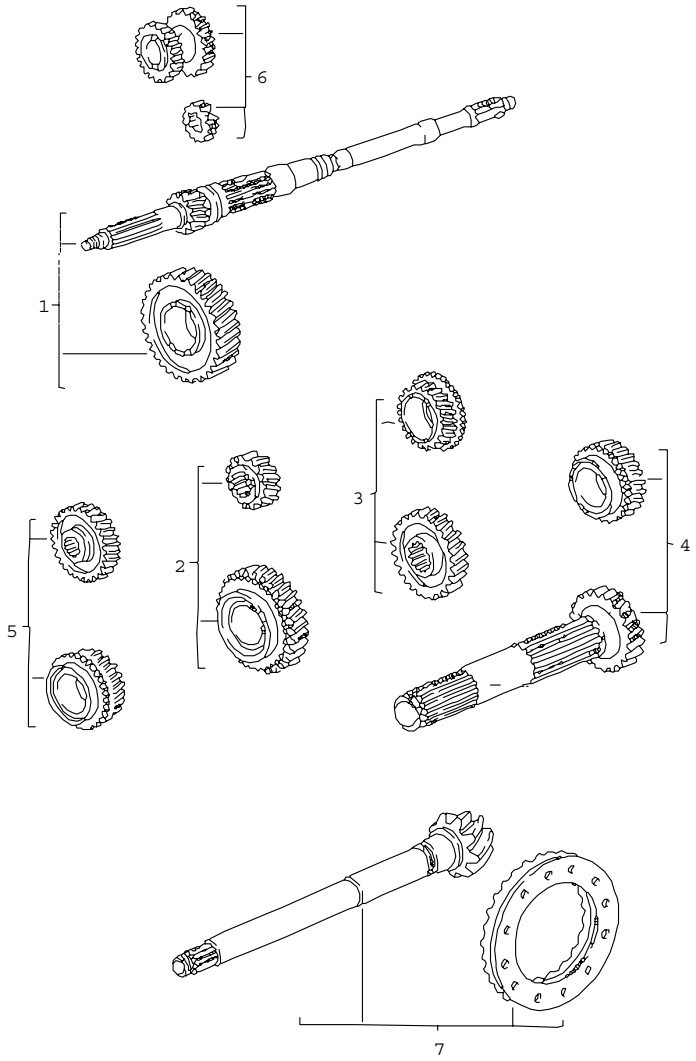

Pos	Part Number	Name	Remarks	Qty	Model
		gear sets G64.00			
1	964 302 901 11	gear set 1st gear Z = 42 : 12	-90	1	
1	964 302 901 11	gear set 1st gear Z = 42 : 12	91-	1	
2	964 302 902 30	gear set 2nd gear Z = 36 : 17 1 colour line together with 999.201.367.00 2 colour lines together with 999.201.368.00 see technical information		1	
3	964 302 903 25	gear set 3rd speed Z = 39 : 27	-90	1	
3	964 302 903 26	gear set 3rd speed Z = 39 : 27	91-	1	
4A	964 302 904 30	gear set 4th speed Z = 38 : 35	-91	1	
4A	964 302 904 32	gear set 4th speed Z = 38 : 35	92-	1	
5	964 302 905 40	gear set 5th speed Z = 33 : 38	-91	1	
5	964 302 905 41	gear set 5th speed Z = 33 : 38	92-	1	
6	964 302 907 01	gear set reverse gear		1	
7	964 302 911 05	ring gear and pinion shaft 31 : 9 G64.01		1	

Pos	Part Number	Name	Remarks	Qty	Model
1	964 302 901 57	gear set 1st gear Z = 41 : 13	-90	1	
1	964 302 901 15	gear set 1st gear Z = 41 : 13	91-	1	
2	964 302 902 10	gear set 2nd gear Z = 36 : 19 1 colour line together with 999.201.367.00 2 colour lines together with 999.201.368.00 see technical information		1	
3	964 302 903 30	gear set 3rd speed Z = 36 : 27	-90	1	
3	964 302 903 31	gear set 3rd speed Z = 36 : 27	91-	1	
4A	964 302 904 35	gear set 4th speed Z = 36 : 35	-91	1	
4A	964 302 904 36	gear set 4th speed Z = 36 : 35	92-	1	
5	964 302 905 40	gear set 5th speed Z = 33 : 38	-91	1	
5	964 302 905 41	gear set 5th speed Z =33 : 38	92-	1	
6	964 302 907 01	gear set reverse gear		1	
7	964 302 911 05	ring gear and pinion shaft 31 : 9 G64.02		1	
1	964 302 901 15	gear set 1st gear Z = 41 : 13		1	
2	964 302 902 10	gear set 2nd gear Z = 36 : 19		1	
3	964 302 903 31	gear set 3rd speed Z = 36 : 27		1	
4A	964 302 904 35	gear set 4th speed Z = 36 : 35	-91	1	
4A	964 302 904 36	gear set 4th speed Z = 36 :35	92-	1	
5	964 302 905 60	gear set 5th speed Z = 31 :41		1	
6	964 302 907 01	gear set reverse gear		1	
7	964 302 911 05	ring gear and pinion shaft 31 : 9 G50.03		1	
1	950 302 901 02	gear set 1st gear Z = 42 : 12	-90	1	
1	950 302 901 11	gear set 1st gear Z = 42 : 12	91-	1	
2	950 302 902 02	gear set 2nd gear Z = 35 : 17		1	
3	950 302 903 36	gear set 3rd speed Z = 38 : 27		1	
4	950 302 904 30	gear set 4th speed Z = 38 : 35	-91	1	
4	950 302 904 32	gear set 4th speed Z = 38 : 35	92-	1	
5	950 302 905 41	gear set 5th speed Z = 33 : 38	-91	1	

Pos	Part Number	Name	Remarks	Qty	Model
5	950 302 905 40	gear set 5th speed Z = 33 : 38	92-	1	
6	950 302 907 03	gear set reverse gear		1	
7	950 302 911 05	ring gear and pinion shaft 31 : 9 G50.04		1	
1	950 302 901 05	gear set 1st gear Z = 41 : 13	-90	1	
1	950 302 901 15	gear set 1st gear Z = 41 : 13	91-	1	
2	950 302 902 10	gear set 2nd gear Z = 36 : 19		1	
3	950 302 903 31	gear set 3rd speed Z = 36 : 27		1	
4	950 302 904 35	gear set 4th speed Z = 36 : 35	-91	1	
4	950 302 904 36	gear set 4th speed Z = 36 : 35	92-	1	
5	950 302 905 41	gear set 5th speed Z = 33 : 38	-91	1	
5	950 302 905 40	gear set 5th speed Z = 33 : 38	92-	1	
6	950 302 907 03	gear set reverse gear		1	
7	950 302 911 05	ring gear and pinion shaft 31 : 9 G50.05		1	
1	950 302 901 11	gear set 1st gear Z = 42 : 12		1	

Pos	Part Number	Name	Remarks	Qty	Model
2	950 302 902 02	gear set 2nd gear Z = 35 : 17		1	
3	950 302 903 36	gear set 3rd speed Z = 38 : 27		1	
4	950 302 904 30	gear set 4th speed Z = 38 : 35	-91	1	
4	950 302 904 32	gear set 4th speed Z = 38 :35	92-	1	
5	950 302 905 41	gear set 5th speed Z = 33 : 38	-91	1	
5	950 302 905 40	gear set 5th speed Z 0 33 : 38	92-	1	
6	950 302 907 03	gear set reverse gear		1	
7	950 302 911 06	ring gear and pinion shaft 30 : 9 G50.10		1	
1	950 302 901 16	gear set 1st gear Z = 41 : 13		1	
2	950 302 902 12	gear set 2nd gear Z = 36 : 19		1	
3	950 302 903 37	gear set 3rd speed Z = 38 : 27		1	
4	950 302 904 31	gear set 4th speed Z = 38 : 35	-91	1	
4	950 302 904 34	gear set 4th speed Z = 38 : 35	92-	1	
5	950 302 905 41	gear set 5th speed Z = 33 : 38	-91	1	

Pos	Part Number	Name	Remarks	Qty	Model	Pos	Part Number	Name	Remarks	Qty	Model
5	950 302 905 40	gear set 5th speed Z = 33 : 38	92-	1							
6	950 302 907 03	gear set reverse gear		1							
7	950 302 911 05	ring gear and pinion shaft 31 : 9 G50.52		1							
1	950 302 901 60	gear set 1st gear Z = 41 : 13		1							
2	950 302 902 27	gear set 2nd gear Z = 34 : 19		1							
3	950 302 903 16	gear set 3rd speed Z 33 : 26		1							
4	950 302 904 21	gear set 4th speed Z 29 : 30		1							
5	950 302 905 60	gear set 5th speed Z =31 : 41		1							
6	950 302 907 03	gear set reverse gear		1							
7	950 302 911 70	ring gear and pinion shaft 31 : 9		1							
		- -- E N D -- -									

Model	Year	MG	SG	Illustration	Restrictions	Update	17:41	24.11.2005	PORSCHE	PET	PORSCHE
964	94	3	03	303-05		194					

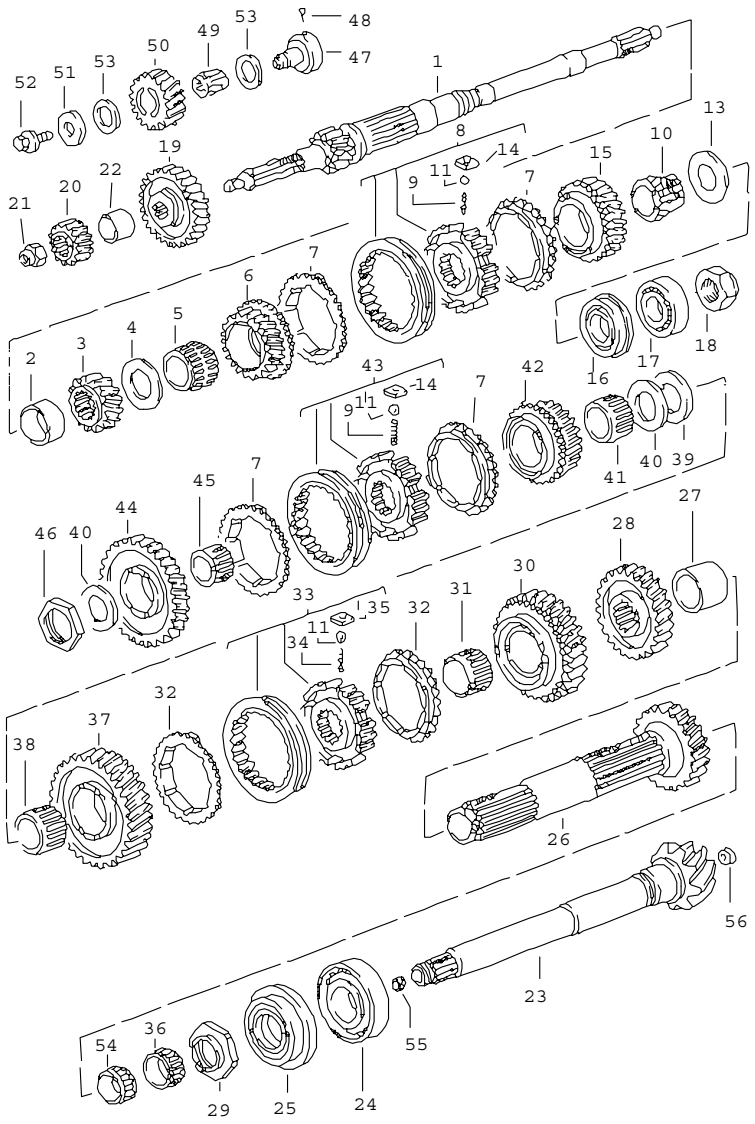

Pos	Part Number	Name	Remarks	Qty	Model
		gears and shafts			G64.00/01/02
		gear sets see group 3/03/00			
1	-	drive shaft		1	
2	950 302 266 01	bush		1	
3	-	fixed gear wheel 2nd gear		1	
4	950 302 293 05	thrust washer		1	
5	999 201 259 02	needle cage 38 X 50 X 32,2		1	
6	-	loose gear wheel 3rd speed		1	
7	928 304 211 05	synchroniser ring		4	
8	950 304 021 06	guide sleeve 3rd, 4th speed		1	
9	928 304 261 01	compression spring		6	
10	999 201 239 02	needle cage 35 X 50 X 32,2		3	
11	N 025 653 2	ball $ = 6,5 MM		9	
13	950 302 294 05	thrust washer		1	
14	928 304 251 00	stone		6	
15	-	loose gear wheel 4th speed		1	
16	999 052 094 00	four-point bearing		1	
17	999 110 117 01	cylindrical-roller bearing 30 X 62 X 20		1	
18	999 034 033 00	hexagon nut		2	
19	-	fixed gear wheel 5th speed		1	
20	-	reverse gear wheel		1	
21	950 302 281 01	lock nut		1	
22	950 302 268 02	bush		1	
23	-	drive shaft		1	

Pos	Part Number	Name	Remarks	Qty	Model
24	999 110 119 01	cylindrical-roller bearing 40 X 90 X 23		1	
25	999 052 164 00	four-point bearing		1	
26	-	fixed gear wheel 4th speed		1	
27	964 302 267 00	spacer sleeve		1	
28	-	fixed gear wheel 3rd speed		1	
29	964 302 270 00	hexagon nut		1	
30	-	loose gear wheel 2nd gear		1	
31	999 201 367 00	needle cage 47,3 X 60		1	
31	999 201 368 00	needle cage 47,3 X 60 see technical information		1	WW
32	950 304 311 02	synchroniser ring		2	
33	964 304 031 02	guide sleeve		1	
34	928 304 261 00	compression spring		3	
35	950 304 351 00	stone		3	
36	999 201 280 00	needle cage 35 X 40 X 17		1	
37	-	loose gear wheel 1st gear		1	
38	999 201 284 01	needle cage 45 X 60 X 32,2		1	
39	964 302 291 01	thrust washer		1	
40	964 302 295 02	thrust washer		2	
41	999 201 283 01	needle cage 44,776 X 55		1	
42	-	loose gear wheel 5th speed		1	
43	964 304 021 00	guide sleeve		1	
44	-	loose gear wheel reverse gear		1	
45	999 201 285 01	needle cage 44,8 X 55		1	
46	964 302 275 00	hexagon nut M 42 X 1,25		1	
47	950 302 228 03	bolt		1	
48	N 013 302 1	roll pin		1	
49	999 201 227 00	needle cage		1	
50	-	reverse idler gear		1	
51	950 302 297 10	thrust washer		1	
52	950 302 230 00	screw plug		1	
53	950 302 297 12	thrust washer		2	
54	999 201 281 00	needle cage 32 X 36 X 15		1	
55	999 201 054 00	needle cage 12 X 18 X 12		1	
56	964 302 120 00	ring		1	

- -- E N D -- -

Model	Year	MG	SG	Illustration	Restrictions	Update				
964	94	3	03	303-10		194	17:42	24.11.2005	PORSCHE	PET	PORSCHE

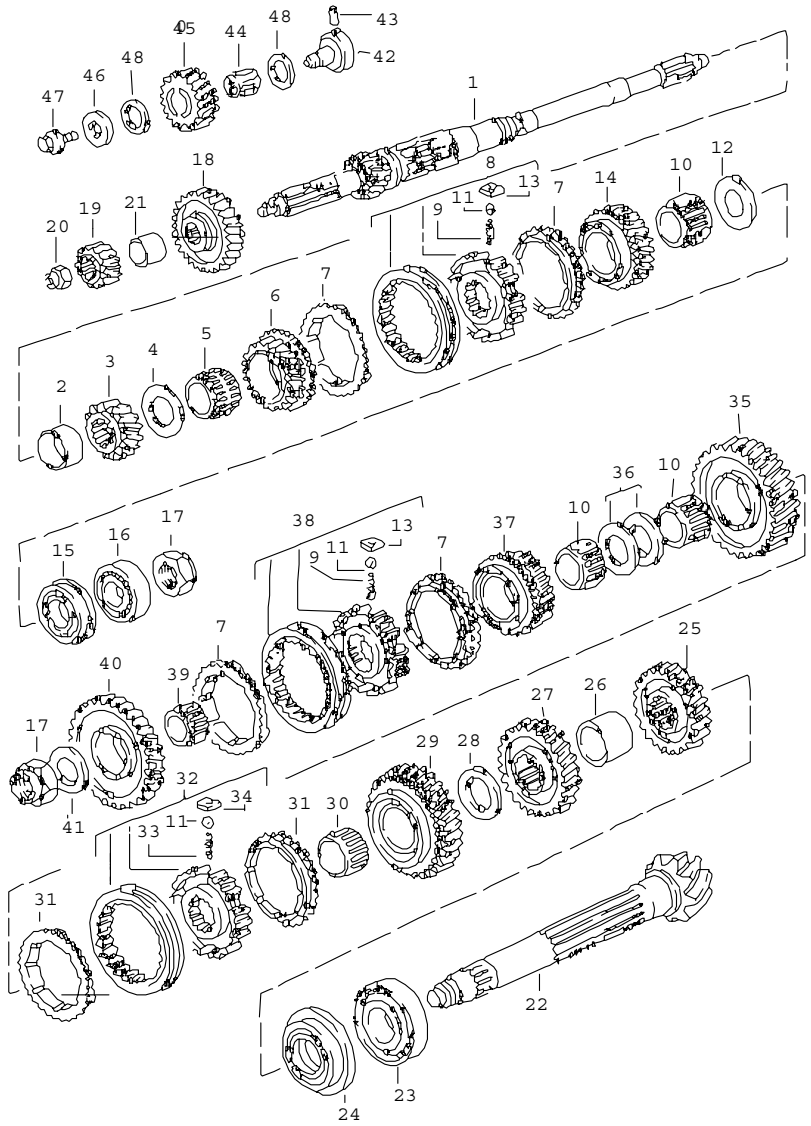

Pos	Part Number	Name	Remarks	Qty	Model
		gears and shafts			G50.03/04/05 G50.10/52
		gear sets see group 3/03/00			
1		drive shaft		1	
2	950 302 266 01	bush fixed gear wheel 2nd gear		1 1	
4	950 302 293 05	thrust washer		1	
5	999 201 259 02	needle cage 38 X 50 X 32,2 loose gear wheel 3rd speed		1 1	
7	928 304 211 05	synchroniser ring		4 2 4	G50.03/04/05 G50.10 G50.52
7	928 304 211 30	synchroniser ring 3rd, 4th speed		2	G50.10
8	950 304 021 06	guide sleeve 3rd, 4th speed		1	G50.03/04/05 G50.52
8	950 304 021 30	guide sleeve 3rd, 4th speed		1	G50.10
9	928 304 261 01	compression spring		6	
10	999 201 239 02	needle cage 35 X 50 X 32,2		3	
11	N 025 653 2	ball $ = 6,5 MM		9	
12	950 302 294 05	thrust washer		1	
13	928 304 251 00	stone loose gear wheel 4th speed		6 1	
15	999 052 094 00	four-point bearing		1	
16	999 110 117 01	cylindrical-roller bearing 30 X 62 X 20		1	
17	999 034 033 00	hexagon nut fixed gear wheel 5th speed reverse gear wheel		2 1 1	
20	950 302 281 01	lock nut		1	

Pos	Part Number	Name	Remarks	Qty	Model
21	950 302 268 02	bush		1	
		pinion shaft		1	
23	999 110 119 01	cylindrical-roller bearing 40 X 90 X 23		1	
24	999 052 164 00	four-point bearing		1	
		fixed gear wheel 4th speed		1	
26	950 302 267 01	spacer sleeve		1	
		fixed gear wheel 3rd speed		1	
28	950 302 292 00	thrust washer		1	
		loose gear wheel 2nd gear		1	
30	999 201 225 04	needle-roller bearing		1	
31	950 304 311 02	synchroniser ring		2	G50.03/04/05 G50.52
31	950 304 311 30	synchroniser ring		2	G50.10
32	950 304 031 03	guide sleeve 1st/2nd gear		1	G50.03/04/05 G50.52
32	950 304 031 30	guide sleeve 1st/2nd gear		1	G50.10
33	928 304 261 00	compression spring		3	
34	950 304 351 00	stone		3	
		loose gear wheel 1st gear		1	
36	950 302 295 07	thrust washer see q-information NR. 4/87 1st gear 5th speed		2	
		loose gear wheel 5th speed		1	
38	950 304 021 05	guide sleeve 5-speed reverse gear		1	
39	999 201 253 00	needle cage		1	
		loose gear wheel reverse gear		1	
41	950 302 296 00	thrust washer	-92	1	
41	950 302 296 07	thrust washer	93-	1	
42	950 302 228 03	bolt		1	
43	N 013 302 1	roll pin		1	
44	999 201 227 00	needle cage		1	
		reverse idler gear		1	
46	950 302 297 10	thrust washer		1	
47	950 302 230 00	screw plug		1	
48	950 302 297 12	thrust washer		2	
		- -- E N D -- -			

Model	Year	MG	SG	Illustration	Restrictions	Update	17:42	24.11.2005	PORSCHE PET PORSCHE
964	94	3	04	304-00		194			

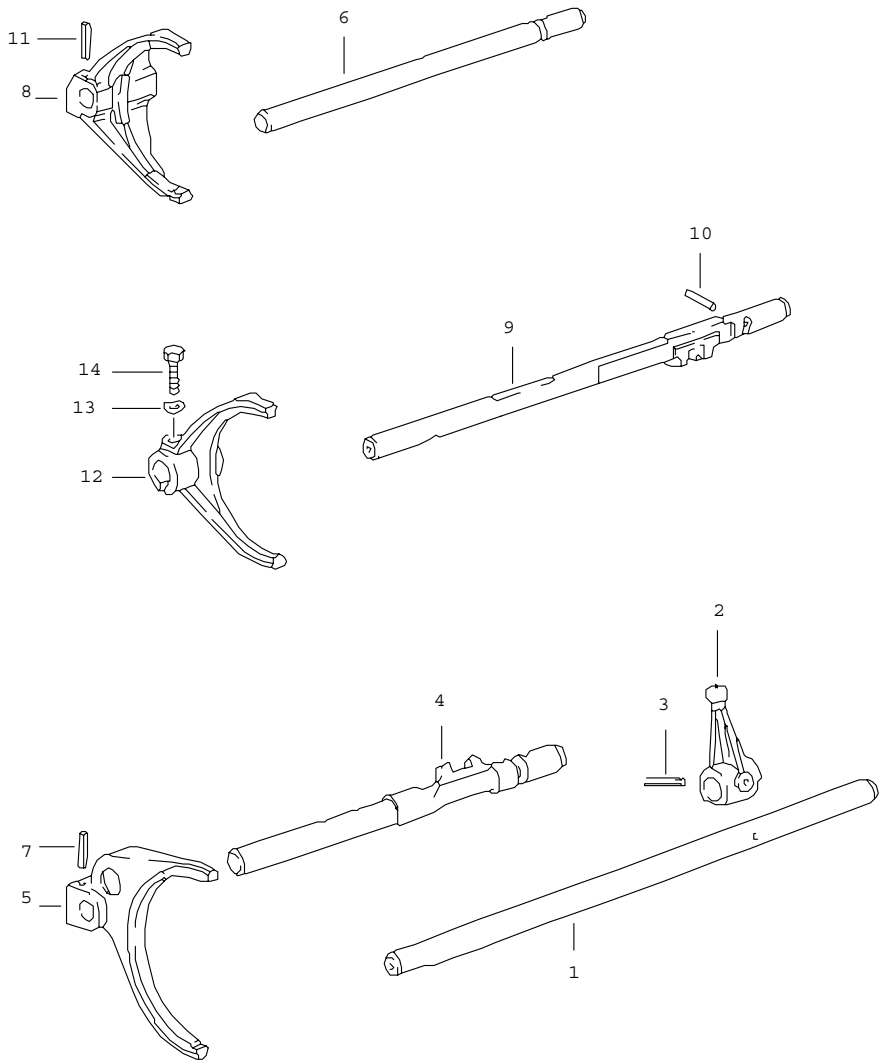

Pos	Part Number	Name	Remarks	Qty	Model
		shift rods forks			
1	964 303 109 04	gear shift rod	-90	1	G64.00/01
1	964 303 109 06	gear shift rod	91-	1	G64.00/01/02
1	950 303 109 12	gear shift rod		1	G50.03/04/05 G50.10/52
2	950 303 120 01	shift lever		1	
3	900 309 024 00	roll pin 5 X 26		1	
4	950 303 101 00	gear shift rod 1st/2nd gear		1	
5	950 303 111 01	shift fork 1st/2nd gear		1	
6	950 303 103 00	gear shift rod 3rd, 4th speed		1	
7	900 095 017 01	roll pin 5 X 24		1	
8	950 303 113 04	shift fork 3rd, 4th speed		1	
9	950 303 105 04	gear shift rod reverse gear and 5th speed		1	
10	950 303 143 00	detent		1	
11	N 013 317 1	roll pin 5 X 28	-91	1	
11	900 095 017 01	tensioning sleeve 5 X 24	92-	1	
12	950 303 115 03	shift fork reverse gear and 5th speed		1	
13	900 025 007 02	washer M 8,4		1	
14	900 075 099 02	hexagon-head bolt M 8 X 30		1	
		- -- E N D -- -			

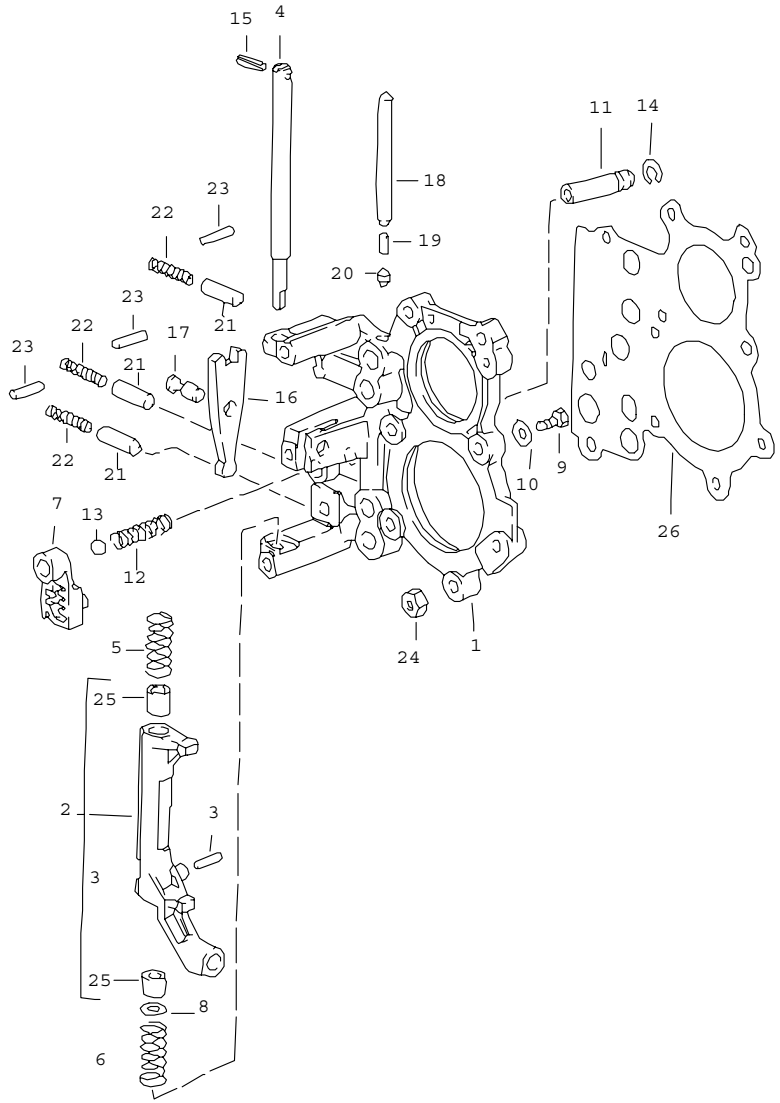

Pos	Part Number	Name	Remarks	Qty	Model
		tensioning plate shift control lock device			
1	950 303 130 50	tensioning plate		1	
2	950 303 035 04	reverse lever		1	G64.00/01/02 G50.03/04/05 G50.52
2	950 303 035 04	reverse lever		1	G50.10
3	900 302 028 01	straight pin 4 M6 X 20		1	
4	950 303 134 01	shaft		1	
5	950 303 133 12	compression spring		1	
6	950 303 132 12	compression spring		1	
7	950 303 140 03	shift gate		1	
8	N 027 381 1	shim		1	
9	N 010 212 0	hexagon-head bolt M 6 X 12		1	
10	N 011 666 3	washer		1	
11	950 303 136 00	dowel sleeve		1	
12	950 303 137 00	compression spring		1	
13	N 025 669 2	ball $ = 10 MM		1	
14	999 152 018 01	circlip SW 14		1	
15	N 013 304 1	roll pin 4 X 20		1	
16	950 303 146 01	reverse lever		1	
17	950 303 145 00	bolt		1	
18	950 303 141 00	detent long		1	
19	950 303 143 00	detent		1	
20	950 303 142 00	detent short		1	
21	928 303 233 25	arresting bush		3	
22	959 303 235 00	compression spring		3	

Pos	Part Number	Name	Remarks	Qty	Model	Pos	Part Number	Name	Remarks	Qty	Model
23	900 109 106 00	needle-roller bearing 4 H11 X 16		3							
24	900 076 025 02	hexagon nut M 8		10							
25	999 924 026 00	bush 12 X 14 X 15		2							
26	950 303 125 10	adjusting shim 0,1 MM		X							
26	950 303 125 11	adjusting shim 0,15 MM		X							
26	950 303 125 12	adjusting shim 0,2 MM		X							
		- -- E N D -- -									

Model	Year	MG	SG	Illustration	Restrictions	Update				
964	94	3	05	305-00		194	17:42	24.11.2005	PORSCHE	PET	PORSCHE

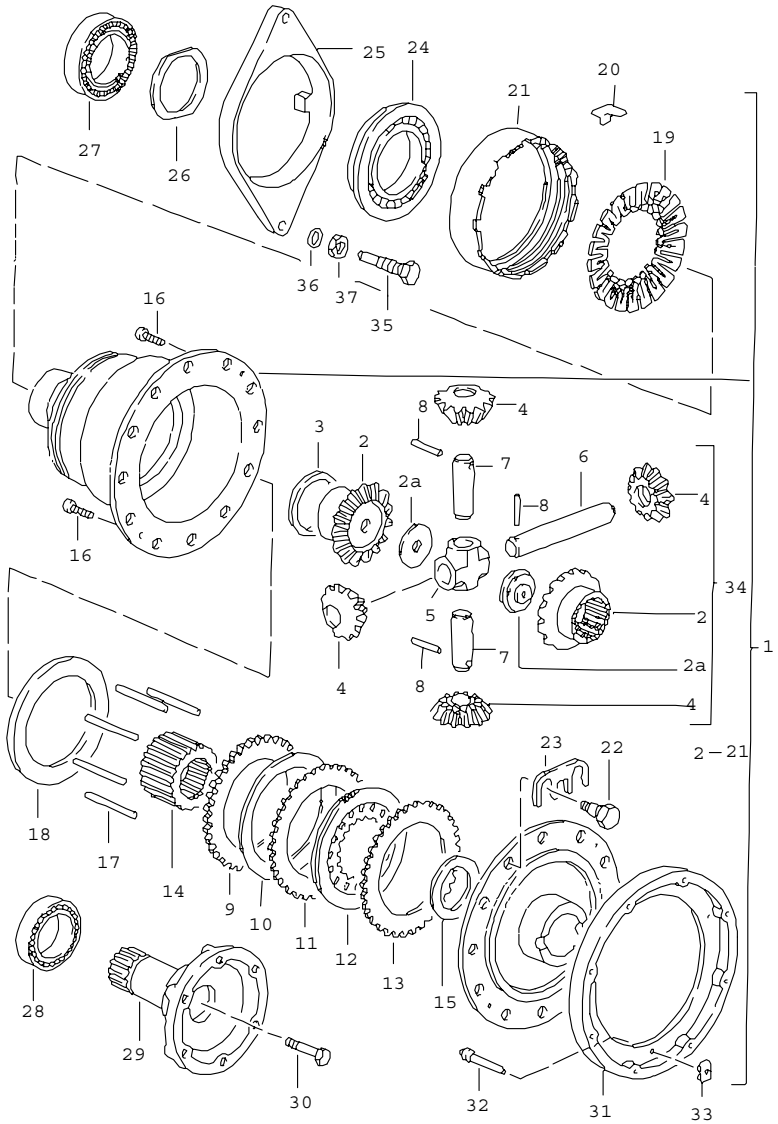

Pos	Part Number	Name	Remarks	Qty	Model
		differential			G64.00/01/02
1	950 332 072 03	limited-slip differential		1	
2	-	shaft bevel gear		2	
2A	-	nut		2	
3	950 332 719 00	thrust washer 2,00 MM		X	
3	950 332 719 01	thrust washer 2,10 MM		X	
3	950 332 719 02	thrust washer 2,20 MM		X	
3	950 332 719 03	thrust washer 2,30 MM		X	
3	950 332 719 04	thrust washer 2,40 MM		X	
4	-	bevel pinion		4	
5	950 332 745 00	4 way connector		1	
6	950 332 741 00	differential bolt long		1	
7	950 332 743 00	differential bolt short		2	
8	900 309 019 00	roll pin 5 X 32		3	
9	950 332 711 01	thrust ring		1	
10	999 523 013 01	cup spring		1	
11	950 332 727 30	disc with external splines 1,3 MM		1	
11	950 332 727 31	disc with external splines 0,5 MM		X	
11	950 332 727 32	disc with external splines 0,7 MM		X	
11	950 332 727 33	disc with external splines 0,9 MM		X	
11	950 332 727 34	disc with external splines 1,1 MM		X	
11	950 332 727 35	disc with external splines 1,5 MM		X	

Pos	Part Number	Name	Remarks	Qty	Model
11	950 332 727 36	disc with external splines 1,7 MM		X	
11	950 332 727 37	disc with external splines 1,9 MM		X	
11	950 332 727 38	disc with external splines 2,1 MM		X	
12	950 332 722 10	inner disc		7	
13	950 332 727 10	disc with external splines		7	
14	950 332 748 01	disc carrier		1	
15	950 332 718 21	thrust washer 1,90 MM		X	
15	950 332 718 22	thrust washer 2,00 MM		X	
15	950 332 718 23	thrust washer 2,10 MM		X	
15	950 332 718 24	thrust washer 2,20 MM		X	
15	950 332 718 25	thrust washer 2,30 MM		X	
15	950 332 718 26	thrust washer 2,40 MM		X	
15	950 332 718 27	thrust washer 2,50 MM		X	
16	900 249 008 02	countersunk-head screw M6 X 12		2	
17	950 332 715 01	pin		8	
18	950 332 713 02	thrust ring		1	
19	950 332 756 01	compression spring		1	
20	950 332 753 03	tab washer		1	
21	950 332 751 02	ring		1	
22	928 332 276 05	hexagon-head bolt		12	
23	950 332 285 00	tab washer		6	
24	950 332 761 05	deep-groove ball bearing		1	
25	950 332 771 06	engaging lever		1	
26	950 332 268 00	adjusting ring 0,25 MM		X	
26	950 332 268 01	adjusting ring 1,60 MM		X	
26	950 332 268 02	adjusting ring 1,70 MM		X	
26	996 332 266 56	adjusting ring 1,80 MM		X	
26	950 332 268 04	adjusting ring 1,90 MM		X	
26	950 332 268 05	adjusting ring 2,00 MM		X	
26	950 332 268 06	adjusting ring 2,10 MM		X	
26	950 332 268 07	adjusting ring 2,20 MM		X	
26	950 332 268 08	adjusting ring 2,30 MM		X	
26	950 332 268 09	adjusting ring 2,40 MM		X	
26	950 332 268 10	adjusting ring 2,50 MM		X	
26	950 332 268 11	adjusting ring 2,60 MM		X	
26	950 332 268 12	adjusting ring 2,70 MM		X	
26	996 332 266 76	adjusting ring 2,80 MM		X	
26	950 332 268 14	adjusting ring 2,90 MM		X	
26	996 332 266 50	adjusting ring 3,00 MM		X	
26	950 332 268 16	adjusting ring 3,10 MM		X	
27	999 059 066 01	taper roller bearing 50 X 80 X 20		1	
28	999 059 064 00	taper roller bearing 50 X 90 X 21,7		1	
29	950 332 209 81	joint flange	/R	1	

Pos	Part Number	Name	Remarks	Qty	Model
29	950 332 209 71	joint flange 100,5 MM	/R 93-	1	M 491
29	950 332 209 86	joint flange	/L	1	
29	950 332 209 76	joint flange 110,5 MM	/L 93-	1	M 491
30	N 010 480 3	hexagon-head bolt M10 X 80		1	
30	N 010 456 5	hexagon-head bolt M10 X 90		1	
31	950 318 045 04	magnet carrier disc	-90	1	
32	950 318 355 11	bolt		3	
33	N 012 644 1	lock		3	
34	964 332 907 00	1 set differential pinions		1	
35	960 332 271 00	pan-head screw	-90	1	
35	928 332 271 05	hexagon-head bolt	91-	1	
36	N 011 564 2	washer		1	
(36)	900 123 043 30	sealing ring A 12 X 15,5	91-	1	
37	N 011 020 8	hexagon nut M 12 X 1,5	91-	1	
		- -- E N D -- -			

Pos	Part Number	Name	Remarks	Qty	Model

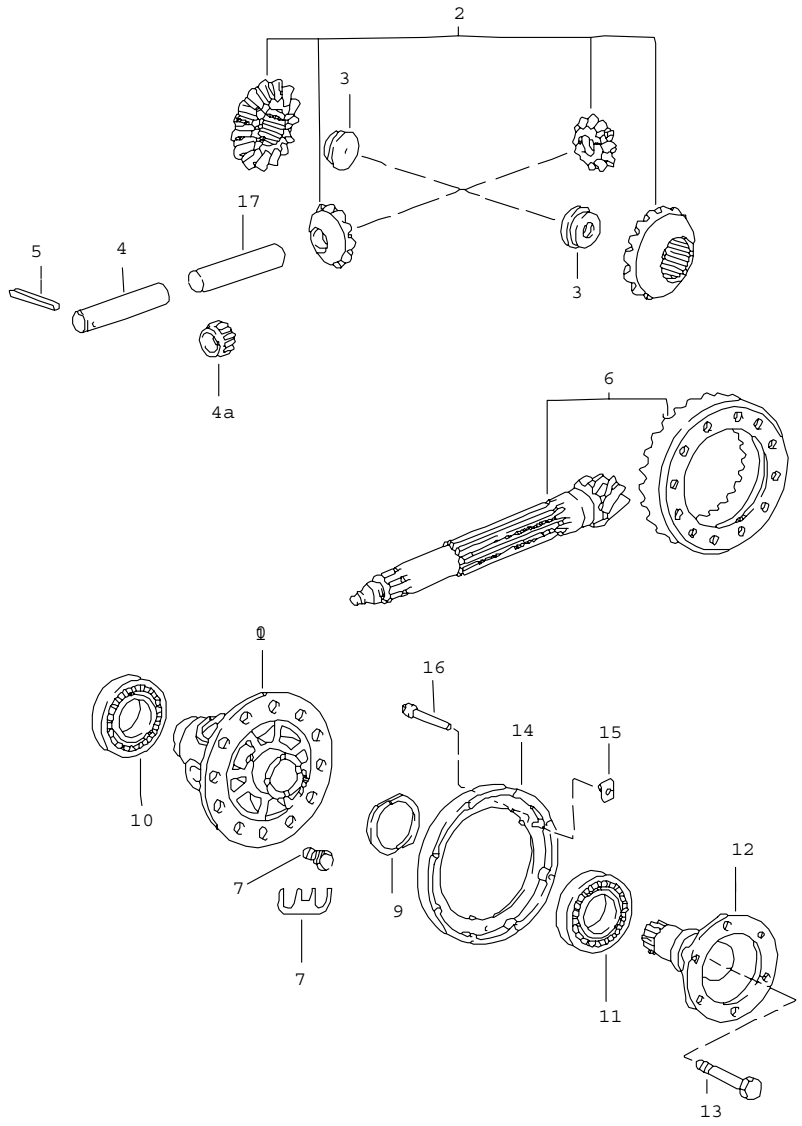

Pos	Part Number	Name	Remarks	Qty	Model
		differential			G50.03/04/05
1	950 332 212 01	differential housing		1	
2	950 332 902 00	differential pinions 1 set		1	
3	928 332 279 03	threaded disc		2	
4	928 332 207 07	differential bolt		1	
4A	999 201 347 00	needle cage 18 X 22 X 19,8		2	
5	900 309 035 00	roll pin 5 X 40		1	
6	950 302 911 05	ring gear and pinion shaft 31:9		1	G50.03/04
7 W	928 332 276 03	hexagon-head bolt		12	
7	928 332 276 05	hexagon-head bolt		12	
8	950 332 285 00	tab washer		6	
9	950 332 268 00	adjusting ring 0,25 MM		X	
9	950 332 268 01	adjusting ring 1,6 MM		X	
9	950 332 268 02	adjusting ring 1,7 MM		X	
9	996 332 266 56	adjusting ring 1,8 MM		X	
9	950 332 268 04	adjusting ring 1,9 MM		X	
9	950 332 268 05	adjusting ring 2,0 MM		X	
9	950 332 268 06	adjusting ring 2,1 MM		X	
9	950 332 268 07	adjusting ring 2,2 MM		X	
9	950 332 268 08	adjusting ring 2,3 MM		X	
9	950 332 268 09	adjusting ring 2,4 MM		X	
9	950 332 268 10	adjusting ring 2,5 MM		X	

Pos	Part Number	Name	Remarks	Qty	Model
9	950 332 268 11	adjusting ring 2,6 MM		X	
9	950 332 268 12	adjusting ring 2,7 MM		X	
9	996 332 266 76	adjusting ring 2,8 MM		X	
9	950 332 268 14	adjusting ring 2,9 MM		X	
9	996 332 266 50	adjusting ring 3,0 MM		X	
9	950 332 268 16	adjusting ring 3,1 MM		X	
10	999 059 027 00	taper roller bearing 50 X 80 X 20		1	
11	999 059 064 00	taper roller bearing 50 X 90 X 21,7		1	
12	950 332 209 01	joint flange		2	
13	N 010 472 4	hexagon-head bolt M 10 X 85		2	
14	950 318 045 03	magnet carrier disc		1	
14	950 318 045 04	magnet carrier disc		1	M 220
15	N 012 644 1	lock		3	
16	950 318 355 12	bolt		3	
16	950 318 355 10	bolt		3	M 220
17	950 332 205 00	spacer sleeve		1	
		- -- E N D -- -			

Pos	Part Number	Name	Remarks	Qty	Model

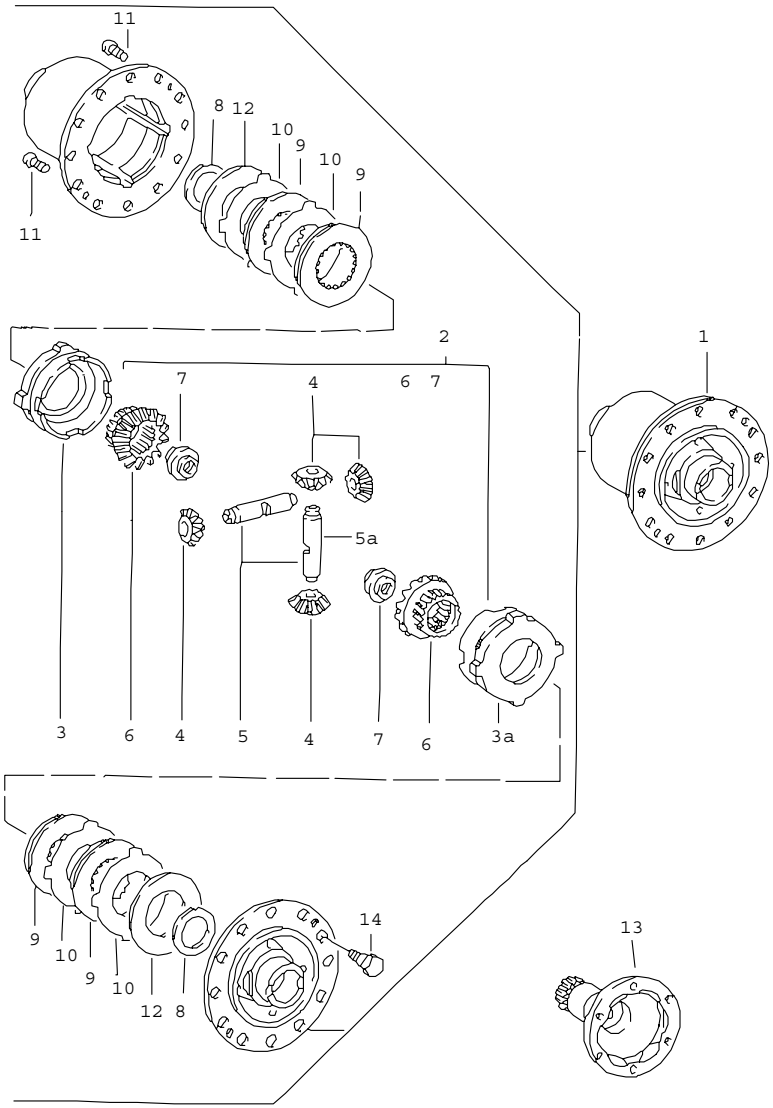

Pos	Part Number	Name	Remarks	Qty	Model
		limited-slip differential			G50.03/04/05 G50.10/52
1	950 332 053 06	limited-slip differential 40 % 20 - 100 %		1	G50.03/04/05
1	950 332 053 02	limited-slip differential 20 - 100 %		1	G50.10/52
2	928 332 905 00	differential pinions 1 set		1	G50.03/04/05
2	950 332 905 01	differential pinions 1 set		1	G50.10/52
3	928 332 511 00	thrust ring		2	G50.03/04/05
3	950 332 511 00	thrust ring		1	G50.10/52
3A	950 332 513 00	thrust ring		1	G50.10/52
4	-	bevel pinion		4	
5	928 332 541 00	differential shaft		2	G50.03/04/05
5	950 332 541 01	differential shaft		1	G50.10/52
5A	950 332 543 01	differential shaft		1	G50.10/52
6	-	shaft bevel gear		2	
7	928 332 279 01	threaded disc		2	G50.03/04/05
7	950 332 279 71	threaded disc		2	G50.10/52
8	901 332 561 11	thrust washer		2	G50.03/04/05
8	950 332 561 00	thrust washer		2	G50.10/52
9	928 332 551 00	inner disc		2	G50.03/04/05
9	950 332 551 02	inner disc 2,6 MM		4	G50.10/52
10	917 332 552 10	disc with external splines 1,9 MM		4	G50.03/04/05
10	917 332 552 11	disc with external splines 2,0 MM		4	G50.03/04/05
10	917 332 552 12	disc with external splines 2,1 MM		2	G50.03/04/05
10	950 332 552 00	disc with external splines 1,3 MM		4	G50.10/52

Pos	Part Number	Name	Remarks	Qty	Model
10	950 332 552 01	disc with external splines 1,4 MM		4	G50.10/52
10	950 332 552 02	disc with external splines 1,5 MM		4	G50.10/52
10	950 332 552 03	disc with external splines 1,6 MM		4	G50.10/52
11	N 014 765 2	pan-head screw M 6 X 10		2	
12	928 332 555 20	cup spring		2	
13	950 332 209 01	joint flange		2	
14	928 332 276 05	hexagon-head bolt		12	
		- -- E N D -- -			

Pos	Part Number	Name	Remarks	Qty	Model

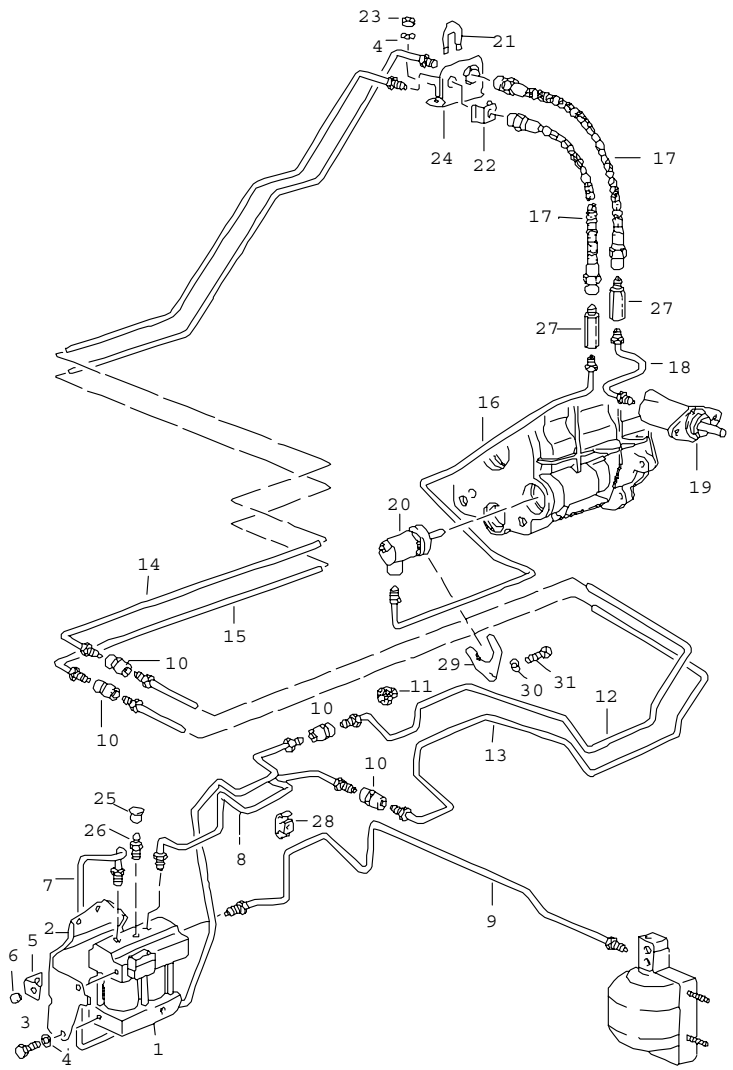

Pos	Part Number	Name	Remarks	Qty	Model
		lock control			G64.00/01/02
1	964 315 013 50	control valve		1	
2	964 315 115 00	support		1	
3	999 072 005 09	hexagon-head bolt M 6 X 12		4	
4	N 011 524 7	washer A 6,4		4	
5	999 591 930 40	support		1	
6	999 703 183 40	buffer		1	
7	964 315 341 50	pressure line		1	
8	964 315 342 51	pressure line		1	
9	964 315 301 51	pressure line		1	
10	914 355 661 00	intermediate piece		4	
11	951 355 755 00	rubber sleeve		2	
12	964 315 343 02	pressure line		1	
13	964 315 344 52	pressure line		1	
14	964 315 345 00	pressure line		1	
15	964 315 346 00	pressure line		1	
16	964 315 376 04	pressure line		1	
17	964 315 061 00	hose line		2	
18	964 315 375 02	pressure line		1	
19	928 332 775 12	slave cylinder		1	
20	964 339 775 07	slave cylinder		1	
21	113 611 715 A	brake hose bracket		2	
22	803 611 715	retainer spring		2	
23	900 910 010 09	lock nut M 6		2	
24	964 315 503 00	support		1	
25	930 351 927 00	dust boot		1	
26	930 351 919 00	ventilation valve		1	
27	928 315 211 02	pressure valve		2	

Pos	Part Number	Name	Remarks	Qty	Model	Pos	Part Number	Name	Remarks	Qty	Model
28	811 611 797	clip		11							
29	964 339 770 01	retaining bracket		1							
30	900 031 011 02	washer 6,4		1							
31	900 067 008 02	pan-head screw M 6 X 12		1							
		- -- E N D -- -									

Model	Year	MG	SG	Illustration	Restrictions	Update			
964	94	3	05	305-20		194	17:43	24.11.2005	PORSCHE PET PORSCHE

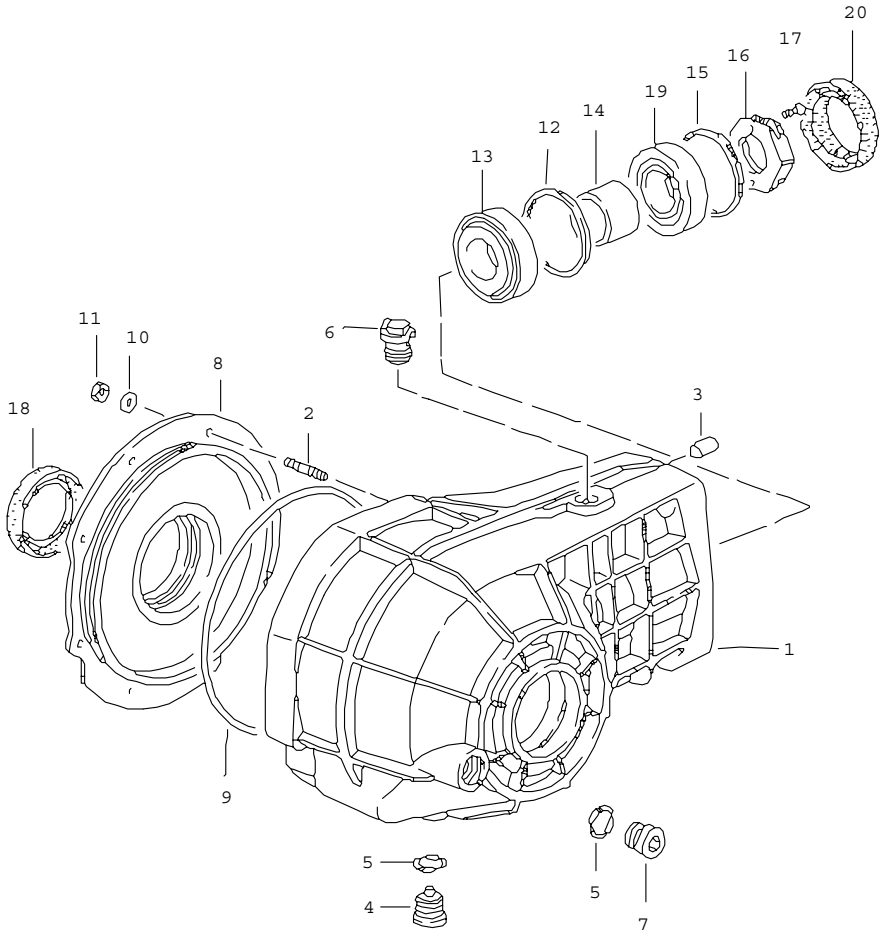

Pos	Part Number	Name	Remarks	Qty	Model
		front-axle final drive			CARRERA 4
-	964 349 010 00	transmission 31:9 ready for installation		1	
1	964 337 910 05	transmission case		1	
2	999 062 009 02	stud M 8 X 28		8	
3	900 197 057 01	roll pin 12 X 16		2	
4	999 063 008 02	screw plug M 22 X 1,5		1	
5	900 123 011 30	sealing ring A 22 X 27		2	
6	964 337 304 01	bleeder		1	
7	900 219 001 30	screw plug M 22 X 1,5		1	
8	964 337 311 01	transmission cover		1	
9	999 701 745 40	o-ring 186 X 3,5		1	
10	900 025 007 02	washer A 8,4		8	
11	900 076 025 02	hexagon nut M 8		8	
12	959 349 310 00	adjusting shim 0,1 MM		X	
12	959 349 310 01	adjusting shim 0,15 MM		X	
12	959 349 310 02	adjusting shim 0,20 MM		X	
12	959 349 310 03	adjusting shim 0,25 MM		X	
12	959 349 310 04	adjusting shim 0,30 MM		X	
12	959 349 310 07	adjusting shim 1.00 MM		X	
12	959 349 310 08	adjusting shim 1.30 MM		X	

Pos	Part Number	Name	Remarks	Qty	Model
13	999 059 086 00	taper roller bearing 34,925		1	
14	964 349 312 00	spacer sleeve		1	
15	964 349 311 00	adjusting shim 0,15 MM		X	
15	964 349 311 01	adjusting shim 0,20 MM		X	
15	964 349 311 02	adjusting shim 0,25 MM		X	
15	964 349 311 03	adjusting shim 0,30 MM		X	
15	964 349 311 04	adjusting shim 0,40 MM		X	
15	964 349 311 05	adjusting shim 0,60 MM		X	
15	964 349 311 06	adjusting shim 1,00 MM		X	
15	964 349 311 07	adjusting shim 1,50 MM		X	
15	964 349 311 08	adjusting shim 2,00 MM		X	
16	999 084 077 00	hexagon nut M 33 X 1,5		1	
17	900 119 022 02	pan-head screw M 5 X 8		2	
18	999 113 347 40	shaft seal 48 X 68 X 10		2	
19	999 059 096 00	taper roller bearing 33,338		1	
20	999 113 352 40	shaft seal 42 X 72 X 10		1	
		- -- E N D -- -			

Pos	Part Number	Name	Remarks	Qty	Model

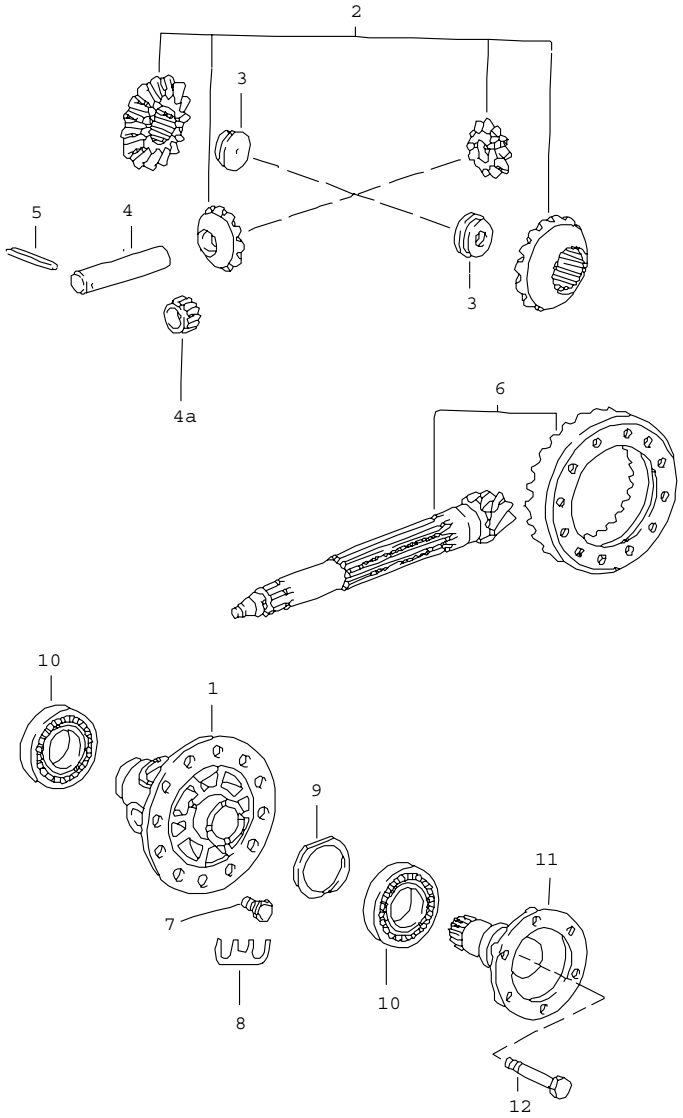

Pos	Part Number	Name	Remarks	Qty	Model
		front-axle final drive differential			CARRERA 4
1	950 332 212 01	differential housing		1	
2	950 332 902 00	differential pinions 1 set		1	
3	928 332 279 03	threaded disc		2	
4	928 332 207 07	differential bolt		1	
4A	999 201 237 00	needle cage 18 X 22 X 45		2	
5	900 309 035 00	roll pin		1	
6	964 349 911 01	ring gear and pinion shaft 31 : 9		1	
7	928 332 276 05	hexagon-head bolt		12	
8	950 332 285 00	tab washer		6	
9	950 332 268 00	adjusting ring 0,25 MM		X	
9	950 332 268 01	adjusting ring 1,6 MM		X	
9	950 332 268 02	adjusting ring 1,7 MM		X	
9	996 332 266 56	adjusting ring 1,8 MM		X	
9	950 332 268 04	adjusting ring 1,9 MM		X	
9	950 332 268 05	adjusting ring 2,0 MM		X	
9	950 332 268 06	adjusting ring 2,1 MM		X	
9	950 332 268 07	adjusting ring 2,2 MM		X	
9	950 332 268 08	adjusting ring 2,3 MM		X	
9	950 332 268 09	adjusting ring 2,4 MM		X	
9	950 332 268 10	adjusting ring 2,5 MM		X	

Pos	Part Number	Name	Remarks	Qty	Model	Pos	Part Number	Name	Remarks	Qty	Model
9	950 332 268 11	adjusting ring 2,6 MM		X							
9	950 332 268 12	adjusting ring 2,7 MM		X							
9	996 332 266 76	adjusting ring 2,8 MM		X							
9	950 332 268 14	adjusting ring 2,9 MM		X							
9	996 332 266 50	adjusting ring 3,0 MM		X							
9	950 332 268 16	adjusting ring 3,1 MM		X							
10	999 059 066 01	taper roller bearing 50 X 80 X 20		2							
11	964 332 209 01	joint flange		2							
12	N 010 472 4	hexagon-head bolt M 10 X 85		2							
		- -- E N D -- -									

Model	Year	MG	SG	Illustration	Restrictions	Update	17:44	24.11.2005	PORSCHE PET PORSCHE
964	94	3	07	307-00		194			

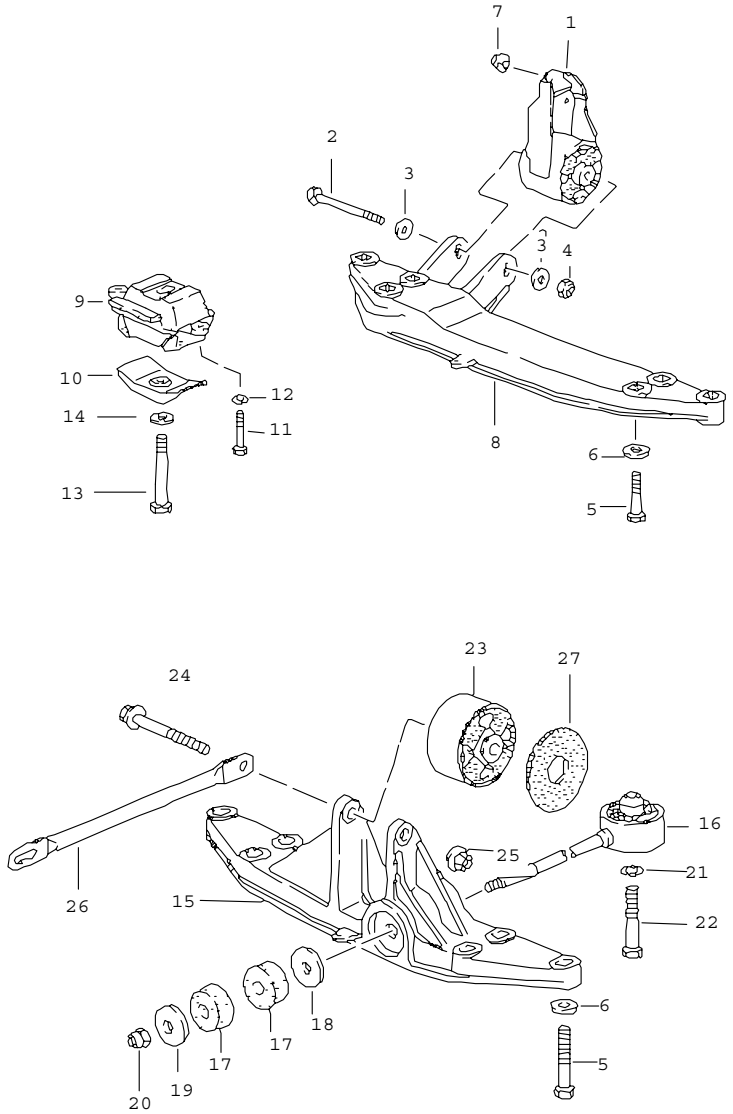

Pos	Part Number	Name	Remarks	Qty	Model
		transmission suspension			
		G64.00/01/02			
1	964 375 023 01	bearing bracket		1	
2	900 074 292 02	hexagon-head bolt M10 X 100		1	
3	999 025 195 02	washer 10,3 X 25 X 3		2	
4	900 910 031 09	lock nut M10		1	
5	N 040 241 1	hexagon-head bolt M10 X 60		6	
6	999 025 196 02	washer 10,3 X 28 X 5		6	
7	900 380 007 09	hexagon nut M10		3	
8	964 375 313 01	bracket		1	
9	964 375 053 01	bearing bracket		1	
10	964 375 183 01	stop		1	
11	900 074 134 02	hexagon-head bolt M8 X 45		2	
12	900 025 007 02	washer A 8,4		2	
13	N 010 183 3	hexagon-head bolt M12 X 1,5 X 75		1	
14	999 025 215 02	washer 12,1 X 26/26		1	
		G50.03/04/05 G50.10/52			
15	964 375 309 04	transmission carrier		1	
16	964 375 070 03	bracket		1	
17	964 375 211 01	rubber buffer		2	
18	999 025 182 02	washer 13,2 X 44 X 5		1	
19	999 025 181 02	washer 10,1 X 44 X 5		1	

Pos	Part Number	Name	Remarks	Qty	Model
20	N 021 130 3	lock nut VM 10		1	
21	900 025 009 02	washer A 13		1	
22	N 010 165 3	hexagon-head bolt M 12 X 1,5 X 65		1	
23	964 375 055 02	transmission mounting		1 1	G50.03/04/05 G50.52
23	964 375 055 80	transmission mounting		1	G50.10
24	900 378 027 02	hexagon-head bolt M 12 X 1,5 X 95		1	
25	900 380 010 09	lock nut M 12 X 1,5		1	
26	993 504 621 00	strut		2	
27	964 375 255 00	stop		2	
--	900 075 199 02	hexagon-head bolt M 12 X 22		2	
--	900 025 009 02	washer A 13		2	
		- -- E N D -- -			

Pos	Part Number	Name	Remarks	Qty	Model

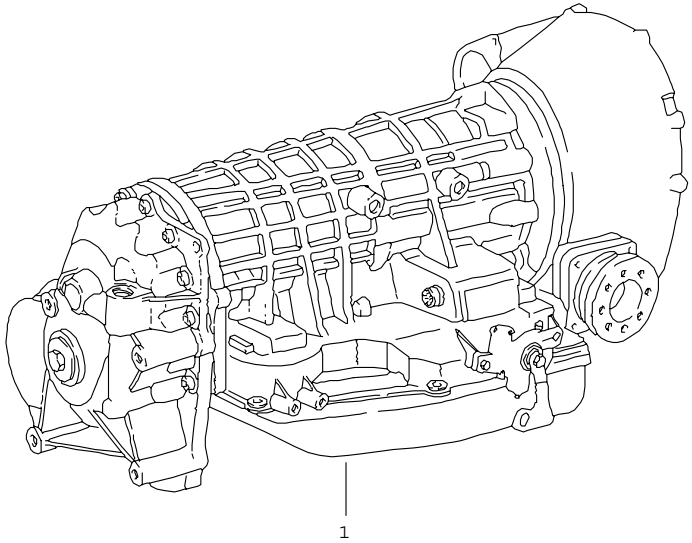

Pos	Part Number	Name	Remarks	Qty	Model
		TIPTRONIC replacement transmission			A50.01/02/03
(1)	> 943 300 010 01	transmission	-91	1	A50.01
1	> 943 300 010 02	transmission	92-	1	A50.02
1	943 300 010 03	transmission	92-	1	A50.03
		- -- E N D -- -			

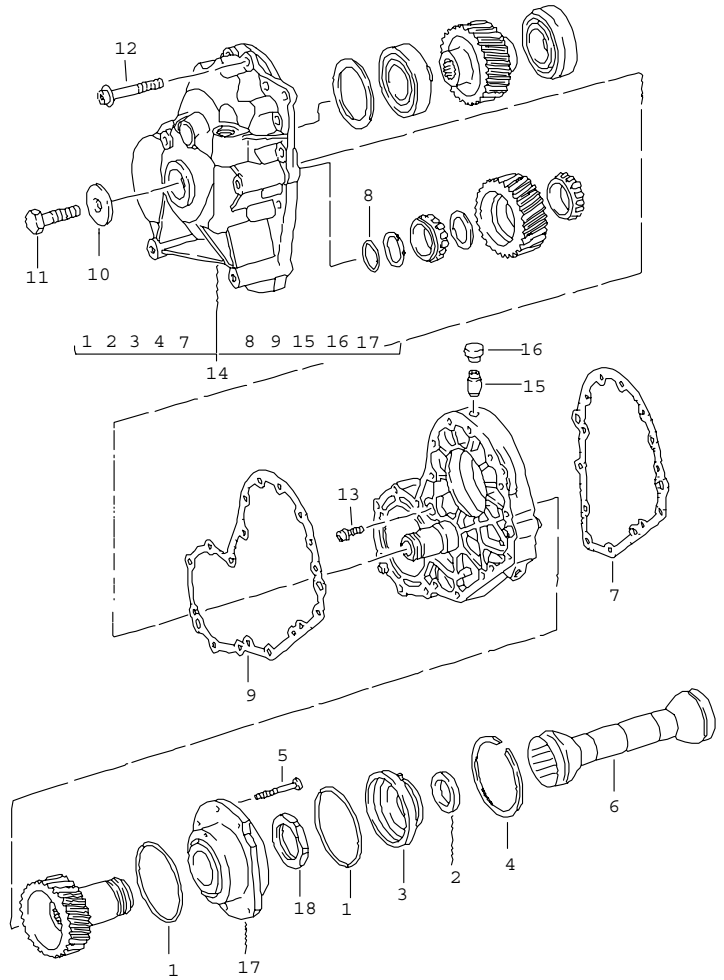

Pos	Part Number	Name	Remarks	Qty	Model
		TIPTRONIC spur gears intermediate plate			A50.01/02/03
1	943 397 022 00	round seal		2	
2	943 397 023 01	shaft seal 30 X 45 X 8		1	
3	943 321 861 00	housing		1	
4	943 397 029 00	snap ring SB 86		1	
5	943 397 024 00	pan-head screw M 8 X 55		1	
6	943 321 831 00	protective tube		1	
7	943 321 150 03	gasket		1	
8	943 397 028 00	round seal		1	
9	943 321 138 01	gasket		1	
10	943 397 025 00	washer		1	
11	N 010 275 3	hexagon-head bolt M 10 X 35		1	
12	943 397 026 00	pan-head screw		11	
13	943 397 027 00	pan-head screw		2	
(14)	A 943 300 911 00	transmission cover complete with spur gears	-91	1	
14	943 300 911 01	transmission cover complete with spur gears	92-	1	
15	943 321 311 00	breather pipe		1	
16	943 321 312 01	bleeder		1	
17	943 302 083 04	bearing sleeve		1	
18	964 302 270 00	lock nut		1	
25	943 321 312 01	bleeder		1	
		- -- E N D -- -			

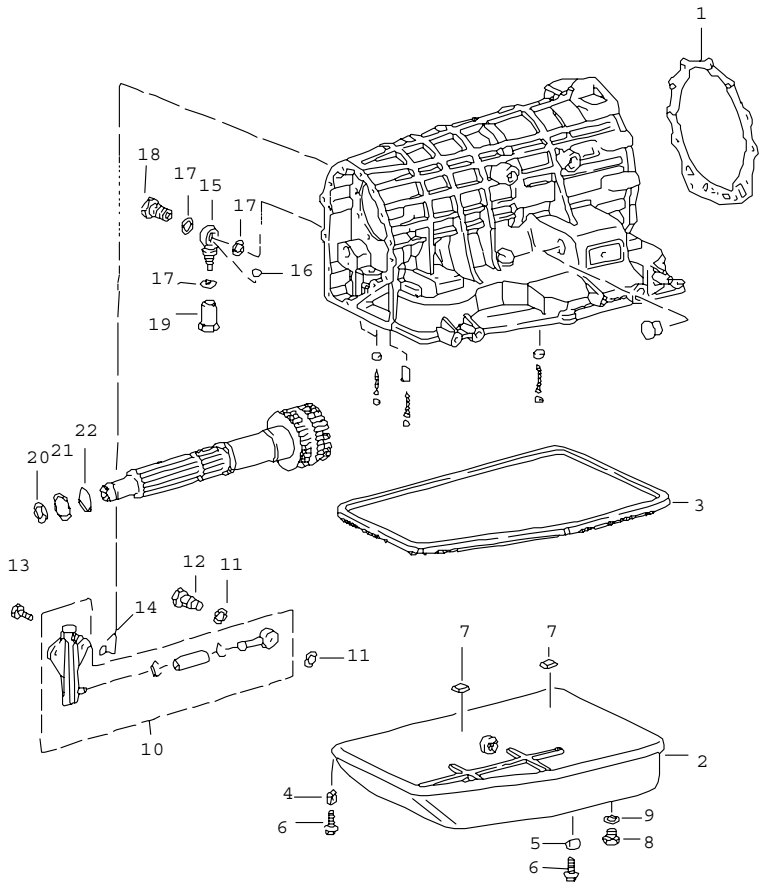

Pos	Part Number	Name	Remarks	Qty	Model
		TIPTRONIC transmission case oil pan			A50.01/02/03
1	943 321 134 01	gasket		1	
2	943 321 025 06	oil pan		1	
3	943 321 123 06	gasket		1	
4	943 321 161 01	retaining bracket		4	
5	943 321 163 00	retaining bracket		2	
6	943 397 001 00	hexagon-head bolt M 6		6	
7	943 321 119 00	magnet		2	
8	900 219 002 01	screw plug M 14 X 1,5		1	
9	900 123 104 30	sealing ring A 14 X 18		1	
10	943 321 027 00	container		1	
11	900 123 116 30	sealing ring A 12 X 15,5		2	
12	N 021 071 2	banjo bolt 8		1	
13	900 236 014 02	screw M 6 X 4		2	
14	943 397 032 00	round seal		1	
15	943 307 101 00	connection piece		1	
16	N 025 657 1	ball 6 MM		1	
17	900 123 007 30	sealing ring A 14 X 18		3	
18	N 021 074 1	banjo bolt LL 10		1	
19	960 307 163 00	screw plug		1	
20	943 397 037 00	round seal		1	
21	999 041 022 00	circlip 27 X 1,2		1	
22	943 397 035 00	sealing ring		1	

Pos	Part Number	Name	Remarks	Qty	Model	Pos	Part Number	Name	Remarks	Qty	Model
		- -- E N D -- -									

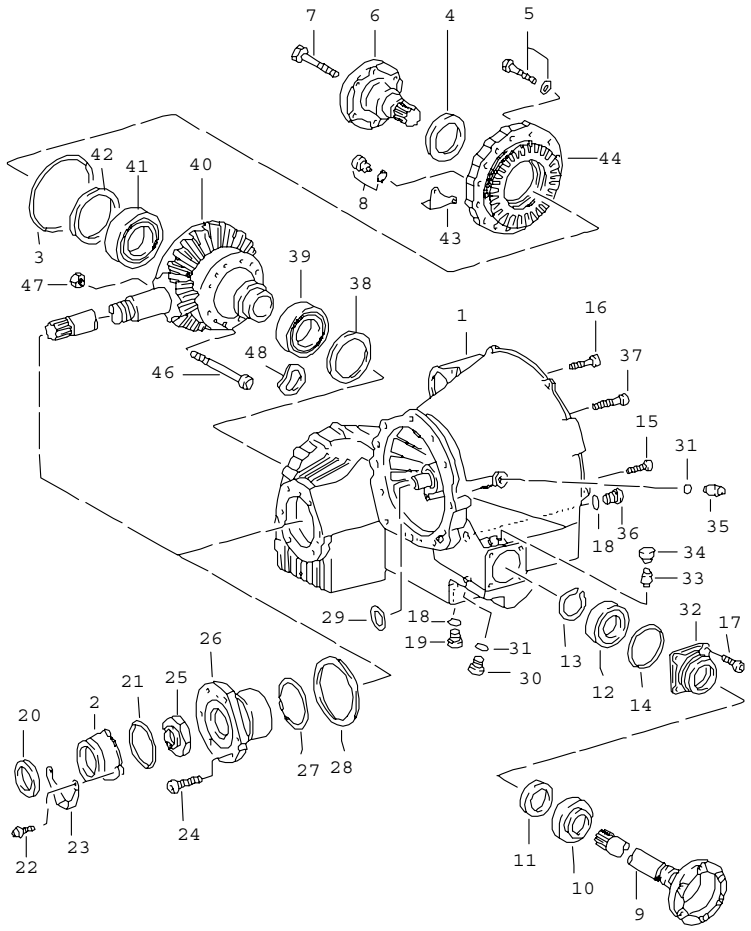

Pos	Part Number	Name	Remarks	Qty	Model
		TIPTRONIC differential differential housing			A50.01/02/03
1	943 321 041 00	rear axle housing		1	
2	943 321 851 00	housing		1	
3	943 397 020 00	round seal		1	
4	943 397 019 01	shaft seal 48 X 68 X 10		1	
5	N 010 247 7	hexagon-head bolt M 8 X 35		11	
6	943 332 210 01	joint flange	/R	1	
7	900 074 064 02	hexagon-head bolt M 10 X 60		1	
8	900 219 001 30	screw plug M 22 X 1,5		1	
9	943 332 209 01	joint flange	/L	1	
10	943 332 207 01	protective ring		1	
11	943 397 021 01	shaft seal 40 X 55 X 10		1	
12	999 052 141 00	deep-groove ball bearing 35 X 62 X 14		1	
13	900 041 016 01	circlip 35 X 1,5		1	
14	943 397 017 00	round seal		1	
15	943 397 015 00	pan-head screw		3	
16	943 397 014 00	pan-head screw		6	
17	943 397 016 00	pan-head screw M 8 X 25		4	
18	900 123 118 30	sealing ring A 22 X 27		3	
19	999 063 008 02	screw plug M 22 X 1,5		1	
20	943 397 036 00	shaft seal		1	
21	943 397 034 00	round seal		1	
22	943 397 012 00	pan-head screw M 6 X 15		3	

Pos	Part Number	Name	Remarks	Qty	Model
23	964 119 181 01	support		1	
24	943 397 038 00	pan-head screw M 10 X 35		6	
25	999 034 014 00	lock nut		1	
26	943 302 084 04	bearing sleeve		1	
27	999 701 964 40	round seal		1	
28	943 302 299 20	adjusting shim 1,30 MM		X	
28	943 302 299 21	adjusting shim 1,35 MM		X	
28	943 302 299 22	adjusting shim 1,40 MM		X	
28	943 302 299 23	adjusting shim 1,45 MM		X	
28	943 302 299 24	adjusting shim 1,50 MM		X	
28	943 302 299 25	adjusting shim 1,55 MM		X	
28	943 302 299 26	adjusting shim 1,60 MM		X	
28	943 302 299 27	adjusting shim 1,65 MM		X	
28	943 302 299 28	adjusting shim 1,70 MM		X	
28	943 302 299 29	adjusting shim 1,75 MM		X	
28	943 302 299 30	adjusting shim 1,80 MM		X	
28	943 302 299 31	adjusting shim 1,85 MM		X	
28	943 302 299 32	adjusting shim 1,90 MM		X	
28	943 302 299 33	adjusting shim 1,95 MM		X	
28	943 302 299 34	adjusting shim 2,00 MM		X	
29	943 323 291 00	adjusting shim 0,80 MM		X	
29	943 323 291 01	adjusting shim 1,00 MM		X	
29	943 323 291 02	adjusting shim 1,20 MM		X	
29	943 323 291 03	adjusting shim 1,40 MM		X	
29	943 323 291 04	adjusting shim 1,60 MM		X	
29	943 323 291 05	adjusting shim 1,80 MM		X	
29	943 323 291 06	adjusting shim 2,00 MM		X	
29	943 323 291 07	adjusting shim 2,20 MM		X	
29	943 323 291 08	adjusting shim 2,40 MM		X	
29	943 323 291 09	adjusting shim 2,60 MM		X	
29	943 323 291 10	adjusting shim 2,80 MM		X	
30	900 219 002 02	screw plug M 14 X 1,5		1	
31	900 123 104 30	sealing ring A 14 X 18		1	
32	943 321 145 06	housing		1	
33	943 321 311 00	breather pipe		1	
34	943 321 312 00	bleeder		1	
35	N 900 450 01	connection piece screw plug M 22 X 1,5		2 1	
36	-	cap		1	
37	943 397 040 00	pan-head screw		3	
38	943 332 218 10	adjusting shim 1,00 MM		X	
38	943 332 218 11	adjusting shim 1,05 MM		X	
38	943 332 218 12	adjusting shim 1,10 MM		X	

Pos	Part Number	Name	Remarks	Qty	Model
38	943 332 218 13	adjusting shim 1,15 MM		X	
38	943 332 218 14	adjusting shim 1,20 MM		X	
38	943 332 218 15	adjusting shim 1,25 MM		X	
38	943 332 218 16	adjusting shim 1,30 MM		X	
38	943 332 218 17	adjusting shim 1,35 MM		X	
38	943 332 218 18	adjusting shim 1,40 MM		X	
38	943 332 218 19	adjusting shim 1,45 MM		X	
38	943 332 218 20	adjusting shim 1,50 MM		X	
38	943 332 218 21	adjusting shim 1,55 MM		X	
38	943 332 218 22	adjusting shim 1,60 MM		X	
38	943 332 218 23	adjusting shim 1,65 MM		X	
38	943 332 218 24	adjusting shim 1,70 MM		X	
38	943 332 218 25	adjusting shim 1,75 MM		X	
38	943 332 218 26	adjusting shim 1,80 MM		X	
38	943 332 218 27	adjusting shim 1,85 MM		X	
38	943 332 218 28	adjusting shim 1,90 MM		X	
38	943 332 218 29	adjusting shim 1,95 MM		X	
38	943 332 218 30	adjusting shim 2,00 MM		X	
39	999 059 112 00	taper roller bearing		1	
40	943 332 091 00	differential 33 : 9		1	
41	999 059 111 00	taper roller bearing		1	
42	943 332 219 10	adjusting shim 1,00 MM		X	
42	943 332 219 11	adjusting shim 1,05 MM		X	
42	943 332 219 12	adjusting shim 1,10 MM		X	
42	943 332 219 13	adjusting shim 1,15 MM		X	
42	943 332 219 14	adjusting shim 1,20 MM		X	
42	943 332 219 15	adjusting shim 1,25 MM		X	
42	943 332 219 16	adjusting shim 1,30 MM		X	
42	943 332 219 17	adjusting shim 1,35 MM		X	
42	943 332 219 18	adjusting shim 1,40 MM		X	
42	943 332 219 19	adjusting shim 1,45 MM		X	
42	943 332 219 20	adjusting shim 1,50 MM		X	
42	943 332 219 21	adjusting shim 1,55 MM		X	
42	943 332 219 22	adjusting shim 1,60 MM		X	
42	943 332 219 23	adjusting shim 1,65 MM		X	
42	943 332 219 24	adjusting shim 1,70 MM		X	
42	943 332 219 25	adjusting shim 1,75 MM		X	
42	943 332 219 26	adjusting shim 1,80 MM		X	
42	943 332 219 27	adjusting shim 1,85 MM		X	
42	943 332 219 28	adjusting shim 1,90 MM		X	

Pos	Part Number	Name	Remarks	Qty	Model	Pos	Part Number	Name	Remarks	Qty	Model
43	964 119 182 00	support		1							
44	943 321 134 07	transmission cover		1							
45	-	screw plug 22 X 1,5		1							
46	943 332 750 06	locking screw		12							
47	900 076 078 01	hexagon nut M 10 X 1,25		12							
48	943 332 101 00	spring washer GEWELLT POS. 46/47/48 NUR FUER KD.		2							
		- -- E N D -- -									

Model	Year	MG	SG	Illustration	Restrictions	Update			
964	94	3	20	320-04		194	17:45	24.11.2005	PORSCHE PET PORSCHE

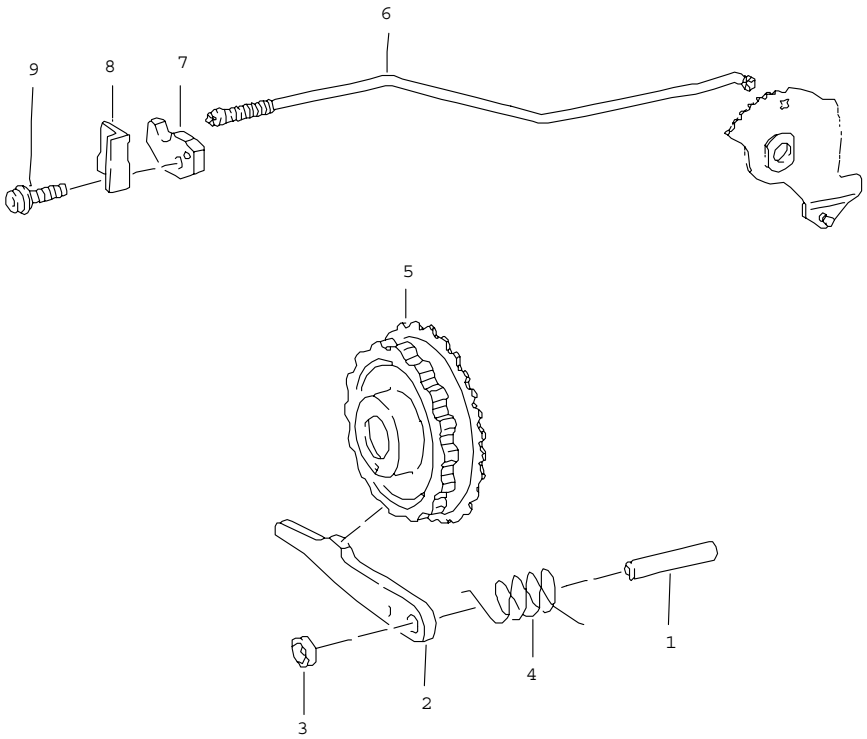

Pos	Part Number	Name	Remarks	Qty	Model
		TIPTRONIC parking lock			A50.01/02/03
1	943 303 107 00	bolt		1	
2	943 303 111 00	stop		1	
3	943 303 113 00	bush		1	
4	943 303 109 00	spring		1	
5	943 303 115 00	parking lock		1	
6	943 303 101 00	connecting rod		1	
7	943 303 103 00	guide piece		1	
8	943 303 105 00	guide plate		1	
9	943 397 039 00	pan-head screw		1	
		- -- E N D -- -			

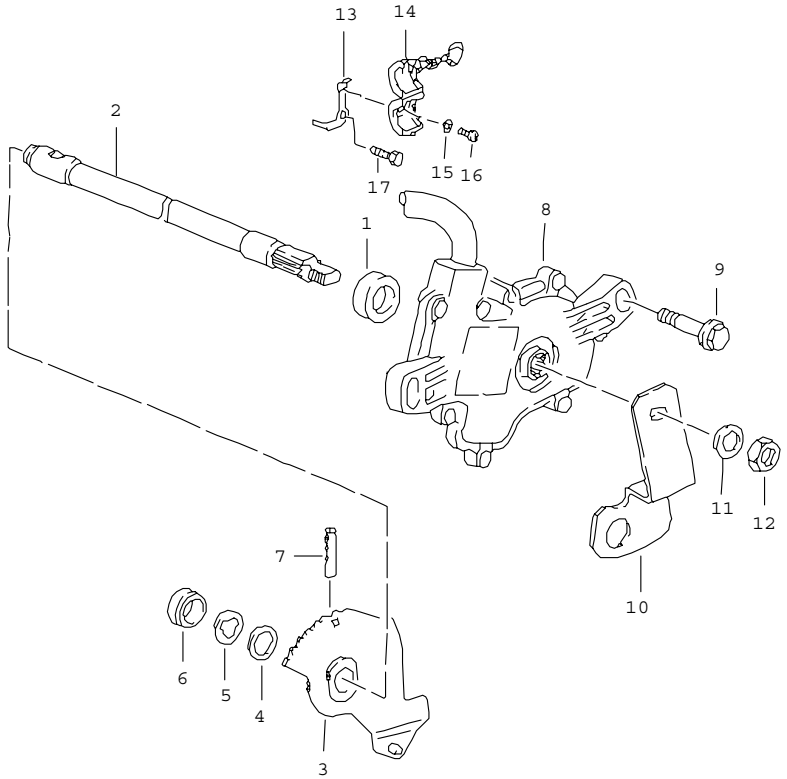

Pos	Part Number	Name	Remarks	Qty	Model
		TIPTRONIC selector switch			A50.01/02/03
1	943 397 018 03	shaft seal 10 X 18 X 5		1	
2	943 325 101 00	shaft		1	
3	943 325 010 00	locking segment		1	
4	900 234 029 00	shim 9 X 15 X 1,0		1	
5	900 041 037 01	circlip 9 X 1		1	
6	943 397 031 00	protection cap		1	
7	900 095 107 01	roll pin 5 X 22		1	
8	964 613 212 00	switch	-91	1	A50.01
8	964 613 212 01	switch	92-	1	A50.02/03
9	900 378 013 09	hexagon-head bolt M 6 X 25		2	
10	943 426 263 04	selector lever		1	
11	900 031 001 02	washer 8,4		1	
12	943 397 008 00	hexagon nut M 8 X 1		1	
13	964 612 471 00	support		1	
14	964 612 431 00	support		1	
15	900 025 002 02	washer A 4,3		1	
16	900 014 002 02	pan-head screw AM 4 X 6		1	
17	N 040 268 1	hexagon-head bolt M 6 X 14		1	
		- -- E N D -- -			

Model	Year	MG	SG	Illustration	Restrictions	Update	17:45	24.11.2005	PORSCHE PET PORSCHE
964	94	3	30	330-00		194			

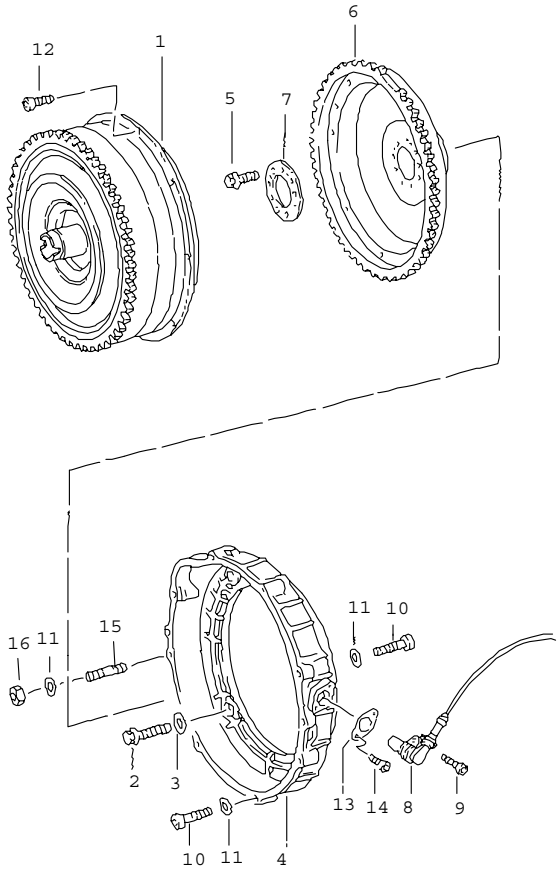

Pos	Part Number	Name	Remarks	Qty	Model
		TIPTRONIC converter			
1	943 316 001 00	converter		1	
1	U 943 316 001 01	converter		1	
2	999 073 023 08	torx screw M 10 X 35		4	
3	900 025 008 09	washer A 10,5		4	
4	943 116 101 01	converter housing		1	
5	999 073 024 08	torx screw M 10 X 1,25		9	
6	943 116 075 01	drive plate		1	
7	943 116 153 02	perforated plate		1	
8	911 606 217 03	pulse sender		1	
9	999 218 005 02	pan-head screw M 6 X 16		1	
10	900 067 081 02	pan-head screw M 8 X 35		8	
11	900 031 001 02	washer 8,4		8	
12	900 067 280 08	pan-head screw M 6 X 16		8	
13	964 606 217 00	shim 0,1 MM		X	
13	964 606 217 02	shim 0,4 MM		X	
14	N 014 740 2	pan-head screw M 6 X 16		1	
15	999 062 009 02	stud BM 8 X 28		1	
16	900 076 025 02	hexagon nut M 8		1	
		- -- E N D -- -			

Model	Year	MG	SG	Illustration	Restrictions	Update	17:46	24.11.2005	PORSCHE PET PORSCHE
964	94	3	30	330-01		194			

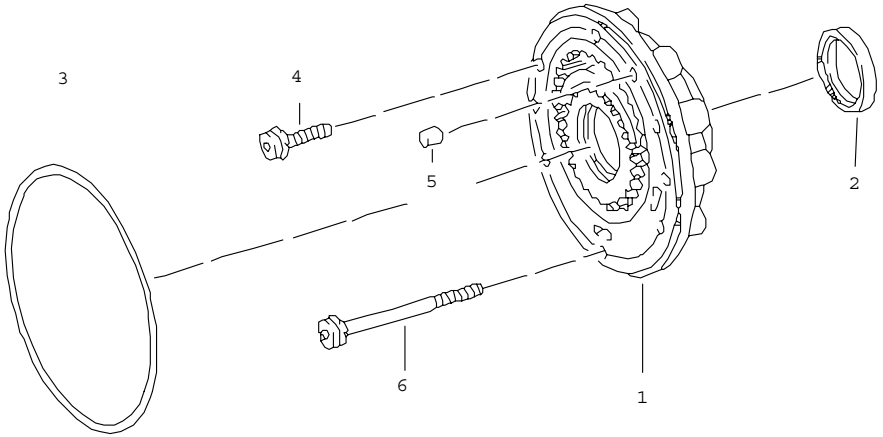

Pos	Part Number	Name	Remarks	Qty	Model
		TIPTRONIC oil pump			A50.01/02/03
1	943 307 001 00	oil pump		1	
2	943 397 010 01	shaft seal 40 X 52 X 7		1	
3	943 397 011 00	round seal		1	
4	943 397 013 00	pan-head screw M 6 X 30		7	
5	943 397 030 00	sleeve		1	
6	943 397 006 00	pan-head screw M 6 X 80		1	
		- -- E N D -- -			

Model	Year	MG	SG	Illustration	Restrictions	Update			
964	94	3	40	340-00		194	17:46	24.11.2005	PORSCHE PET PORSCHE

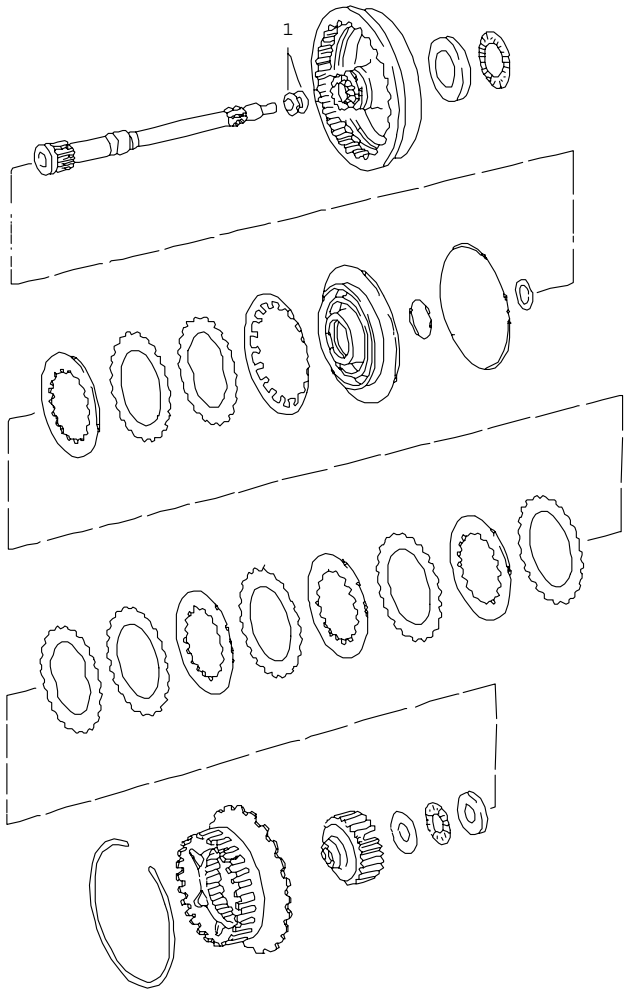

Pos	Part Number	Name	Remarks	Qty	Model
		TIPTRONIC drive shaft			A50.01/02/03
1	943 397 033 00	sealing ring		2	
		- -- E N D -- -			

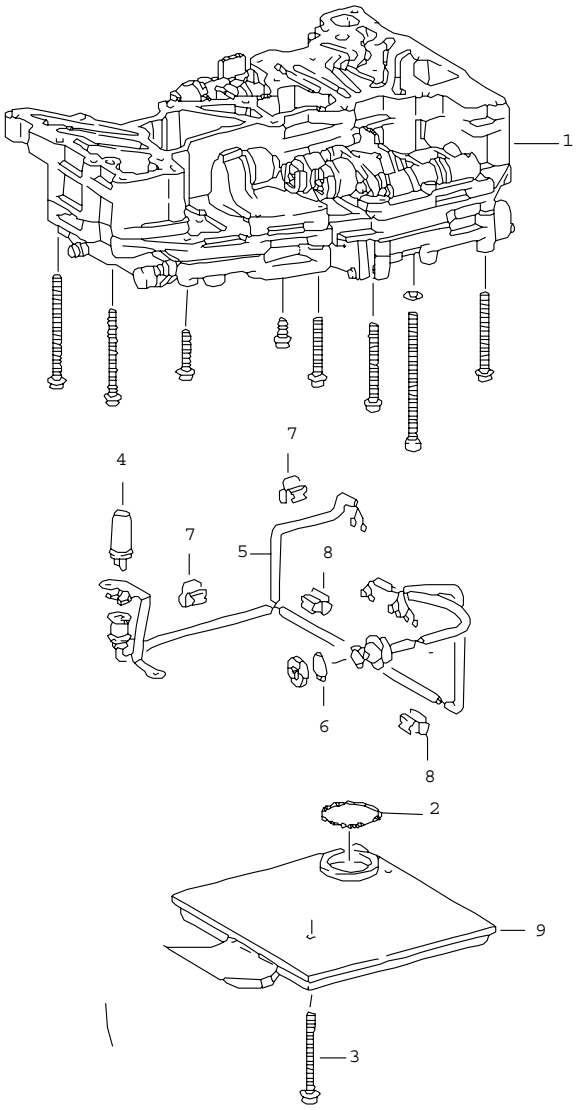

Pos	Part Number	Name	Remarks	Qty	Model
		TIPTRONIC oil strainer inductive transmitter mounting parts for switch unit			A50.01/02/03
1	943 325 001 00	switch unit	-91	1	A50.01
1	943 325 001 01	switch unit	92-	1	A50.02/03
2	943 307 041 00	round seal		1	
3	943 397 003 00	pan-head screw M 6 X 65		5	
4	943 325 604 00	inductive transmitter		1	
5	943 325 605 01	wiring harness		1	
6	943 397 007 00	round seal 26,7X1,78		1	
7	943 325 606 00	cable terminal		2	
8	943 325 607 00	cable terminal		2	
9	943 307 011 02	oil strainer		1	
10	943 397 006 00	pan-head screw M 6 X 80		7	
11	943 397 005 00	pan-head screw M 6 X 60		3	
12	943 397 004 00	pan-head screw M 6 X 105		1	
13	943 397 044 00	pan-head screw M 5 X 30		1	
14	943 397 045 00	pan-head screw M 5 X 12		3	
15	943 397 043 00	pan-head screw M 5 X 45		6	
16	943 397 042 00	pan-head screw M 5 X 60		12	
17	N 012 226 5	spring washer B 6		1	
		- -- E N D -- -			

Model	Year	MG	SG	Illustration	Restrictions	Update			
964	94	3	40	340-02		194	17:46	24.11.2005	PORSCHE PET PORSCHE

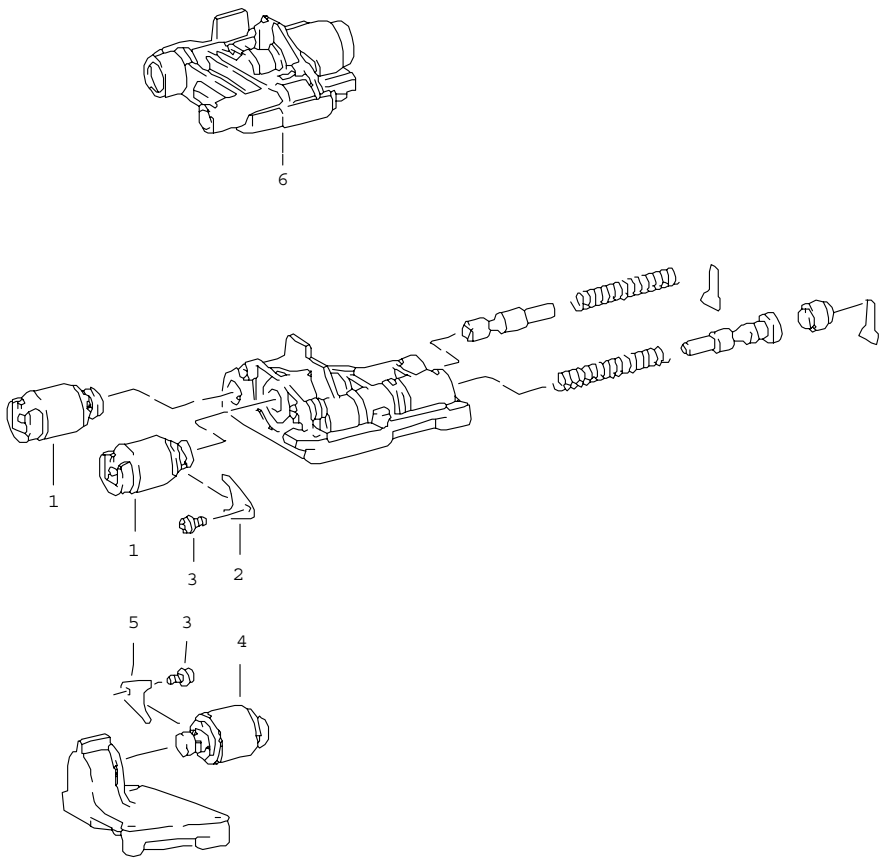

Pos	Part Number	Name	Remarks	Qty	Model
		TIPTRONIC solenoid valve			A50.01/02/03
1	943 325 601 00	solenoid valve		2	
2	943 325 111 00	retaining bracket		2	
3	943 397 009 00	pan-head screw M5X10		3	
4	943 325 602 00	solenoid valve		1	
5	943 325 112 00	retaining bracket		1	
6	943 325 603 01	pressure regulator		1	
		- -- E N D -- -			

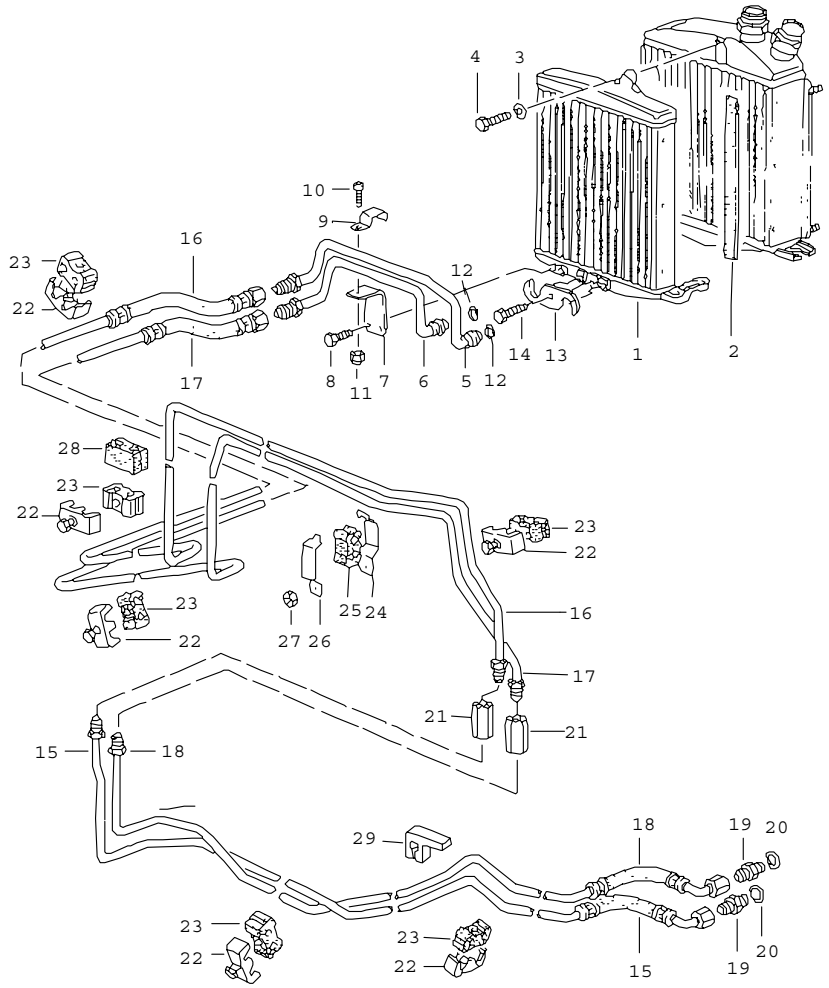

Pos	Part Number	Name	Remarks	Qty	Model
		TIPTRONIC atf cooler atf lines			A50.01/02/03
1	943 307 027 10	transmission oil cooler		1	
-	000 043 204 88	sealing strap roller with 10 meters 9 X 3		*	
2	-	260 MM		1	
3	900 151 003 02	washer A 6,4		1	
4	900 075 016 02	hexagon-head bolt M 6 X 22		1	
5	943 307 087 00	oil pipe		1	
6	943 307 088 00	oil pipe		1	
7	943 307 145 01	retaining bracket		1	
8	N 010 207 6	hexagon-head bolt M 5 X 12		2	
9	900 171 013 00	clamp 2 X 10		1	
10	N 100 534 01	pan-head screw M 4 X 12		1	
11	900 276 002 02	lock nut M 4		1	
12	999 701 951 40	o-ring 13 X 1,5		2	
13	943 307 143 00	latch		1	
14	N 010 217 9	hexagon-head bolt M 6 X 20		1	
15	943 307 070 01	oil pipe		1	
16	943 307 071 01	oil pipe		1	
17	943 307 073 01	oil pipe		1	
18	943 307 074 01	oil pipe		1	
19	N 900 450 01	connection piece A10		2	
20	900 123 007 30	sealing ring A14 X 18		2	

Pos	Part Number	Name	Remarks	Qty	Model	Pos	Part Number	Name	Remarks	Qty	Model
21	477 209 169	connecting piece		2							
22	928 356 555 00	clamp		9							
23	928 356 525 01	rubber mounting		9							
24	964 573 453 00	support		1							
25	964 573 455 00	spacer rubber		1							
26	964 573 463 00	support		1							
27	900 076 025 02	hexagon nut M 8		1							
28	943 307 321 00	sealing rubber		1							
29	943 307 322 00	rubber mounting		1							
		- -- E N D -- -									

Model	Year	MG	SG	Illustration	Restrictions	Update			
964	94	3	70	370-00		194	17:47	24.11.2005	PORSCHE PET PORSCHE

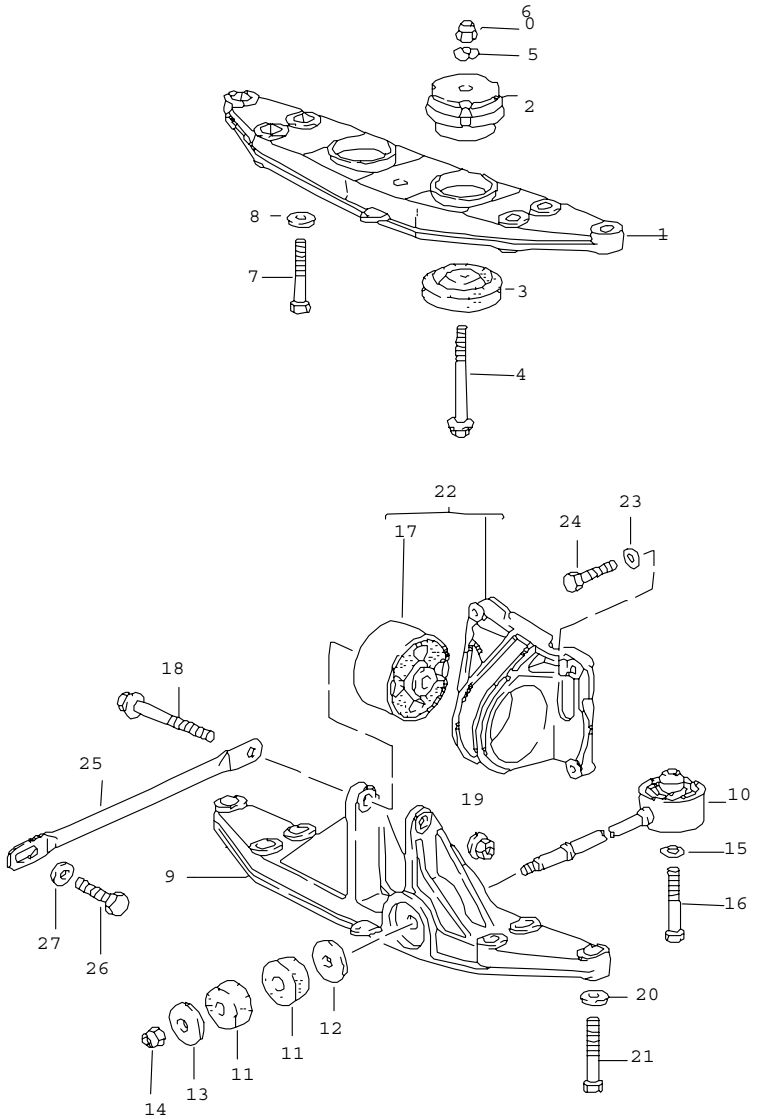

Pos	Part Number	Name	Remarks	Qty	Model
		TIPTRONIC transmission suspension			A50.01/02/03
		A50.01	-91		
1	964 375 309 03	transmission carrier		1	
2	964 375 055 03	transmission mounting		2	
3	964 375 057 00	stop plate		2	
4	900 378 023 02	hexagon-head bolt M12 X 1,5 X 100		2	
5	900 025 009 02	washer A 13		2	
6	N 022 141 1	lock nut M 12 X 1,5		2	
7	N 040 241 1	hexagon-head bolt M 10 X 60		6	
8	999 025 196 02	washer 10,3 X 28 X 5		6	
		A50.02/03			
9	964 375 309 04	transmission carrier	92-	1	
10	964 375 070 04	bracket		1	
11	964 375 211 01	rubber buffer		1	
12	999 025 182 02	washer 13,2 X 44 X 5		1	
13	999 025 181 02	washer 10,1 X 44 X 5		1	
14	N 021 130 3	lock nut VM 10		1	
15	900 025 009 02	washer A 13		3	
16	N 010 165 3	hexagon-head bolt M 12 X 1,5 X 65		1	
17	964 375 055 02	transmission mounting		1	
18	900 378 027 02	hexagon-head bolt M 12 X 1,5 X 95		1	
19	900 380 010 09	lock nut M 12 X 1,5		1	

Pos	Part Number	Name	Remarks	Qty	Model
20	999 025 196 02	washer 10,3 X 28 X 5		6	
21	N 040 241 1	hexagon-head bolt M10 X 60		6	
22	993 375 041 00	bracket		1	
23	900 025 007 02	washer A 8,4		4	
24	N 010 335 5	hexagon-head bolt M 8 X 35		4	
25	993 504 621 00	strut		2	
26	900 075 199 02	hexagon-head bolt M 12 X 22		2	
--	900 025 009 02	washer A 13		2	
		- -- E N D -- -			

Pos	Part Number	Name	Remarks	Qty	Model

Model	Year	MG	SG	Illustration	Restrictions	Update		
964	94	3	98	REP		194	9:49	25.11.2005

Pos	Part Number	Name	Remarks	Qty	Model
		set of seals			
>>	> 964 300 911 00	set of seals transmission comprising:		1	G64.00/01/02
-	999 113 347 40	shaft seal		2	
-	999 113 326 41	shaft seal		1	
-	900 123 011 30	sealing ring A 22 X 27		2	
-	999 701 745 40	o-ring		1	
-	950 301 151 01	cap		1	
-	950 301 191 01	gasket		1	
-	950 301 351 02	gasket		1	
-	964 301 051 01	sealing sleeve		1	
-	900 123 015 30	sealing ring A 30 X 36		1	
-	928 303 120 01	shaft seal		1	
-	999 113 386 40	sealing ring 30 X 47 X 7		1	
-	964 301 195 02	gasket		1	
-	999 701 734 40	sealing ring 29,5 X 1,5 N		1	
>>	> 964 300 912 00	set of seals transmission comprising:		1	G50.03/04/05 G50.10/52
-	999 113 326 41	shaft seal		1	
-	950 301 151 01	cap		1	
-	928 332 776 00	flange gasket		1	
-	900 123 011 30	sealing ring A 22 X 27		2	
-	999 113 347 40	shaft seal		2	
-	999 701 745 40	o-ring		1	
-	950 301 191 01	gasket		1	
-	950 301 351 02	gasket		1	
-	999 113 404 40	shaft seal		1	
-	999 701 734 40	sealing ring 29,5 X 1,5 N		1	

Model	Year	MG	SG	Illustration	Restrictions	Update		
964	94	3	98	REP		194	9:49	25.11.2005

Pos	Part Number	Name	Remarks	Qty	Model
-	999 701 387 40	o-ring 210 X 3,5		1	
-	900 123 043 30	sealing ring A 12 X 15		1	
-	964 116 911 00	repair kit for clutch comprising: pressure plate clutch plate clutch release bearing	-91	1 1 1 1	M64.01
-	964 116 911 01	repair kit for clutch comprising: pressure plate clutch plate clutch release bearing	92-	1 1 1 1	M64.01
		- -- E N D -- -			

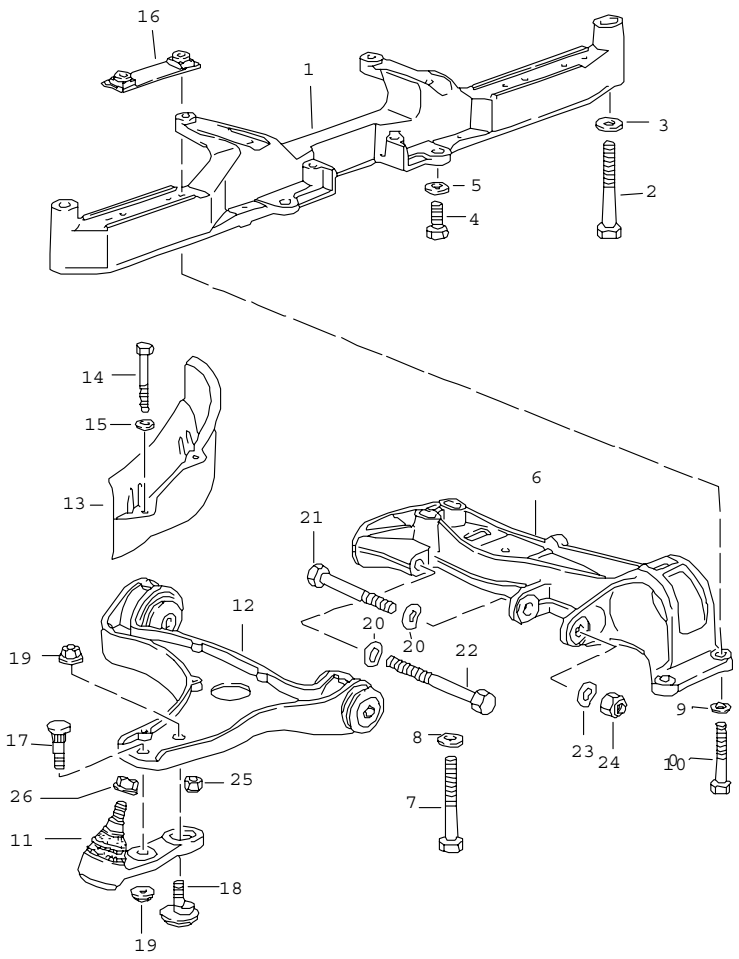

Pos	Part Number	Name	Remarks	Qty	Model
		cross member control arm			
1	964 341 101 05	cross member		1	
2	900 082 121 02	hexagon-head bolt 12 X 1,5 X 90		2	
3	901 333 143 01	washer		2	
4	900 075 041 09	hexagon-head bolt M 10 X 25		2	
5	999 025 076 09	washer 10,2 X 21 X 3		2	
6	964 341 111 21	side member	/L -92	1	
6	964 341 111 21	side member	/L 93-	1	
(6)	964 341 112 21	side member	/R -92	1	
(6)	964 341 112 21	side member	/R 93-	1	
7	900 082 020 09	hexagon-head bolt M 12 X 1,5 X 80		4	
8	901 333 143 01	washer 12,5 X 28 X 4		4	
9	900 025 008 09	washer A 10,5		4	
10	N 010 465 5	hexagon-head bolt M 10 X 65		4	
11	964 341 049 03	ball joint		2	
12	964 341 017 06	control arm	/L	1 1 1	CARRERA 2/4 TURBO/LOOK TURBO 3,6
(12)	964 341 018 06	control arm	/R	1 1 1	CARRERA 2/4 TURBO/LOOK TURBO 3,6
12	964 341 017 80	control arm	/L	1	CARRERA RS
(12)	964 341 018 80	control arm	/R	1	CARRERA RS
13	964 341 083 01	air duct	/L	1	
13	964 341 084 01	air duct	/R	1	
14	N 010 366 4	hexagon-head bolt		4	
15	N 011 666 7	washer		8	

Pos	Part Number	Name	Remarks	Qty	Model
16	964 341 015 00	plate		2	
17	964 341 465 02	knurled screw		2	
18	964 341 455 01	caster eccentric		2	
19	999 084 620 02	lock nut		4	
20	999 025 212 09	washer		4	
21	N 010 191 2	hexagon-head bolt		2	
22	900 082 118 09	hexagon-head bolt		2	
23	900 028 014 02	spring washer		4	
24	N 022 141 1	lock nut VM 12 X 1,5		4	
25	900 910 010 09	lock nut M 6		4	
26	900 380 010 09	lock nut		2	
		- -- E N D -- -			

Pos	Part Number	Name	Remarks	Qty	Model

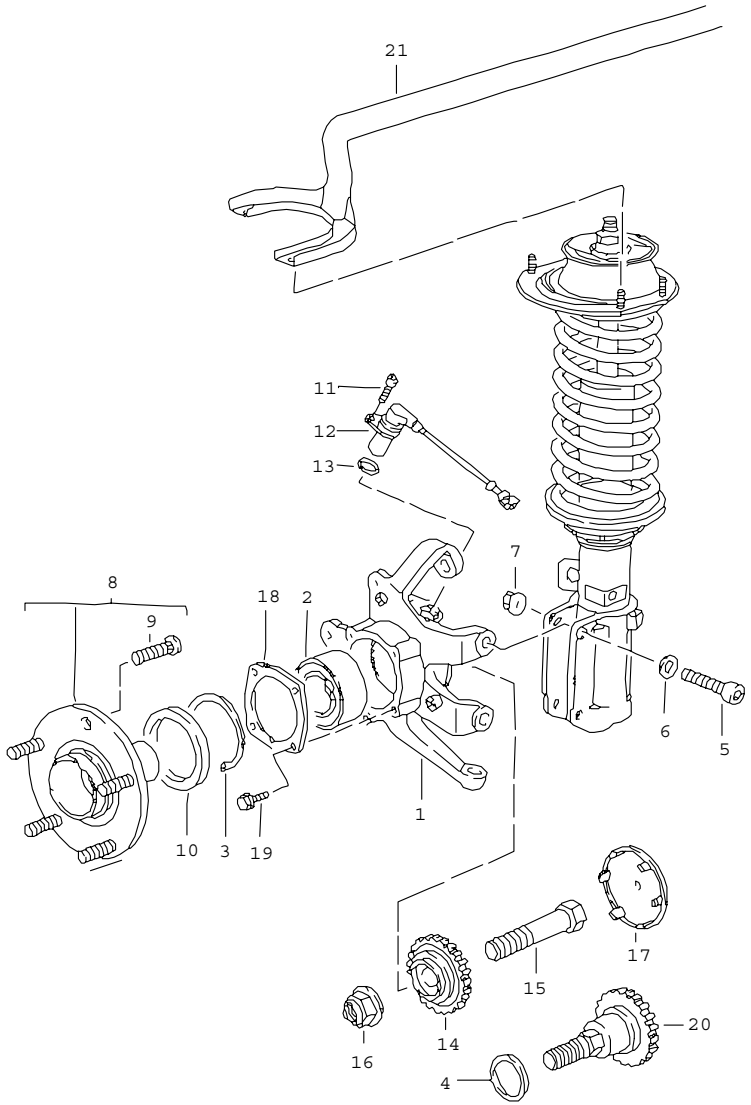

Pos	Part Number	Name	Remarks	Qty	Model
		wheel carrier wheel hub transverse strut see technical information group 4 10/89			TURBO 3,6
1	964 341 655 19	wheel carrier	/L /L	1 1	CARRERA 2/4 TURBO-LOOK CARRERA 4
1	965 341 655 19	wheel carrier	/L /L /L	1 1 1	TURBO TURBO-LOOK CARRERA 2 CARRERA RS
1	965 341 655 21	wheel carrier	/L	1	TURBO 3,6
(1)	964 341 656 19	wheel carrier	/R /R	1 1	CARRERA 2/4 TURBO-LOOK CARRERA 4
(1)	965 341 656 19	wheel carrier	/R /R /R	1 1 1	TURBO TURBO-LOOK CARRERA 2 CARRERA RS
(1)	965 341 656 21	wheel carrier	/R	1	TURBO 3,6
2	A 999 053 041 00	angular-contact bearing		2	
2	999 053 041 01	angular-contact bearing		2	
3	N 012 298 1	circlip		2	
4	964 341 253 00	spacer ring		2	CARRERA RS
5	900 067 310 09	pan-head screw M 12 X 1,25 X 90		4	
(5)	999 072 006 09	hexagon-head bolt M 14 X 1,5 X 55		2	TURBO 3,6
6	999 025 212 09	washer 12,5 X 24 X 3		4	
7	999 084 623 09	lock nut M 12 X 1,25		4	
7	999 084 440 09	hexagon nut M 14 X 1,5		2	TURBO 3,6
8	964 341 065 01	front wheel hub	89	2	CARRERA 4
8	964 341 065 02	front wheel hub	90-	2	CARRERA 4

Pos	Part Number	Name	Remarks	Qty	Model
8	964 341 065 04	front wheel hub	92-	2 2	CARRERA 4 TURBO-LOOK CARRERA 4
8	964 341 065 12	front wheel hub		2	CARRERA 2
8	964 341 065 12	front wheel hub		2 2 2	CARRERA 2 TURBO/LOOK CARRERA 2 TURBO 3,6
8	964 341 066 04	front wheel hub		2	CARRERA RS
9	904 341 671 00	wheel bolt		10 10 10	CARRERA 2/4 TURBO/LOOK TURBO 3,6
9	928 341 671 02	wheel bolt		10	CARRERA RS
10	964 341 607 00	sealing ring		2	
11	900 067 008 02	pan-head screw		2	
12	964 606 404 01	speed sensor	-92	2	
12	964 606 404 02	speed sensor	/R 93-	1	
(12)	964 606 403 02	speed sensor	/L 93-	1	
13	900 174 032 40	round seal		2	
14	A 964 341 155 13	shake-proof washer		2	CARRERA 2
14	964 341 155 13	shake-proof washer		2 2 2	TURBO/LOOK CARRERA 2 TURBO 3,6 CARRERA 2
15	900 082 123 09	hexagon-head bolt M 22 X 1,5 X 100		2 2 2	CARRERA 2 TURBO/LOOK CARRERA 2 TURBO 3,6
16	999 090 008 02	lock nut		2 2 2	CARRERA 2 TURBO/LOOK CARRERA 2 TURBO 3,6
17	964 341 252 02	cover	-92	2	CARRERA 2
17	964 341 252 02	cover	93-	2 2 2	CARRERA 2 TURBO/LOOK CARRERA 2 TURBO 3,6
18	964 341 661 01	cover		2	
19	999 217 088 02	hexagon-head bolt M 8 X 20		8	
20	964 341 131 00	tension bolt		2	CARRERA RS
21	964 343 529 70	transverse strut		1	

- -- E N D -- -

Model	Year	MG	SG	Illustration	Restrictions	Update				
964	94	4	01	401-10		194	17:48	24.11.2005	PORSCHE	PET	PORSCHE

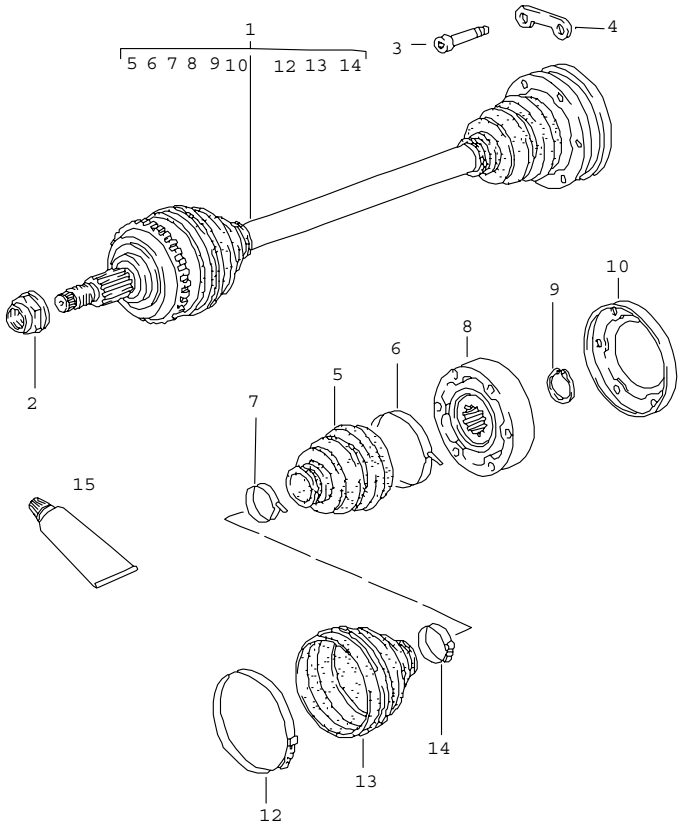

Pos	Part Number	Name	Remarks	Qty	Model
		drive shaft			CARRERA 4 TURBO-LOOK CARRERA 4
1	964 349 038 22	drive shaft		2	CARRERA 4
1	965 349 038 22	drive shaft		2	TURBO-LOOK CARRERA 4
2	999 090 008 02	lock nut M 22 X 1,5		2	
3	900 067 211 09	pan-head screw M 8 X 50		12	
4	993 349 191 00	plate		6	
5	928 332 293 02	dust bellows		2	
6	911 332 257 00	clip		2	
7	928 332 257 01	clip		2	
8	964 349 938 00	joint		2	
9	900 041 013 01	circlip		2	
10	964 332 259 00	cover		2	
12	803 407 291	clip		2	
13	964 349 291 00	dust bellows		2	
14	928 332 257 01	clip		2	
15	000 043 110 01	grease 1 tube 100 g		X	
		- -- E N D -- -			

Model	Year	MG	SG	Illustration	Restrictions	Update	17:48	24.11.2005	PORSCHE PET PORSCHE
964	94	4	02	402-00		194			

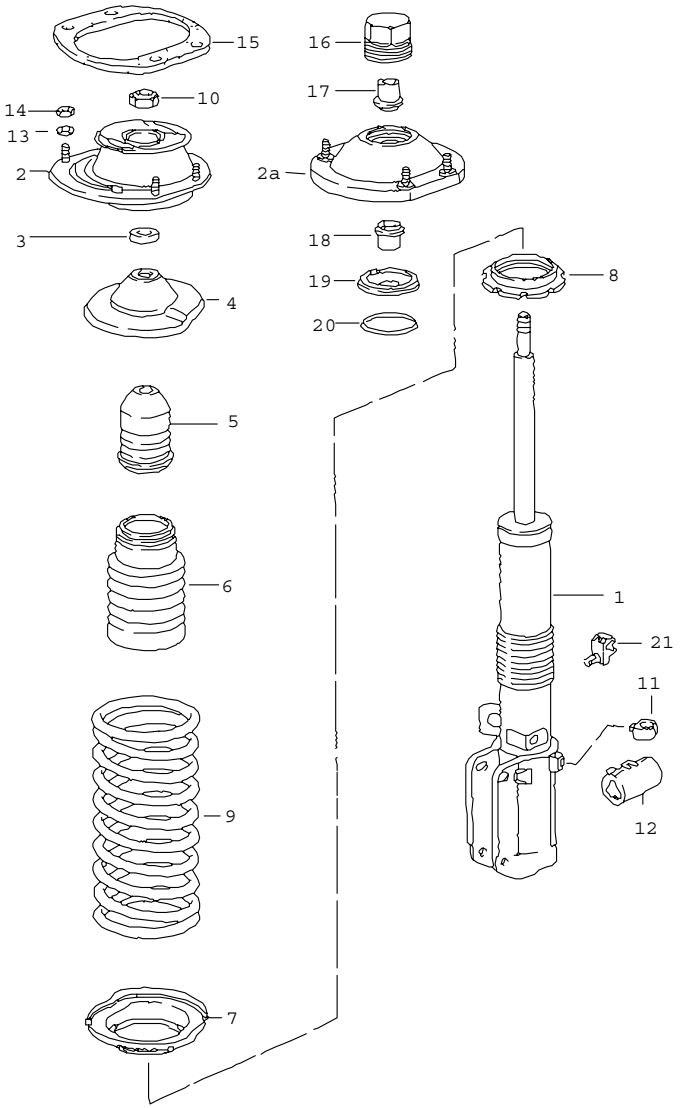

Pos	Part Number	Name	Remarks	Qty	Model
		springs shock absorber strut			
1	964 343 041 02	shock absorber strut - boge -	/L /L	1 1	CARRERA 4 TURBO-LOOK CARRERA 4
1	964 343 042 02	shock absorber strut - boge -	/R /R	1 1	CARRERA 4 TURBO-LOOK CARRERA 4
1	964 343 041 03	shock absorber strut - boge -	/L /L	1 1	CARRERA 2 TURBO-LOOK CARRERA 2
1	964 343 042 03	shock absorber strut - boge -	/R /R	1 1	CARRERA 2 TURBO-LOOK CARRERA 2
1	964 343 041 04	shock absorber strut - boge - F 96MS4 01468>> F 96MS4 30300>> F 96MS4 50778>>	/L 91- /L	1 1	CARRERA 4 COUPE M 030 COUPE TARGA CABRIO
1	964 343 042 04	shock absorber strut - boge - F 96MS4 01468>> F 96MS4 30300>> F 96MS4 50778>>	/R 91-	1 1	CARRERA 4 COUPE M 030 COUPE TARGA CABRIO
1	965 343 041 00	shock absorber strut - boge - F 96MS4 01468>> F 96MS4 30300>> F 96MS4 50778>>	/L 91- /L	1 1	TURBO CARRERA 2 COUPE M 030 COUPE TARGA CABRIO
1	965 343 041 02	shock absorber strut - boge -	/L	1	TURBO 3,6
1	965 343 042 00	shock absorber strut - boge - F 96MS4 01468>> F 96MS4 30300>> F 96MS4 50778>>	/R 91- /R	1 1	TURBO CARRERA 2 COUPE M 030 COUPE TARGA CABRIO
1	965 343 042 02	shock absorber strut - boge -	/R	1	TURBO 3,6
1	964 343 041 80	shock absorber strut - bilstein -	/L	1	CARRERA RS
1	964 343 042 80	shock absorber strut - bilstein -	/R	1	CARRERA RS
2	964 343 018 02	supporting mount	89	2	CARRERA 4

Pos	Part Number	Name	Remarks	Qty	Model
2	964 343 018 02	supporting mount	90-	2	CARRERA 2/4
2	965 343 018 02	supporting mount		2 2	TURBO/LOOK TURBO 3,6
2A	964 343 018 82	supporting mount		2	CARRERA RS
3	964 343 514 00	spacer sleeve		2	
4	964 343 507 00	concave washer		2	
5	964 343 301 00	rubber stop		2	
5	964 343 301 80	rubber stop		2	CARRERA RS
6	964 343 505 00	boot		2	
7	964 343 503 00	concave washer		2	
8	964 343 502 00	adjusting nut		2	
9	964 343 531 05	coil spring 1 set	-91	1 1	CARRERA 2 TURBO
	504	marked blue			
9	964 343 531 11	coil spring 1 set	92-	1 1	CARRERA 2 TURBO/LOOK
	504	marked green			
9	965 343 531 01	coil spring 1 set		1	TURBO 3,6
	504	marked orange green			
9	964 343 531 06	coil spring 1 set	-91	1	CARRERA 4
	504	marked orange			
9	964 343 531 12	coil spring 1 set	92-	1	CARRERA 4
	504	marked orange			
9	964 343 531 80	coil spring 1 set		1	CARRERA RS
	504	marked yellow			
9	964 343 531 09	coil spring 1 set		1	SPEEDSTER
	504	marked green white			
10	N 022 150 2	lock nut M 14X1,5		2	
11	928 612 409 00	clip		2	
12	928 612 531 00	push-on connector	/L	1	
12	928 612 531 01	push-on connector	/R	1	
13	900 025 007 02	washer		8	
14	900 076 025 02	hexagon nut		8	
(14)	999 085 001 02	socket head nut		1	CARRERA RS
15	964 341 511 80	gasket	-91	2	
15	964 341 511 80	gasket	92-	2	
16	964 333 469 80	screw plug		2	CARRERA RS
17	964 343 182 81	spacer sleeve		2	CARRERA RS
18	964 343 182 82	spacer sleeve		2	CARRERA RS
19	964 343 186 80	sealing cap		2	CARRERA RS
20	964 343 188 80	retainer spring		2	CARRERA RS
21	999 591 931 40	clip		2	

- -- E N D -- -

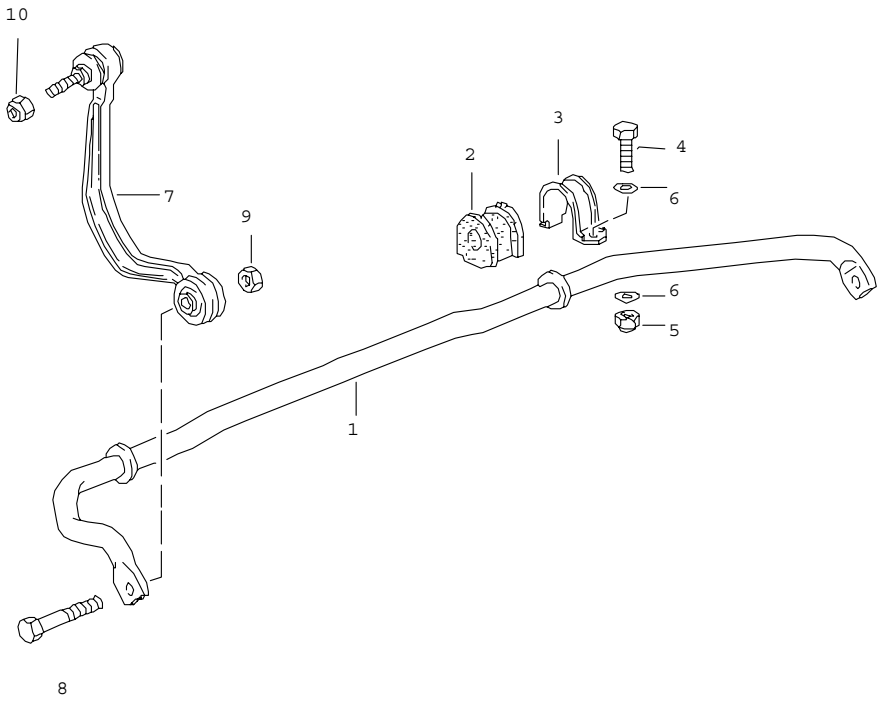

Pos	Part Number	Name	Remarks	Qty	Model
		stabiliser			
1	964 343 707 33	stabiliser 20 MM	89	1	CARRERA 4
1	964 343 707 33	stabiliser 20 MM	90-	1	CARRERA 2/4
1	964 343 707 35	stabiliser 22 MM	91-	1	CARRERA 2/4 M 030
1	965 343 707 29	stabiliser 21 MM		1 1	TURBO/LOOK TURBO 3,6
(1)	964 343 707 70	stabiliser 24 MM		1	CARRERA RS
2	964 343 792 12	stabiliser mounting 20 MM	89	2	
2	964 343 792 20	stabiliser mounting 20 MM	90-	2	
2	964 343 792 22	stabiliser mounting 22 MM	91-	2	CARRERA 2/4 M 030
2	964 343 792 21	stabiliser mounting 21 MM		2 2	TURBO/LOOK TURBO 3,6
2	964 343 792 07	stabiliser mounting 24 MM		2	CARRERA RS
3	964 343 777 00	clip		2 2	CARRERA 2/4 TURBO/LOOK TURBO 3,6
3	964 343 777 80	clip		2 2	M 030 CARRERA RS
4	900 075 029 09	hexagon-head bolt M 8 X 25		4	
5	900 910 022 09	lock nut M 8		4	
6	999 025 125 09	washer A 8,4		4	
7	964 343 069 01	stabiliser mounting	/L /L	1 1	CARRERA 4 CARRERA 2 M 030
(7)	964 343 070 01	stabiliser mounting	/R /R	1 1	CARRERA 4 CARRERA 2 M 030

Pos	Part Number	Name	Remarks	Qty	Model
(7)	964 343 071 00	stabiliser mounting	/L	1	CARRERA 2
			/L	1	TURBO/LOOK
			/L	1	TURBO 3,6
(7)	964 343 072 00	stabiliser mounting	/R	1	CARRERA 2
			/R	1	TURBO/LOOK
			/R	1	TURBO 3,6
(7)	964 343 071 80	stabiliser mounting	/L	1	CARRERA RS
(7)	964 343 072 80	stabiliser mounting	/R	1	CARRERA RS
8	900 074 063 02	hexagon-head bolt M 10 X 55		2	CARRERA 4
9	900 910 031 09	lock nut M 10		2	
9	999 084 624 09	lock nut M 10		2	CARRERA RS
10	900 910 031 09	lock nut M 10 X 1		2	
		- -- E N D -- -			

Pos	Part Number	Name	Remarks	Qty	Model

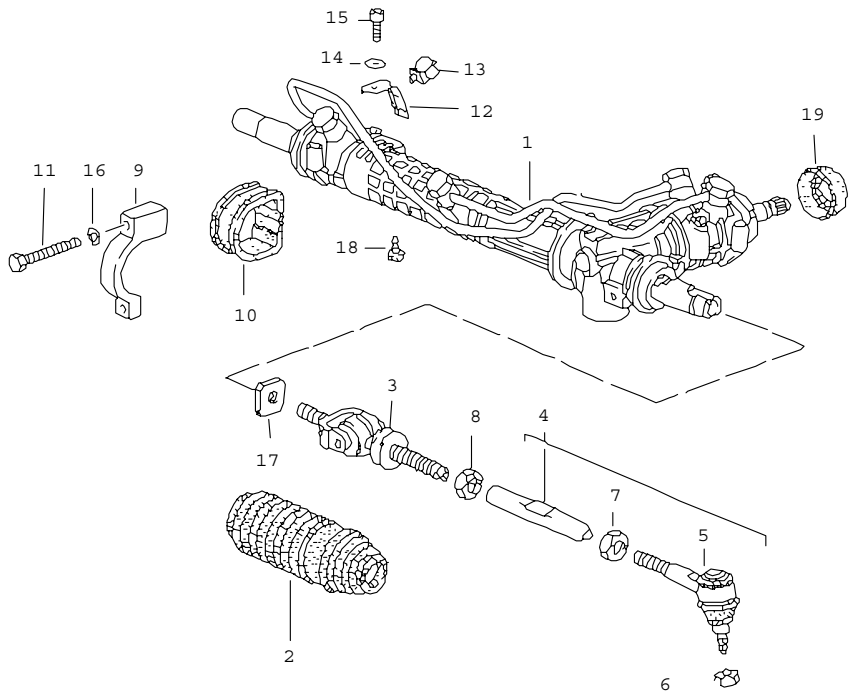

Pos	Part Number	Name	Remarks	Qty	Model
		steering gear steering parts			
1	> 964 347 009 04	steering gear power steering see technical information GR.4 7/93 use also: POS.9,10,11,16	/LL -91	1	
1	> 964 347 009 04	steering gear power steering use also: POS.9,10,11,16	/LL	1	
1	> 964 347 012 05	steering gear power steering use also: POS.9,10,11,16	/RL -91	1	
1	> 964 347 012 05	steering gear power steering use also: POS.9,10,11,16	/RL 92-	1	
1	964 347 011 02	steering gear manual use also: POS.9,10,11,16	/LL	1	CARRERA RS
2	964 347 191 03	bellows		2	
3	964 347 058 00	joint fork		2 2	CARRERA 4 CARRERA RS
3	964 347 058 01	joint fork		2 2	CARRERA 2 TURBO/LOOK TURBO 3,6
4	964 347 032 00	tie rod		2 2	CARRERA 2/4 CARRERA RS
4	965 347 032 00	tie rod		2 2	TURBO TURBO 3,6
4	965 347 032 00	tie rod		2	CARRERA 2 TURBO-LOOK
4	964 347 032 01	tie rod		2	CARRERA 4 TURBO-LOOK
5	964 347 322 02	ball joint		2	
6	900 910 046 02	lock nut M 12 X 1,5		2	
7	900 034 024 07	hexagon nut M 14 X 1,5		2	

Pos	Part Number	Name	Remarks	Qty	Model
8	900 034 031 07	hexagon nut M 14 X 1,5 LH		2	
9	A 964 347 223 08	clip		2	
9	964 347 223 08	clamp		2	
10	A 964 347 137 03	rubber insert	-91	2	
10	964 347 137 07	rubber insert	-92	2	
10	964 347 137 07	rubber insert	93-	2	
11	999 218 102 09	pan-head screw M 8 X 60 micro-self-locking		4	
12	964 347 473 00	support		1	
13	944 347 467 00	cable clip		2	
14	N 011 524 7	washer		1	
15	900 067 009 02	pan-head screw		1	
16	900 031 001 02	washer		4	
17	964 347 325 02	steer angle limitation		2	
17	964 347 325 00	steer angle limitation		2	TURBO/LOOK
18	477 419 115	plug		1	
19	964 347 333 02	rubber seal		1	
		- -- E N D -- -			

Pos	Part Number	Name	Remarks	Qty	Model

Model	Year	MG	SG	Illustration	Restrictions	Update	17:48	24.11.2005	PORSCHE PET PORSCHE
964	94	4	03	403-02		194			

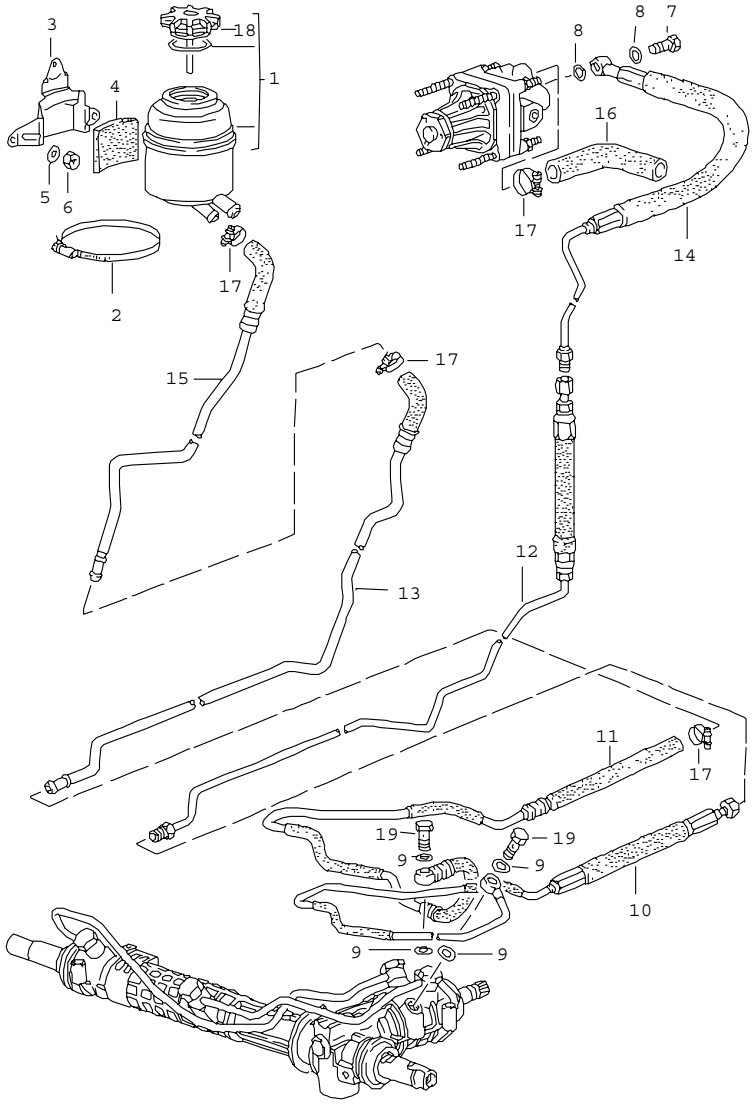

Pos	Part Number	Name	Remarks	Qty	Model
		power steering lines			
1	A 964 347 015 01	oil tank	-91	1	
(1)	A 993 347 015 00	oil tank	92-	1	
(1)	993 347 015 01	oil tank	93-	1	
2	999 512 350 02	hose clamp		1	
3	964 347 123 01	support		1	
4	999 702 179 40	grommet		1	
5	N 011 524 7	washer		2	
6	900 910 010 09	lock nut M 6		2	
7	900 134 007 02	banjo bolt		3	
8	900 123 042 20	sealing ring D 14X18		2	
9	900 123 026 20	sealing ring D 12X16		4	
10	964 347 448 00	pressure line	/LL	1	
10	964 347 458 02	pressure line	/RL	1	
10	964 347 448 00	pressure line	/LL 92	1	TURBO 3,6
10	965 347 448 00	pressure line	/LL 93-	1	TURBO 3,6
11	964 347 449 01	return line	/LL	1	
11	964 347 455 02	return line	/RL	1	
12	964 347 446 02	pressure line	/LL	1	
12	964 347 460 01	pressure line	/RL	1	
13	964 347 450 02	return line	/LL	1	
13	964 347 454 01	return line	/RL	1	
14	964 347 447 04	pressure line		1	
15	964 347 451 01	return line		1	
16	964 347 445 03	hose	-91	1	CARRERA
16	964 347 445 03	hose	92-	1	CARRERA
16	965 347 445 00	hose		1	TURBO TURBO 3,6

Pos	Part Number	Name	Remarks	Qty	Model	Pos	Part Number	Name	Remarks	Qty	Model
17	999 512 346 00	hose clamp		4							
18	928 347 925 00	cover		1							
19	900 175 020 02	banjo bolt M 12X24		2							
		- -- E N D -- -									

Model	Year	MG	SG	Illustration	Restrictions	Update				
964	94	4	03	403-05		194	17:49	24.11.2005	PORSCHE	PET	PORSCHE

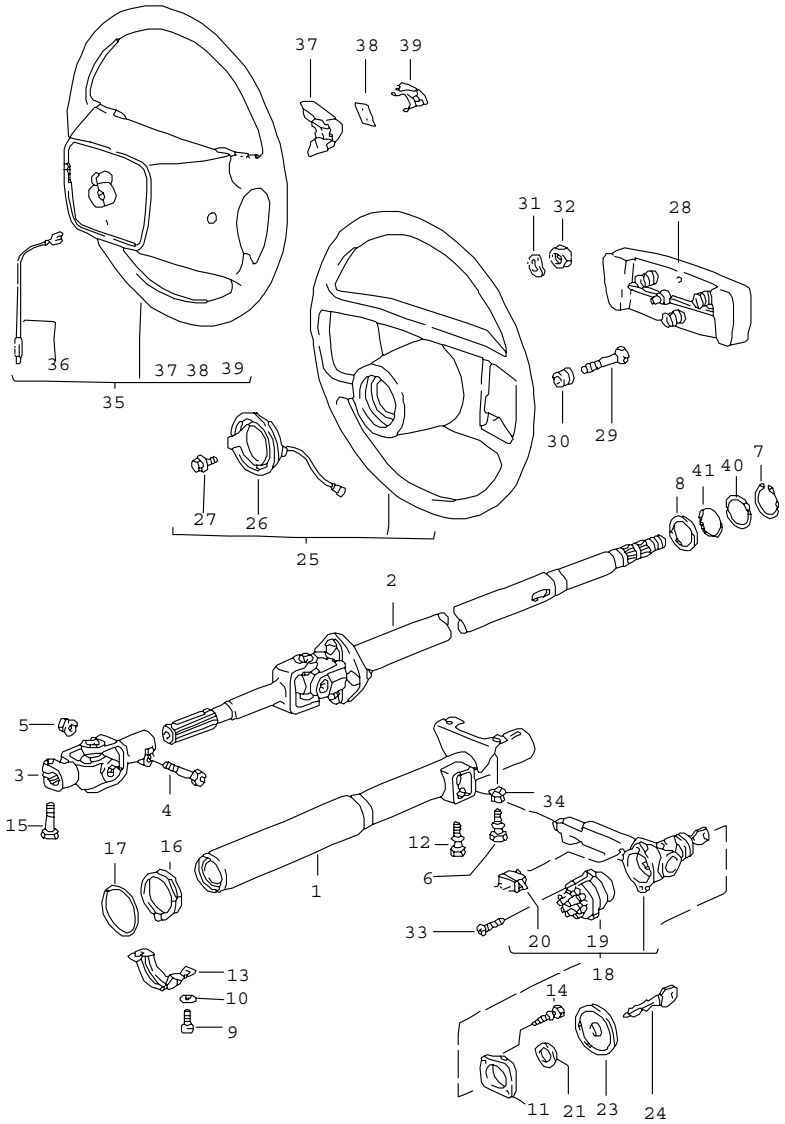

Pos	Part Number	Name	Remarks	Qty	Model
		steering outer tube steering shaft steering wheels			
1	964 347 013 02	steering outer tube	/LL	1	
(1)	964 347 014 02	steering outer tube	/RL	1	
1	964 347 013 53	steering outer tube airbag	/LL 90-	1	
(1)	964 347 014 50	steering outer tube airbag	/RL 93-	1	
2	964 347 051 00	steering shaft	/LL	1	
2	964 347 052 00	steering shaft	/RL	1	
2	964 347 059 50	steering shaft airbag	/LL 90-	1	
2	964 347 060 50	steering shaft airbag	/RL 93-	1	
3	964 347 025 10	universal joint		1	
3	964 347 206 51	universal joint airbag	/LL 90-	1	
4	999 311 003 02	fit bolt		1	
5	999 084 435 02	hexagon nut		1	
6	901 347 753 00	shear bolt		2	
7	900 041 012 01	circlip		1	
8	999 234 023 01	shim		1	
9	900 067 008 02	pan-head screw		2	
9	999 218 044 02	pan-head screw airbag	90-	2	
10	900 031 011 02	washer		2	
11	911 347 359 01	reinforcement plate		1	
12	999 219 024 02	shear bolt M 8 X 13,5	/LL	1	
(12)	999 219 030 02	shear bolt M 8 X 10,5	/RL	1	
13	964 347 476 01	support		1	
14	999 219 017 02	shear bolt M 6 X 25		2	

Pos	Part Number	Name	Remarks	Qty	Model
15	999 311 004 02	fit bolt		1	
16	964 347 701 01	sealing ring		1	
17	999 707 008 40	o-ring		1	
18	964 347 917 01	steering lock w/o stipulated lock number	-91	1	
18	964 347 917 01	steering lock w/o stipulated lock number	92-	1	
18	964 347 917 00	steering lock state lock number	-91	1 1	
18	964 347 917 00	steering lock with stipulated lock-no. state lock number	92-	1	
19	964 613 012 00	ignition starter switch		1	
20	911 613 125 00	buzzer contact		1	
21	911 613 169 00	washer		1	
23	911 613 160 01	rose		1	
	70B	black for ignition starter lock			
24	911 538 902 00	replacement key state lock number		1	
25	964 347 084 00	steering wheel $ 380 MM		1	
	1AJ	black			
	7LD	burgundy			
	3LZ	mahogany			
	2JZ	marine blue			
	2UT	caramel			
	6KT	venetian blue			
	8WH	slate grey			
	M47	matador red	91-		
	D17	carrara grey	91-		
	J27	sherwood green	91-		
	7WH	classic grey	91-		
	9WW	cobalt blue	91-		
	4XW	magenta	91-		
25	964 347 084 02	steering wheel $ 380 MM with elevated hub		1	M 018
	1AJ	black			
	7LD	burgundy			
	3LZ	mahogany			
	2JZ	marine blue			
	2UT	caramel			
	6KT	venetian blue			
	8WH	slate grey			
	M47	matador red	91-		
	D17	carrara grey	91-		
	J27	sherwood green	91-		
	7WH	classic grey	91-		
	9WW	cobalt blue	91-		
	4XW	magenta	91-		
25	928 347 084 08	steering wheel with elevated hub		1	CARRERA RS M 018
	1AJ	black			
25	928 347 084 07	steering wheel		1	CARRERA RS
	1AJ	black			
(25)	968 347 084 00	steering wheel		1	SPEEDSTER
	8YR	black			
26	928 347 099 00	slip ring		1	
27	113 415 869	oval-head screw AM 3,5 X 10		7	
28	911 347 859 07	pad for horn		1	
	1AJ	black			
	7LD	burgundy			

Pos	Part Number	Name	Remarks	Qty	Model
	3LZ	mahogany			
	2JZ	marine blue			
	2XA	caramel			
	6KT	venetian blue			
	8WH	slate grey			
	M47	matador red	91-		
	D17	carrara grey	91-		
	J27	sherwood green	91-		
	7WH	classic grey	91-		
	9WW	cobalt blue	91-		
	4XW	magenta	91-		
28	964 347 859 80	pad for horn		1	CARRERA RS
	1AJ	black			
(28)	968 347 059 00	pad for horn		1	SPEEDSTER
	8YR				
29	N 010 261 3	hexagon-head bolt M 4 X 16		X	
30	321 419 779 A	insulating bush		3	
31	N 012 238 1	spring washer B 18		1	
32	900 078 006 01	hexagon nut M 18 X 1,5		1	
33	N 014 122 8	oval-head screw		2	
34	964 347 811 01	threaded bush for steering outer tube		2	
35	964 347 804 52	steering wheel airbag	90-	1	
	1AJ	black			
	8YR	black			
	3LZ	mahogany			
	2JZ	marine blue			

Pos	Part Number	Name	Remarks	Qty	Model
	7LD	burgundy			
	7WH	classic grey			
	9WW	cobalt blue	91-		
	4XW	magenta	91-		
	E38	rubicon grey			M 096
36	944 612 355 00	wiper contact		1	
37	944 347 831 00	switch housing	/L	1	
	01C	satin black			
	4XC	classic grey			
	6ZF	cobalt blue			
	6WX	magenta			
	9JJ	marine blue			
(37)	944 347 832 00	switch housing	/R	1	
	01C	satin black			
	4XC	classic grey			
	6ZF	cobalt blue			
	6WX	magenta			
	9JJ	marine blue			
38	944 347 884 00	contact spring		1	
39	944 347 835 00	horn button	/L	1	
	01C	black			
	9MM	burgundy			
	9JJ	marine blue			
	4XC	classic grey			
	6ZF	cobalt blue			
	6WX	magenta			
(39)	944 347 836 00	horn button	/R	1	
	01C	black			
	9MM	burgundy			

Pos	Part Number	Name	Remarks	Qty	Model	Pos	Part Number	Name	Remarks	Qty	Model
	9JJ	marine blue									
	4XC	classic grey									
	6ZF	cobalt blue									
	6WX	magenta									
40	999 234 022 01	shim		1							
41	999 707 138 40	o-ring		1							
		- -- E N D -- -									

Model	Year	MG	SG	Illustration	Restrictions	Update			
964	94	4	03	403-06		194	17:49	24.11.2005	PORSCHE PET PORSCHE

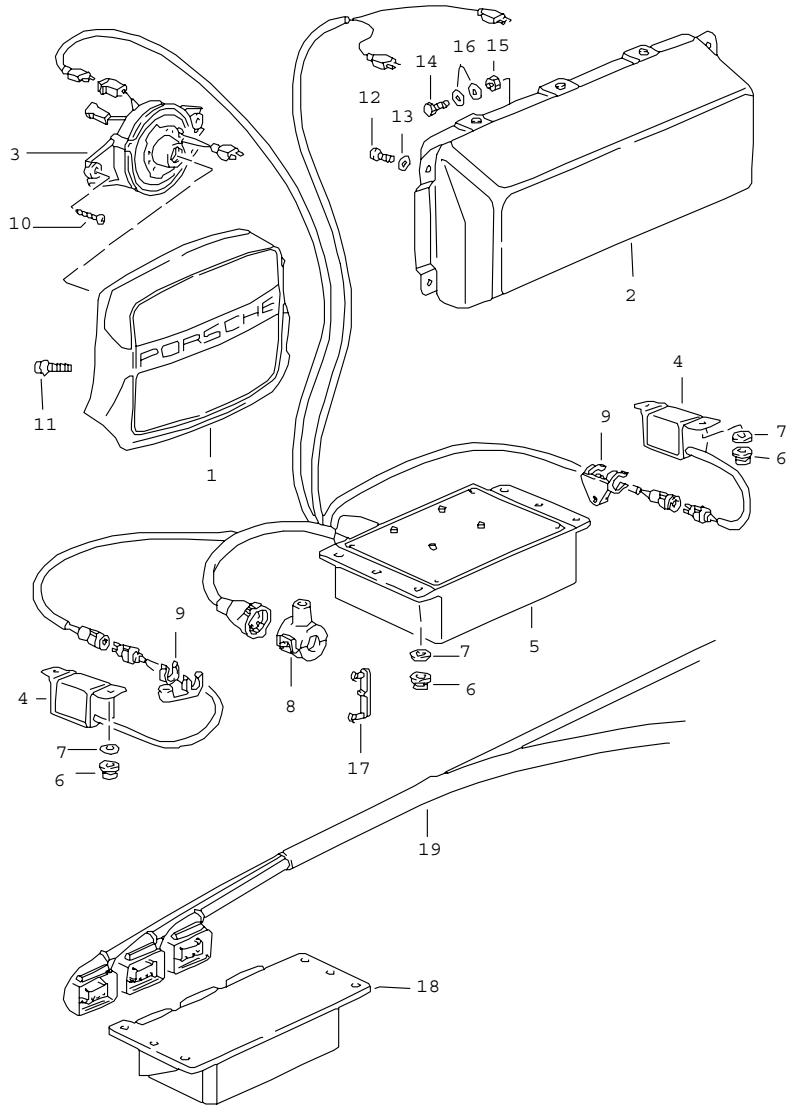

Pos	Part Number	Name	Remarks	Qty	Model
		airbag			
1	964 347 089 00	airbag unit	-91	1	
	1AJ	black			
	3LZ	mahogany			
	2JZ	marine blue			
	7LD	burgundy			
	7WH	classic grey			
	9WW	cobalt blue			
	4XW	magenta			
1	964 347 089 02	airbag unit	92	1	
	1AJ	black			
	7WH	classic grey			
	9WW	cobalt blue			
	8JD	marine blue			
	4XW	magenta			
1	964 347 089 03	airbag unit	93-	1	
	8YR	black			
	7WH	classic grey			
	9WW	cobalt blue			
	2JZ	marine blue			
	4XW	magenta			
1	964 347 089 04	airbag unit		1	M 096
	E38	rubicon grey			
2	964 803 071 01	airbag unit	/LL -92	1	
2	964 803 071 01	airbag unit	/LL 93-	1	
3	928 652 211 00	support for contact		1	
4	964 613 221 02	sensor	-91	2	
4	964 613 221 02	sensor	92-	2	
5	964 618 217 03	switch unit	/LL -91	1	

Pos	Part Number	Name	Remarks	Qty	Model
6	944 618 401 00	nut		8	
7	N 011 524 7	washer		4	
8	944 612 450 00	support		2	
9	321 971 898 B	support		2	
10	N 013 968 7	tapping screw		2	
11	999 073 030 02	pan-head screw		2	
12	900 067 051 02	pan-head screw		4	
13	900 025 003 02	washer		4	
14	999 072 005 09	hexagon-head bolt		11	
15	900 076 010 07	hexagon nut		1	
16	N 011 666 7	washer		3	
17	964 612 901 00	securing clip		1	
18	A 944 618 217 02	control unit	/LL 92-	1	
18	944 618 217 02	switch unit	/LL 92-	1	
18	945 618 217 00	switch unit	/RL 93-	1	
19	964 612 083 04	wiring harness	/LL 92-	1	
		- -- E N D -- -			

Pos	Part Number	Name	Remarks	Qty	Model

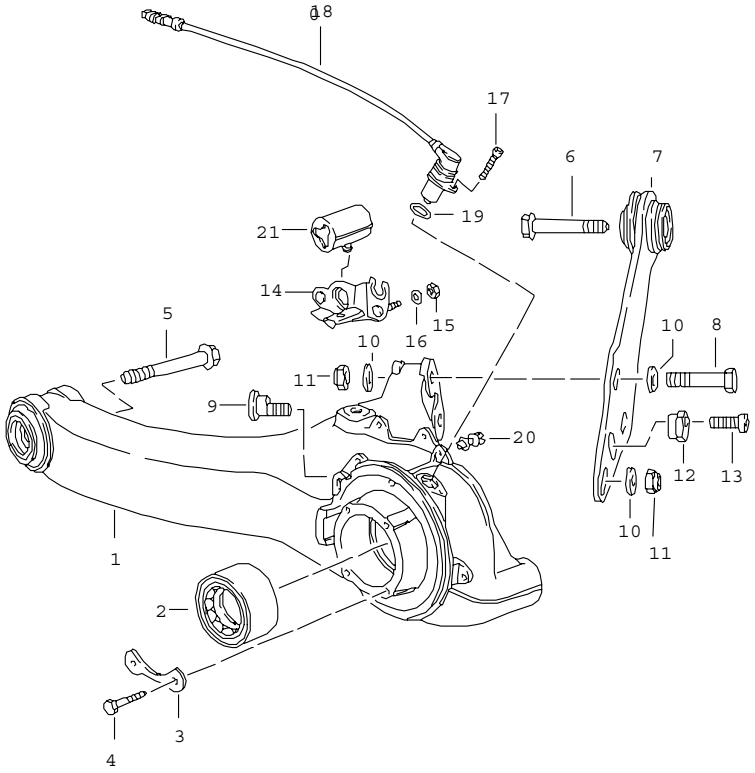

Pos	Part Number	Name	Remarks	Qty	Model
		rear axle			
1	964 331 021 00	rear-axle trailing arm	/L	1	CARRERA 2/4
(1)	964 331 022 00	rear-axle trailing arm	/R	1	CARRERA 2/4
1	965 331 021 03	rear-axle trailing arm	/L -92 /L	1 1	TURBO TURBO-LOOK
1	A 965 331 021 02	rear-axle trailing arm	/L 93-	1	TURBO 3,6
(1)	965 331 021 04	rear-axle trailing arm	/L 93-	1	TURBO 3,6
(1)	965 331 022 03	rear-axle trailing arm	/R -92 /R	1 1	TURBO TURBO-LOOK
(1)	A 965 331 022 02	rear-axle trailing arm	/R 93-	1	TURBO 3,6
(1)	965 331 022 04	rear-axle trailing arm	/R 93-	1	TURBO 3,6
1	964 331 021 70	rear-axle trailing arm	/L	1	CARRERA RS
(1)	964 331 022 70	rear-axle trailing arm	/R	1	CARRERA RS
2	999 053 050 01	angular-contact bearing		2	TURBO
2	999 053 050 01	angular-contact bearing		2	M 491
2	A 999 053 042 01	angular-contact bearing		2	CARRERA 2/4
2	999 053 042 06	angular-contact bearing		2	CARRERA 2/4 CARRERA RS
3	964 331 199 02	retainer plate		4	
4	N 010 340 6	hexagon-head bolt M 8 X 40		8	
5	999 074 111 08	hexagon-head bolt M 14 X 1,5 X 120		2	
6	900 067 159 07	pan-head screw M 14 X 1,5 X 100		2	
7	964 331 060 08	strut		2	
7	964 331 059 80	strut	/L	1	CARRERA RS
(7)	964 331 060 80	strut	/R	1	CARRERA RS
8	900 082 016 08	hexagon-head bolt		4	
9	964 331 136 01	eccentric screw		2	
10	999 025 174 02	washer		10	
11	900 910 094 02	lock nut VFM 14 X 1,5		6	

Pos	Part Number	Name	Remarks	Qty	Model
12	964 331 137 00	eccentric		2 1	CARRERA 2/4 TURBO/LOOK TURBO 3,6
12	964 331 137 80	eccentric		2	CARRERA RS
13	900 067 306 02	pan-head screw M 12 X 1,5 X 35		2	
14	964 331 071 00	support	/L	1	
(14)	964 331 072 00	support	/R	1	
15	900 910 010 02	lock nut		4	
16	N 011 524 7	washer A 6,4		4	
17	N 014 743 2	pan-head screw M 6 X 30		2	
18	964 606 402 02	speed sensor	-92	2 2	CARRERA 2/4 CARRERA RS
18	964 606 402 02	speed sensor	93-	2	CARRERA 2/4
18	944 606 401 02	speed sensor	-92	2 2	TURBO/LOOK TURBO 3,6
18	944 606 401 02	speed sensor	93-	2 2	TURBO/LOOK TURBO 3,6
19	900 174 032 40	round seal		2	
20	999 591 918 40	support		2	
21	928 612 531 00	push-on connector	/L	1	
21	928 612 531 01	push-on connector	/R	1	
		- -- E N D -- -			

Pos	Part Number	Name	Remarks	Qty	Model

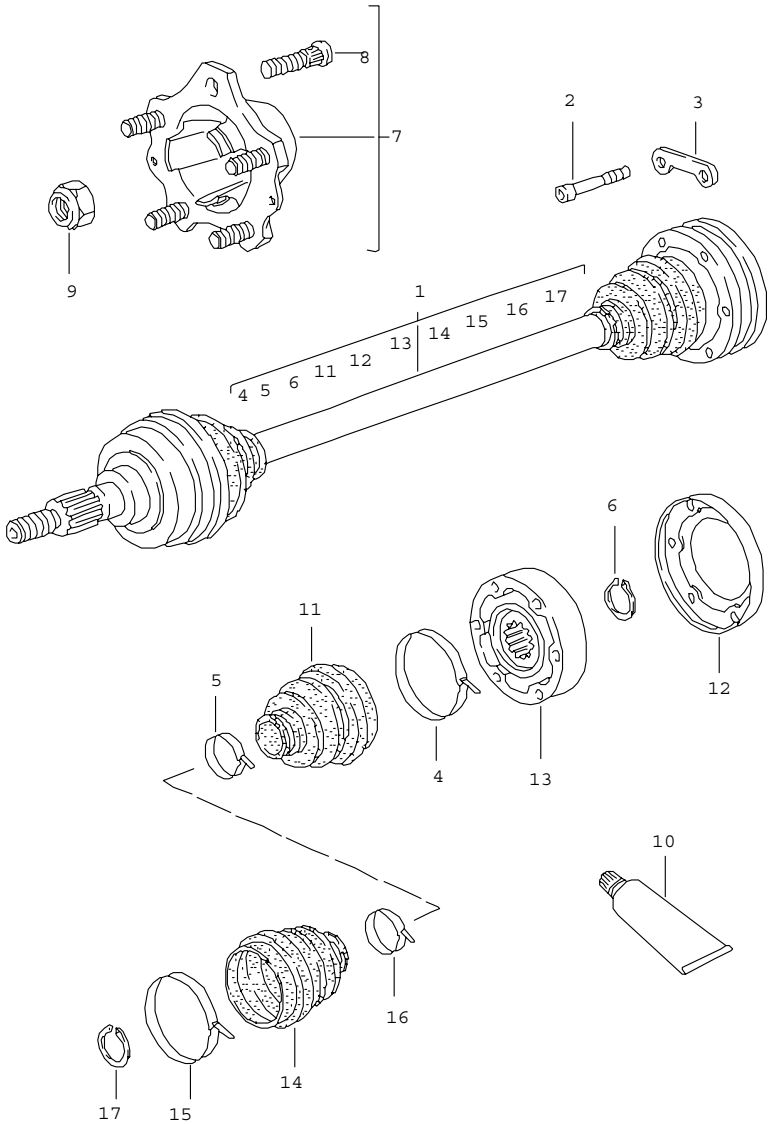

Pos	Part Number	Name	Remarks	Qty	Model
		drive shaft rear-wheel hub			
1	964 332 024 09	drive shaft		2	CARRERA 4
1	964 332 024 08	drive shaft		2	CARRERA 2
1	964 332 024 13	drive shaft		2	CARRERA 2 M 249
1	965 332 037 12	drive shaft	-92	2	TURBO,
1	965 332 037 12	drive shaft		2	TURBO-LOOK
1	965 332 037 12	drive shaft		2	TURBO 3,6
1	964 332 024 70	drive shaft		2	CARRERA RS
1	964 332 037 00	drive shaft		2	TURBO-LOOK M 249
2	900 067 211 09	pan-head screw M 8 X 50		12	CARRERA 4
2	900 067 123 01	pan-head screw M 10 X 50		12 12 12 12	CARRERA 2, TURBO/LOOK TURBO 3,6 CARRERA RS
3	993 349 191 00	plate		6	CARRERA 4
3	911 332 191 00	plate		6 6 6 6	CARRERA 2, TURBO/LOOK TURBO 3,6 CARRERA RS
4	911 332 257 00	clip $ 73 MM		4	
5	928 332 257 01	clip $ 34 MM		4	
6	900 041 013 01	circlip		4	
7	964 331 065 06	rear-wheel hub	-91	2	CARRERA 2/4
7	964 331 065 06	rear-wheel hub	92-	2 2	CARRERA 2/4 CARRERA RS
7	928 331 065 07	wheel hub	91	2	TURBO
7	928 331 065 07	rear-wheel hub	92-	2 2	TURBO/LOOK TURBO 3,6
8	904 341 671 00	wheel bolt		10 10	CARRERA 2/4 CARRERA RS

Pos	Part Number	Name	Remarks	Qty	Model
8	928 341 671 02	wheel bolt		10 10	TURBO/LOOK TURBO 3,6
9	999 084 634 09	lock nut M 22 X 1,5		2	
9	999 090 010 09	lock nut M 22 X 1,5		2	CARRERA RS
9	999 076 046 09	hexagon nut M 22 X 1,5		2	CARRERA RS
10	000 043 110 01	grease 1 tube 100 g		X	
11	928 332 293 02	dust bellows		2	
12	964 332 267 00	cover		1	CARRERA 4
12	928 332 267 01	cover		1 1 1	CARRERA 2 CARRERA 2 M 249 CARRERA RS
13	951 332 030 00	joint		2	CARRERA 4
13	911 332 030 01	joint	 -92	2 2 2	CARRERA 2 M 249 TURBO, CARRERA RS
13	928 332 030 08	joint	93-	2	TURBO
14	928 332 293 02	dust bellows		2	
15	911 332 257 00	clip		2	
16	928 332 257 01	clip		2	
17	900 041 013 01	circlip		2	
		- -- E N D -- -			

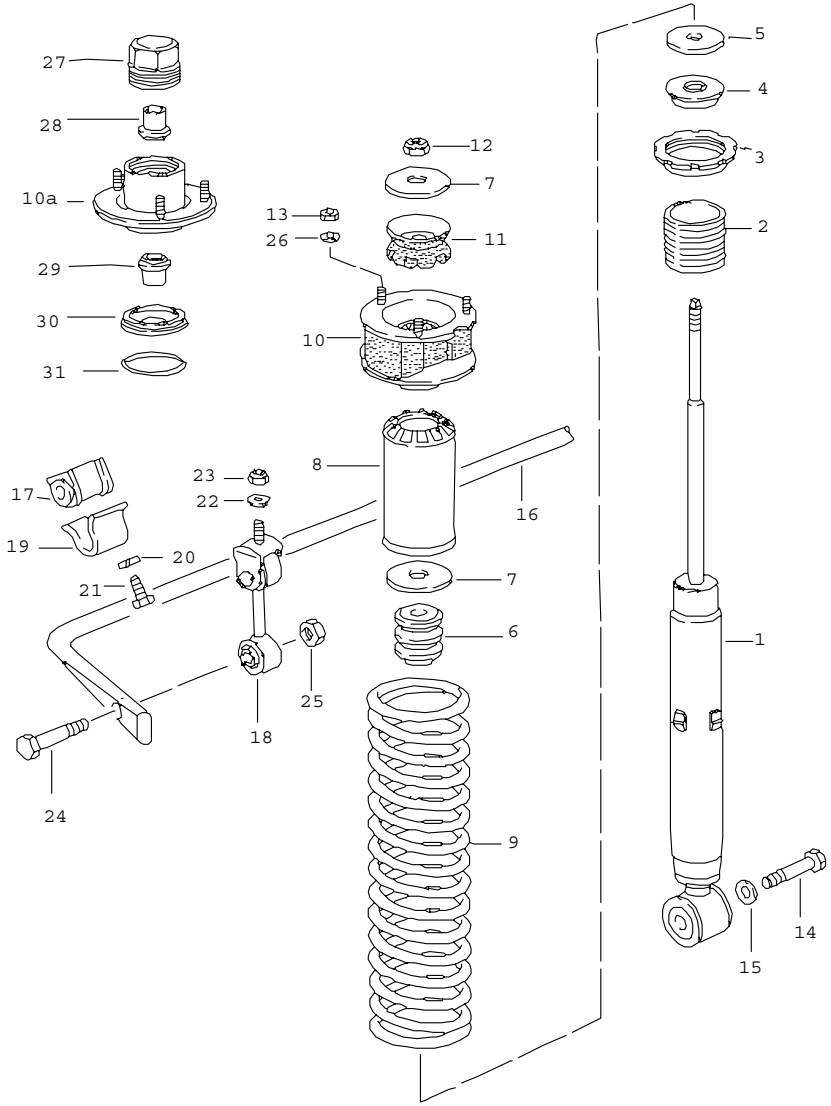

Pos	Part Number	Name	Remarks	Qty	Model
		shock absorber stabiliser			
1	964 333 051 05	vibration damper - boge - F >>96MS4 01467 F >>96MS4 10518 F >>96MS4 30299 F >>96MS4 40240 F >>96MS4 50777 F >>96MS4 60466		2	CARRERA 2/4 COUPE COUPE TARGA TARGA CABRIO CABRIO
1	964 333 057 00	vibration damper - boge - F 96MS4 01468>> F 96MS4 10519>> F 96MS4 30300>> F 96MS4 40241>> F 96MS4 50778>> F 96MS4 60467>>		2	CARRERA 2/4 TURBO-LOOK COUPE COUPE TARGA TARGA CABRIO CABRIO
1	965 333 057 00	vibration damper - boge -		2	TURBO
1	965 333 057 01	vibration damper - boge -		2	TURBO 3,6
1	965 333 057 00	vibration damper - boge -		2	CARRERA 2/4 COUPE M 030
1	964 333 057 80	vibration damper - bilstein -		2	CARRERA RS
2	964 333 511 00	threaded sleeve		2	
3	964 333 513 00	adjusting nut		2	
4	928 333 551 00	supporting cover	-90	2	
5	911 333 511 00	washer	-90	2	
5	964 333 107 00	washer	91-	2	
(5)	964 333 523 81	concave washer		2	CARRERA RS
6	928 333 518 10	additional spring	-90	2	
6	964 333 105 00	additional spring	91-	2	
6	964 333 105 80	additional spring		2	CARRERA RS
7	964 333 517 01	support ring	-90	2	
7	964 333 107 00	washer	91-	2	
8	964 333 502 01	protective tube	-90	2	
8	964 333 106 00	bellows	91-	2	

Pos	Part Number	Name	Remarks	Qty	Model
9	964 333 531 02	coil spring 1 set	90	1	CARRERA 2 M 481
	504	marked blue			
9	964 333 531 04	coil spring 1 set	 91-	1 1	CARRERA 4 CARRERA 2
	504	marked orange			CARRERA 4 TURBO-LOOK
9	965 333 531 03	coil spring 1 set	 91-	1 1	TURBO, CARRERA 2/4
	504	marked green			M 030
9	965 333 531 04	coil spring 1 set		1	TURBO 3,6
	504	marked orange blue			
9	964 333 531 80	coil spring 1 set		1	CARRERA RS
	504	marked yellow			
9	964 333 531 07	coil spring 1 set		1	TURBO-LOOK
	504	marked violet			
10	964 333 064 04	suspension strut mounting	-90	2	
10	964 333 059 00	suspension strut mounting	91-	2	
10A	964 333 059 82	suspension strut mounting		2	CARRERA RS
11	964 333 069 03	mounting for absorber	-90	2	
12	999 084 621 09	hexagon nut M 12 X 1,5		2	
13	999 084 622 02	lock nut M 8	-90	6	
13	900 380 006 02	lock nut M 8	91-	6	
14	900 082 102 08	hexagon-head bolt M 14 X 1,5 X 100		2	

Pos	Part Number	Name	Remarks	Qty	Model
15	999 025 149 02	washer		2	
16	964 333 701 06	stabiliser 18 MM	-90	1	CARRERA 4
16	964 333 701 06	stabiliser 20 MM	91-	1	CARRERA 2/4 M 481
16	964 333 701 07	stabiliser 21 MM	90	1	CARRERA 2 M 481
16	964 333 701 12	stabiliser 19 MM		1	CARRERA 2 M 249
16	965 333 701 04	stabiliser 22 MM		1 1 1	TURBO TURBO 3,6 TURBO-LOOK
16	965 333 701 10	stabiliser 21 MM		1	TURBO-LOOK M 249
16	964 333 701 70	stabiliser 18 MM		1	CARRERA RS
17	477 411 313 D	rubber mounting 21 MM		2	CARRERA 2 TURBO-LOOK M 249
17	477 411 313 B	stabiliser mounting 18 MM		2 2	CARRERA 4 CARRERA RS
17	477 411 313 C	stabiliser mounting 20 MM	91-	2 2	CARRERA 4 CARRERA 2 M 481
17	964 333 792 00	stabiliser mounting 19 MM		2	CARRERA 2 M 249
17	477 411 313 E	stabiliser mounting 22 MM		2 2	TURBO TURBO 3,6
18	964 333 073 01	stabiliser mounting	/L	1	
(18)	964 333 074 01	stabiliser mounting	/R	1	
19	113 411 333	retaining bow		2	
20	N 012 228 3	spring washer B 8 X 17 X 0,8		4	
21	900 075 099 02	hexagon-head bolt M 8 X 30		4	
22	900 025 008 09	washer		2	
23	900 910 031 09	lock nut		2	

Pos	Part Number	Name	Remarks	Qty	Model
24	900 082 035 02	hexagon-head bolt M 12 X 1,5 X 60		2	
25	900 910 046 02	lock nut VM 12 X 1,5		2	
26	999 025 125 09	washer 8,4 X 17 X 3,1		6	
27	964 343 469 80	screw plug		2	CARRERA RS
28	964 333 466 83	spacer sleeve		2	CARRERA RS
29	964 333 466 84	spacer sleeve		2	CARRERA RS
30	964 343 186 80	sealing cap		2	CARRERA RS
31	964 343 188 80	retainer spring		2	CARRERA RS
		- -- E N D -- -			

Model	Year	MG	SG	Illustration	Restrictions	Update		
964	94	5	98	REP		194	9:49	25.11.2005

Pos	Part Number	Name	Remarks	Qty	Model
		repair kits			
>>	> 928 332 924 02	repair kit		X	
		dust bellows		1	
		comprising:			
		cover		1	
-	999 152 084 01	circlip		1	
-	911 332 257 00	clip		1	
		$ 73 MM			
		dust bellows		1	
-	928 332 257 01	clip		1	
		$ 34 MM			
-	000 043 005 00	grease for drive shaft		1	
		optimoly			
		90 G.			
>>	> 911 332 923 01	repair kit		X	CARRERA TURBO CARRERA M 491
		comprising:			
		constant-velocity joint		1	
		cover		1	
-	999 152 084 01	circlip		1	
		dust bellows		1	
-	911 332 257 00	clip		1	
		$ 73 MM			
-	928 332 257 01	clip		1	
		$ 34 MM			
-	000 043 005 00	grease for drive shaft		1	
		optimoly			
		90 G.			
		- -- E N D -- -			

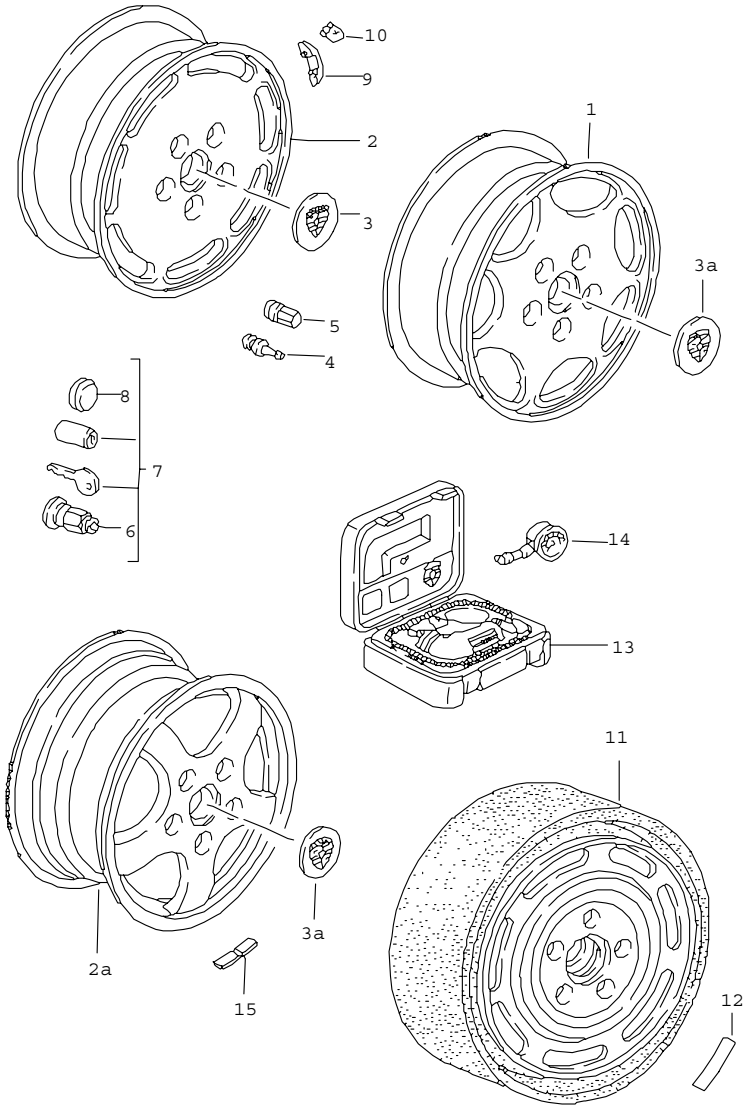

Pos	Part Number	Name	Remarks	Qty	Model
		wheels	-92		CARRERA TURBO-LOOK TURBO
1	964 362 112 01	alloy wheel silver metallic 6 J X 16 ET 52,3	/V	2	CARRERA 2/4
1	964 362 116 01	alloy wheel silver metallic 8 J X 16 ET 52,3	/H	2	CARRERA 2/4
1	964 362 114 01	alloy wheel silver metallic 7J X 16 ET 55,0 for winter use	/H	2	CARRERA 2/4
2	944 362 113 00	alloy wheel silver metallic 6 J X 16 ET 52,3	/V	2	CARRERA 2/4
2	928 362 117 00	alloy wheel silver metallic 8 J X 16 ET 52,3	/H	2	CARRERA 2/4
2	944 362 113 01	alloy wheel platinum 6 J X 16 ET 52,3	/V	2	CARRERA 2/4
2	928 362 117 01	alloy wheel platinum 8 J X 16 ET 52,3	/H	2	CARRERA 2/4
2A	965 362 124 01	alloy wheel silver metallic 7J X 17 ET 55	/V /V /V	2 2 2	TURBO TURBO-LOOK CARRERA 2/4
2A	965 362 128 00	alloy wheel silver metallic 9J X 17 ET 55	/H /H	2 2	TURBO TURBO-LOOK
2A	965 362 126 01	alloy wheel silver metallic 8J X 17 ET 52 for winter use	/H	2 2	CARRERA 2/4 M 403 TURBO/LOOK

Pos	Part Number	Name	Remarks	Qty	Model
2A	944 362 112 00	alloy wheel silver metallic 6J X 16 ET 52	/V 92-	2	CARRERA 2/4
2A	965 362 124 15	alloy wheel silver metallic 7,5J X 17 ET 55	/V	2	CARRERA RS
2A	944 362 116 00	alloy wheel silver metallic 8J X 16 ET 52	/H 92-	2	CARRERA 2/4
2A	965 362 128 10	alloy wheel silver metallic 9J X 17 ET 55 see technical information group 4 NR.1/02	/H	2	CARRERA RS
2A	965 362 128 05	alloy wheel silver metallic 9,5J X 17 ET 68 use also:	/H /H	2 2	TURBO-LOOK TURBO
--	951 331 611 02	spacer ring		2	
--	904 341 671 00	wheel bolt		10	
--	999 182 003 36	wheel nut		10	
3	928 361 031 00	hub cap silver metallic		4	
3	477 601 051 D	hub cap platinum-metallic		4	
3A	928 361 032 01	hub cap silver metallic	89	4	
3A	928 361 032 02	hub cap silver metallic	90-	4	
3A	993 361 303 00	hub cap	92-	4	M 402
	61M	silver metallic			M 403
3A	EXC 964 038 00	hub cap emblem coloured		4	CARRERA 4 M 096
4	900 265 001 50	rubber valve		4	
5	999 182 003 36	wheel nut		16	
6	928 361 306 03	wheel nut lockable without lock	-91	4	CARRERA 2/4
6	965 361 170 00	wheel nut lockable without lock	92	4	
7	928 361 047 03	wheel nut set lockable	-91	1	CARRERA 2/4
7	965 361 955 00	wheel nut set lockable	92	1	
8	965 361 167 00	cap	-91	4	CARRERA 2/4
8	965 361 167 00	cap	92-	4	
9	928 361 421 00	balance weight 5 G		X	
9	928 361 410 00	balance weight 10 G		X	
9	928 361 422 00	balance weight 15 G		X	
9	928 361 411 00	balance weight 20 G		X	
9	928 361 423 00	balance weight 25 G		X	
9	928 361 412 00	balance weight 30 G		X	
9	928 361 424 00	balance weight 35 G		X	
9	928 361 413 00	balance weight 40 G		X	
9	928 361 425 00	balance weight 45 G		X	
9	928 361 414 00	balance weight 50 G		X	
9	928 361 426 00	balance weight 55 G		X	
9	928 361 415 00	balance weight 60 G		X	
9	928 361 416 00	balance weight 70 G		X	

Pos	Part Number	Name	Remarks	Qty	Model	Pos	Part Number	Name	Remarks	Qty	Model
9	928 361 417 00	balance weight 80 G		X							
10	928 361 420 01	retaining clip		X							
11	928 362 030 02	emergency wheel with collapsible tire	-91	1	CARRERA 2/4						
11	965 362 030 00	emergency wheel with collapsible tire	91- 92-	1 1	TURBO						
12	-	see group 0/01/05		X							
13	964 652 052 00	small electric compressor		1							
14	911 722 201 02	tyre pressure gauge		1							
15	901 361 410 50	balance stick-on weight 5 GR.		X							
15	901 361 410 00	balance stick-on weight 10 GR.		X							
15	901 361 411 50	balance stick-on weight 15 GR.		X							
15	901 361 411 00	balance stick-on weight 20 GR.		X							
15	901 361 412 50	balance stick-on weight 25 GR.		X							
15	901 361 412 00	balance stick-on weight 30 GR.		X							
15	901 361 413 50	balance stick-on weight 35 GR.		X							
15	901 361 413 00	balance stick-on weight 40 GR.		X							
15	901 361 414 50	balance stick-on weight 45 GR.		X							
15	901 361 414 00	balance stick-on weight 50 GR.		X							
15	901 361 415 50	balance stick-on weight 55 GR.		X							
15	901 361 415 00	balance stick-on weight 60 GR.		X							
		- -- E N D -- -									

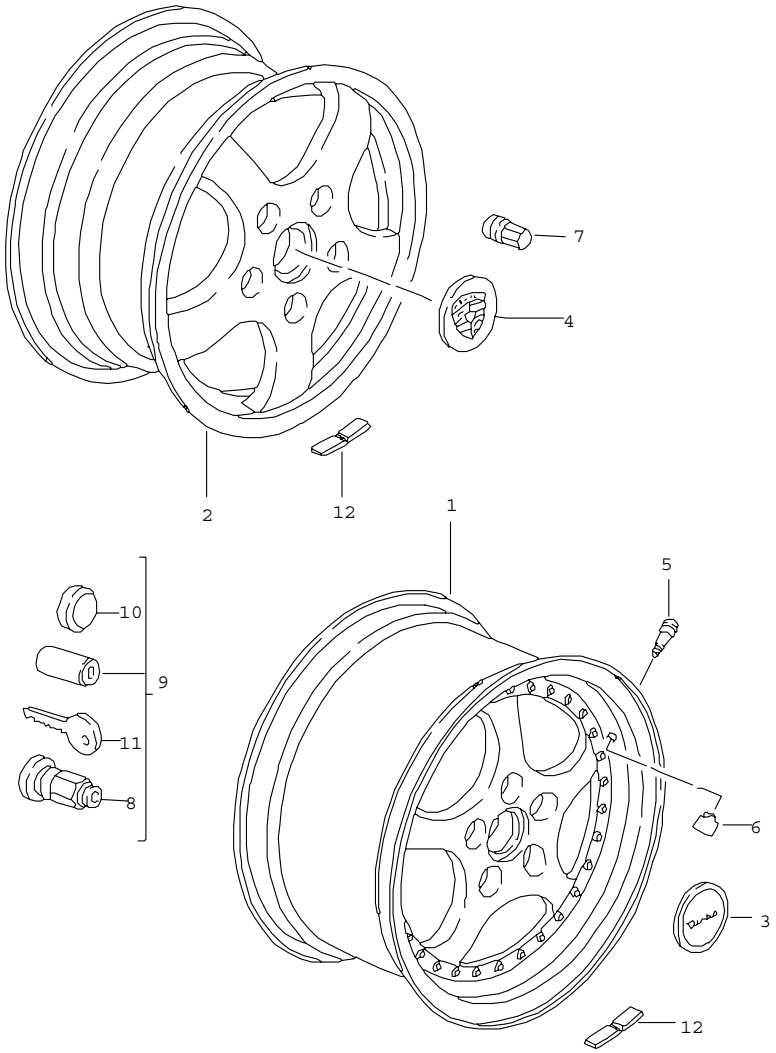

Pos	Part Number	Name	Remarks	Qty	Model
		wheels	93-		TURBO 3,6
1	965 362 136 00	alloy wheel silver metallic rim flange polished 8 J X 18 ET 52	/V	2	
1	965 362 136 01	alloy wheel polished 8 J X 18 ET 52	/V	2	
1	965 362 140 00	alloy wheel silver metallic rim flange polished 10J X 18 ET 61	/H	2	
1	965 362 140 01	alloy wheel polished 10J X 18 ET 61	/H	2	
2	965 362 124 01	alloy wheel silver metallic 7JX17 ET 55 for winter use	V	2	
2	965 362 126 01	alloy wheel silver metallic 8JX17 ET 52 for winter use	/H -93	2	
2	993 362 126 00	alloy wheel	/H 94-	2	
	61M	silver metallic 8X17 ET 52 for winter use			
3	965 361 032 01	hub cap polished		4	
3	965 361 303 00	hub cap silver metallic		4	
4	993 361 303 00	hub cap		4	
	61M	silver metallic			
5	900 265 001 50	valve		4	
6	965 361 561 00	valve support	/H	2	

Pos	Part Number	Name	Remarks	Qty	Model	Pos	Part Number	Name	Remarks	Qty	Model
7	999 182 003 36	wheel nut		16							
8	993 361 057 00	set lockable without lock		4							
9	993 361 057 00	set set lockable		1							
10	965 361 167 00	cap		4							
11	965 361 169 00	key		X							
12	901 361 410 50	balance stick-on weight 5 GR.		X							
12	901 361 410 00	balance stick-on weight 10 GR.		X							
12	901 361 411 50	balance stick-on weight 15 GR.		X							
12	901 361 411 00	balance stick-on weight 20 GR.		X							
12	901 361 412 50	balance stick-on weight 25 GR.		X							
12	901 361 412 00	balance stick-on weight 30 GR.		X							
12	901 361 413 50	balance stick-on weight 35 GR.		X							
12	901 361 413 00	balance stick-on weight 40 GR.		X							
10	901 361 414 50	balance stick-on weight 45 GR.		X							
10	901 361 414 00	balance stick-on weight 50 GR.		X							
10	901 361 415 50	balance stick-on weight 55 GR.		X							
10	901 361 415 00	balance stick-on weight 60 GR.		X							
		- -- E N D -- -									

Model	Year	MG	SG	Illustration	Restrictions	Update	17:50	24.11.2005	PORSCHE PET PORSCHE
964	94	6	02	602-00		194			

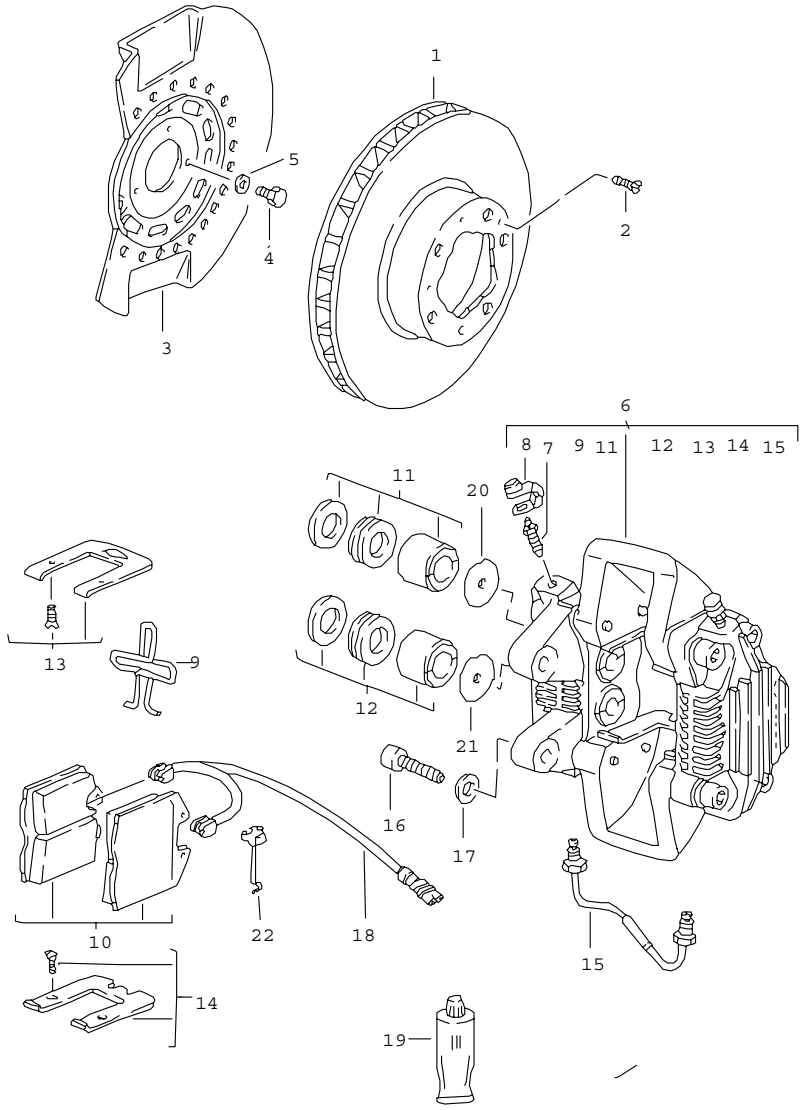

Pos	Part Number	Name	Remarks	Qty	Model
		disc brake front axle			CARRERA 2
1	964 351 041 02	brake disc		2	
2	N 033 167 1	countersunk-head screw M 6 X 12		8	
3	964 351 804 02	protective plate	/R	1	
(3)	964 351 803 02	protective plate	/L	1	
4	999 072 005 09	hexagon-head bolt M 6 X 12		6	
5	N 011 666 7	washer A 6,4		6	
6	964 351 421 02	fixed calliper without pad	/L -90	1	
6	964 351 421 02	fixed calliper without pad	/L 91-	1	
6	964 351 422 02	fixed calliper without pad	/R -90	1	
6	964 351 422 02	fixed calliper without pad	/R 91-	1	
7	930 351 919 00	ventilation valve		4	
8	930 351 927 00	dust boot		4	
9	951 352 950 00	expanding spring		2	
10	964 351 939 03	set of brake pads		1	
11	951 351 919 11	set of seals 40 MM $		4	
12	951 351 919 10	repair kit 36 MM $		4	
13	964 351 959 01	repair kit spring plate		2	
14	964 351 959 00	repair kit spring plate		2	
15	951 351 971 00	connecting line		2	
16	N 010 137 2	hexagon-head bolt M12 X 1,5 X 35		4	
17	900 028 014 02	spring washer B 12		4	

Pos	Part Number	Name	Remarks	Qty	Model	Pos	Part Number	Name	Remarks	Qty	Model
18	A 964 612 363 01	warning contact		2							
18	964 612 363 01	warning contact		2							
-	944 612 627 00	support		2							
19	000 043 117 00	brake cylinder paste 1 50-g tube		X							
19	000 043 020 00	optimoly 1 tube 100 g		X							
20	964 351 096 02	damping plate 40 MM $		4							
21	964 351 096 01	damping plate 36 MM $		4							
22	928 612 361 00	cable holder		2							
		- -- E N D -- -									

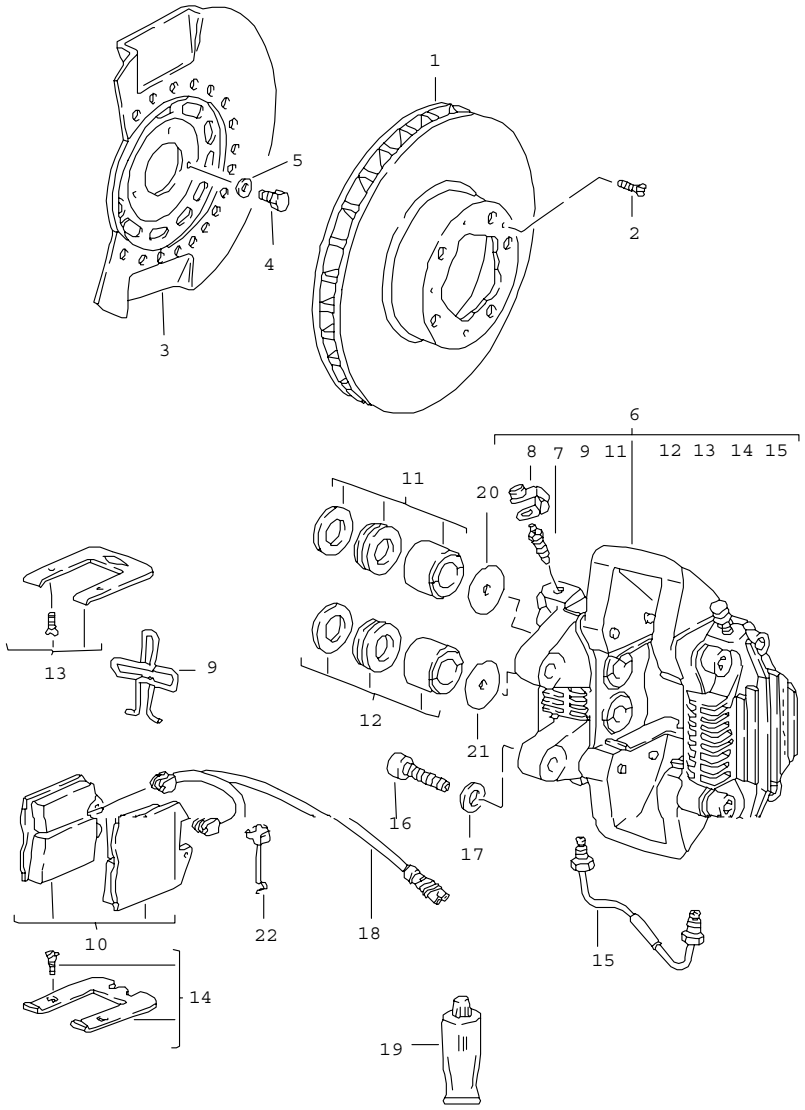

Pos	Part Number	Name	Remarks	Qty	Model
		disc brake front axle			CARRERA 4 TURBO-LOOK CARRERA 4
1	964 351 041 02	brake disc		2	
2	N 033 167 1	countersunk-head screw M 6 X 12		8	
3	964 351 804 02	protective plate	/R	1	
(3)	964 351 803 02	protective plate	/L	1	
4	999 072 005 09	hexagon-head bolt M 6 X 12		6	
5	N 011 666 7	washer A 6,4		6	
6	964 351 421 02	fixed calliper without pad	/L	1	
6	964 351 422 02	fixed calliper without pad	/R	1	
7	930 351 919 00	ventilation valve		4	
8	930 351 927 00	dust boot		4	
9	951 352 950 00	expanding spring		2	
10	965 352 939 04	set of brake pads		1	
11	951 351 919 11	set of seals 40 MM $		4	
12	951 351 919 10	repair kit 36 MM $		4	
13	964 351 959 01	repair kit spring plate		2	
14	964 351 959 00	repair kit spring plate		2	
15	951 351 971 00	connecting line		2	
16	N 010 137 2	hexagon-head bolt M12 X 1,5 X 35		4	
17	900 028 014 02	spring washer B 12		4	
18	964 612 363 01	warning contact		2	
-	944 612 627 00	support		2	

Pos	Part Number	Name	Remarks	Qty	Model	Pos	Part Number	Name	Remarks	Qty	Model
19	000 043 117 00	brake cylinder paste 1 50-g tube		X							
19	000 043 020 00	optimoly 1 tube 100 g		X							
20	964 351 096 02	damping plate 40 MM $		4							
21	964 351 096 01	damping plate 36 MM $		4							
22	928 612 361 00	cable holder		2							
		- -- E N D -- -									

Model	Year	MG	SG	Illustration	Restrictions	Update				
964	94	6	02	602-05		194	17:51	24.11.2005	PORSCHE	PET	PORSCHE

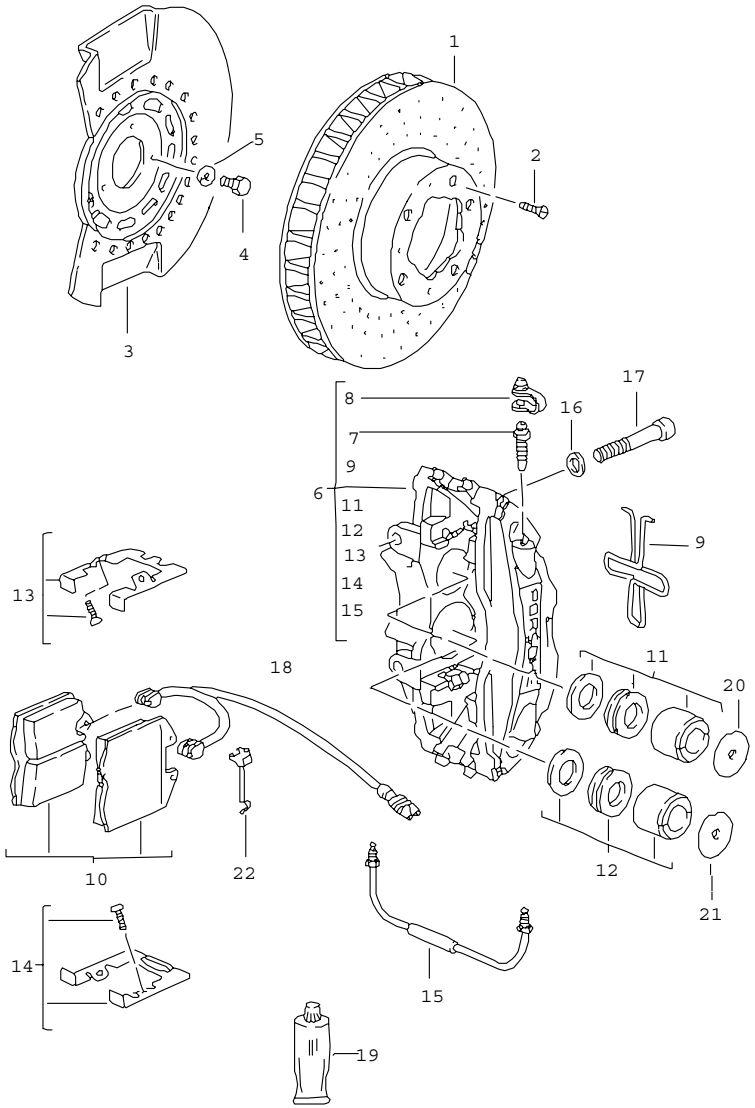

Pos	Part Number	Name	Remarks	Qty	Model
		disc brake front axle			TURBO TURBO 3,6 TURBO-LOOK CARRERA 2 CARRERA RS
1	965 351 043 00	brake disc	/L /L	1 1	TURBO/LOOK CARRERA RS
(1)	965 351 045 00	brake disc	/L	1	TURBO 3,6
1	965 351 044 00	brake disc	/R /R	1 1	TURBO/LOOK CARRERA RS
(1)	965 351 046 00	brake disc	/R	1	TURBO 3,6
2	N 033 167 1	countersunk-head screw AM 6X12		8	
3	964 351 803 04	protective plate	/L	1	TURBO/LOOK CARRERA 2
3	964 351 803 80	protective plate	/L	1	CARRERA RS
3	964 351 804 04	protective plate	/R	1	TURBO/LOOK CARRERA 2
3	964 351 804 80	protective plate	/R	1	CARRERA RS
4	999 072 005 09	hexagon-head bolt M 6 X 12		6	
5	N 011 666 7	washer A 6,4		6	
6	965 351 423 01	fixed calliper without pad	/L /L	1 1	TURBO/LOOK CARRERA RS
6	A 993 351 425 10	fixed calliper without pad	/L	1	TURBO 3,6
6	993 351 425 10	fixed calliper without pad	/L	1	TURBO 3,6
6	965 351 424 01	fixed calliper without pad	/R	1 1	TURBO/LOOK CARRERA RS
6	A 993 351 426 10	fixed calliper without pad	/R	1	TURBO 3,6
6	993 351 426 10	fixed calliper without pad	/R	1	TURBO 3,6
7	930 351 919 00	ventilation valve		1	
8	930 351 927 00	dust boot		4	

Pos	Part Number	Name	Remarks	Qty	Model	Pos	Part Number	Name	Remarks	Qty	Model
9	928 351 950 01	expanding spring		2							
10	965 351 939 02	set of brake pads	91	1	TURBO						
10	993 351 939 01	set of brake pads	92-	1 1	TURBO/LOOK CARRERA RS						
10	928 351 949 03	brake pad		1	TURBO 3,6						
11	928 351 919 10	repair kit 44 MM $		4							
12	951 351 919 10	repair kit 36 MM $		4							
13	993 351 959 01	repair kit spring plate		2							
13	993 351 959 03	repair kit spring plate		2	TURBO 3,6						
14	993 351 959 00	repair kit spring plate		2							
14	993 351 959 02	repair kit spring plate		2	TURBO 3,6						
15	959 351 971 00	connecting line		2							
16	N 011 564 2	washer A 13		4							
17	900 067 268 02	pan-head screw M 12 X 1,5 X 80		4							
18	964 612 363 01	warning contact	-92	2							
-	944 612 627 00	support		2							
18	993 612 368 00	warning contact	93-	2							
19	000 043 020 00	optimoly 1 tube 100 g		X							
(19)	000 043 117 00	brake cylinder paste 1 50-g tube		X							
20	965 351 096 00	damping plate 44 MM $		4							
21	964 351 096 01	damping plate 36 MM $		4							
22	928 612 361 00	cable holder		2							
		- -- E N D -- -									

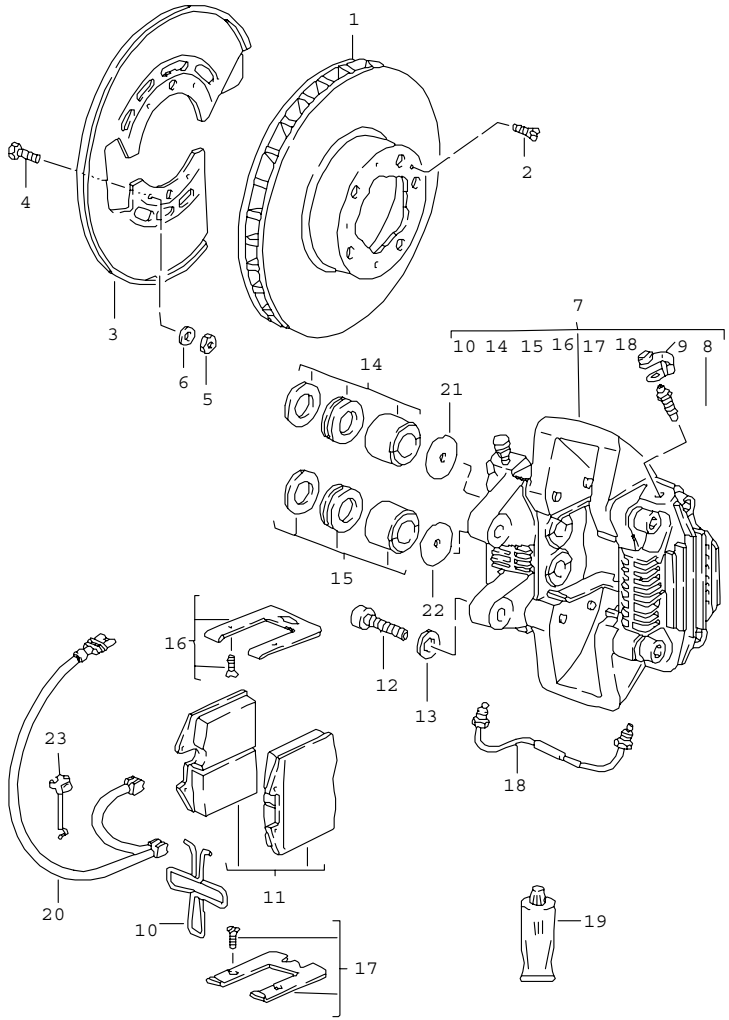

Pos	Part Number	Name	Remarks	Qty	Model
		disc brake rear axle	89-		CARRERA 4 TURBO-LOOK CARRERA 4
1	951 352 041 02	brake disc		2	
1	965 352 041 01	brake disc	/L	1	TURBO-LOOK
(1)	965 352 042 01	brake disc	/R	1	TURBO-LOOK
2	N 033 167 1	countersunk-head screw AM 6 X 12		4	
3	964 352 801 00	protective plate		2	
4	900 119 101 02	screw M 6 X 20		6	
5	900 910 010 09	lock nut		6	
6	N 011 666 7	washer A 6,4		6	
7	928 352 421 03	fixed calliper without pad	/L	1	
7	965 352 421 02	fixed calliper without pad	/L	1	TURBO-LOOK
7	928 352 422 03	fixed calliper without pad	/R	1	
7	965 352 422 02	fixed calliper without pad	/R	1	TURBO-LOOK
8	930 351 919 00	ventilation valve		2	
9	930 351 927 00	dust boot		2	
10	951 352 950 00	expanding spring		2	
11	965 352 939 04	set of brake pads		1	
12	900 067 170 02	pan-head screw M 12 X 1,5 X 40		4	
(12)	900 082 077 02	hexagon-head bolt M 12 X 1,5 X 37		4	TURBO-LOOK
13	900 028 014 02	spring washer		4	
14	951 352 919 11	set of seals 30 MM $		4	
(14)	965 352 919 10	set of seals 34 MM $		4	TURBO-LOOK

Pos	Part Number	Name	Remarks	Qty	Model
15	951 352 919 10	set of seals 28 MM $		4	
(15)	951 352 919 11	set of seals 30 MM$		4	TURBO-LOOK
16	993 352 959 01	repair kit spring plate		2	
17	993 352 959 00	repair kit spring plate		2	
18	951 352 971 00	connecting line		2	
19	000 043 117 00	brake cylinder paste 1 50-g tube		X	
20	964 612 365 01	warning contact		2	
-	944 612 627 00	support		2	
21	964 352 096 00	damping plate 30 MM $		4	
(21)	965 352 096 01	damping plate 34 MM $		4	TURBO-LOOK
22	964 352 096 01	damping plate 28 MM $		4	
(22)	964 352 096 00	damping plate 30 MM $		4	TURBO-LOOK
23	928 612 361 00	cable holder		2	
		- -- E N D -- -			

Pos	Part Number	Name	Remarks	Qty	Model

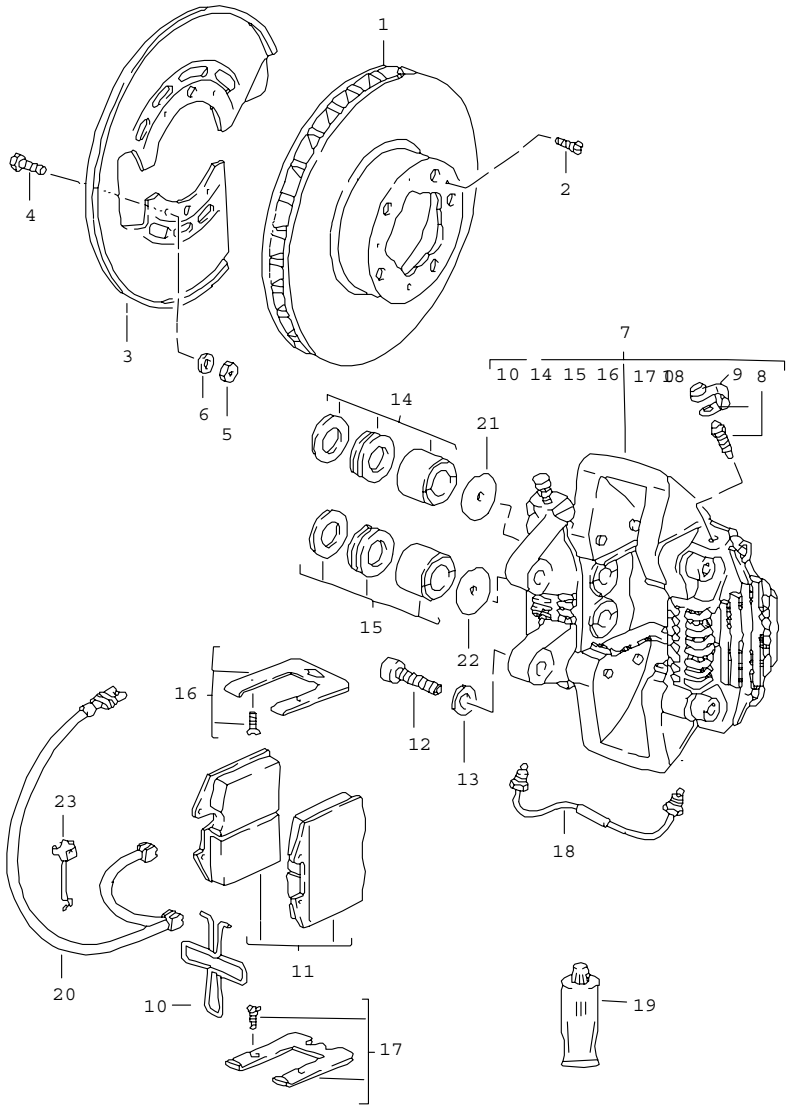

Pos	Part Number	Name	Remarks	Qty	Model
		disc brake rear axle	92- 92-		CARRERA 2 TURBO-LOOK CARRERA 2
1	951 352 041 02	brake disc		2	CARRERA 2
1	965 352 041 00	brake disc	/L -92	1	TURBO-LOOK CARRERA 2
1	965 352 041 01	brake disc	/L 93-	1	TURBO-LOOK CARRERA 2
1	965 352 042 00	brake disc	/R -92	1	TURBO-LOOK CARRERA 2
1	965 352 042 01	brake disc	/R 93-	1	TURBO-LOOK CARRERA 2
2	N 033 167 1	countersunk-head screw AM 6 X 12		4	
3	964 352 801 00	protective plate		2	
4	900 119 101 02	screw M 6 X 20		6	
5	900 910 010 09	lock nut		6	
6	N 011 666 7	washer A 6,4		6	
7	928 352 421 03	fixed calliper without pad	/L	1	CARRERA 2
7	965 352 421 02	fixed calliper without pad	/L	1	TURBO-LOOK
7	928 352 422 03	fixed calliper without pad	/R	1	CARRERA 2
7	965 352 422 02	fixed calliper	/R	1	TURBO-LOOK
8	930 351 919 00	ventilation valve		2	
9	930 351 927 00	dust boot		2	
10	951 352 950 00	expanding spring		2	
11	964 351 939 03	set of brake pads		1	CARREA 2
11	965 352 939 04	set of brake pads		1	CARRERA 2 TURBO-LOOK
12	900 067 170 02	pan-head screw M 12 X 1,5 X 40		4	CARRERA 2
12	900 082 077 02	hexagon-head bolt M 12X1,5X37		4	TURBO-LOOK

Pos	Part Number	Name	Remarks	Qty	Model
13	900 028 014 02	spring washer		4	
14	951 352 919 11	set of seals 30 MM $		4	CARRERA 2
(14)	965 352 919 10	set of seals 34 MM $		4	TURBO-LOOK
15	951 352 919 10	set of seals 28 MM $		4	CARRERA 2
(15)	951 352 919 11	set of seals 30 MM$		4	TURBO-LOOK
16	993 352 959 01	repair kit spring plate		2	
17	993 352 959 00	repair kit spring plate		2	
18	951 352 971 00	connecting line		2	
19	000 043 117 00	brake cylinder paste 1 50-g tube		X	
20	964 612 365 01	warning contact		2	
-	944 612 627 00	support		2	
21	964 352 096 00	damping plate 30 MM $		4	CARRERA 2
(21)	965 352 096 01	damping plate 34 MM$		4	TURBO-LOOK
22	964 352 096 01	damping plate 28 MM $		4	CARRERA 2
(22)	964 352 096 00	damping plate 30 MM$		4	TURBO-LOOK
23	928 612 361 00	cable holder		2	
		- -- E N D -- -			

Pos	Part Number	Name	Remarks	Qty	Model

Model	Year	MG	SG	Illustration	Restrictions	Update	17:51	24.11.2005	PORSCHE	PET	PORSCHE
964	94	6	03	603-03		194					

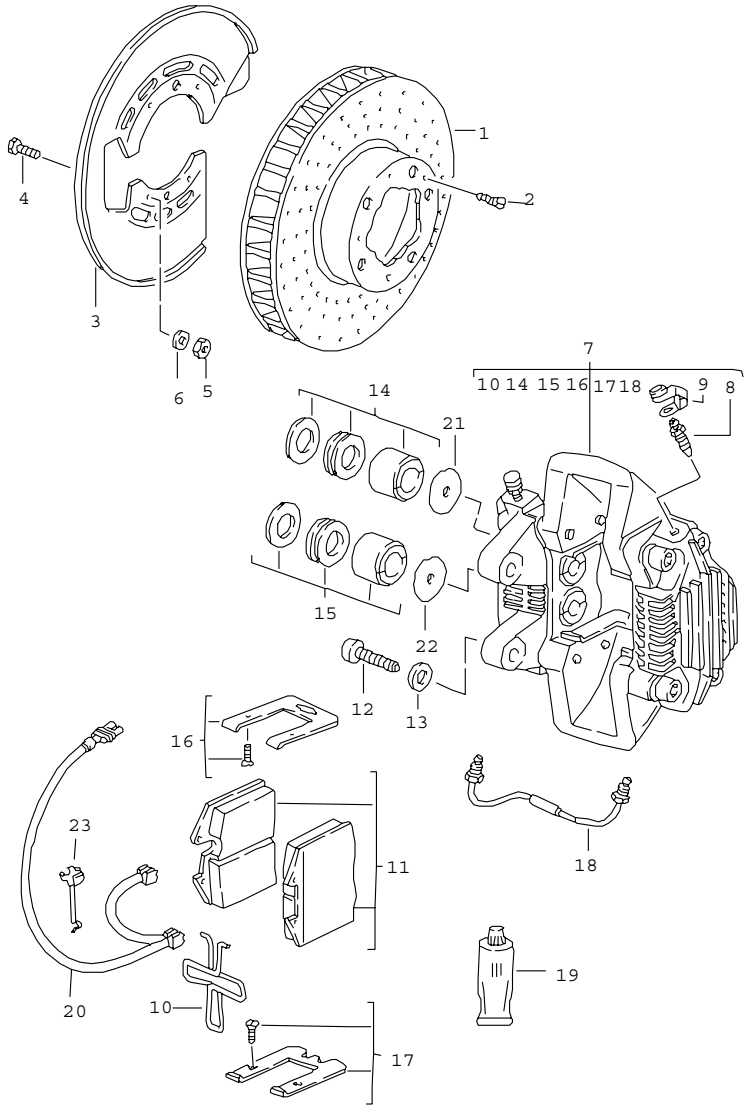

Pos	Part Number	Name	Remarks	Qty	Model
		disc brake rear axle			TURBO TURBO 3,6 CARRERA RS
(1)	965 352 041 00	brake disc	/L	1	TURBO
(1)	965 352 042 00	brake disc	/R	1	TURBO
1	951 352 041 91	brake disc		2	CARRERA RS
2	N 033 167 1	countersunk-head screw M 6X12		8	
3	964 352 801 00	protective plate		2	
4	900 119 101 02	screw M 6X20		12	
5	N 012 226 5	spring washer B 6		12	
6	900 910 010 09	lock nut M 6		12	
7	965 352 421 02	fixed calliper without pad	/L	1	TURBO
7	965 352 421 12	fixed calliper without pad red	/L	1	TURBO 3,6
7	965 352 422 02	fixed calliper without pad	/R	1	TURBO
7	965 352 422 12	fixed calliper without pad red	/R	1	TURBO 3,6
7	993 352 421 00	fixed calliper without pad	/L	1	CARRERA RS
7	993 352 422 00	fixed calliper without pad	/R	1	CARRERA RS
8	930 351 919 00	ventilation valve		2	
9	930 351 927 00	dust boot		2	
10	951 352 950 00	expanding spring		2	
11	965 352 939 00	set of brake pads	91	1	TURBO
11	965 352 939 04	set of brake pads	92-	1 1	TURBO CARRERA RS
12	900 082 077 02	hexagon-head bolt M 12 X 1,5 X 37		4	

Pos	Part Number	Name	Remarks	Qty	Model
12	900 067 170 02	pan-head screw M 12 X 1,5 X 40		4	CARRERA RS
13	900 028 014 02	spring washer B 12		4	
14	965 352 919 10	repair kit 34 MM $		4 4	TURBO CARRERA RS
15	951 352 919 11	set of seals 30 MM $		4 4	TURBO CARRERA RS
16	964 351 959 01	repair kit spring plate		2	
17	964 351 959 00	repair kit spring plate		2	
18	951 351 971 00	connecting line		2	
19	000 043 020 00	optimoly 1 tube 100 g		X	
(19)	000 043 117 00	brake cylinder paste 1 50-g tube		X	
20	964 612 365 01	warning contact		2	
-	944 612 627 00	support		2	
21	965 352 096 01	damping plate 34 MM $		4	
22	964 352 096 00	damping plate 30 MM $		4	
23	928 612 361 00	cable holder		2	
		- -- E N D -- -			

Pos	Part Number	Name	Remarks	Qty	Model

Model	Year	MG	SG	Illustration	Restrictions	Update				
964	94	6	03	603-05		194	17:52	24.11.2005	PORSCHE	PET	PORSCHE

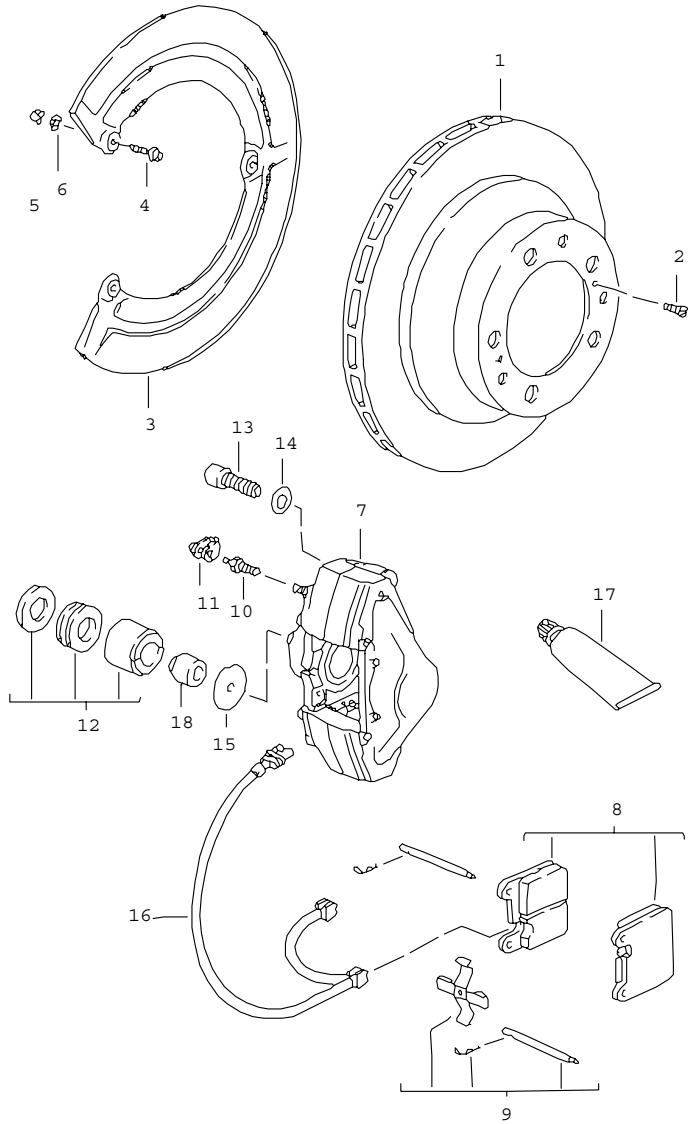

Pos	Part Number	Name	Remarks	Qty	Model
		disc brake rear axle see tpi GR.6 NR.11			CARRERA 2 CARRERA 2
1	951 352 041 02	brake disc		2	
2	N 033 167 1	countersunk-head screw		4	
3	964 352 801 00	protective plate		2	
4	900 119 101 02	screw		6	
5	900 910 010 09	lock nut		6	
6	N 011 666 7	washer A 6,4		6	
7	964 352 425 03	fixed calliper without pad F >>96MS4 06629 F >>96MS4 11516 F >>96MS4 31058 F >>96MS4 40726 F >>96MS4 53141 F >>96MS4 62093	/L	1	
7	964 352 425 05	fixed calliper without pad F 96MS4 06630>> F 96MS4 11517>> F 96MS4 31059>> F 96MS4 40727>> F 96MS4 53142>> F 96MS4 62094>>	/L	1	
(7)	964 352 426 03	fixed calliper without pad F >>96MS4 06629 F >>96MS4 11516 F >>96MS4 31058 F >>96MS4 40726 F >>96MS4 53141 F >>96MS4 62093	/R	1	
(7)	964 352 426 05	fixed calliper without pad F 96MS4 06630>> F 96MS4 11517>> F 96MS4 31059>> F 96MS4 40727>> F 96MS4 53142>> F 96MS4 62094>>	/R	1	
8	964 352 949 03	set of brake pads		1	

Pos	Part Number	Name	Remarks	Qty	Model	Pos	Part Number	Name	Remarks	Qty	Model
9	A 964 352 959 01	mounting parts		1							
9	964 352 959 01	mounting parts		1							
10	930 351 919 00	ventilation valve		2							
11	930 351 927 00	dust boot		2							
12	964 352 919 00	gasket set		2							
13	900 067 170 02	pan-head screw		4							
14	900 028 014 02	spring washer		4							
15	964 352 096 01	damping plate 28 MM $		4							
16	964 612 365 01	warning contact use also: 964 352 959 01		2							
-	944 612 627 00	support		2							
17	000 043 020 00	optimoly 1 tube 100 g		X							
17	000 043 117 00	brake cylinder paste 1 50-g tube		X							
18	964 352 963 01	vibration damper		4							
		- -- E N D -- -									

Model	Year	MG	SG	Illustration	Restrictions	Update	17:52	24.11.2005	PORSCHE PET PORSCHE
964	94	6	03	603-06		194			

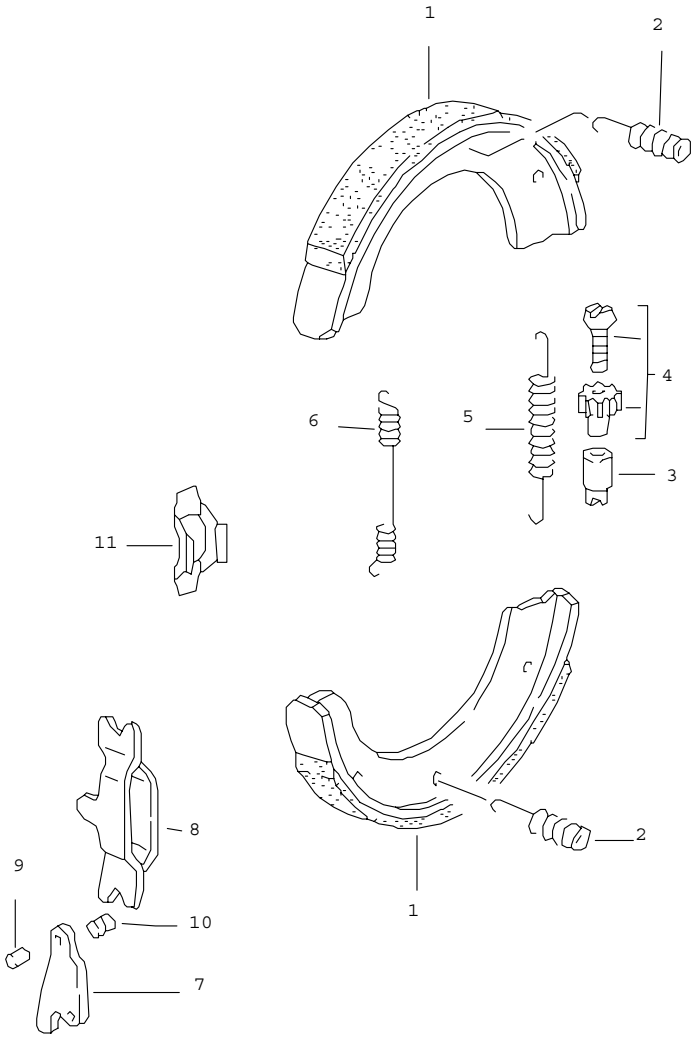

Pos	Part Number	Name	Remarks	Qty	Model
		handbrake			
1	996 352 993 00	repair kit		1	
2	928 352 957 02	compression spring		4	
3	911 352 944 00	bush		2	
4	911 352 098 00	adjusting screw		2	
5	901 352 932 10	return spring		2	
6	951 352 454 00	return spring		2	
7	993 352 073 00	push-button lock		2	
8	993 352 073 00	push-button lock		2	
9	993 352 737 00	bolt		2	
10	928 352 447 00	bolt		2	
11	951 352 807 00	supporting plate		2	
		- -- E N D -- -			

Model	Year	MG	SG	Illustration	Restrictions	Update	17:52	24.11.2005	PORSCHE	PET	PORSCHE
964	94	6	04	604-00		194					

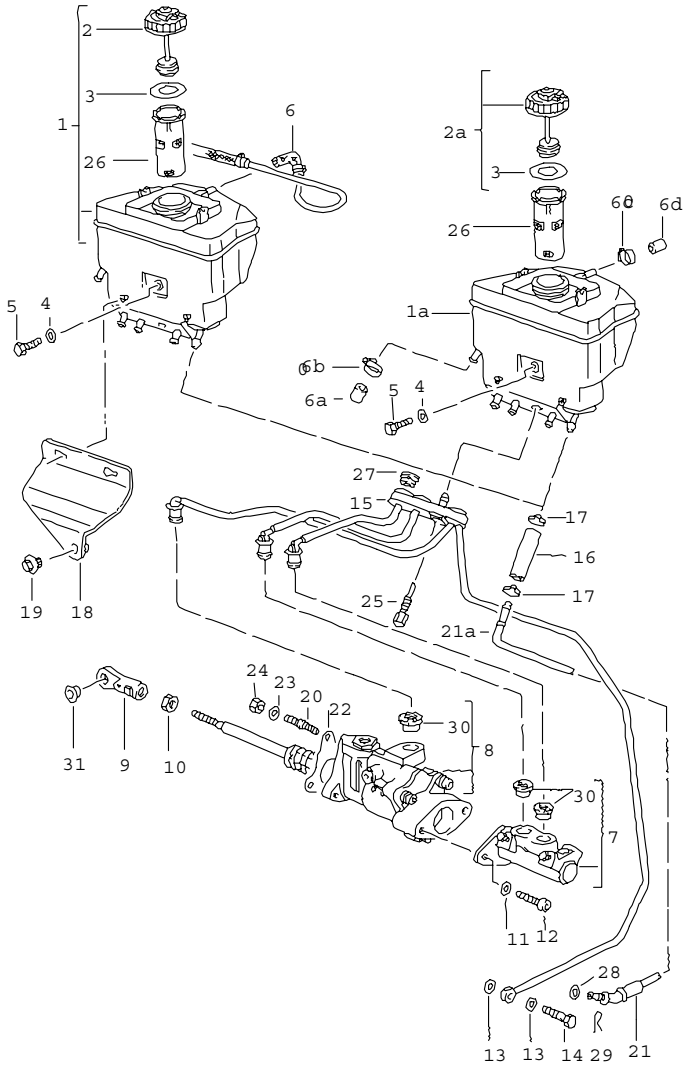

Pos	Part Number	Name	Remarks	Qty	Model
		brake fluid reservoir brake master cylinder brake booster see technical information GR.4 NR16/95			CARRERA 4 TURBO TURBO-LOOK CARRERA RS
1	A 964 355 013 50	brake fluid reservoir		1	
1	A 964 355 013 25	brake fluid reservoir		1	TURBO-LOOK M 249
1A	993 355 113 50	container		1	
2	A 964 355 181 50	threaded cover	-91	1	
2	A 964 355 181 51	threaded cover	92-	1	
2A	993 355 181 50	threaded cover with bleeding		1	
3	911 355 908 00	gasket		1	
4	N 011 666 7	washer		1	
5	999 072 005 09	hexagon-head bolt		1	
6	A 964 355 363 51	overflow hose	/LL	1	
6	A 964 355 364 50	overflow hose	/RL	1	
6A	911 355 327 00	cap		1	
6B	999 512 055 02	hose clamp		1	
6C	999 512 069 02	hose clamp		1	
6D	993 355 331 00	cap		1	
7	964 355 903 00	brake master cylinder		1	CARRERA 4 TURBO/LOOK
7	964 355 903 80	brake master cylinder		1	CARRERA RS
8	964 355 904 01	brake booster		1	CARRERA 4 TURBO/LOOK
8	964 355 904 80	brake booster		1	CARRERA RS
9	964 355 513 04	swivel head		1	
10	900 157 002 02	hexagon nut		1	
11	900 025 007 02	washer		2	
12	N 014 726 1	pan-head screw		2	

Pos	Part Number	Name	Remarks	Qty	Model
13	900 123 033 20	sealing ring		2	
14	900 175 002 02	screw		1	
15	964 355 121 51	harness	/LL	1	CARRERA 4
(15)	965 355 121 50	harness	/LL	1	TURBO/LOOK CARRERA RS
15	964 355 122 50	harness	/RL	1	CARRERA 4
(15)	965 355 122 50	harness	/RL	1	TURBO/LOOK CARRERA RS
16	999 181 021 50	hose		1	
17	999 512 445 00	clamp		2	
18	964 355 423 00	cover	/LL	1	
18	964 355 424 00	cover	/RL	1	
19	999 703 236 40	fastening screw		1	
20	999 061 092 02	stud		3	
21	964 355 227 53	intake pipe	/LL	1	
(21)	964 355 228 51	intake pipe	/RL	1	
21A	964 355 506 00	intake pipe	/RL	1	
22	964 355 851 00	gasket		1	
23	900 151 008 02	washer		3	
24	900 910 003 02	lock nut		3	
25	999 217 086 02	hexagon-head bolt		1	
26	964 355 187 01	bush		1	
27	999 702 164 50	rubber bush		3	
28	999 707 075 40	o-ring		1	
29	999 021 003 00	lock		1	
30	911 355 922 00	plug		3	
31	999 924 003 40	bush		1	
		- -- E N D -- -			

Pos	Part Number	Name	Remarks	Qty	Model

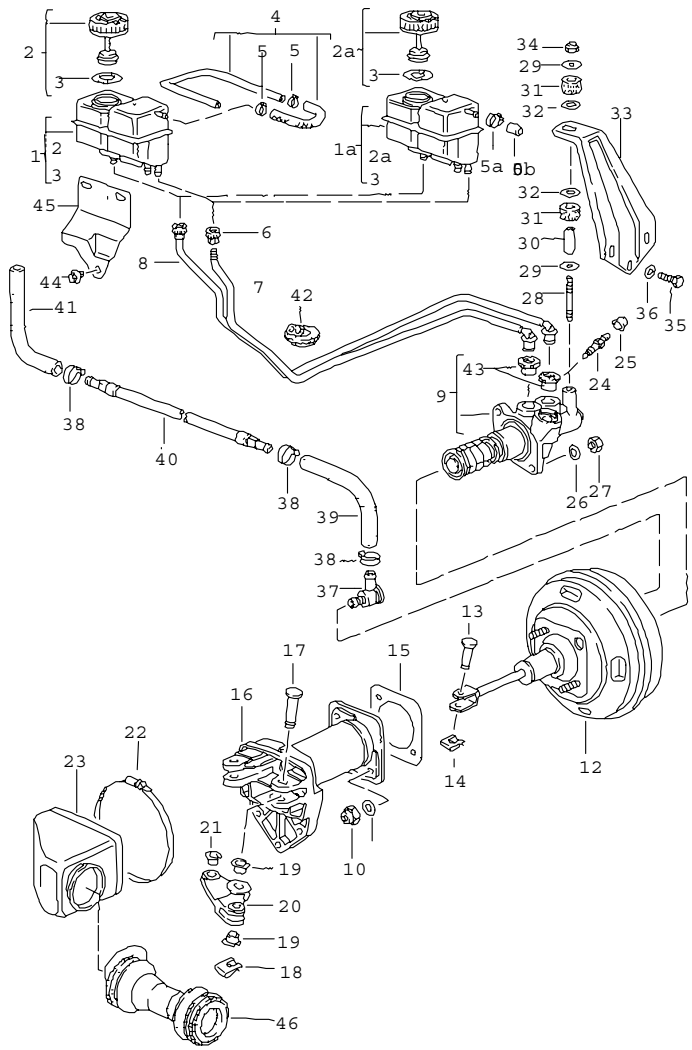

Pos	Part Number	Name	Remarks	Qty	Model
		brake fluid reservoir brake master cylinder			CARRERA 2
		see technical information GR.4 NR16/95			
1	A 964 355 017 03	brake fluid reservoir	-92	1	
1	A 964 355 017 04	brake fluid reservoir	93-	1	
1A	964 355 017 05	brake fluid reservoir		1	
2	A 964 355 351 00	threaded cover		1	
2A	993 355 351 00	threaded cover with bleeding		1	
3	911 355 908 00	gasket		1	
4	A 964 355 363 00	breather hose	/LL	1	
(4)	A 964 355 364 00	breather hose	/RL	1	
5	U 999 512 527 00	clamp		2	
5A	999 512 069 02	hose clamp		1	
5B	993 355 331 00	cap		1	
6	999 126 012 40	union nut		2	
7	964 355 285 01	line	/LL	1	
(7)	964 355 282 01	line	/RL	1	
8	964 355 283 01	line	/LL	1	
(8)	964 355 286 01	line	/RL	1	
9	964 355 015 03	brake master cylinder		1	
10	900 910 003 02	lock nut		2	
11	900 025 007 02	washer		2	
-	964 355 212 00	gasket		1	
12	964 355 182 01	brake booster		1	
13	999 088 016 02	bolt		2	
14	999 166 076 02	safety clip		2	
15	964 355 301 00	gasket		1	
16	964 355 495 03	bearing bracket	/LL	1	

Pos	Part Number	Name	Remarks	Qty	Model
16	964 355 496 03	bearing bracket	/RL	1	
17	999 088 020 02	bolt		1	
18	999 166 077 02	safety clip		1	
19	999 924 057 00	bush		2	
20	964 355 471 02	reverse lever		1	
21	999 924 058 00	bush		2	
22	N 024 521 1	hose clamp		1	
23	993 355 329 00	cap		1	
24	964 355 951 00	bleeder screw		1	
25	999 703 372 40	cap		1	
26	900 151 008 02	washer		2	
27	900 910 003 02	lock nut		2	
28	999 062 032 02	stud		1	
29	900 151 008 02	washer		2	
30	964 355 483 00	sleeve		1	
31	964 355 485 00	damping piece		2	
32	999 025 903 00	washer		2	
33	964 355 063 00	support		1	
33	964 355 064 00	support	/RL	1	
34	900 910 003 02	lock nut		1	
35	900 075 085 02	hexagon-head bolt		3	
36	900 025 007 02	washer		3	
37	928 355 660 00	check valve		1	
38	999 512 534 00	hose clamp		3	
39	999 181 022 51	hose 11,8 X 19,8		X	
40	964 355 571 01	vacuum line		1	
41	964 355 679 00	hose		1	
42	964 355 819 00	rubber sleeve		1	
43	999 702 182 40	rubber bush		2	
44	999 703 236 40	fastening screw	/LL	1	
(45)	964 355 448 00	cover	/RL	1	
45	964 355 447 00	cover		1	
46	964 355 397 03	bellows		1	
		- -- E N D -- -			

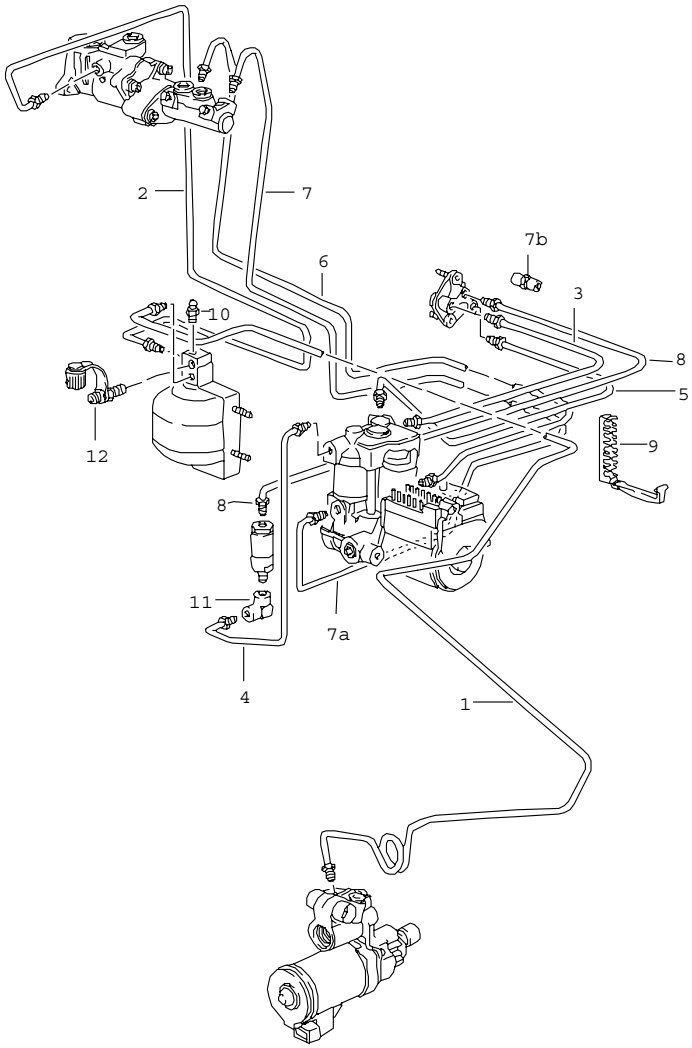

Pos	Part Number	Name	Remarks	Qty	Model
		brake lines body front section			CARRERA 4 CARRERA RS TURBO/LOOK
1	964 355 251 52	brake line		1	
2	964 355 171 52	brake line	/LL	1	
(2)	964 355 172 50	brake line	/RL	1	
3	964 355 326 50	brake line		1	
4	964 355 317 52	brake line		1	
5	964 355 327 50	brake line		1	
6	964 355 313 52	brake line	/LL	1	
(6)	964 355 314 50	brake line	/RL	1	
7	964 355 311 52	brake line	/LL	1	
(7)	964 355 312 50	brake line	/RL	1	
7A	964 355 310 50	brake line	/RL	1	
7B	914 355 661 00	intermediate piece	/RL	1	
8	964 355 315 51	brake line		1	
9	928 355 637 01	support		1	
10	964 355 809 00	ventilation valve		1	
11	901 355 615 00	angled pipe		1	
12	964 355 893 00	valve		1	
		- -- E N D -- -			

Model	Year	MG	SG	Illustration	Restrictions	Update			
964	94	6	04	604-06		194	17:53	24.11.2005	PORSCHE PET PORSCHE

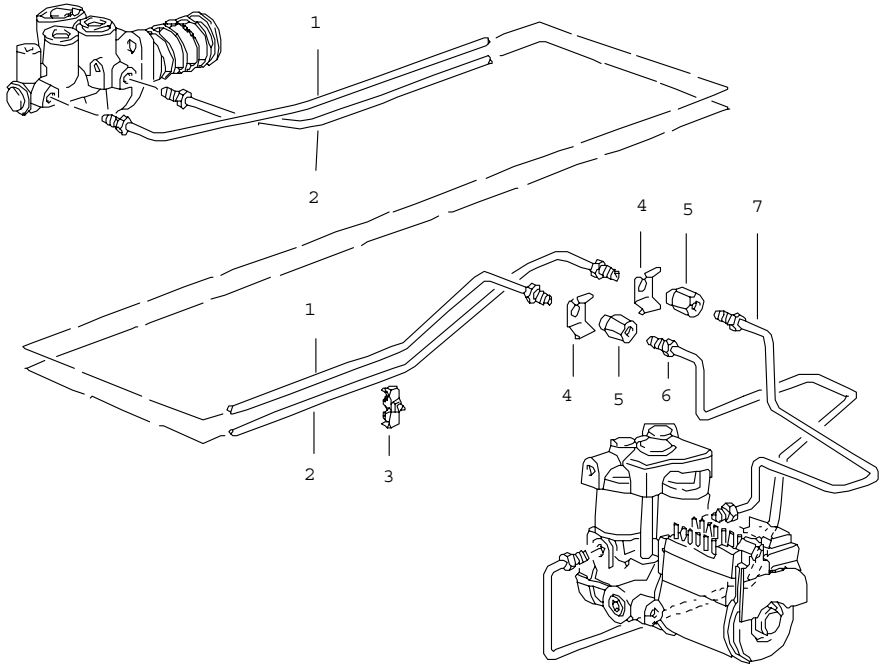

Pos	Part Number	Name	Remarks	Qty	Model
		brake lines body front section			CARRERA 2
1	964 355 311 27	brake line	/LL	1	
(1)	964 355 312 26	brake line	/RL	1	
2	964 355 313 27	brake line	/LL	1	
(2)	964 355 314 27	brake line	/RL	1	
3	999 591 880 40	support		1	
4	803 611 715	retainer spring		2	
5	951 355 661 00	intermediate piece		2	
6	964 355 315 26	brake line		1	
7	964 355 317 27	brake line		1	
		- -- E N D -- -			

Model	Year	MG	SG	Illustration	Restrictions	Update	17:53	24.11.2005	PORSCHE PET PORSCHE
964	94	6	04	604-10		194			

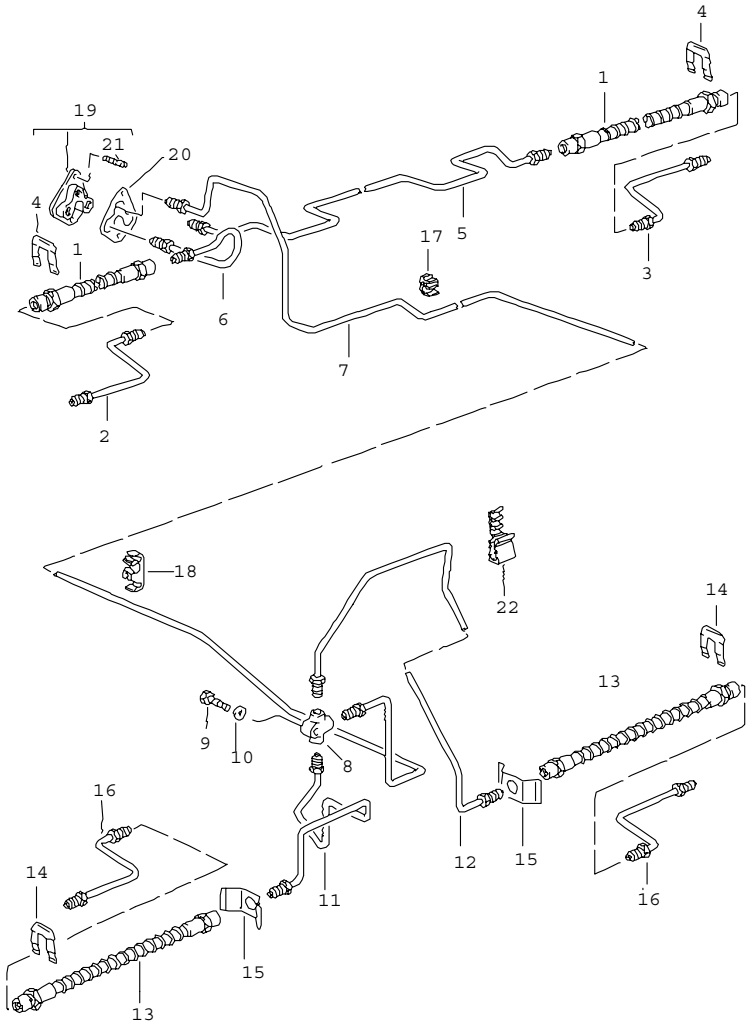

Pos	Part Number	Name	Remarks	Qty	Model
		brake lines front axle underbody rear axle			
1	A 993 355 139 00	brake hose		2 2	CARRERA 2/4 CARRERA RS
1	993 355 139 00	brake hose		2 2	CARRERA 2/4 CARRERA RS
1	965 355 139 00	brake hose		2	TURBO/LOOK
2	964 355 581 03	brake line	/VL	1 1	CARRERA 2/4 CARRERA RS
2	965 355 581 01	brake line	/VL	1	TURBO/LOOK
3	964 355 582 03	brake line	/VR	1 1	CARRERA 2/4 CARRERA RS
3	965 355 582 01	brake line		1	TURBO/LOOK
4	999 166 071 01	support		2	
5	964 355 176 12	brake line front	/R	1	
6	964 355 175 11	brake line front	/L	1	
7	964 355 179 02	brake line	/LL	1	
7	964 355 180 00	brake line	/RL	1	
8	113 611 755	distributing piece	-91	1	
8	914 355 667 00	distributor	92-	1	
9	900 075 017 02	hexagon-head bolt		1	
10	N 011 524 7	washer		1	
11	964 355 189 01	brake line rear	/L	1	
12	964 355 190 01	brake line rear	/R	1	
13	911 355 087 00	brake hose		2	
14	999 166 071 01	retainer spring		2	
15	803 611 715	brake hose bracket		2	
16	964 355 191 00	brake line		2 2	CARRERA2/4 CARRERA RS

Model	Year	MG	SG	Illustration	Restrictions	Update			
964	94	6	04	604-10		194	17:53	24.11.2005	PORSCHE PET PORSCHE

Pos	Part Number	Name	Remarks	Qty	Model	Pos	Part Number	Name	Remarks	Qty	Model
16	965 355 191 00	brake line		2	TURBO/LOOK						
17	999 591 930 40	support		10							
18	999 591 880 40	support		2							
19	964 355 650 00	intermediate piece		1							
20	964 355 752 00	gasket		1							
21	900 081 060 02	stud		2							
22	999 591 921 40	support		2							
		- -- E N D -- -									

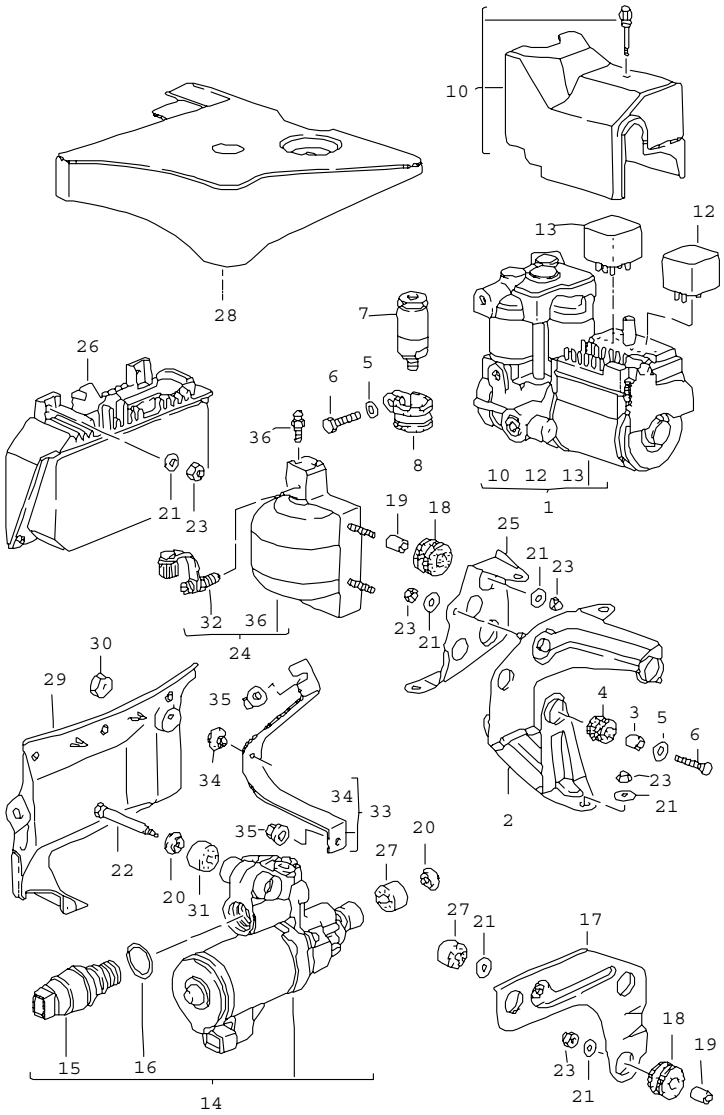

Pos	Part Number	Name	Remarks	Qty	Model
		hydraulic unit anti-lock brake system control			
1	A 964 355 955 00	hydraulic unit	-91	1	CARRERA 2/4
1	964 355 955 00	hydraulic unit		1	CARRERA 2/4
1	A 928 355 955 00	hydraulic unit	-91	1	TURBO/LOOK
1	928 355 955 00	hydraulic unit		1 1	TURBO/LOOK CARRERA 2/4 CARRERA RS
2	964 355 433 51	support		1	
3	928 355 633 00	bush		3	
4	928 355 635 00	rubber mounting		3	
5	N 011 666 7	washer B 6,4		3	
6	N 010 219 2	hexagon-head bolt M 6 X 28		3	
7	A 964 355 305 10	regulator		1	CARRERA 4
7	964 355 305 10	regulator see tpi GR.6 NR.11		1 1	CARRERA RS
7	964 355 305 00	regulator only together with fixed calliper 964.352.425.03 964.352.426.03 964.352.425.05 964.352.426.05		1	CARRERA 2
7	964 355 305 10	regulator		1	CARRERA 2
7	965 355 305 01	regulator		1	TURBO/LOOK CARRERA 2
7	928 355 305 02	brake pressure regulator		1	TURBO-LOOK CARRERA 4
7	928 355 305 02	regulator		1	TURBO-LOOK CARRERA 4
8	N 020 647 1	clamp		1	
10	928 355 960 01	cap		1	
12	928 618 930 01	relay		1	

Pos	Part Number	Name	Remarks	Qty	Model
13	928 618 931 02	relay		1	
14	A 964 355 901 01	pump		1 1 1	CARRERA 4 CARRERA RS TURBO/LOOK CARRERA 2/4
(14)	993 355 953 01	pump		1 1 1	CARRERA 4 CARRARA RS TURBO/LOOK CARRERA2/4
15	964 606 904 00	pressure switch		1 1 1	CARRERA 4 TURBO/LOOK CARRERA 2/4 CARRERA RS
16	999 707 094 40	o-ring		1 1 1	CARRERA 4 CARRERA RS TURBO/LOOK CARRERA 2/4
17	964 355 465 00	support		1 1 1	CARRERA 4 CARRERA RS TURBO/LOOK
18	964 356 635 00	rubber mounting		5 1 1	CARRERA 4 CARRERA RS TURBO/LOOK CARRERA 2/4
19	928 355 633 00	bush		5 5 5	CARRERA 4 CARRERA RS TURBO/LOOK CARRERA 2/4
20	999 025 202 02	washer		2 2 2	CARRERA 4 CARRERA RS TURBO/LOOK CARRERA 2/4
21	N 011 666 7	washer		2	
22	999 074 043 02	hexagon-head bolt		1	
23	900 910 010 09	lock nut		3	
24	964 355 109 16	pressure accumulator		1 1 1	CARRERA 4 CARRERA RS TURBO/LOOK CARRERA 2/4
25	964 355 451 00	support		1	
26	964 618 126 01	control unit		1	CARRERA 4
26	964 618 119 00	control unit		1 1 1	CARRERA 2 CARRERA RS TURBO/LOOK CARRERA 2/4
27	964 355 908 00	sleeve		2	
28	964 355 203 01	cover		1	
28	964 355 203 02	cover	/L 93-	1	M 545
28	964 355 203 80	cover		1	CARRERA RS
29	964 355 101 50	cover		1 1 1	CARRERA 4 CARRERA RS TURBO/LOOK CARRERA 2/4
30	999 049 012 40	plastic nut		2 2 2	CARRERA 4 CARRERA RS TURBO/LOOK CARRERA 2/4
31	964 355 906 00	sleeve		1	
32	964 355 893 00	valve		1 1 1	CARRERA 4 CARRERA RS TURBO/LOOK CARRERA 2/4
33	964 555 087 00	protective bracket	93-	2	CARRERA 4 TURBO/LOOK
34	999 703 183 40	buffer	93-	2	CARRERA 4 TURBO/LOOK
35	999 049 008 40	nut	93-	4	CARRERA 4 TURBO/LOOK
36	964 355 809 00	ventilation valve		1	

- -- E N D -- -

Model	Year	MG	SG	Illustration	Restrictions	Update		
964	94	6	98	REP		194	9:49	25.11.2005

Pos	Part Number	Name	Remarks	Qty	Model
		repair kits set of brake pads front axle rear axle			
>>	> 964 351 939 03	set of brake pads comprising: brake pad	/V	2 4	CARRERA 2
>>	> 965 352 939 04	set of brake pads comprising: brake pad	/V /H	2 4	CARRERA 4 CARRERA 4
>>	> 964 352 949 03	set of brake pads comprising: brake pad	/H -92	1 4	CARRERA 2
>>	> 964 351 939 03	set of brake pads comprising: brake pad	93-	2	CARRERA 2
>>	> 993 351 939 01	set of brake pads comprising: brake pad	/V /V /V	1 1 1 4	TURBO TURBO-LOOK CARRERA RS
>>	> 928 351 949 03	brake pad comprising: brake pad	/V	1 4	TURBO 3,6
>>	> 965 352 939 04	set of brake pads comprising: set of brake pads	/H /H /H /H	1 1 4	TURBO TURBO 3,6 TURBO-LOOK CARRERA RS
		- -- E N D -- -			

Model	Year	MG	SG	Illustration	Restrictions	Update				
964	94	7	01	701-00		194	17:53	24.11.2005	PORSCHE	PET	PORSCHE

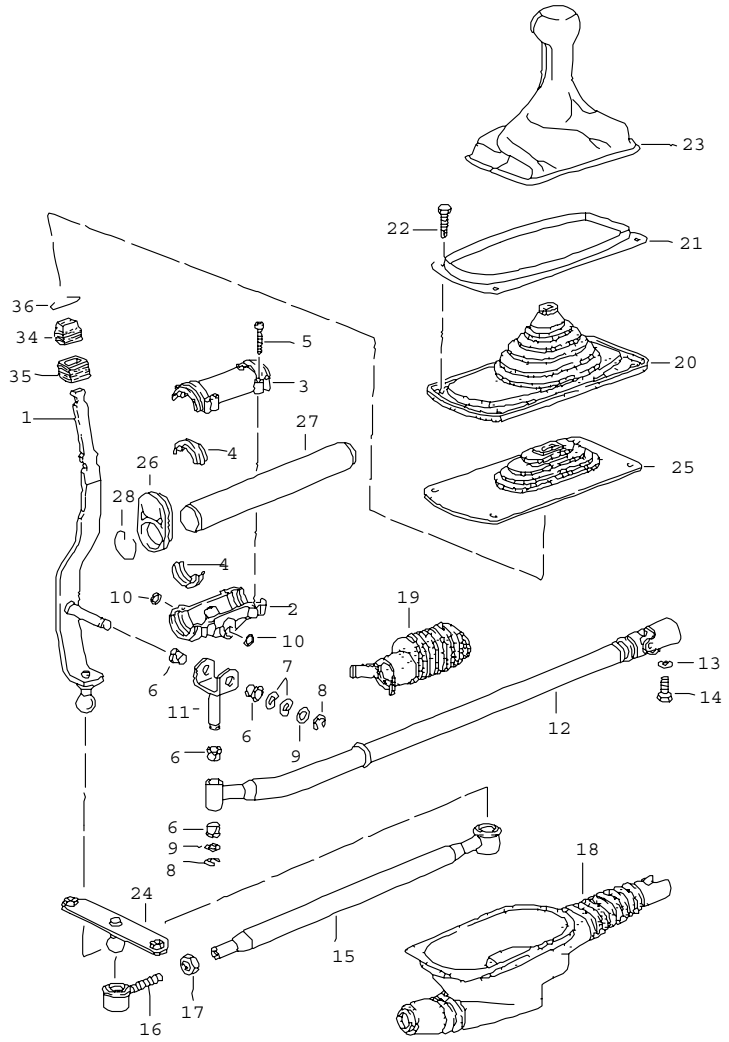

Pos	Part Number	Name	Remarks	Qty	Model
		transmission control			
1	964 424 015 04	gearshift lever		1 1	CARRERA TURBO/LOOK
1	964 424 015 08	gearshift lever		1	CARRERA RS
2	964 424 104 05	slide		1	
3	964 424 103 05	slide		1	
4	964 424 115 00	insert		4	
5	900 067 148 02	pan-head screw		4	
6	999 924 002 40	plain bearing		2	
7	900 234 510 02	support washer		2	
8	N 012 439 2	lock washer		1	
9	900 028 005 02	spring washer		1	
10	999 701 012 50	o-ring		2	
11	964 424 017 00	fork		1	
11	964 424 017 01	fork		1	CARRERA RS
12	964 424 020 06	gear shift rod		1	CARRERA 4
12	964 424 019 32	gear shift rod	-92	1	CARRERA 2 TURBO/LOOK
12	964 424 019 08	gear shift rod	93-	1	CARRERA 2 TURBO/LOOK
13	N 011 654 2	washer		1	
14	999 074 042 02	fit bolt		1	CARRERA 4
14	999 074 023 02	fit bolt		1 1	CARRERA 2 TURBO
15	964 424 011 01	guide tube		1	CARRERA 4
(15)	964 424 011 31	guide tube		1 1	CARRERA 2 TURBO/LOOK
16	928 424 005 01	angular joint		1	
17	N 011 010 6	hexagon nut		1	
18	964 424 292 02	rubber sleeve		1	CARRERA 4
18	964 424 292 02	rubber sleeve		1 1	CARRERA 2 TURBO/LOOK

Pos	Part Number	Name	Remarks	Qty	Model
19	964 424 294 03	rubber boot		1	CARRERA 4
19	964 424 294 31	rubber boot		1 1 1	CARRERA 2 TURBO/LOOK CARRERA RS
20	993 424 139 00	bellows		1	
21	964 424 134 00	frame		1	
22	900 075 010 02	hexagon-head bolt		4	
23	964 424 075 02	gearshift knob		1	
	8YR	black			
	2LX	mahogany	-90		
	7JX	marine blue	-90		
	7LD	burgundy	-90		
	7VX	linen	-90		
	2WH	cashmere beige	-90		
	5VT	silk grey	-90		
	2WT	slate grey	-90		
	7KC	venetian blue	-90		
	4MT	velvet red	-90		
	6XL	classic grey	91-		
	9YL	cobalt blue	91-		
	6YL	magenta	91-		
	4YU	cashmere beige	91-		
	8ZL	light grey	91-		
	L15	scala red	91-		
	A45	greenwich grey	91-		
	M05	matador red	91-		
	D35	carrara grey	91-		
	J25	sherwood green	91-		
	H05	marine blue	91-		
23	964 424 075 03	gearshift knob		1	CARRERA RS
	1AJ	black			
23	964 424 075 03	gearshift knob		1	
	1AJ	black			SPEEDSTER
	L29	guards red			SPEEDSTER
	2XR	pearl grey			SPEEDSTER
	G55	maritime blue			SPEEDSTER
	U28	speed yellow			SPEEDSTER
23	964 424 075 06	gearshift knob		1	
	E38	rubicon grey			M 096
	1AJ	black			
24	964 424 055 00	bearing plate		1	CARRERA 2 TURBO/LOOK
25	964 424 141 00	bellows		1	
26	964 424 224 01	bearing sleeve	-91	2	
26	964 424 028 00	bearing sleeve	92-	2	
27	964 424 131 02	pipe		1	
28	999 178 007 02	circlip		2	
34	931 424 111 00	damper		1	
35	931 424 110 00	damper		1	
36	993 424 299 00	clamp		1	

- -- E N D -- -

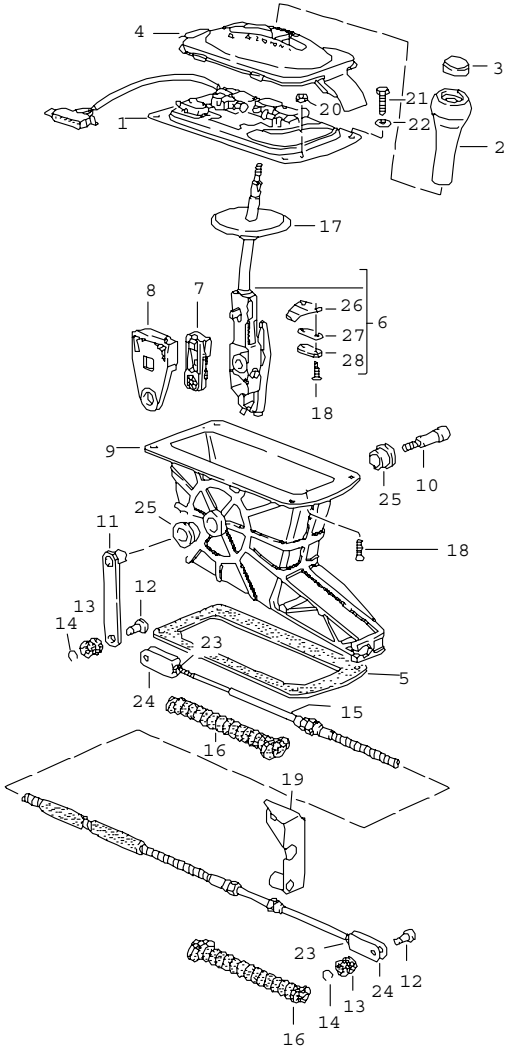

Pos	Part Number	Name	Remarks	Qty	Model
		selector lever TIPTRONIC	-91		
1	964 613 023 04	switch	-90	1	
1	964 613 023 04	switch	91	1	
2	943 426 069 01	selector knob		1	
	1AJ	black	90		
	2LX	mahogany	90		
	H05	marine blue	90		
	7LD	burgundy	90		
	7VX	linen	90		
	2WH	cashmere beige	90		
	8YR	black	91		
	6XL	classic grey	91		
	9YL	cobalt blue	91		
	6YL	magenta	91		
	4YU	cashmere beige	91		
	8ZL	light grey	91		
	L15	scala red	91		
	A45	greenwich grey	91		
	M05	matador red	91		
	D35	carrara grey	91		
	J25	sherwood green	91		
3	943 426 275 05	adjusting lever		1	
	01C	satin black			
4	964 552 169 00	shift gate		1	
	01C	satin black			
5	943 426 129 00	gasket		1	
6	943 426 051 00	selector lever		1	
7	A 943 426 043 01	driver see technical information GR.3 NR.2/96		1	

Pos	Part Number	Name	Remarks	Qty	Model	Pos	Part Number	Name	Remarks	Qty	Model
8	943 426 141 03	guide		1							
9	943 426 131 04	housing		1							
10	943 426 168 00	fastening screw		1							
11	943 426 066 01	reverse lever		1							
12	943 426 149 00	bolt		2							
13	943 426 261 00	rubber mounting		2							
14	N 012 436 2	lock washer		2							
15	943 426 033 02	cable		1							
16	943 426 103 00	bellows		2							
17	999 704 159 40	washer		1							
18	900 249 026 02	countersunk-head screw		2							
19	943 426 021 02	support		1							
20	N 011 004 6	hexagon nut		2							
21	900 075 057 02	hexagon-head bolt M 6 X 16		4							
22	N 011 524 7	washer A 6,4		4							
23	N 011 005 14	hexagon nut M 5		2							
24	943 426 047 00	clevis		2							
25	900 288 002 10	bush		2							
26	943 426 307 01	spring		2							
27	943 426 309 01	plate		1							
28	943 426 306 01	adjusting shim 0,4 MM		X							
28	943 426 306 02	adjusting shim 0,8 MM		X							
		- -- E N D -- -									

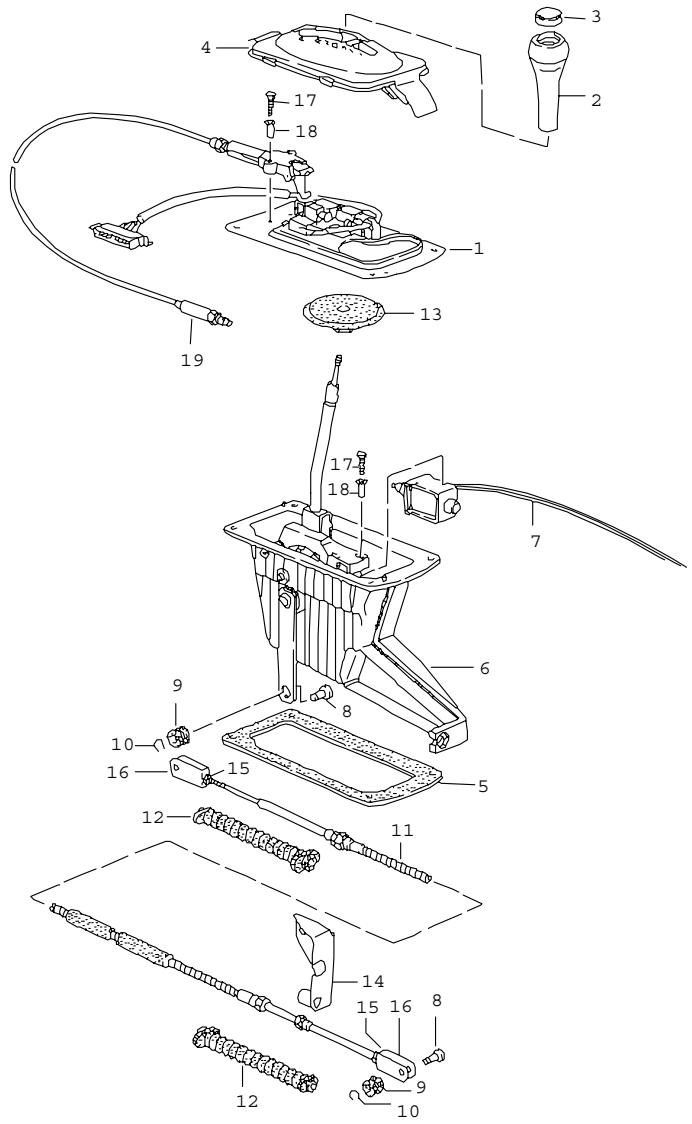

Pos	Part Number	Name	Remarks	Qty	Model
		selector lever TIPTRONIC	92-		
1	964 613 023 05	switch		1	
2	943 426 069 01	selector knob		1	
	8YR	black			
	6XL	classic grey			
	9YL	cobalt blue			
	6YL	magenta			
	4YU	cashmere beige			
	8ZL	light grey			
	L15	scala red			
	A45	greenwich grey			
	M05	matador red			
	D35	carrara grey			
	J25	sherwood green			
3	943 426 275 05	adjusting lever		1	
	01C	black			
4	964 552 169 00	shift gate		1	
	01C	black			
5	943 426 129 03	gasket		1	
6	943 426 011 05	selector lever with housing	93-	1	
6	943 426 011 06	selector lever with housing	-92	1	
7	928 624 170 00	solenoid		1	
8	943 426 149 00	bolt		2	
9	943 426 261 00	rubber mounting		2	
10	N 012 436 2	lock washer		2	
11	943 426 033 02	cable		1	

Pos	Part Number	Name	Remarks	Qty	Model
12	943 426 103 00	bellows		2	
13	999 704 159 40	washer		1	
14	943 426 021 02	support		1	
15	N 011 005 14	hexagon nut M 5		2	
16	943 426 047 00	clevis		2	
17	900 075 164 02	hexagon-head bolt		4	
18	900 121 033 01	tubular rivet		4	
19	943 426 073 01	cable	-92	1	
19	943 426 073 01	cable	93-	1	
		- -- E N D -- -			

Pos	Part Number	Name	Remarks	Qty	Model

Model	Year	MG	SG	Illustration	Restrictions	Update				
964	94	7	01	701-05		194	17:54	24.11.2005	PORSCHE	PET	PORSCHE

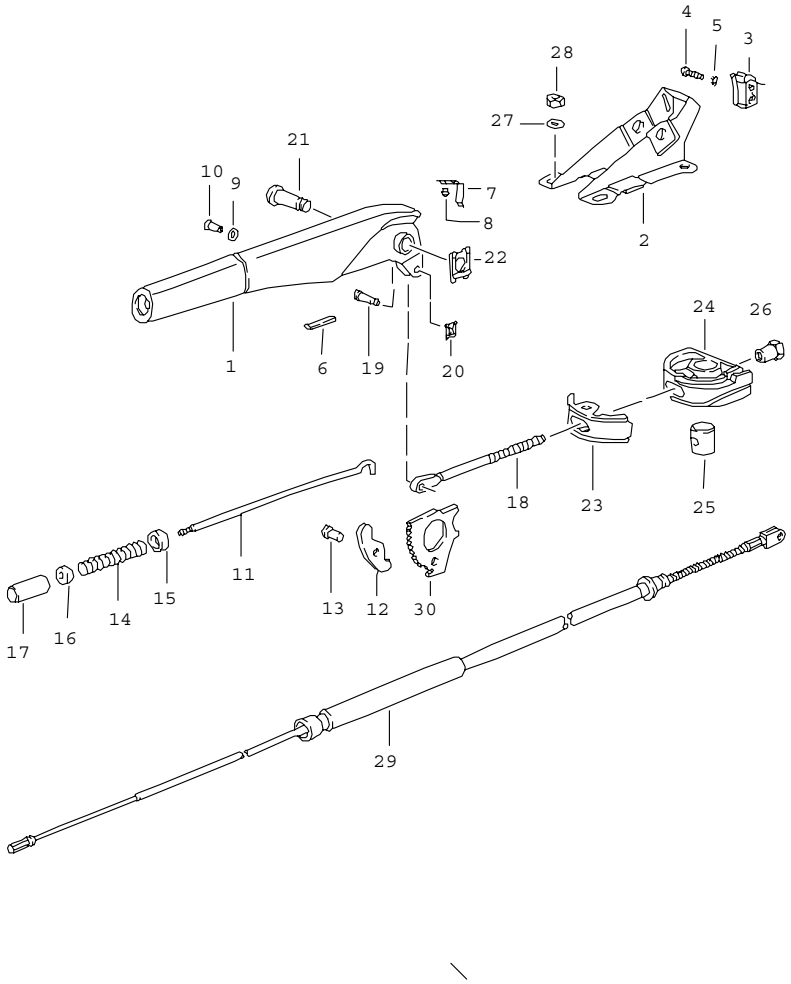

Pos	Part Number	Name	Remarks	Qty	Model
		handbrake actuator			
1	964 424 051 01	parking-brake lever		1	
	1AJ	black	-90		
	2LX	mahogany			
	7JX	marine blue			
	7LD	burgundy			
	7VX	linen			
	2WH	cashmere beige	-90		
	4MT	velvet red	-90		
	2WT	slate grey	-90		
	4UC	caramel	-90		
	7KC	venetian blue	-90		
	5VT	silk grey	-90		
	8YR	black	91-		
	6XL	classic grey	91-		
	9YL	cobalt blue	91-		
	6YL	magenta	91-		
	4YU	cashmere beige	91-		
	8ZL	light grey	91-		
	M05	matador red	91-		
	D35	carrara grey	91-		
	J25	sherwood green	91-		
	ARB	guards red			SPEEDSTER
	ARE	pearl grey			SPEEDSTER
	ARS	maritime blue			SPEEDSTER
	ARH	speed yellow			SPEEDSTER
2	964 424 060 00	bearing bracket		1	
3	901 613 521 20	contact piece		1	

Pos	Part Number	Name	Remarks	Qty	Model
4	900 015 025 02	oval-head screw AM 4 X 15		1	
5	900 115 005 02	washer A 4,3		1	
6	901 424 509 01	stop		1	
7	964 424 533 00	contact spring		1	
8	900 055 001 20	rivet		2	
9	900 031 012 10	washer 2,8		2	
10	900 206 003 00	tubular rivet 5 X 0,5 X 10		1	
11	901 424 567 03	push rod		1	
12	901 424 508 00	pawl		1	
13	901 424 511 00	bolt		1	
14	901 424 543 00	compression spring		1	
15	914 424 258 00	guide sleeve		1	
16	901 424 593 01	rubber ring		1	
17	964 424 523 00	push button		1	
18	964 424 567 00	pull rod		1	
19	999 166 010 02	bolt A6 X 16 X 13		1	
20	N 012 645 2	lock		1	
21	959 424 519 00	pin		1	
22	N 012 653 1	lock		1	
23	964 424 570 00	lock		1	
24	964 424 568 00	compensating piece		1	
25	999 230 333 02	nipple		1	
26	964 424 569 00	adjusting nut		1	
27	900 025 007 02	washer A 8,4		4	
29	964 424 551 02	parking-brake cable	-91	2	CARRERA 2/4
29	964 424 551 02	parking-brake cable	92-	2	CARRERA 2/4 CARRERA RS
29	965 424 551 01	parking-brake cable	91	2	TURBO
29	965 424 551 01	parking-brake cable	92-	2	TURBO
30	914 424 541 00	locking segment		1	

- -- E N D -- -

Model	Year	MG	SG	Illustration	Restrictions	Update	17:54	24.11.2005	PORSCHE PET PORSCHE
964	94	7	02	702-00		194			

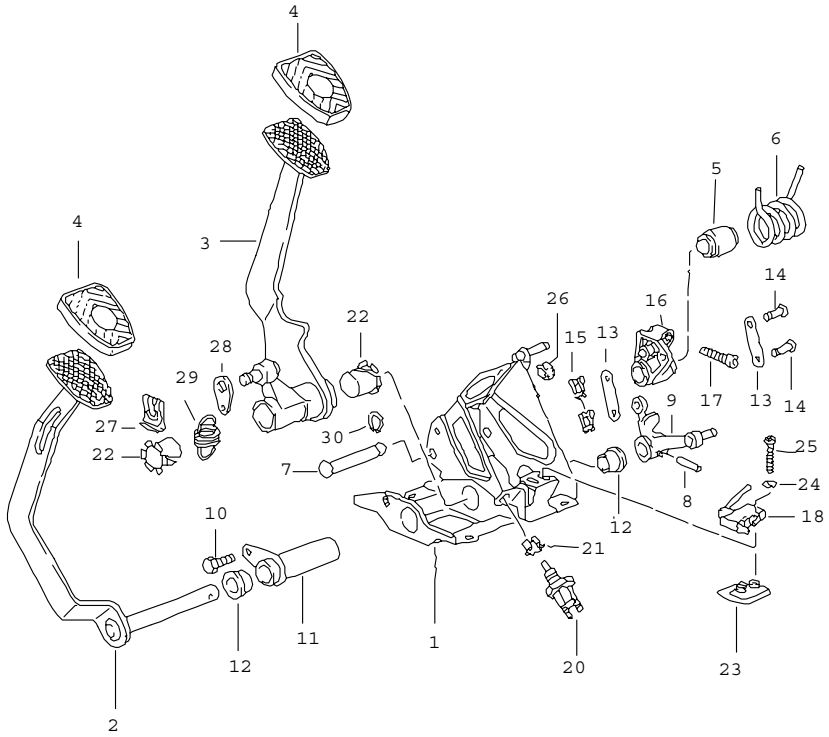

Pos	Part Number	Name	Remarks	Qty	Model
		pedals manual transmission			CARRERA TURBO
1	964 423 065 04	bearing bracket	/LL -90	1	
1	964 423 065 04	bearing bracket	/LL 91-	1	
(1)	964 423 066 02	bearing bracket	/RL -90	1	
(1)	964 423 066 02	bearing bracket	/RL 91	1	CARRERA 2/4
(1)	965 423 066 00	bearing bracket	/RL /RL 92-	1 1	TURBO CARRERA
2	964 423 067 02	clutch pedal	/LL -91	1	
2	965 423 067 00	clutch pedal	/LL /LL 92-	1 1	TURBO CARRERA
(2)	964 423 078 00	clutch pedal	/RL -90	1	
(2)	964 423 078 01	clutch pedal	/RL 91	1	
(2)	965 423 068 00	clutch pedal	/RL /RL 92-	1 1	TURBO CARRERA
3	964 423 051 01	brake pedal	/LL	1	
(3)	964 423 052 01	brake pedal	/RL -90	1	
(3)	964 423 052 02	brake pedal	/RL 91-	1	
-	964 355 287 05	push rod		1	
-	964 355 321 03	securing clip for push rod		1	
4	914 423 210 00	rubber pad	/LL	2	
4	964 423 210 00	rubber pad	/RL 90	2	
4	964 423 210 01	rubber pad	/RL 91-	2	
5	964 423 543 01	bearing sleeve	-90	1	
5	964 423 543 01	bearing sleeve	91-	1	
6	964 423 551 02	clutch power spring	-91	1	CARRERA
6	964 423 551 02	clutch power spring	92-	1	CARRERA
6	965 423 551 02	clutch power spring		1	TURBO
7	964 423 565 00	shaft	-93	1	
7	993 423 565 00	shaft	94-	1	

Pos	Part Number	Name	Remarks	Qty	Model
-	900 041 005 01	circlip 12 X 1	94-	2	
8	N 023 351 1	roll pin		1	
9	965 423 519 00	lever		1	CARRERA
9	965 423 519 00	lever		1	TURBO
10	N 010 210 7	hexagon-head bolt M 6 X 10		1	
11	964 423 069 00	bearing tube	/LL -91	1	CARRERA
(11)	965 423 069 00	bearing tube	/LL /LL 92-	1 1	TURBO CARRERA
(11)	964 423 060 00	bearing tube	/RL -91	1	CARRERA
(11)	965 423 060 00	bearing tube	/RL 92-	1 1	TURBO CARRERA
12	964 423 611 00	bush	/LL -91	2	CARRERA
(12)	999 924 081 00	bush	/LL /LL 92-	2	TURBO CARRERA
(12)	964 423 611 00	bush	/RL -91	1	CARRERA
(12)	999 924 080 00	bush	/RL /RL 92-	1	TURBO CARRERA
13	911 423 567 00	intermediate piece		2	
14	959 423 569 01	bolt		1	
15	N 012 645 2	lock		2	
16	964 423 453 01	lever	89	1	
16	964 423 453 01	lever	-91	1	CARRERA
16	965 423 143 00	lever	92-	1 1	TURBO CARRERA
17	N 044 701 1	pan-head screw M 5X22	-91	1	CARRERA
17	900 067 148 02	pan-head screw M 5X25	92-	1 1	TURBO CARRERA
18	964 613 415 00	microswitch		1	
19	900 025 001 02	washer		2	
20	964 613 301 00	stop light switch		1	
21	431 721 283 B	retaining clip	-90	1	
(21)	999 076 044 40	hexagon nut	91-	1	
22	999 924 014 40	bush		2	
23	964 423 613 00	threaded plate		1	
24	900 025 001 02	washer		2	
25	N 044 134 2	oval-head screw		2	
26	901 423 193 00	rubber stop		1	
27	999 166 077 02	safety clip		1	
28	964 355 178 01	support	/LL	1	
(28)	964 355 170 00	support	/RL	1	
29	964 355 325 03	spring	/LL	1	
(29)	964 355 328 02	spring	/RL	1	
30	900 041 005 01	circlip 12 X 1		2	

- -- E N D -- -

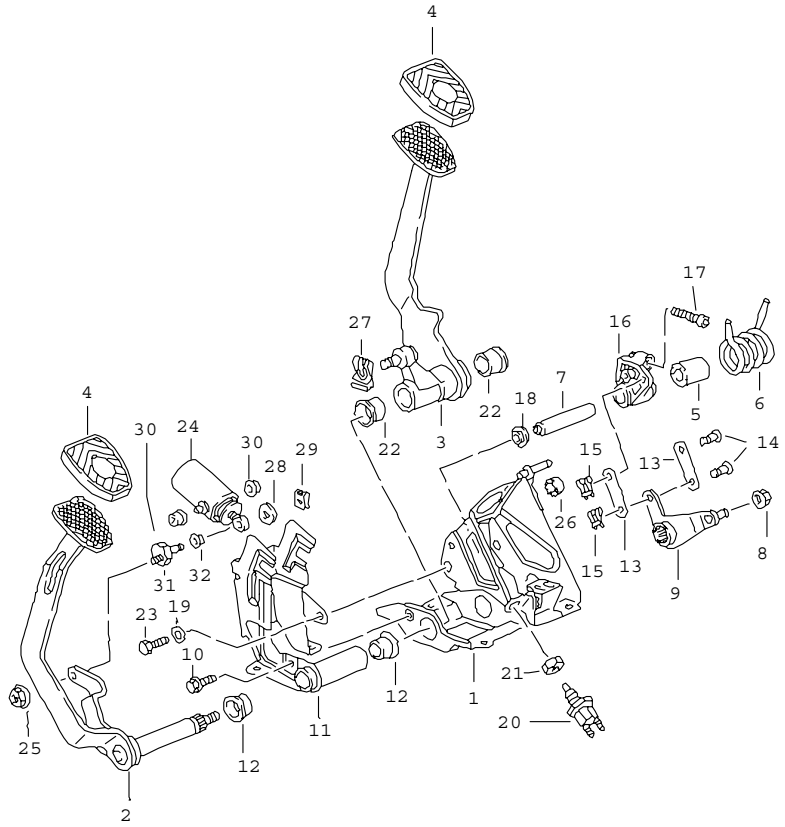

Pos	Part Number	Name	Remarks	Qty	Model
		pedals manual transmission			TURBO 3,6
1	965 423 065 00	bearing bracket	/LL	1	
1	965 423 066 01	bearing bracket	/RL	1	
2	965 423 073 52	clutch pedal	/LL	1	
2	965 423 078 02	clutch pedal	/RL	1	
-	965 423 325 00	lever for clutch power spring	/RL	1	
3	964 423 150 01	brake pedal	/LL	1	
3	965 423 187 00	brake pedal	/RL	1	
-	965 423 163 01	bearing tube for brake pedal	/RL	1	
-	964 355 287 05	push rod		1	
-	964 355 321 03	securing clip for push rod		1	
4	914 423 210 00	rubber pad	/LL	2	
4	964 423 210 01	rubber pad	/RL	2	
5	965 423 543 00	bearing sleeve	/LL	1	
5	964 423 543 01	bearing sleeve	/RL	1	
6	965 423 551 50	clutch power spring		1	
7	965 423 565 00	shaft	/LL	1	
7	964 423 565 00	shaft	/RL	1	
-	N 044 134 2	circlip	/RL	2	
8	900 380 007 09	hexagon nut VM 10	/LL	1	
(8)	N 020 351 1	roll pin 6 X 28	/RL	1	
9	965 423 519 52	lever		1	
10	900 075 291 02	hexagon-head bolt M 6 X 16		1	
11	965 423 075 01	bracket	/LL	1	

Pos	Part Number	Name	Remarks	Qty	Model
12	999 924 098 00	bush	/LL	2	
12	999 924 098 00	bush outer	/RL	1	
12	999 924 080 00	bush inner	/RL	1	
13	911 423 567 00	intermediate piece		2	
14	959 423 569 01	bolt		2	
15	N 012 645 2	lock		2	
16	965 423 143 00	lever		1	
17	N 044 734 1	pan-head screw M 5 X16		1	
18	965 423 563 00	washer		1	
19	999 025 163 02	washer 6,4 X 15 X2,5		1	
20	964 613 301 00	stop light switch		1	
21	999 076 044 40	hexagon nut M 12 X 1,5		1	
22	999 924 014 40	bush		1	
23	900 075 291 02	hexagon-head bolt M 6 X 16		1	
24	965 423 130 00	clutch power spring		1	
25	900 076 025 02	hexagon nut M 8		1	
26	901 423 193 00	rubber stop		1	
27	999 166 027 02	safety clip SLB 12		1	
28	900 089 006 02	washer A 8		1	
29	999 166 075 02	safety clip SLB 8		1	
30	928 423 581 00	bush		2	
31	965 423 555 01	eccentric bolt		1	
32	999 924 001 40	bush		1	
		- -- E N D -- -			

Model	Year	MG	SG	Illustration	Restrictions	Update	17:55	24.11.2005	PORSCHE PET PORSCHE
964	94	7	02	702-05		194			

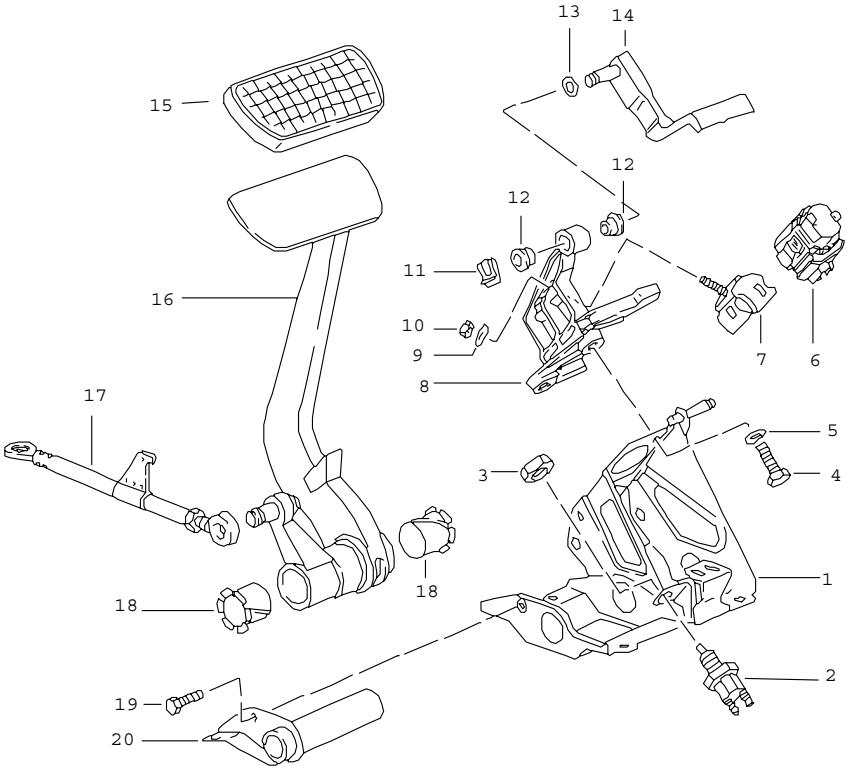

Pos	Part Number	Name	Remarks	Qty	Model
		pedals TIPTRONIC			
1	964 423 065 04	bearing bracket	/LL -90	1	
1	964 423 065 04	bearing bracket	/LL 91-	1	
(1)	964 423 066 02	bearing bracket	/RL -90	1	
(1)	964 423 066 02	bearing bracket	/RL 91-	1	
2	964 613 301 00	stop light switch		1	
3	431 721 283 B	retaining clip		1	
4	900 075 087 02	hexagon-head bolt M 8 X 16		2	
5	900 025 007 02	washer		2	
6	964 613 211 00	kickdown switch		1	
7	964 423 243 01	support	/LL	1	
7	964 423 244 00	support	/RL	1	
8	964 423 241 03	bracket	/LL	1	
(8)	964 423 242 01	bracket	/RL	1	
9	900 151 006 09	washer		1	
10	900 910 010 09	lock nut		1	
11	999 166 075 02	safety clip		1	
12	999 924 069 00	bearing sleeve		2	
13	900 089 006 02	washer		1	
14	964 423 245 01	lever	/LL	1	
(14)	964 423 238 00	lever	/RL	1	
15	964 423 583 00	rubber pad		1	
16	964 423 053 01	brake pedal	/LL	1	
16	964 423 054 02	brake pedal	/RL	1	
17	964 355 287 05	push rod		1	
-	964 355 321 03	securing clip for push rod		1	
18	999 924 014 40	bush		2	

Pos	Part Number	Name	Remarks	Qty	Model	Pos	Part Number	Name	Remarks	Qty	Model
19	999 072 005 09	hexagon-head bolt M 6 X 12		1							
20	964 423 162 01	bearing tube	/LL	1							
20	964 423 163 00	bearing tube	/RL	1							
		- -- E N D -- -									

Model	Year	MG	SG	Illustration	Restrictions	Update				
964	94	7	02	702-08		194	17:55	24.11.2005	PORSCHE	PET	PORSCHE

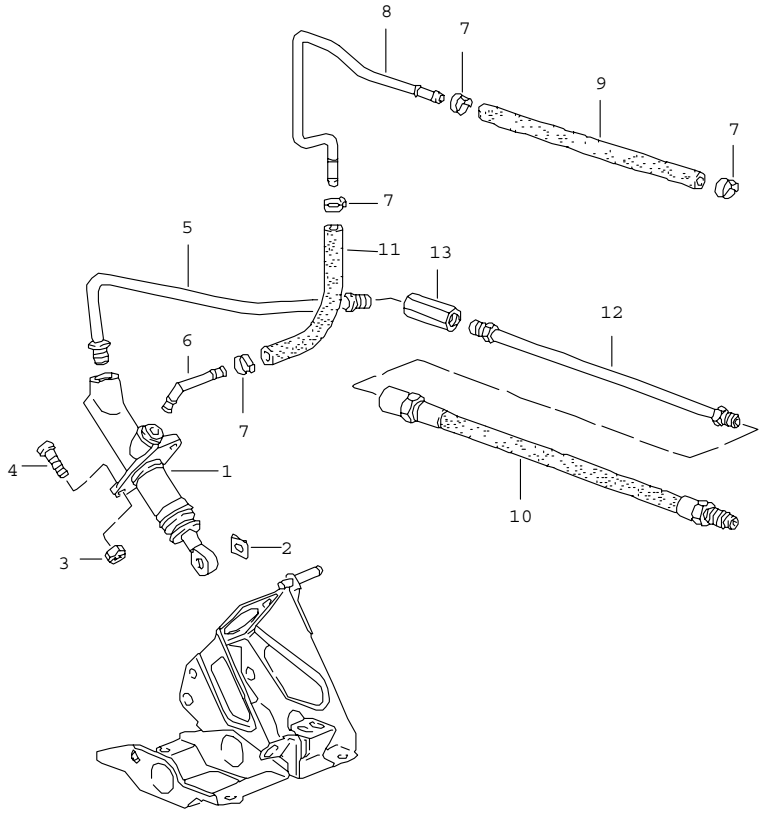

Pos	Part Number	Name	Remarks	Qty	Model
		clutch control clutch master cylinder			
1	993 423 171 00	clutch master cylinder		1	CARRERA 2/4
1	993 423 171 00	clutch master cylinder	-92	1	TURBO
1	965 423 149 00	clutch master cylinder	93-	1	TURBO 3,6
-	965 423 217 01	intermediate piece	93-	1	TURBO 3,6
-	N 011 118 11	hexagon nut BM 8	93-	2	TURBO 3,6
2	N 900 470 01	lock washer		1	
3	900 910 003 02	lock nut		2	
4	900 075 087 02	hexagon-head bolt		2	
5	964 423 107 00	clutch pipeline	/LL	1	
5	964 423 108 00	clutch pipeline	/RL	1	
6	964 423 757 00	elbow		1	
7	999 512 445 00	clamp		7	
8	964 423 137 02	clutch pipeline	/LL	1	
8	964 423 138 01	clutch pipeline	/RL	1	
9	999 181 021 50	hose 7,5 X 12,5		1	
10	964 423 477 00	clutch hose		1	
11	999 181 021 50	hose 7,5 X 12,5 X 270		1	
12	964 423 109 01	clutch pipeline	/LL	1	
12	964 423 110 00	clutch pipeline	/RL	1	
13	477 209 161	connecting piece		2	
-	964 423 114 00	clutch pipeline	/RL	1	
		- -- E N D -- -			

Model	Year	MG	SG	Illustration	Restrictions	Update	17:55	24.11.2005	PORSCHE PET PORSCHE
964	94	7	02	702-10		194			

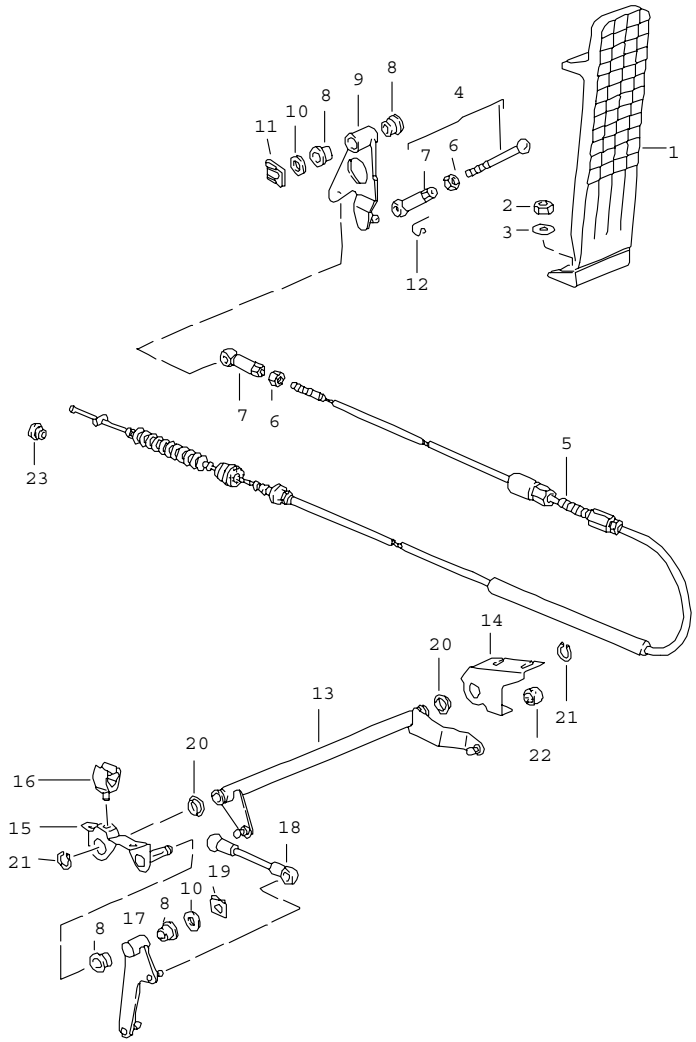

Pos	Part Number	Name	Remarks	Qty	Model
		pedals accelerator control			
1	964 423 111 00	accelerator pedal		1	
2	900 910 010 09	lock nut		2	
3	N 011 666 7	washer B 6,4		2	
4	964 423 027 00	push rod	/LL	1	
4	964 423 027 20	push rod	/LL	1	M 249
(4)	964 423 028 02	push rod	/RL	1	
4	964 423 028 02	push rod	/RL 90-	1	
5	964 423 023 04	accelerator cable	/LL -92	1	
(5)	964 423 023 04	accelerator cable	/LL 93-	1	
5	964 423 023 23	accelerator cable	/LL -92	1	M 249
(5)	964 423 023 23	accelerator cable	/LL 93-	1	M 249
5	964 423 024 03	accelerator cable	/RL -92	1	
(5)	964 423 024 03	accelerator cable	/RL 93-	1	
5	964 423 024 24	accelerator cable	/RL -92	1	M 249
(5)	964 423 024 24	accelerator cable	/RL 93-	1	M 249
5	965 423 023 03	accelerator cable	/LL -92 /LL -92	1 1	TURBO TURBO 3,6
(5)	965 423 023 03	accelerator cable	/LL 93- /LL 93-	1 1	TURBO TURBO 3,6
5	965 423 024 03	accelerator cable	/RL -92 /RL -92	1 1	TURBO TURBO 3,6
(5)	965 423 024 03	accelerator cable	/RL 93- /RL 93-	1 1	TURBO TURBO 3,6
6	900 034 006 02	hexagon nut		2	
7	N 015 521 3	ball socket		2	
8	901 423 253 00	bearing sleeve		2	
9	964 423 251 01	reverse lever	-91	1	
9	964 423 251 01	reverse lever	92-	1	
10	900 089 006 02	washer		3	

Pos	Part Number	Name	Remarks	Qty	Model	Pos	Part Number	Name	Remarks	Qty	Model
11	999 166 075 02	safety clip		1							
12	900 169 014 02	securing clip		2							
13	964 423 521 00	shaft	/RL	1							
14	964 423 514 00	bracket	/RL	1							
15	964 423 511 00	bracket	/RL	1							
16	944 347 467 00	cable clip	/RL	1							
17	964 423 252 00	reverse lever	/RL	1							
18	964 423 254 00	push rod	/RL	1							
19	999 166 075 02	safety clip	/RL	1							
20	999 924 006 40	bearing sleeve	/RL	2							
21	900 041 005 01	circlip	/RL	2							
22	901 423 193 00	rubber stop	/RL	1							
23	964 423 435 00	clip		1							
		- -- E N D -- -									

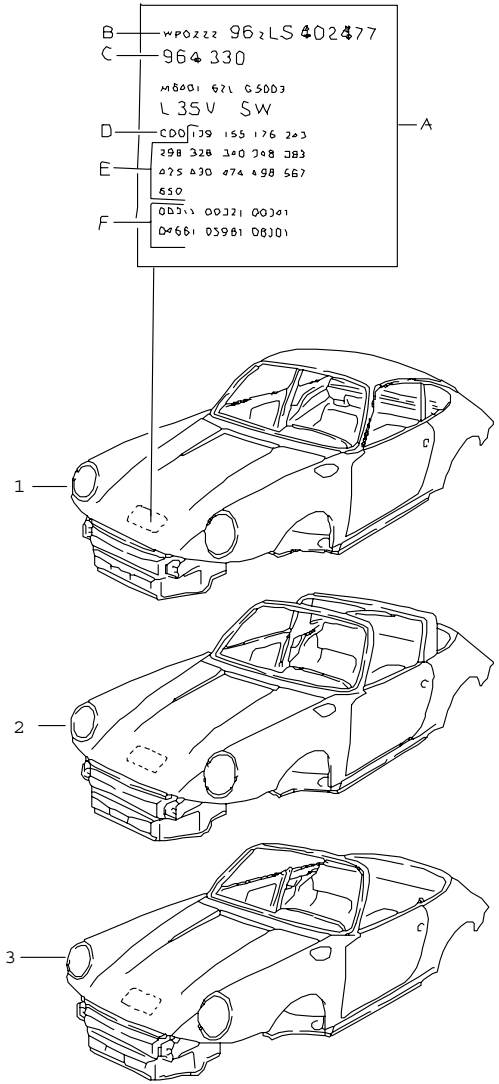

Pos	Part Number	Name	Remarks	Qty	Model
		body in white			
		prime coated sealed with underbody protection			
		bodyshells can only be delivered of the current model year			
		see tpi GR.8 NR.35			
		the data (b-f) that you need for your order please find in the data vehicle data bank please indicate this data in your order			
A	-	data bank of the car			
B	-	vehicle identification no.			
C	-	order type			
D	-	country equipment			
E	-	optional extras			
F	-	additional applications			
1	964 500 900 00	body in white		1	COUPE CARRERA 2/4
1	964 500 900 01	body in white see workshop manual CARRERA 2 body GR.50/51/53		1	COUPE CARRERA RS
(1)	965 500 900 00	body in white		1	COUPE TURBO
2	964 500 900 40	body in white		1	TARGA
3	964 500 900 60	body in white		1	CABRIO
(3)	964 500 900 61	body in white		1	SPEEDSTER
(3)	964 500 900 65	body in white		1	CABRIO TURBO-LOOK
		- -- E N D -- -			

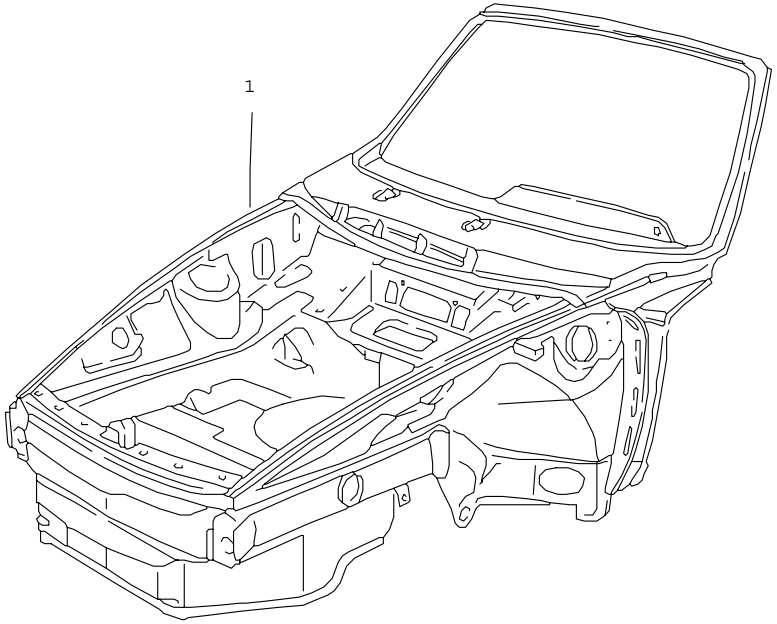

Pos	Part Number	Name	Remarks	Qty	Model
		body front section			
1	964 599 011 14	body front section for cars with airbag	/LL	1	
1	964 599 011 12	body front section	/LL	1	CARRERA RS
1	964 599 011 16	body front section	/LL	1	C.2/4/ C.RS: M 002/ TURBO/ TURBO-LOOK
(1)	964 599 012 08	body front section	/RL	1	CARRERA RS
(1)	964 599 012 10	body front section	/RL	1	C.2/4/ C.RS: M 002/ TURBO/ TURBO-LOOK
	GRV	prime coated for cars without airbag			
(1)	964 599 011 17	body front section	/LL	1	SPEEDSTER
	GRV	prime coated for cars without airbag			
(1)	964 599 011 18	body front section	/LL	1	SPEEDSTER
	GRV	prime coated for cars with airbag			
(1)	964 599 012 15	body front section	/RL	1	SPEEDSTER
	GRV	prime coated			
		- -- E N D -- -			

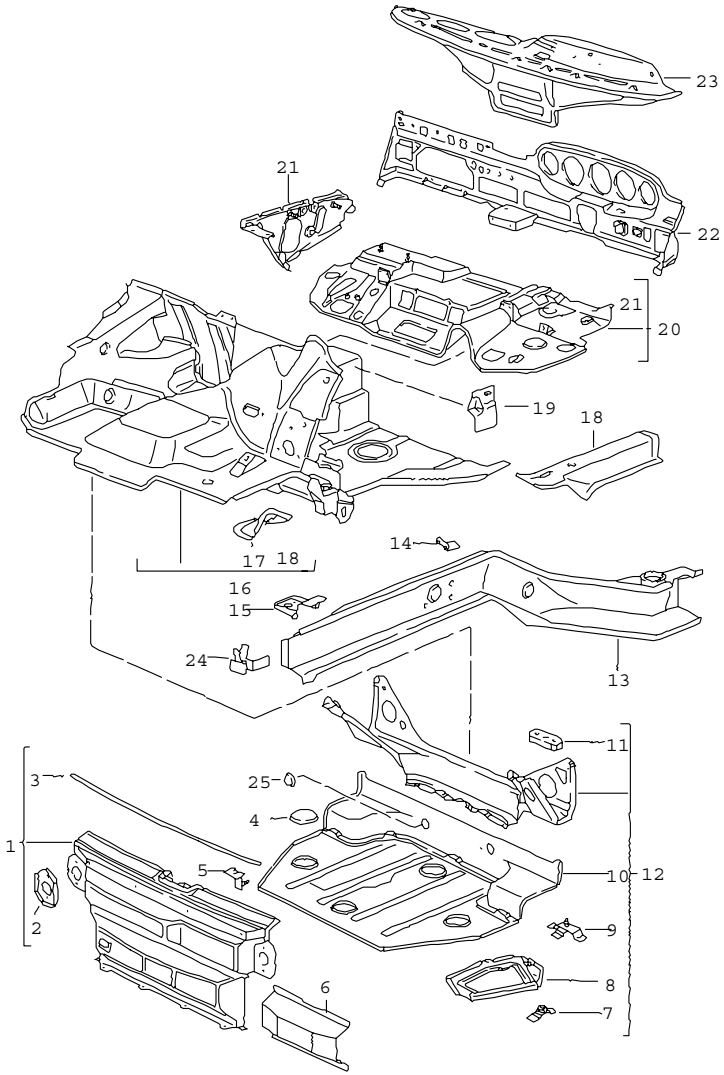

Pos	Part Number	Name	Remarks	Qty	Model
		frame front			
(1)	964 501 033 07	end plate	-91	1	
(1)	964 501 033 07	end plate		1	CARRERA RS
1	964 501 033 06	end plate	92-	1	
	GRV	prime coated			
(2)	964 501 117 00	reinforcement	/L	1	
2	964 501 118 00	reinforcement	/R	1	
3	911 501 395 00	sealing rail		1	
4	964 504 209 00	cover		2	
(4)	964 504 213 00	cover for spare-wheel well		2	
5	964 501 187 00	support for cover power-steering pump		1	CARRERA RS
6	964 501 807 00	reinforcement for terminal piece		1	CARRERA RS
7	964 501 383 01	mounting for emergency wheel		1	
8	964 501 285 01	carrier plate for battery		1	
9	964 501 289 00	support for hydraulic unit		1	
10	964 501 505 00	spare-wheel well		1	
11	964 501 133 00	threaded plate		2	
12	964 841 055 00	spare-wheel well complete with cross member		1	
13	964 501 015 03	side member	/L	1	
(13)	964 501 016 02	side member	/R	1	
14	964 501 735 00	support		1	CARRERA RS

Pos	Part Number	Name	Remarks	Qty	Model
15	964 501 733 00	bracket for battery main switch		1	CARRERA RS
-	964 501 514 00	bracket	/LL/R	1	
	GRV	prime coated			
-	964 501 513 00	bracket	/RL/L	1	
	GRV	prime coated			
16	964 501 053 00	intermediate piece	/LL	1	
(16)	964 501 054 00	floor	/RL -90	1	
(16)	964 501 054 02	floor	/RL 91-	1	
	GRV	prime coated			
17	964 501 519 00	gusset plate	/LL	1	
(17)	964 501 520 00	gusset plate	/RL	1	
18	964 501 603 00	extension	/L	1	
(18)	964 501 604 00	extension seat rail support	/R	1	
19	964 501 425 00	bracket for cars with airbag		1	
20	964 502 023 01	cross panel for cars with airbag	/LL -92	1	
(20)	964 502 023 02	cross panel	/LL -92	1	
(20)	964 502 024 02	cross panel	/RL -92	1	
21	A 964 501 081 00	bracket	/LL/L-92	1	
(21)	964 501 081 01	bracket	/RL/L-92	1	
(21)	A 964 501 082 00	bracket	/LL/R-92	1	
(21)	A 964 501 082 01	bracket	/RL/R-92	1	
(21)	965 501 081 02	bracket	/L 93-	1	
	GRV	prime coated			
(21)	965 501 082 01	bracket	/R 93-	1	
	GRV	prime coated			
(21)	964 501 081 04	bracket	/L	1	SPEEDSTER
	GRV	prime coated			
(21)	964 501 082 04	bracket	/R	1	SPEEDSTER
	GRV	prime coated			
22	964 502 027 00	dashboard	/LL	1	
(22)	964 502 027 01	dashboard lower part for cars with airbag	/LL	1	
(22)	964 502 028 00	dashboard lower part	/RL	1	
23	964 502 025 00	dashboard upper part	/LL	1	COUPE/TARGA/ CABRIO
(23)	964 502 026 00	dashboard upper part	/RL	1	COUPE/TARGA/ CABRIO
(23)	964 502 025 01	dashboard	/LL	1	SPEEDSTER
	GRV	prime coated			
(23)	964 502 026 01	dashboard	/RL	1	SPEEDSTER
	GRV	prime coated upper part			
24	964 501 673 00	support		2	
	GRV	prime coated			
25	999 703 066 50	plug		1	
		- -- E N D -- -			

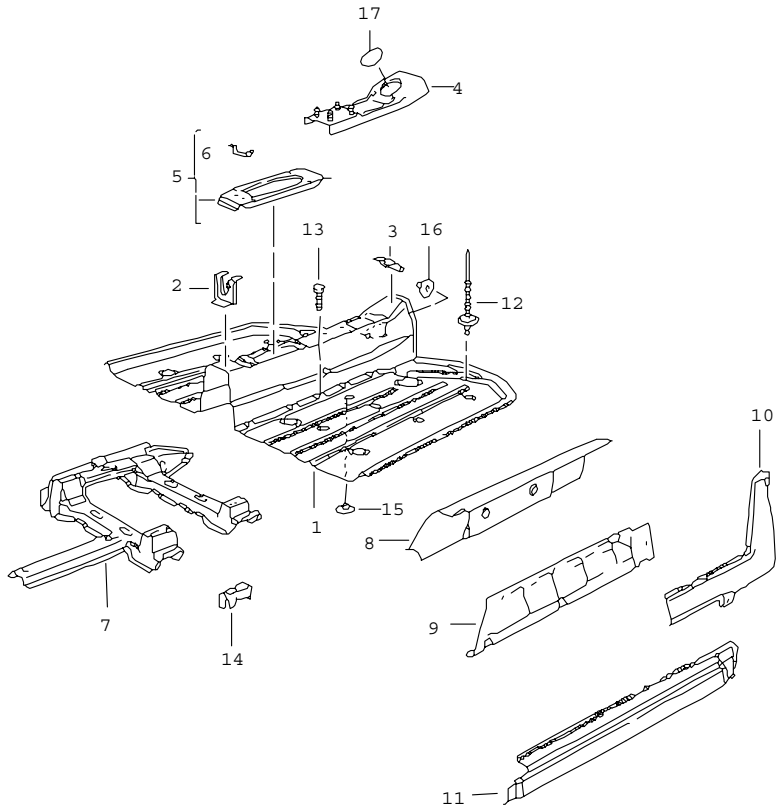

Pos	Part Number	Name	Remarks	Qty	Model
		frame centre			
1	A 964 501 501 02	floor		1	
	GRV	prime coated			
1	993 501 501 00	floor		1	
	GRV	prime coated			
2	964 501 433 00	support for centre console	/V	1	
3	964 501 430 00	support for centre console	/H	1	
4	964 501 509 01	reinforcement for parking-brake lever		1	
5	964 501 059 01	bracket	-91	1	CARRERA 4
(5)	964 501 059 02	bracket for cars with TIPTRONIC it is necessary to rework	-91	1	CARRERA 2
(5)	964 501 059 06	bracket	92-	1	CARRERA 4
(5)	964 501 059 04	bracket for cars with TIPTRONIC it is necessary to rework	92-	1	CARRERA 2
6	964 501 432 00	support for centre console		1	
7	A 964 501 057 00	seat support	/L	1	
(7)	A 964 501 058 00	seat support	/R	1	
7	964 501 057 02	seat support	/L	1	
(7)	964 501 058 02	seat support	/R	1	
8	964 501 021 00	side member	/L -90	1	
(8)	964 501 022 00	side member	/R -90	1	
(8)	964 501 021 01	side member	/L 91-	1	
(8)	964 501 022 01	side member inner	/R 91-	1	

Pos	Part Number	Name	Remarks	Qty	Model
9	964 501 135 00	side member	/L	1	
	GRV	prime coated			
(9)	964 501 136 00	side member outer	/R	1	
	GRV	prime coated			
10	964 502 577 40	gusset plate	/L	1	
(10)	964 502 070 40	gusset plate	/R	1	
(11)	965 503 401 01	door sill	/L	1	
(11)	965 503 402 01	door sill	/R	1	
12	928 299 516 06	tubular rivet A 4,8 X 6,5 X 22		X	
13	999 503 094 00	weld screw M 6 X 12		10	
14	A 964 501 535 00	support		2	
14	964 501 535 01	compensating plate seat support		2	
15	N 011 412 2	nut		4	CARRERA RS
16	999 505 251 02	nut		2	CARRERA RS
17	964 504 465 02	cover	89	1	
17	964 504 465 02	cover	90-	1	M 339
		- -- E N D -- -			

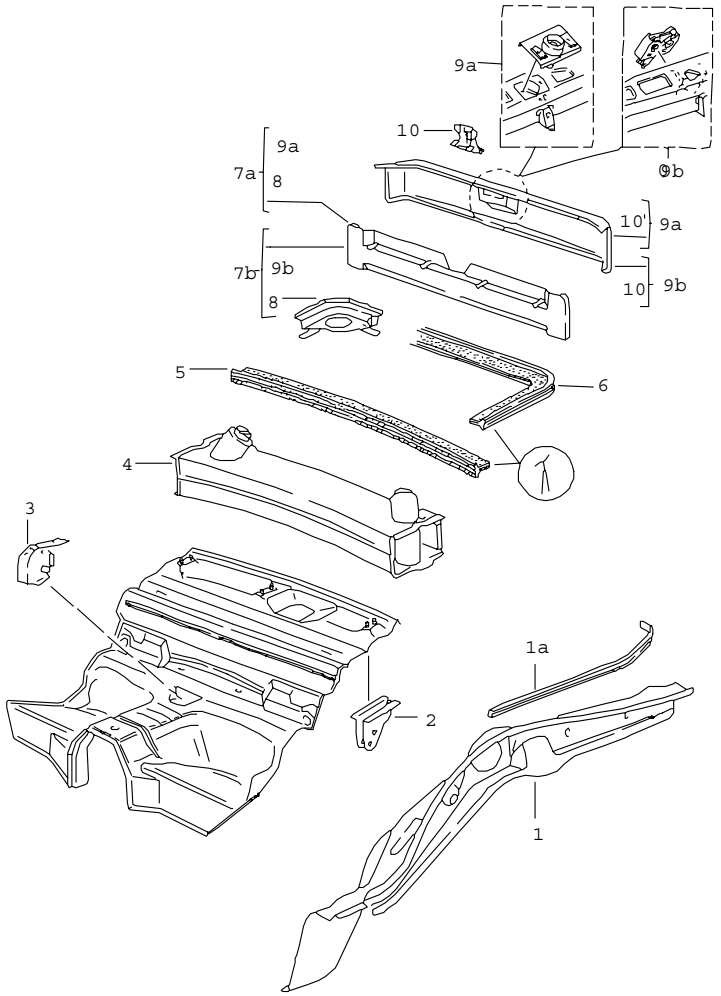

Pos	Part Number	Name	Remarks	Qty	Model
		frame rear			
1	964 501 025 01	side member	/L -90	1	
(1)	964 501 025 02	side member	/L 91-	1	
(1)	964 501 026 01	bracket	/R	1	
1A	964 501 793 00	rail	/L	1	
(1A)	964 501 794 00	rail for engine compartment seal	/R	1	
2	911 501 729 01	pneumatic spring mount		2	COUPE/TARGA/ CABRIO
(2)	964 501 757 00	pneumatic spring mount		2	SPEEDSTER
3	911 501 041 02	bearing		1	COUPE/TARGA
(3)	911 501 041 61	bearing for back seat backrest with pull-type release lower		1	CABRIO
(3)	964 501 041 00	bearing for back seat backrest with release button upper		1	
4	964 501 075 00	rear axle cross support F >>96MS4 01467 F >>96MS4 30299 F >>96MS4 50777		1	 COUPE TARGA CABRIO
(4)	964 501 075 02	rear axle cross support F 96MS4 01468>> F 96MS4 30300>> F 96MS4 50778>> F 96MS4 70061>> F 96NS4 90061>>		1	 COUPE TARGA CABRIO COUPE COUPE
5	911 504 115 02	engine compartment seal		1	
6	930 504 170 01	engine compartment seal		1	
7A	964 501 079 00	cross member		1	
7B	965 501 079 01	cross member complete		1	
(8)	964 501 045 00	engine mounting	/L	1	

Pos	Part Number	Name	Remarks	Qty	Model
8	964 501 046 00	engine mounting	/R	1	
9A	964 501 091 00	cross member		1	
9B	964 501 091 01	cross member outer		1	
10	964 501 717 00	mounting for covering		3	
-	999 703 347 40	cap for transport lock		2	
		- -- E N D -- -			

Pos	Part Number	Name	Remarks	Qty	Model

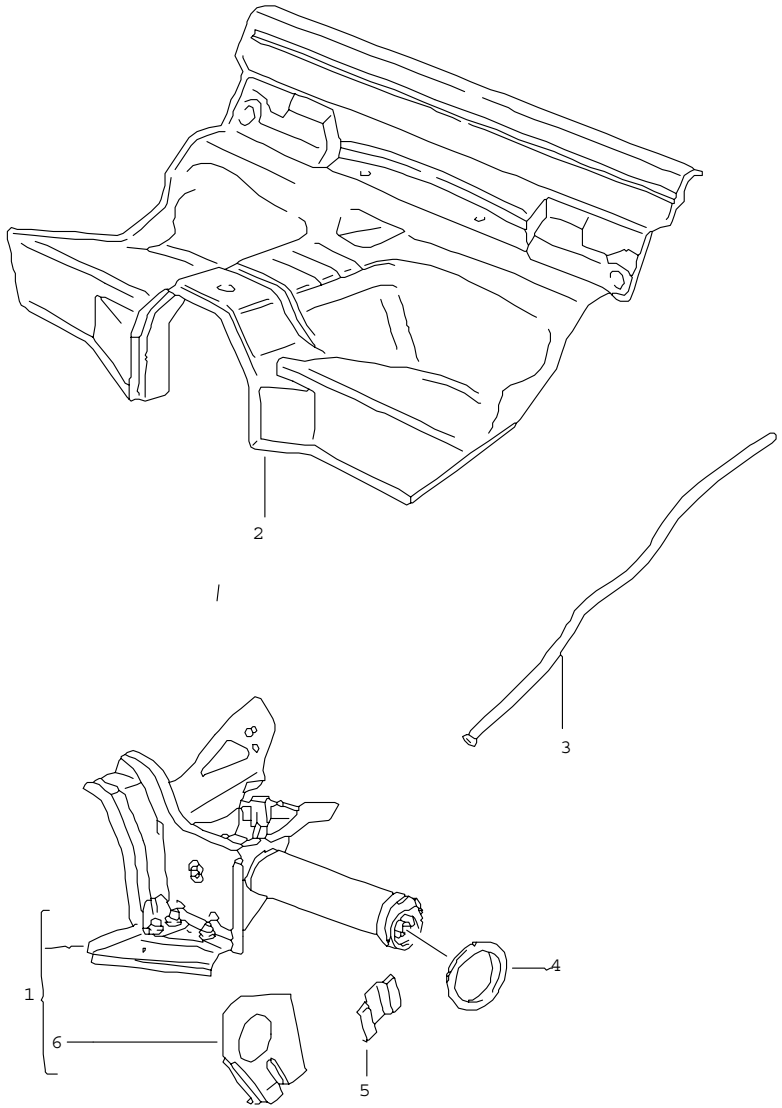

Pos	Part Number	Name	Remarks	Qty	Model
		rear-axle cross-tube			
1	964 501 965 00	rear-axle cross-tube	/L -92	1	
(1)	964 501 966 00	rear-axle cross-tube	/R -92	1	
1	965 501 965 00	rear-axle cross-tube	/L 93-	1	
	GRV	prime coated			
(1)	965 501 966 00	rear-axle cross-tube	/R 93-	1	
	GRV	prime coated with bracket			
2	964 501 049 02	seat well		1	COUPE/TARGA/ CABRIO
(2)	964 501 049 08	seat well		1	SPEEDSTER
3	964 501 691 00	guide tube	/L	1	
(3)	964 501 692 00	guide tube for parking-brake cable	/R	1	
4	964 503 351 00	reinforcement		2	
5	964 501 883 00	reinforcement for stabiliser mounting		2	CARRERA RS
6	964 501 183 00	bearing bracket	/L	1	
	GRV	prime coated			
(6)	964 501 184 00	bearing bracket	/R	1	
	GRV	prime coated			
		- -- E N D -- -			

Model	Year	MG	SG	Illustration	Restrictions	Update	17:57	24.11.2005	PORSCHE	PET	PORSCHE
964	94	8	01	801-20		194					

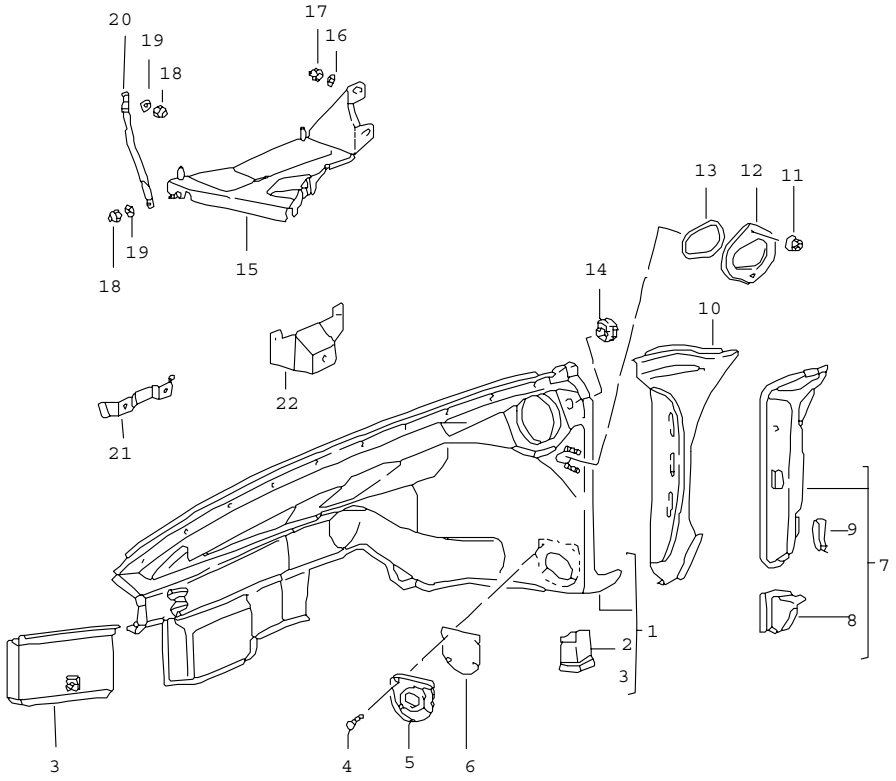

Pos	Part Number	Name	Remarks	Qty	Model
		interior panelling front			
1	A 964 501 035 00	wheel housing	/L	1	
(1)	A 964 501 036 01	wheel housing	/R	1	
1	965 501 035 02	wheel housing	/L	1	
	GRV	prime coated			
(1)	965 501 036 03	wheel housing	/R	1	
	GRV	prime coated			
2	964 501 297 00	jacking point	/L	1	
(2)	964 501 298 00	jacking point	/R	1	
3	964 501 125 00	gusset plate	/L	1	
(3)	964 501 126 00	gusset plate	/R	1	
(4)	900 143 143 02	tapping screw B 4,2 X 16		8	
5	964 504 251 01	cover		2	
6	964 504 725 00	gasket		2	
7	964 502 039 00	hinge pillar	/L	1	
(7)	964 502 040 00	hinge pillar	/R	1	
(7)	964 502 039 02	hinge pillar	/L	1	SPEEDSTER
	GRV	prime coated			
(7)	964 502 040 02	hinge pillar	/R	1	SPEEDSTER
	GRV	prime coated			
8	911 501 439 00	filler plate	/L	1	
(8)	911 501 440 00	filler plate	/R	1	
9	901 501 305 20	angular bracket	/L	1	
(9)	901 501 306 20	angular bracket	/R	1	
10	964 502 103 00	wing joining plate	/L	1	
(10)	964 502 104 00	wing joining plate	/R	1	
(10)	964 502 103 01	wing joining plate	/L	1	SPEEDSTER
	GRV	prime coated			

Pos	Part Number	Name	Remarks	Qty	Model
(10)	964 502 104 01	wing joining plate	/R	1	SPEEDSTER
	GRV	prime coated			
11	999 501 074 40	plastic nut		2	
12	964 572 565 00	cover for cars without air conditioner		1	
-	000 043 172 00	sealing cord roller with 10 meters $ 9 MM		*	
13	--- --- --- --	250 MM		1	
14	111 971 911 A	rubber sleeve		2	
(14)	999 703 348 40	rubber sleeve		2	M 650
15	A 993 504 138 00	bracket	/R	1	
15	993 504 138 00	bracket for oil cooler	/R	1	
16	900 151 008 02	washer B 8,4		3	
17	900 910 022 02	lock nut M 8		3	
18	900 910 010 09	lock nut M 6		2	
19	N 011 666 7	washer B 6,4		2	
20	993 504 139 00	strut		1	
21	993 501 457 00	support for anti-lock brake system control unit	/R	1	CARRERA RS
22	964 501 261 00	support for intensive windscr. washer	/R	1	CARRERA RS
		- -- E N D -- -			

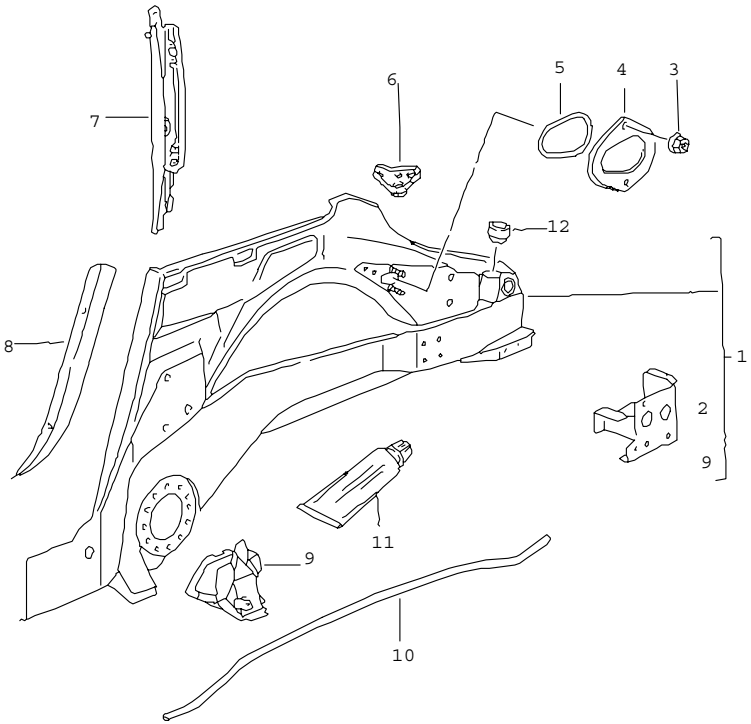

Pos	Part Number	Name	Remarks	Qty	Model
		interior panelling rear			COUPE
1	964 502 017 00	side section	/L 89	1	
(1)	964 502 018 00	side section	/R 89	1	
(1)	964 502 017 01	wheel housing	/L 90-92	1	C.2/4/ C.RS:M 002
(1)	964 502 018 01	wheel housing	/R 90-92	1	C.2/4/ C.RS:M 002
1	965 502 017 02	wheel housing	/L 93-	1	C.2/4/
	GRV	prime coated			C.RS:M 002
(1)	965 502 018 02	wheel housing	/R 93-	1	C.2/4/
	GRV	prime coated			C.RS:M 002
(1)	964 502 017 02	wheel housing	/L	1	CARRERA RS
(1)	964 502 018 02	wheel housing	/R	1	CARRERA RS
(1) A	965 502 017 01	wheel housing	/L	1	TURBO
(1) A	965 502 018 01	wheel housing	/R	1	TURBO
(1)	965 502 017 03	wheel housing	/L	1	TURBO
	GRV	prime coated			
(1)	965 502 018 03	wheel housing	/R	1	TURBO
	GRV	prime coated			
2	964 502 161 00	reinforcement	/L	1	
(2)	964 502 162 00	reinforcement	/R	1	
3	999 084 075 02	lock nut M 6		2	
4	964 572 565 00	cover for cars without air conditioner		1	
-	000 043 172 00	sealing cord roller with 10 meters $ 9 MM		*	
5	-	250 MM		1	
6	964 504 610 00	rubber sleeve for oil hose	/R	1	

Pos	Part Number	Name	Remarks	Qty	Model
7	964 502 071 01	inner panel	/L	1	
7	964 502 072 01	inner panel	/R	1	
8	964 502 771 00	profile	/L	1	
8	964 502 772 00	profile	/R	1	
9	964 502 085 00	bracket	/L	1	
	GRV	prime coated for jacking point			
(9)	964 502 086 00	bracket	/R	1	
	GRV	prime coated for jacking point			
10	964 502 283 01	guide tube for lid-release cable		1	
(11)	000 043 176 01	adhesive		1	
(12)	911 107 726 11	filler neck for oil tube		1	
		- -- E N D -- -			

Pos	Part Number	Name	Remarks	Qty	Model

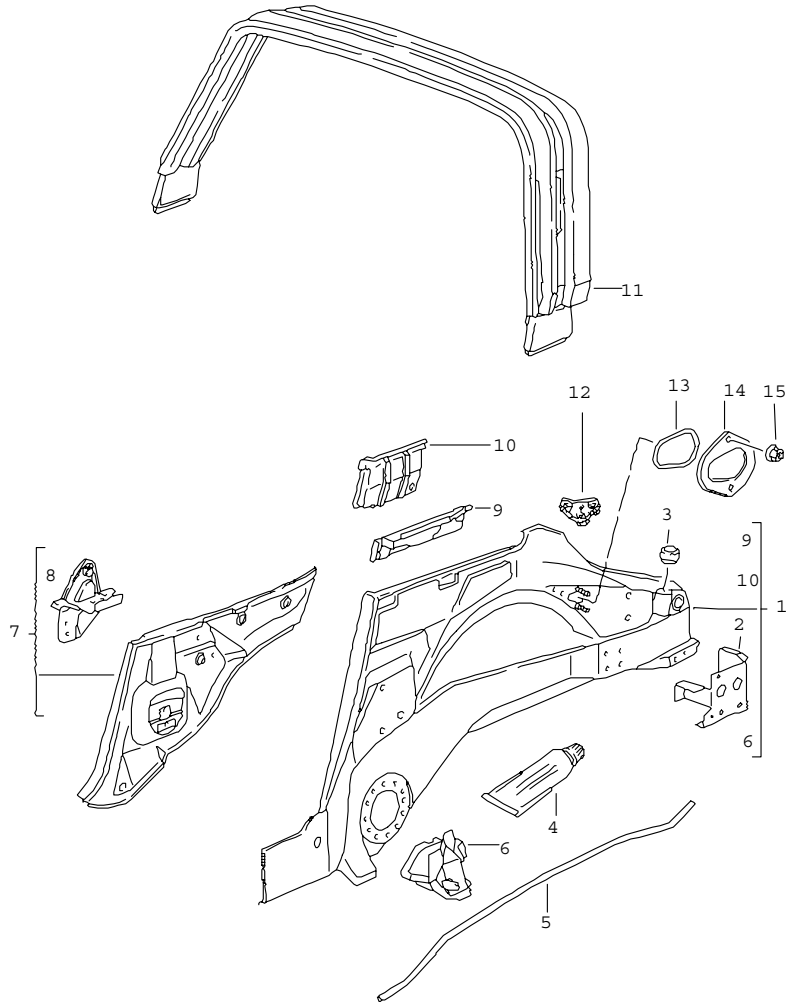

Pos	Part Number	Name	Remarks	Qty	Model
		interior panelling rear			TARGA/CABRIO SPEEDSTER
1	964 502 017 40	wheel housing	/L	1	TARGA
(1)	964 502 018 40	wheel housing	/R	1	TARGA
(1)	965 502 017 61	wheel housing	/L	1	CABRIO
(1)	965 502 018 61	wheel housing	/R	1	CABRIO
(1)	964 502 017 04	wheel housing	/L	1	SPEEDSTER
	GRV	prime coated			
(1)	964 502 018 04	wheel housing	/R	1	SPEEDSTER
	GRV	prime coated			
2	964 502 161 00	reinforcement	/L	1	
(2)	964 502 162 00	reinforcement	/R	1	
3	911 107 726 11	filler neck for filler tube		1	
4	000 043 176 01	adhesive		1	
5	964 502 283 01	guide tube for lid-release cable		1	
6	964 502 085 00	bracket	/L	1	
	GRV	prime coated for jacking point			
(6)	964 502 086 00	bracket	/R	1	
	GRV	prime coated for jacking point			
7	964 501 061 40	interior panel	/L	1	TARGA
(7)	964 501 062 40	interior panel	/R	1	TARGA
(7)	964 501 061 61	interior panel	/L	1	CABRIO
(7)	964 501 062 61	interior panel	/R	1	CABRIO
(7)	964 501 061 00	interior panel	/L	1	SPEEDSTER
	GRV	prime coated			
(7)	964 501 062 00	interior panel	/R	1	SPEEDSTER

Pos	Part Number	Name	Remarks	Qty	Model
	GRV	prime coated			
8	964 501 465 60	convertible top support	/L	1	CABRIO
(8)	964 501 466 60	convertible top support	/R	1	CABRIO
9	964 502 465 60	insert	/L	1	CABRIO
(9)	964 502 466 60	insert	/R	1	CABRIO
(9)	964 502 651 00	insert	/L	1	SPEEDSTER
	GRV	prime coated			
(9)	964 502 652 00	insert	/R	1	SPEEDSTER
	GRV	prime coated			
10	964 502 503 40	filler plate	/L	1	TARGA
(10)	964 502 504 40	filler plate	/R	1	TARGA
11	964 502 005 40	roll bar		1	TARGA
12	964 504 610 00	rubber sleeve for oil hose		1	
-	000 043 172 00	sealing cord roller with 10 meters $ 9 MM		*	
13	-	250 MM		1	
14	964 572 565 00	cover for cars without air conditioner		1	
15	999 084 075 02	lock nut M 6		2	
		- -- E N D -- -			

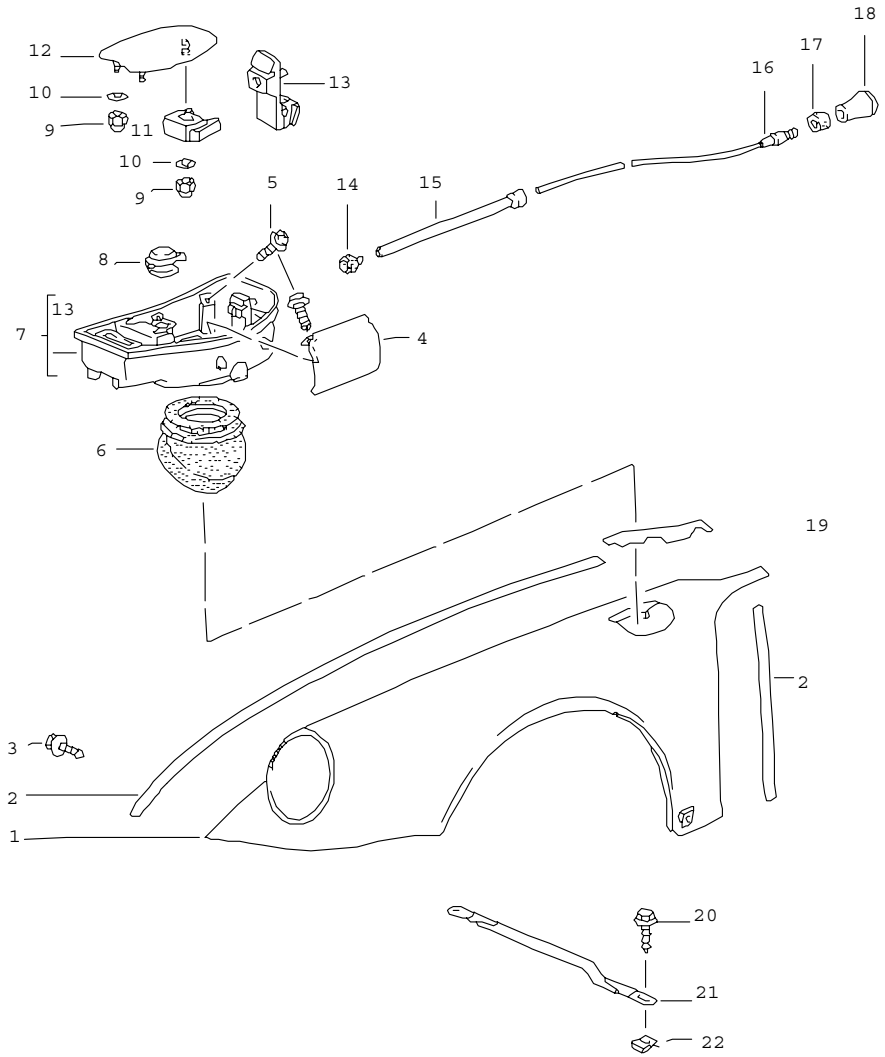

Pos	Part Number	Name	Remarks	Qty	Model
		exterior panelling front			
(1)	964 503 031 02	wing	/L	1	CARRERA 2/4
	GRV	prime coated			
(1)	964 503 032 02	wing	/R	1	CARRERA 2/4
	GRV	prime coated			
(1)	964 503 031 04	wing	/L	1	CARRERA RS
(1)	964 503 032 04	wing	/R	1	CARRERA RS
(1)	965 503 031 02	wing	/L	1	TURBO/
	GRV	prime coated			TURBO-LOOK
(1)	965 503 032 02	wing	/R	1	TURBO/
	GRV	prime coated			TURBO-LOOK
(1)	965 503 031 04	wing	/L	1	TURBO 3,6
	GRV	prime coated			
(1)	965 503 032 04	wing	/R	1	TURBO 3,6
	GRV	prime coated			
2	000 043 129 00	sealing strap 25 X 2 MM		X	
3	999 450 007 02	screw B 6,3 X 19		32	
4	964 201 279 00	protective flap		1	
5	999 919 089 07	screw B 5 X 16		4	
(6)	964 201 267 01	sleeve		1	
7	964 201 030 00	cup		1	
8	964 201 507 00	cover for filler neck water reservoir		1	
9	900 085 011 07	cap nut M 5		3	
10	900 151 027 07	washer A 5,3		3	
11	964 504 375 00	support		1	

Pos	Part Number	Name	Remarks	Qty	Model
12	964 504 033 00	cover for tank filler neck		1	
13	964 201 167 00	latch		1	
14	964 201 675 00	grommet		1	
15	964 504 507 00	guide tube		1	
16	993 504 337 00	cable		1	
17	999 209 004 40	grommet		1	
18	901 552 822 00	knob		1	
19	911 799 503 07	wing seal		2	
20	900 187 108 02	tapping screw B 6,3 X 16		4	
21	964 504 141 00	wing strut		2	CARRERA 2/4
(21)	964 504 141 01	wing strut		2	CARRERA RS
(21)	965 504 141 00	wing strut		2	TURBO/ TURBO-LOOK
22	999 591 486 02	speed nut B 6,3		4	
		- -- E N D -- -			

Pos	Part Number	Name	Remarks	Qty	Model

Model	Year	MG	SG	Illustration	Restrictions	Update			
964	94	8	01	801-31		194	17:58	24.11.2005	PORSCHE PET PORSCHE

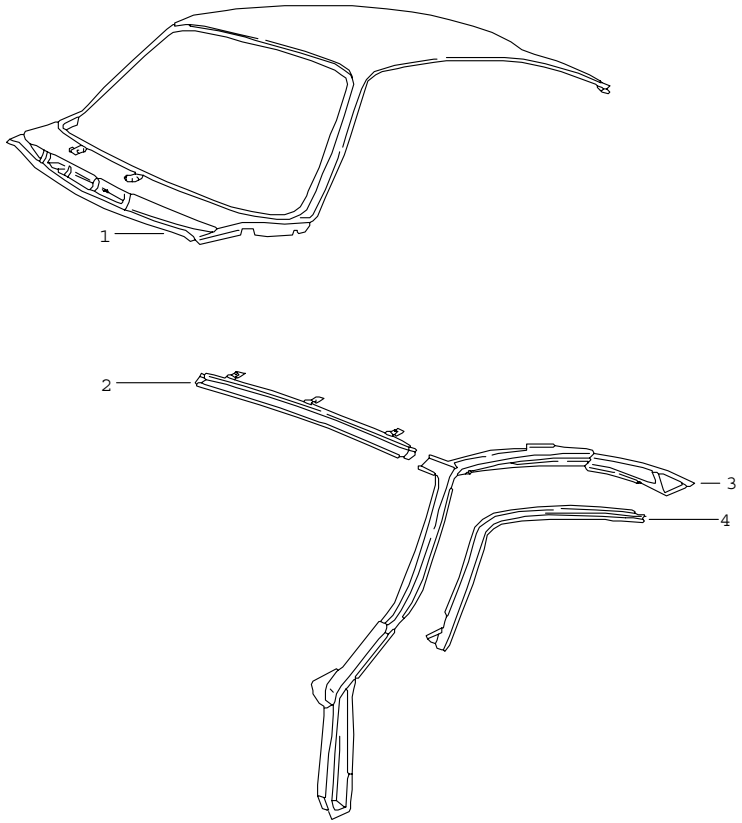

Pos	Part Number	Name	Remarks	Qty	Model
		exterior panelling centre			COUPE
1	964 503 087 00	outer roof panel		1	
(1)	964 503 087 01	outer roof panel		1	M 650
2	964 502 143 00	cross piece for windscreen for cars without sunroof it is necessary to rework		1	M 650
3	964 502 029 00	roof frame	/L	1	
(3)	964 502 030 00	roof frame	/R	1	
4	964 502 551 00	metal sheet to bend	/L	1	
(4)	964 502 552 00	metal sheet to bend	/R	1	
		- -- E N D -- -			

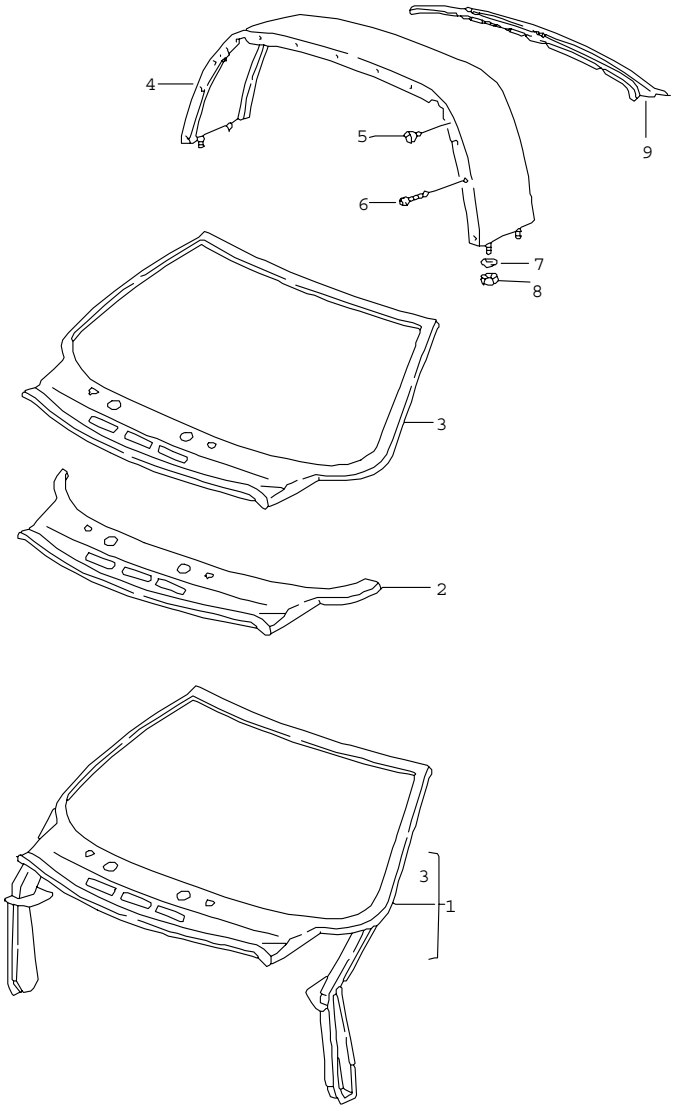

Pos	Part Number	Name	Remarks	Qty	Model
		exterior panelling centre			TARGA/CABRIO SPEEDSTER
1	964 599 503 34	windscreen frame		1	TARGA/CABRIO
2	964 503 087 05	cowl		1	SPEEDSTER
	GRV	prime coated			
3	964 503 087 40	windscreen frame		1	TARGA/CABRIO
		for windscreen frame			
4	964 565 043 40	lining for roll bar		1	TARGA
	9XM	black mat	-92		
	70K	black	93-		
5	999 064 037 40	screw plug		4	TARGA
6	N 013 957 5	tapping screw B 3,5 X 9,5		15	TARGA
7	900 151 007 02	washer A 7,4		4	TARGA
8	900 076 010 02	hexagon nut M 6		4	TARGA
9	964 503 511 40	centre part		1	
		- -- E N D -- -			

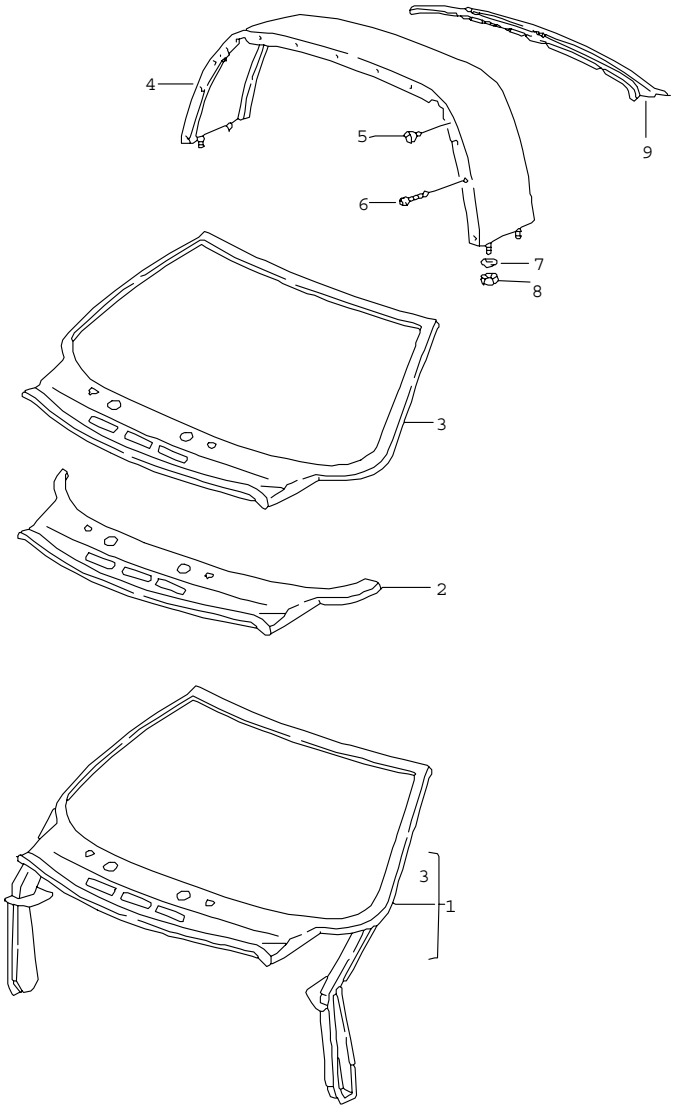

Pos	Part Number	Name	Remarks	Qty	Model
		exterior panelling centre			TARGA/CABRIO SPEEDSTER
1	964 599 503 34	windscreen frame		1	TARGA/CABRIO
2	964 503 087 05	cowl		1	SPEEDSTER
	GRV	prime coated			
3	964 503 087 40	windscreen frame		1	TARGA/CABRIO
		for windscreen frame			
4	964 565 043 40	lining for roll bar		1	TARGA
	9XM	black mat	-92		
	70K	black	93-		
5	999 064 037 40	screw plug		4	TARGA
6	N 013 957 5	tapping screw B 3,5 X 9,5		15	TARGA
7	900 151 007 02	washer A 7,4		4	TARGA
8	900 076 010 02	hexagon nut M 6		4	TARGA
9	964 503 511 40	centre part		1	
		- -- E N D -- -			

Model	Year	MG	SG	Illustration	Restrictions	Update	17:58	24.11.2005	PORSCHE PET PORSCHE
964	94	8	01	801-35		194			

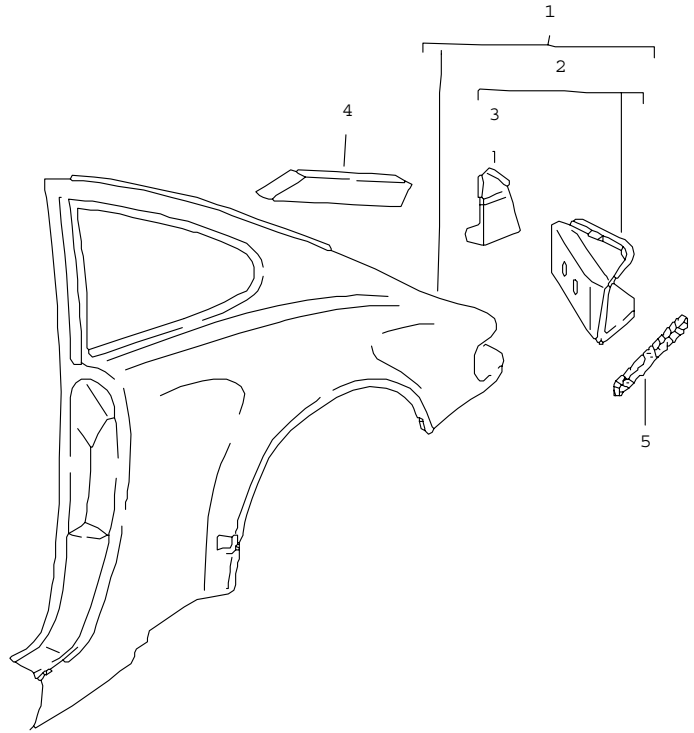

Pos	Part Number	Name	Remarks	Qty	Model
		exterior panelling rear			COUPE
(1)	964 503 061 01	side section	/L	1	CARRERA 2/4/ CARRERA RS
(1)	964 503 062 01	side section	/R	1	CARRERA 2/4/ CARRERA RS
(1)	965 503 061 01	side section	/L	1	TURBO
	GRV	prime coated			
(1)	965 503 062 01	side section	/R	1	TURBO
	GRV	prime coated			
2	964 503 055 01	frame for light	/L	1	
(2)	964 503 056 01	frame for light	/R	1	
3	964 503 095 00	gusset plate	/L	1	
(3)	964 503 096 00	gusset plate	/R	1	
4	A 911 504 933 00	seal	/L	1	
(4)	A 911 504 934 00	seal	/R	1	
4	993 504 847 00	seal	/L	1	
(4)	993 504 848 00	seal	/R	1	
-	000 043 204 88	sealing strap roller with 10 meters 9 X 3		*	
5	-	400 MM		2	
		- -- E N D -- -			

Model	Year	MG	SG	Illustration	Restrictions	Update	17:59	24.11.2005	PORSCHE PET PORSCHE
964	94	8	01	801-40		194			

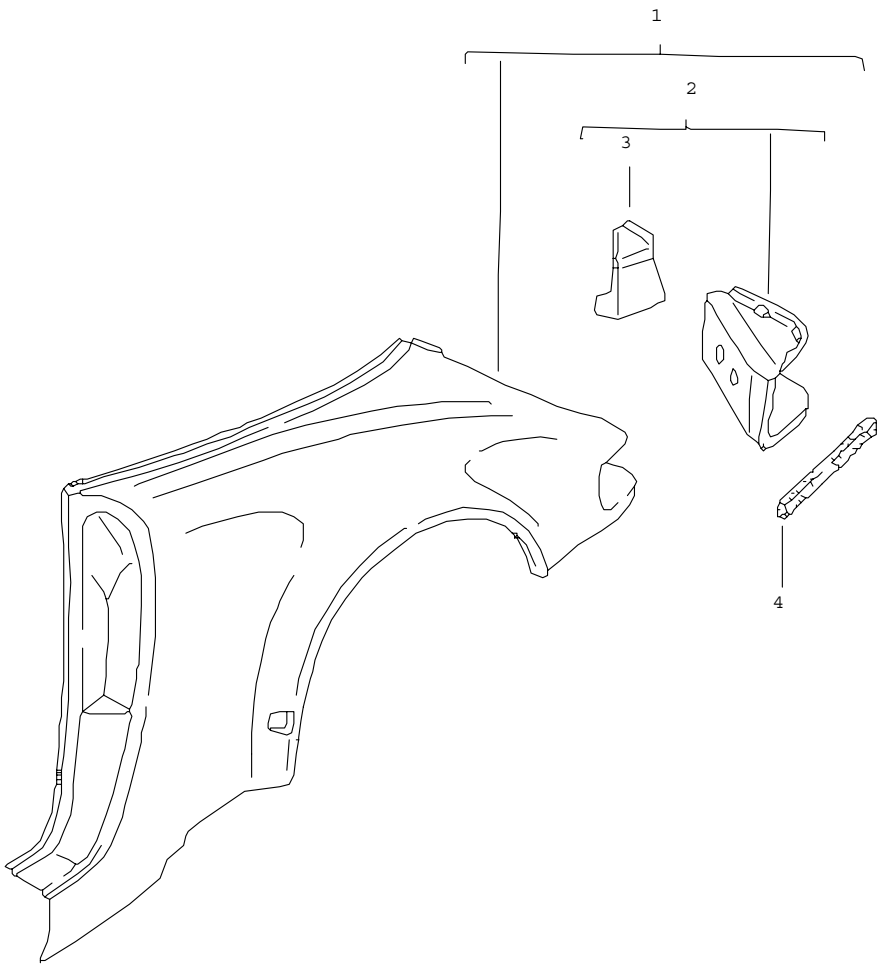

Pos	Part Number	Name	Remarks	Qty	Model
		exterior panelling rear			TARGA/CABRIO SPEEDSTER
(1)	964 503 061 41	side section	/L	1	TARGA
(1)	964 503 062 41	side section	/R	1	TARGA
(1)	964 503 061 61	side section	/L	1	CABRIO
(1)	964 503 062 61	side section	/R	1	CABRIO
(1)	964 503 061 02	side section	/L	1	SPEEDSTER
	GRV	prime coated			
(1)	964 503 062 02	side section	/R	1	SPEEDSTER
	GRV	prime coated			
(1)	965 503 061 60	side section	/L	1	CABRIO/
	GRV	prime coated			TURBO-LOOK
(1)	965 503 062 60	side section	/R	1	CABRIO/
	GRV	prime coated			TURBO-LOOK
2	964 503 055 01	frame for light	/L	1	
(2)	964 503 056 01	frame for light	/R	1	
3	964 503 095 00	gusset plate	/L	1	
(3)	964 503 096 00	gusset plate	/R	1	
-	000 043 204 88	sealing strap roller with 10 meters 9 X 3		*	
4	-	400 MM		2	
		- -- E N D -- -			

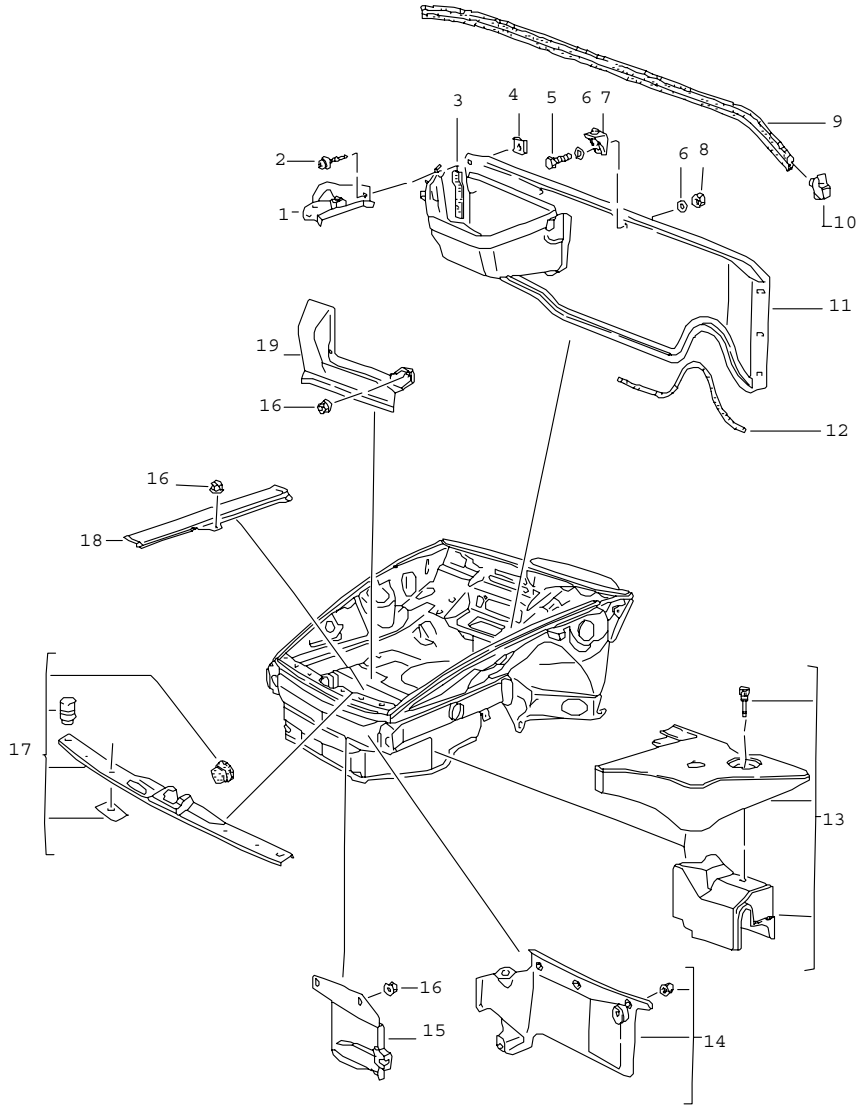

Pos	Part Number	Name	Remarks	Qty	Model
		cover body front section			
1	964 610 033 00	cover		1	
2	900 143 177 02	combination tapping screw B 4,2 X 13		6	
3	964 504 471 00	beading		1	
4	999 591 850 02	speed nut B 4,2		6	
5	N 010 207 6	hexagon-head bolt M 5 X 12		2	
6	900 025 003 02	washer A 5,3		4	
7	964 624 033 00	retaining bracket		1	
8	N 011 005 14	hexagon nut M 5		2	
9	999 911 491 00	gasket		1	
10	964 504 521 00	end piece		2	
11	964 504 051 00	cross panel	/LL	1	
(11)	964 504 052 00	cross panel	/RL	1	
12	964 504 525 00	gasket cover for hydraulic unit see group 6/05/00		1	
14	-	cover for power-steering pump see group 6/05/00		X	
15	964 611 212 00	cover for jack		1	
16	999 591 839 40	hexagon nut		8	
17	-	cover for lock lower part see group 8/07/00		X	

Pos	Part Number	Name	Remarks	Qty	Model	Pos	Part Number	Name	Remarks	Qty	Model
18	964 612 112 00	cover for battery-starter cable		1							
19	964 612 231 00	cover for battery-starter cable	/RL	1							
		- -- E N D -- -									

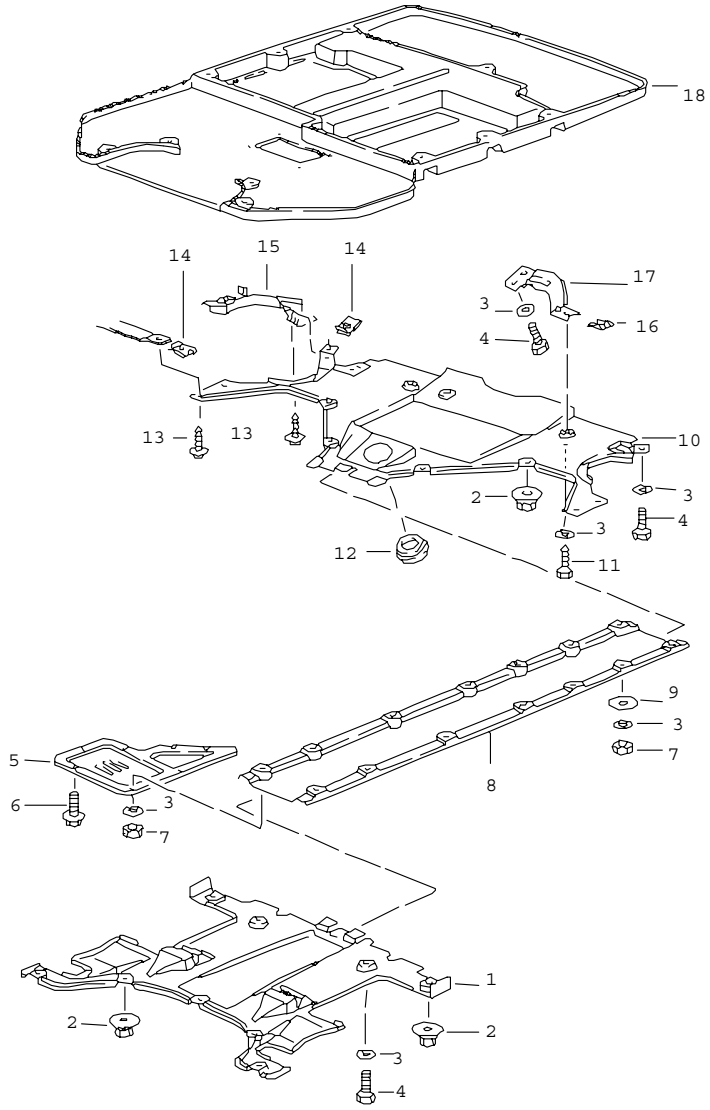

Pos	Part Number	Name	Remarks	Qty	Model
		cover underbody			
1	964 504 127 00	cover		1	M 339
(1)	964 504 127 01	cover front		1	
2	999 049 022 40	plastic nut		11	
3	N 011 666 7	washer A 6,4		28	
4	900 075 057 02	hexagon-head bolt M 6 X 16		8	
5	964 504 231 00	cover	/LL	1	
(5)	964 504 232 00	cover	/RL	1	
6	900 075 393 02	screw M 6 X 12		6	
7	900 076 010 02	hexagon nut M 6		16	
8	993 504 043 00	cover centre		1	
9	999 025 901 02	washer A 9,5 X 22 X 2		14	
10	964 504 129 02	floor section manual transmission	89	1	
(10)	964 504 129 02	cover manual transmission	90-	1	CARRERA
(10)	965 504 129 01	cover manual transmission		1	TURBO
(10)	964 504 109 00	cover TIPTRONIC		1	
11	900 187 015 02	tapping screw B 6,3 X 16		2	
12	964 504 465 02	cover	89	1	
(12)	964 504 465 02	cover	90-	1	M 339
13	900 143 101 02	combination tapping screw B 4,8 X 16		10	
14	999 591 699 02	speed nut B 4,8		10	

Pos	Part Number	Name	Remarks	Qty	Model
(15)	965 504 133 00	cover	/L	1	TURBO/ TURBO-LOOK
15	965 504 134 00	cover	/R	1	TURBO/ TURBO-LOOK
16	999 507 003 02	speed nut B 6,3		2	
17	964 504 133 02	support	/L	1	
(17)	964 504 134 02	support	/R	1	
18	-	engine capsule see group 1/05/10			

- -- E N D -- -

Model	Year	MG	SG	Illustration	Restrictions	Update				
964	94	8	01	801-50		194	17:59	24.11.2005	PORSCHE	PET	PORSCHE

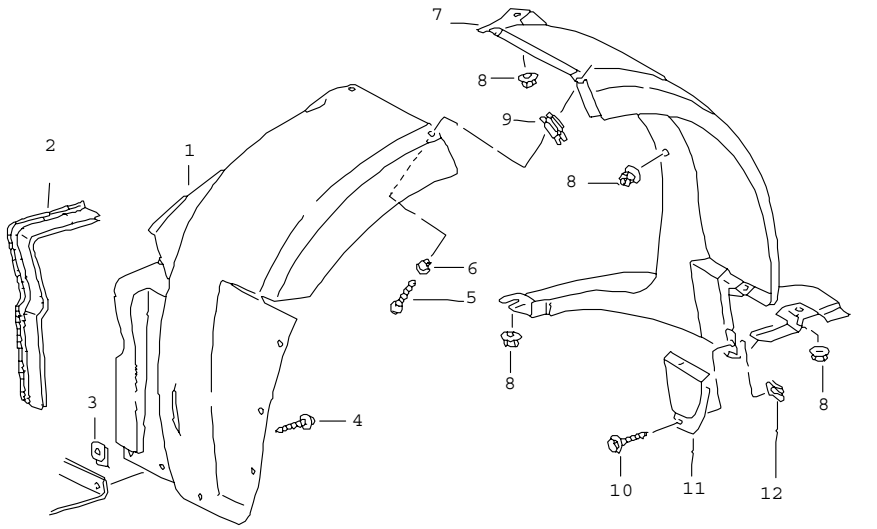

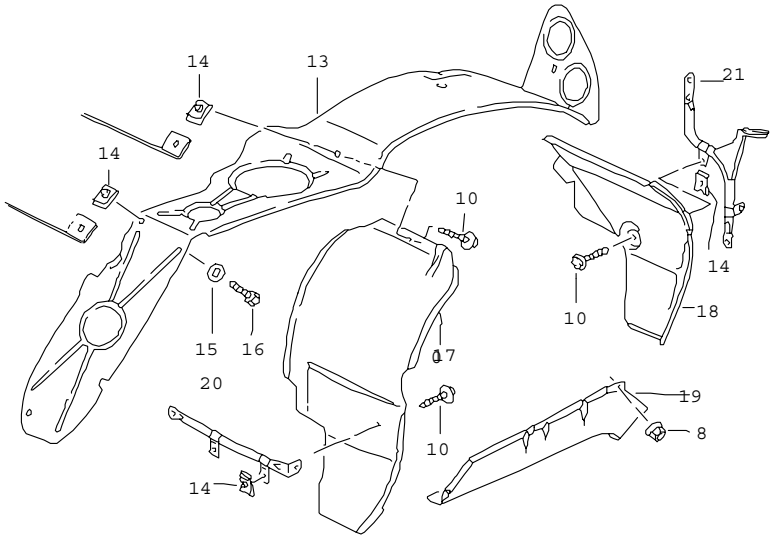

Pos	Part Number	Name	Remarks	Qty	Model
		cover wheel housing			
1	964 504 125 00	wheel-housing liner	/V/L	1	CARRERA 2/4
(1)	964 504 126 00	wheel-housing liner	/V/R	1	CARRERA 2/4
(1)	964 504 125 01	wheel-housing liner	/V/L	1	CARRERA RS
(1)	964 504 126 01	wheel-housing liner	/V/R	1	CARRERA RS
(1)	965 504 125 01	wheel-housing liner	/V/L	1	TURBO/ TURBO-LOOK
(1)	965 504 126 01	wheel-housing liner	/V/R	1	TURBO/ TURBO-LOOK
2	964 504 523 00	sealing rubber		2	
3	999 591 699 02	speed nut B 4,8		12	
4	900 143 149 07	screw B 4,8 X 16		12	
5	900 143 113 07	tapping screw B 4,2 X 13		4	
6	951 505 157 00	spacer		4	
7	964 504 203 00	wheel-housing liner	/V/L	1	CARRERA 2/4/ CARRERA RS
(7)	964 504 204 00	wheel-housing liner	/V/R	1	CARRERA 2/4/ CARRERA RS
(7)	965 504 203 01	wheel-housing liner	/V/L	1	TURBO/ TURBO-LOOK
(7)	965 504 204 01	wheel-housing liner	/V/R	1	TURBO/ TURBO-LOOK
8	999 049 022 40	plastic nut		12	
9	999 591 850 02	speed nut B 4,2		4	
10	900 143 159 07	screw B 4,8 X 19		12	
11	964 504 219 00	cover	/L	1	CARRERA 2/4/ CARRERA RS
(11)	964 504 220 00	cover	/R	1	CARRERA 2/4/ CARRERA RS
(11)	965 504 219 01	cover	/L	1	TURBO/ TURBO-LOOK

Pos	Part Number	Name	Remarks	Qty	Model
(11)	965 504 220 01	cover	/R	1	TURBO/ TURBO-LOOK
12	999 591 883 02	clamp B 4,8		4	
13	964 504 303 00	wheel-housing liner	/H/L	1	
14	999 591 485 02	speed nut B 4,8		11	
15	900 151 027 02	washer A 5,3		5	
16	900 187 018 02	hexagon-head tapping screw B 4,8 X 16		5	
17	965 504 463 00	wheel-housing liner	/H/L	1	TURBO/ TURBO-LOOK
(17)	965 504 464 00	wheel-housing liner	/H/R	1	TURBO/ TURBO-LOOK
18	965 504 305 00	wheel-housing liner	/H/L	1	TURBO/ TURBO-LOOK
(18)	965 504 306 00	wheel-housing liner	/H/R	1	TURBO/ TURBO-LOOK
19	965 504 271 00	cover	/H/L	1	TURBO
20	-	see group 8/10/05			
21	-	see group 8/02/05			
		- -- E N D -- -			

Pos	Part Number	Name	Remarks	Qty	Model

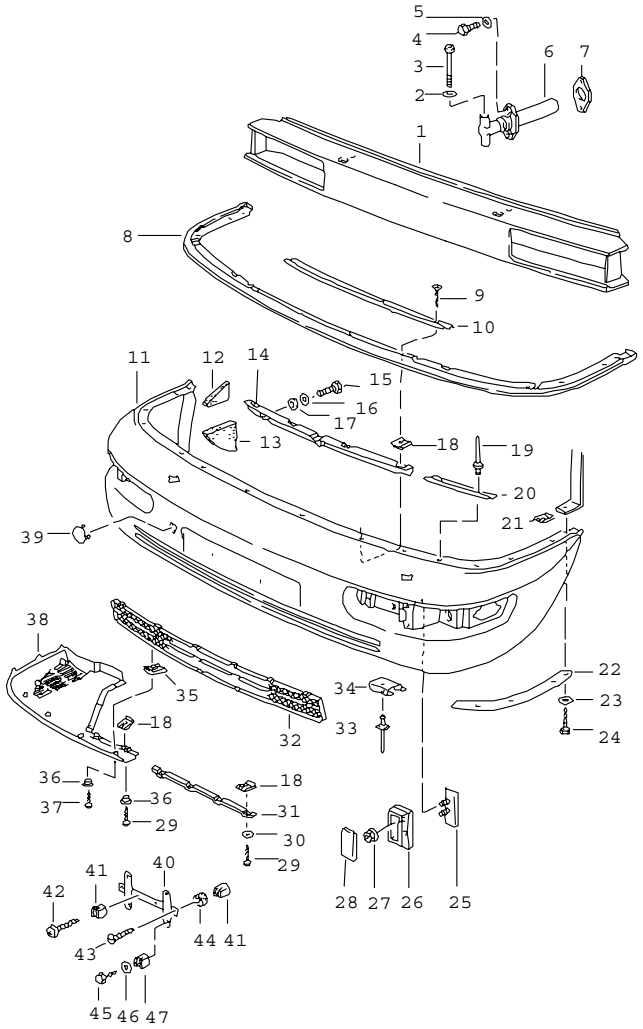

Pos	Part Number	Name	Remarks	Qty	Model
		bumper front			
1	964 505 010 00	bumper reinforcement		1	
2	900 025 009 02	washer A 13		2	
3	900 067 084 02	pan-head screw M 12 X 110		2	
4	900 075 339 08	hexagon-head bolt M 8 X 30		4	
5	N 011 525 15	washer A 8,4		4	
6	928 505 015 22	impact absorber		2	M 058
(6)	993 505 019 00	impact pipe		2	
(7)	996 505 775 00	desk pad		2	
7	993 505 775 00	desk pad		2	M 058
8	964 505 143 01	sealing strip		1	CARRERA 2/4/ CARRERA RS
	01C	satin black			
(8)	965 505 143 01	sealing strip		1	TURBO/ TURBO-LOOK
	01C	satin black			
9	900 145 092 07	tapping screw B 4,8 X 22		4	
10	964 505 021 00	rail		1	
(11)	964 505 113 00	lining		1	CARRERA RS
	G2X	prime coated			
11	964 505 113 01	lining		1	C.2/4/ C.RS M 002/ M 288
	G2X	prime coated			
(11)	965 505 113 01	lining		1	TURBO/ TURBO-LOOK
	G2X	prime coated			
12	964 575 339 00	sealing wedge		1	
13	964 575 337 00	sealing wedge		1	

Pos	Part Number	Name	Remarks	Qty	Model
14	964 505 031 00	retaining strip		1	
15	900 075 260 02	hexagon-head bolt M 6 X 16		4	
16	N 011 666 7	washer A 6,4		4	
17	999 704 150 40	washer 6,4 X 16 X 1,5		4	
18	999 591 699 02	speed nut B 4,8		18	
19	999 190 104 30	blind rivet 3,2 X 7,9		4	
20	964 505 111 01	insert		2	
21	999 591 485 02	speed nut B 4,8		8	
22	964 505 033 01	retaining strip	/L	1	CARRERA 2/4/ CARRERA RS
(22)	964 505 034 01	retaining strip	/R	1	CARRERA 2/4/ CARRERA RS
(22)	965 505 033 01	retaining strip	/L	1	TURBO/ TURBO-LOOK
(22)	965 505 034 01	retaining strip	/R	1	TURBO/ TURBO-LOOK
23	900 151 027 02	washer A 5,3		8	
24	900 187 121 02	tapping screw B 4,8 X 22		8	
29	900 143 147 07	tapping screw B 4,8 X 16		14	
30	N 011 523 13	washer A 5,3		4	
31	964 505 153 00	retaining strip		1	
32	964 505 141 00	ventilation grille		1	
33	999 190 104 30	rivet 3,2 X 7,9		X	
34	964 505 905 00	support		X	
35	N 902 689 01	speed nut B 4,2		8	
36	951 505 157 00	spacer		18	
37	900 143 085 07	tapping screw B 4,2 X 16		8	
37	N 013 966 17	tapping screw B 4,2 X 13		8	
(38)	964 505 151 00	lower part	/L	1	CARRERA 2/4/ CARRERA RS
	01C	lower part			
38	964 505 152 00	lower part	/R	1	CARRERA 2/4/ CARRERA RS
	01C	satin black			
(38)	965 505 151 01	lower part	/L	1	TURBO/ TURBO-LOOK
	01C	satin black			
(38)	965 505 152 01	lower part	/R	1	TURBO/ TURBO-LOOK
	01C	satin black			
39	964 505 103 00	cap		1	
	G2X	prime coated			
40	928 701 050 03	support		1	
41	999 507 040 40	expander nut		4	
42	900 143 151 02	combination tapping screw B 4,2 X 16		2	
43	900 145 012 07	counters. head tapp. screw B 4,2 X 32		2	
44	964 701 505 00	spacer ring		2	
45	900 143 134 00	tapping screw B 4,2 X 9,5		4	
46	N 011 522 8	washer A 4,3		4	
47	999 591 498 40	special nut		4	

- -- E N D -- -

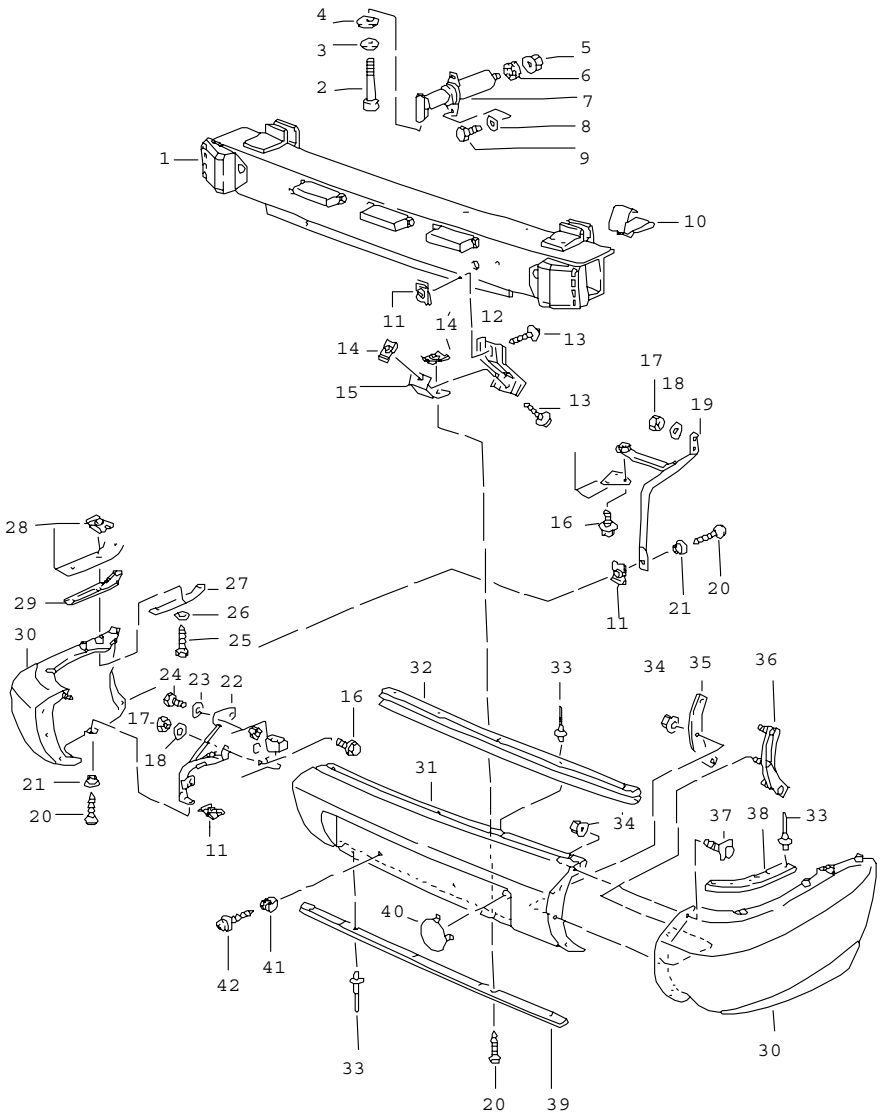

Pos	Part Number	Name	Remarks	Qty	Model
		bumper rear			
1	964 505 020 00	bumper reinforcement		1	CARRERA 2/4/ TURBO TURBO-LOOK
1	964 505 020 02	bumper reinforcement		1	CARRERA RS TURBO 3,6
2	900 067 084 02	pan-head screw M 12 X 110		2	
3	900 025 009 02	washer A 13		2	
4	928 505 243 02	eccentric washer		2	
5	999 084 075 02	lock nut M 6		2	
6	911 511 332 00	spacer		2	
7	964 505 016 00	impact absorber		2	M 058
(7)	964 505 018 00	impact pipe		2	
8	N 011 525 15	washer A 8,4		4	
9	900 075 339 08	hexagon-head bolt M 8 X 30		4	
10	999 591 867 02	bracket		2	
11	999 591 699 02	speed nut B 4,8		6	
12	964 505 279 02	rear support		2	
13	900 143 101 02	combination tapping screw B 4,8 X 16		4	
14	999 591 938 02	clamp B 4,8		4	
15	964 505 289 00	support		2	
16	900 075 268 02	screw M 6 X 16		2	
-	999 190 128 30	blind rivet A 4,8 X 7,4		4	
-	964 503 469 00	mounting plate		2	
17	900 076 010 02	hexagon nut M 6		6	

Pos	Part Number	Name	Remarks	Qty	Model
18	N 011 666 7	washer A 6,4		6	
19	964 505 475 00	support tube		2	CARRERA 2/4/ CARRERA RS
(19)	965 505 475 00	support tube	/L	1	TURBO/ TURBO 3,6/ TURBO-LOOK
(19)	965 505 476 00	support tube	/R	1	TURBO/ TURBO 3,6/ TURBO-LOOK
20	900 143 147 07	tapping screw B 4,8 X 16		4	
21	951 505 157 00	spacer		4	
22	965 505 495 00	support tube	/L	1	
(22)	965 505 496 00	support tube	/R	1	
23	900 151 008 02	washer A 8,4		4	
24	900 075 087 02	hexagon-head bolt M 8 X 16		4	
25	900 187 004 02	hexagon-head tapping screw B 4,8 X 19		6	
26	900 025 003 02	washer A 5,3		6	
27	964 505 443 00	attachment strip	/L	1	CARRERA 2/4/ CARRERA RS
(27)	964 505 444 00	attachment strip	/R	1	CARRERA 2/4/ CARRERA RS
(27)	965 505 443 00	attachment strip	/L	1	TURBO/ TURBO 3,6/ TURBO-LOOK
(27)	965 505 444 00	attachment strip	/R	1	TURBO/ TURBO 3,6/ TURBO-LOOK
28	999 591 350 02	clamp B 4,8		6	
29	964 505 341 00	piping	/L	1	CARRERA 2/4/ CARRERA RS
	01C	satin black			
(29)	964 505 342 00	piping	/R	1	CARRERA 2/4/ CARRERA RS
	01C	satin black			
(29)	965 505 341 01	piping	/L	1	TURBO/ TURBO 3,6/ TURBO-LOOK
	01C	satin black			
(29)	965 505 342 01	piping	/R	1	TURBO/ TURBO 3,6/ TURBO-LOOK
	01C	satin black			
30	964 505 163 00	lining	/L	1	CARRERA 2/4/ CARRERA RS
	G2X	prime coated			
30	964 505 164 00	lining	/R	1	CARRERA 2/4/ CARRERA RS
	G2X	prime coated			
(30)	965 505 163 00	lining	/L	1	TURBO/ TURBO 3,6
	G2X	prime coated			
(30)	965 505 163 01	lining	/L	1	TURBO-LOOK
	G2X	prime coated			
(30)	965 505 164 00	lining	/R	1	TURBO/ TURBO 3,6/ TURBO-LOOK
	G2X	prime coated			
31	964 505 123 00	lining		1	CARRERA 2/4/ TURBO/ TURBO-LOOK
	G2X	prime coated			
(31)	964 505 123 02	lining		1	CARRERA RS TURBO 3,6
	G2X	prime coated			
32	964 505 447 00	retaining strip		1	
33	999 190 104 30	blind rivet A 3,2 X 7,9		10	

Pos	Part Number	Name	Remarks	Qty	Model	Pos	Part Number	Name	Remarks	Qty	Model
34	999 084 078 02	hexagon nut M 5		8							
35	964 505 271 02	plate		2							
36	964 505 091 01	mounting plate		2							
37	964 505 625 01	mounting		2							
(38)	965 505 457 00	reinforcement strip	/L	1							
38	965 505 458 00	reinforcement strip	/R	1							
39	964 505 269 00	reinforcement strip		1							
40	964 505 103 00	cap		1							
	G2X	prime coated									
41	999 507 040 40	expander nut		2							
42	900 143 151 02	combination tapping screw B 4,2 X 16		2							
		- -- E N D -- -									

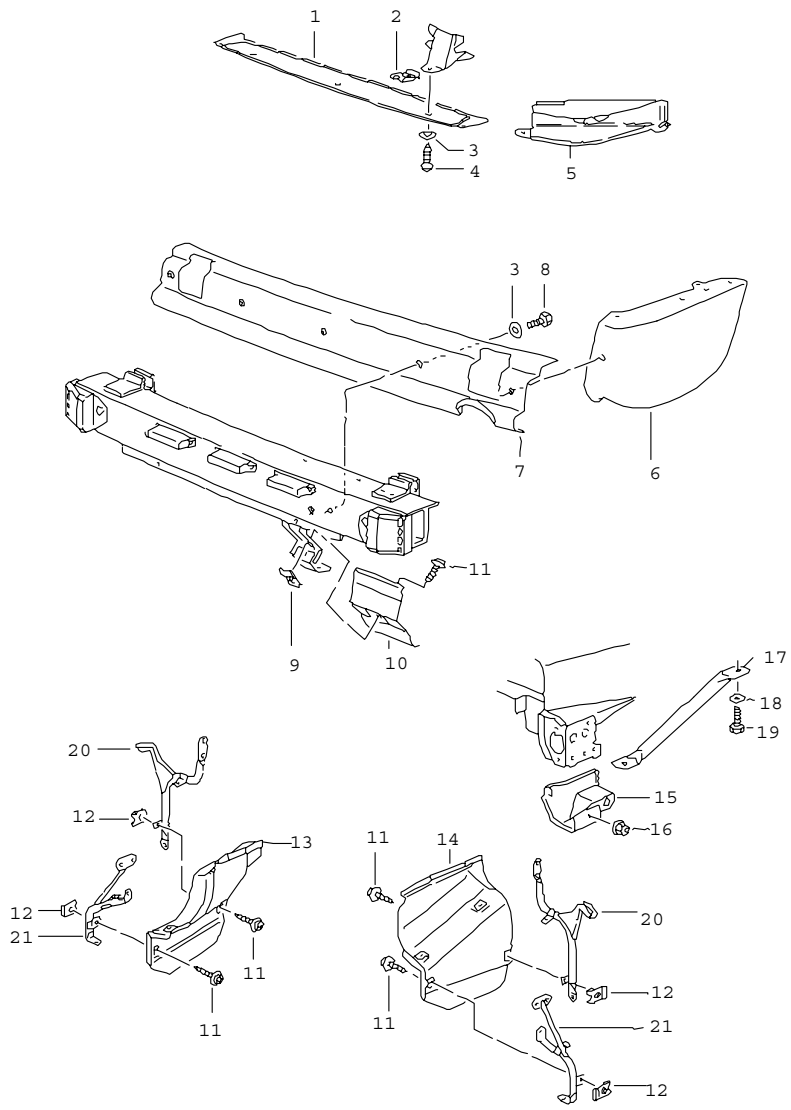

Pos	Part Number	Name	Remarks	Qty	Model
		heat protection for bumper rear			
1	964 505 083 01	heat protection for covering		1	
2	999 591 938 02	clamp B 4,8		3	
3	900 151 027 02	washer A 5,3		8	
4	900 143 046 02	tapping screw B 4,8 X 16		3	
(5)	964 505 513 00	heat protection for frame for light	/L	1	
5	964 505 514 00	heat protection for frame for light	/R	1	
(6)	964 505 081 01	heat protection	/L	1	CARRERA 2/4/ CARRERA RS
6	964 505 082 01	heat protection	/R	1	CARRERA 2/4/ CARRERA RS
(6)	965 505 081 00	heat protection	/L	1	TURBO/ TURBO-LOOK
(6)	965 505 082 00	heat protection	/R	1	TURBO/ TURBO-LOOK
7	964 505 073 01	heat protection		1	CARRERA 2/4/ CARRERA RS/ TURBO-LOOK
(7)	965 505 073 01	heat protection		1	TURBO
8	900 278 025 02	hexagon-head bolt M 5 X 12		5	
9	999 591 938 02	clamp B 4,8		1	
10	965 505 447 00	cover plate for turbocharger		1	TURBO
11	900 143 101 02	combination tapping screw B 4,8 X 16		9	

Pos	Part Number	Name	Remarks	Qty	Model
12	999 591 485 02	speed nut B 4,8		8	
13	965 504 405 01	protection plate for heater	/L	1	TURBO
14	965 505 248 00	heat protection for muffler	/R	1	TURBO
15	965 505 091 00	heat protection for side member	/R	1	TURBO
16	999 049 008 40	plastic nut		1	
17	964 504 875 00	support tube		2	
18	900 151 008 02	washer 8,4		4	
19	N 010 241 0	hexagon-head bolt M 8 X 22		4	
20	-	see group 8/02/05			
21	-	see group 8/02/05			
		- -- E N D -- -			

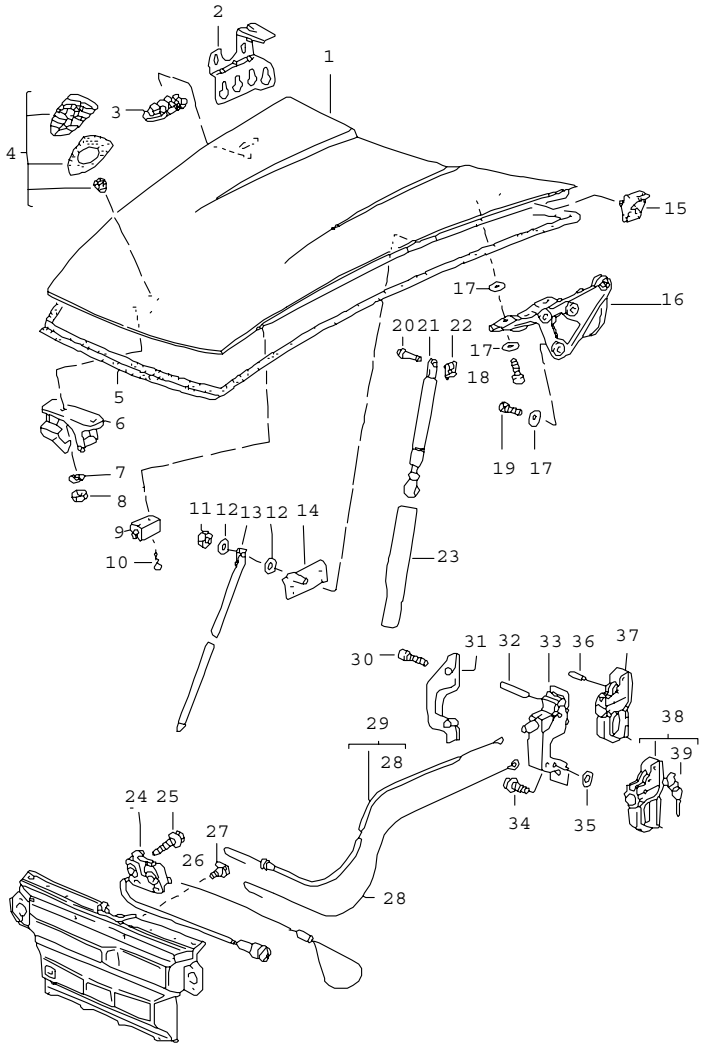

Pos	Part Number	Name	Remarks	Qty	Model
		cover front			
1	964 511 010 00	cover		1	CARRERA 2/4/ TURBO/ TURBO-LOOK
1	911 511 010 30	cover		1	CARRERA RS
2	964 632 106 01	retaining frame and stop for contact switch	-91	1	
3	999 703 226 40	cap		2	
4	-	lid emblem see group 8/10/00			
5	964 504 123 01	rubber seal		1	
6	964 511 051 00	lock upper part		1	
7	N 011 666 7	washer A 6,4		2	
8	900 076 010 02	hexagon nut M 6		2	
9	999 507 372 07	holder		1	CARRERA RS
10	900 138 001 02	tapping screw B 2,9 X 6,5		2	
11	900 910 010 09	lock nut M 6		1	
12	N 011 524 7	washer A 6,4		2	
13	964 511 569 00	bracket		1	CARRERA RS
14	964 511 551 00	support		1	CARRERA RS
15	964 511 221 00	rubber stop		2	
16	993 511 031 00	hinge	/L	1	
	GRV	prime coated			
(16)	993 511 032 00	hinge	/R	1	
	GRV	prime coated			
17	900 151 008 02	washer A 8,4		14	

Pos	Part Number	Name	Remarks	Qty	Model
18	900 067 342 02	pan-head screw M 8 X 22		4	
19	900 075 087 02	hexagon-head bolt M 8 X 16		6	
20	999 166 043 02	bolt		2	
21	993 511 331 00	gas-filled strut		2	CARRERA 2/4/ TURBO/ TURBO-LOOK
22	N 012 645 2	lock		2	
23	964 511 591 00	protective tube	/R	1	CARRERA 2/4/ TURBO/ TURBO-LOOK
(24)	911 511 052 01	lock lower part	-91	1	
24	964 511 052 00	lock lower part	92-	1	
25	A 900 075 417 02	hexagon-head bolt		2	
25	900 075 417 02	screw M 6 X 30		2	
26	964 512 521 00	emergency operation		1	
27	911 511 067 00	clamp		1	
28	964 511 073 01	wire pull		1	
29	964 511 053 00	bowden cable	/LL	1	
(29)	964 511 053 01	bowden cable	/RL	1	
30	900 119 091 02	pan-head screw M 6 X 16		2	
31	964 538 625 00	cover	/LL	1	
	01C	satin black			
(31)	964 538 626 00	cover	/RL	1	
	01C	satin black			
32	900 012 053 00	straight pin 6 X 36		1	
33	964 538 101 00	housing	/LL	1	
	01C	satin black			
(33)	964 538 102 01	housing	/RL	1	
	01C	satin black			

Pos	Part Number	Name	Remarks	Qty	Model
34	999 119 018 02	pan-head screw M 6 X 15		2	
35	900 223 003 02	washer A 6,4		2	
36	900 309 009 00	roll pin 4 X 18		1	
37	964 538 703 01	handle		1	COUPE
	01C	satin black			
38	993 538 971 00	handle with 2 secondary keys key cap w/o stipulated lock number		1	TARGA/CABRIO
38	993 538 971 01	handle with 2 secondary keys key cap state lock number		1	TARGA/CABRIO
39	911 538 902 00	replacement key state lock number		1	
-	964 612 328 00	grommet for lid-release cable		1	

- -- E N D -- -

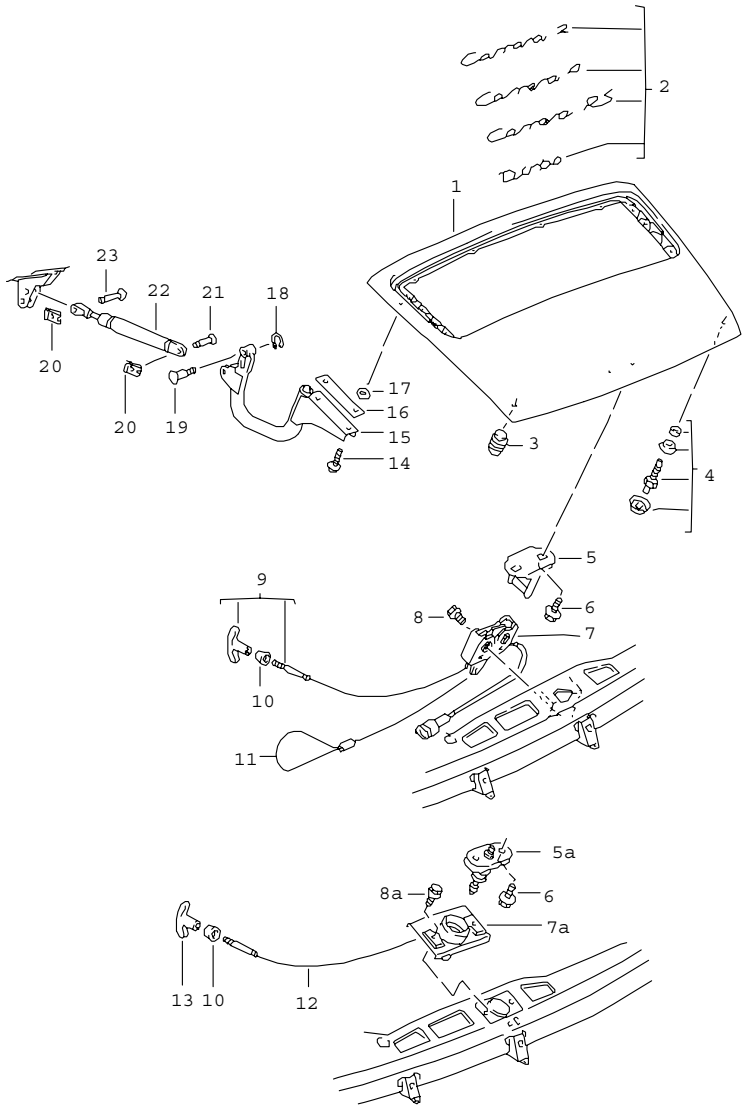

Pos	Part Number	Name	Remarks	Qty	Model
		cover rear			
(1)	964 512 010 01	cover		1	CARRERA 2/4/ TURBO-LOOK
(1)	964 512 010 02	cover		1	CARRERA RS
(1)	965 512 010 01	cover		1	TURBO
2	-	logo see group 8/10/00		.	
3	999 703 036 50	rubber stop		2	
4	-	contact switch for engine compartment lamp see group 9/03/06		.	
5	965 512 051 01	lock upper part		1	
5A	930 512 052 00	lock upper part		1	
6	900 075 357 02	screw M 6 X 12		2	
(7)	965 512 052 00	lock lower part		1	
7	965 512 052 01	lock lower part with microswitch		1	
7A	901 512 052 00	lock lower part		1	
8	900 075 418 02	screw M 6 X 35		2	
8A	900 075 357 02	screw M 6 X 12		2	
9	993 512 063 00	lid-release cable	91-	1	
10	911 512 531 00	grommet		1	
11	964 512 521 00	emergency operation		1	
12	901 511 073 20	lid-release cable	-90	1	
13	901 552 813 20	handle		1	
14	900 067 273 09	screw M 6 X 16		4	

Pos	Part Number	Name	Remarks	Qty	Model
15	964 512 023 02	hinge		2	CARRERA 2/4/ CARRERA RS/ TURBO-LOOK
(15)	965 512 019 00	hinge	/L	1	TURBO
(15)	965 512 020 00	hinge	/R	1	TURBO
16	993 512 469 00	desk pad		2	
17	999 025 090 02	washer 6,5 X 14 X 2	/R	1	
18	999 166 008 02	safety clip		2	
19	964 512 326 00	hinge bolt		2	
20	N 012 645 2	lock		4	
21	999 166 010 02	bolt		2	
22	911 512 331 01	gas-filled strut		2	CARRERA 2/4/ CARRERA RS/ TURBO-LOOK
(22)	911 512 331 02	gas-filled strut		2	TURBO
23	999 166 043 02	bolt		2	
		- -- E N D -- -			

Pos	Part Number	Name	Remarks	Qty	Model

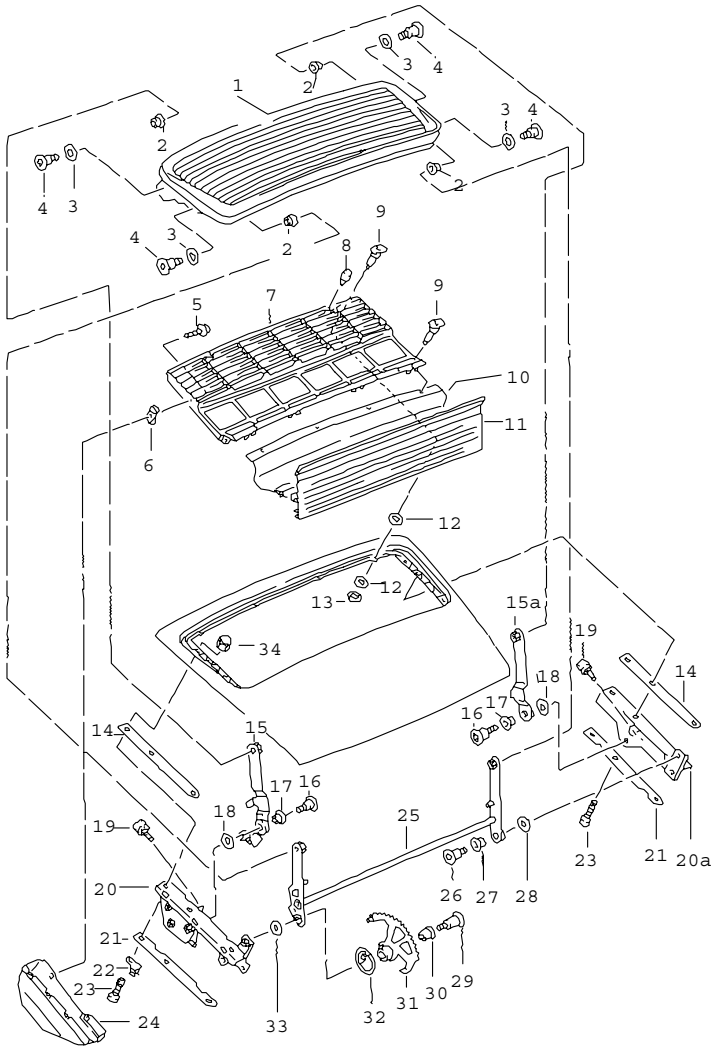

Pos	Part Number	Name	Remarks	Qty	Model
		rear spoiler			CARRERA 2/4/ CARRERA RS/ TURBO-LOOK
1	964 512 017 00	rear spoiler with grille		1	
2	964 512 732 00	bearing sleeve		4	
3	964 512 751 00	washer		4	
4	964 512 722 00	screw micro-self-locking M 6 X 23		4	
5	999 073 122 09	tapping screw B 4,2 X 9,5		2	
6	999 591 723 02	speed nut B 4,2		2	
7	964 512 333 00	ventilation grille		1	
	01C	satin black			
8	964 512 531 01	stop rear spoiler		4	
9	999 088 025 40	t-headed screw	-91	8	
9	999 088 025 40	t-headed screw	92-	8	
10	A 964 512 081 01	seal		1	
10	964 512 081 02	seal		1	
11	993 512 121 00	rear wall		1	
12	999 025 209 40	washer 9 X 15 X 2		16	
13	999 591 974 02	clamping washer		8	
14	964 512 467 00	desk pad		X	
15	964 512 049 00	lever	/L	1	
15A	964 512 050 00	lever	/R	1	
16	964 512 721 00	screw micro-self-locking		2	
17	964 512 711 00	bearing sleeve		2	
18	964 512 741 00	washer		2	

Pos	Part Number	Name	Remarks	Qty	Model
19	999 703 363 40	buffer		2	
20	964 512 211 00	plate	/L	1	
20A	964 512 212 00	plate	/R	1	
21	964 512 461 00	desk pad		2	
22	964 612 138 00	cable holder		1	
23	900 119 064 02	pan-head screw M 6 X 15		6	
24	A 964 512 225 00	cover	-91	1	
	70B	black			
24	964 512 225 00	cover		1	
	01C	satin black			
25	964 512 110 00	linkage		1	
26	964 512 723 00	screw micro-self-locking M 6 X 17		1	
27	964 512 711 00	bearing sleeve		1	
28	964 512 742 00	washer		1	
29	964 512 381 00	screw micro-self-locking M 6 X 27		1	
30	964 512 361 00	bearing sleeve		1	
31	964 512 111 00	segment tooth sector		1	
32	964 512 314 00	torsion spring		1	
33	964 512 371 00	washer		1	
34	999 703 449 40	protection cap		6	
		- -- E N D -- -			

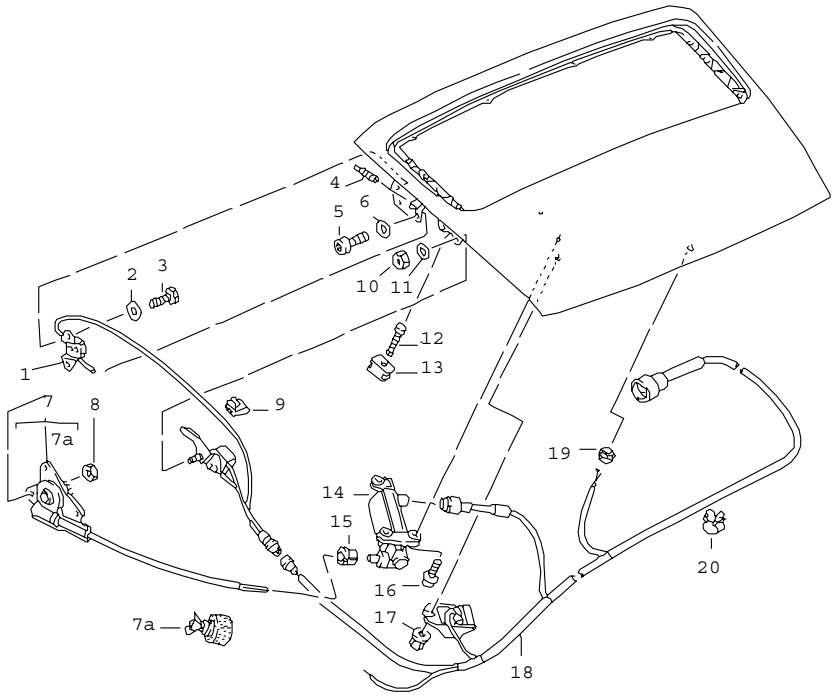

Pos	Part Number	Name	Remarks	Qty	Model
		rear spoiler driving mechanism			CARRERA 2/4/ CARRERA RS/ TURBO-LOOK
1	964 613 107 01	microswitch		1	
2	900 025 003 02	washer A 5,3		2	
3	N 010 205 6	hexagon-head bolt M 5 X 10		2	
4	999 224 001 02	threaded pin M 4 X 16		1	
5	N 014 701 7	pan-head screw micro-self-locking M 6 X 12		3	
6	N 011 524 7	washer A 6,4		3	
7	964 624 121 00	transmission		1	
7A	964 624 122 00	cap		1	
8	N 011 116 5	hexagon nut M 6		3	
9	999 651 152 02	cable clamp		2	
10	N 011 005 14	hexagon nut M 5		1	
11	900 025 003 02	washer A 5,3		1	
12	964 613 323 00	threaded pin		1	
13	964 613 313 00	nut		1	
14	964 624 111 00	geared motor		1	
15	964 624 165 00	bush		1	
16	900 067 294 02	screw M 6 X 18		3	
17	999 049 022 40	plastic nut		1	
18	-	wiring harness see group 9/02/18			
19	477 971 909	rubber sleeve		1	
20	477 971 851	cable clip		12	

Pos	Part Number	Name	Remarks	Qty	Model	Pos	Part Number	Name	Remarks	Qty	Model
		- -- E N D -- -									

Model	Year	MG	SG	Illustration	Restrictions	Update	18:01	24.11.2005	PORSCHE PET PORSCHE
964	94	8	03	803-20		194			

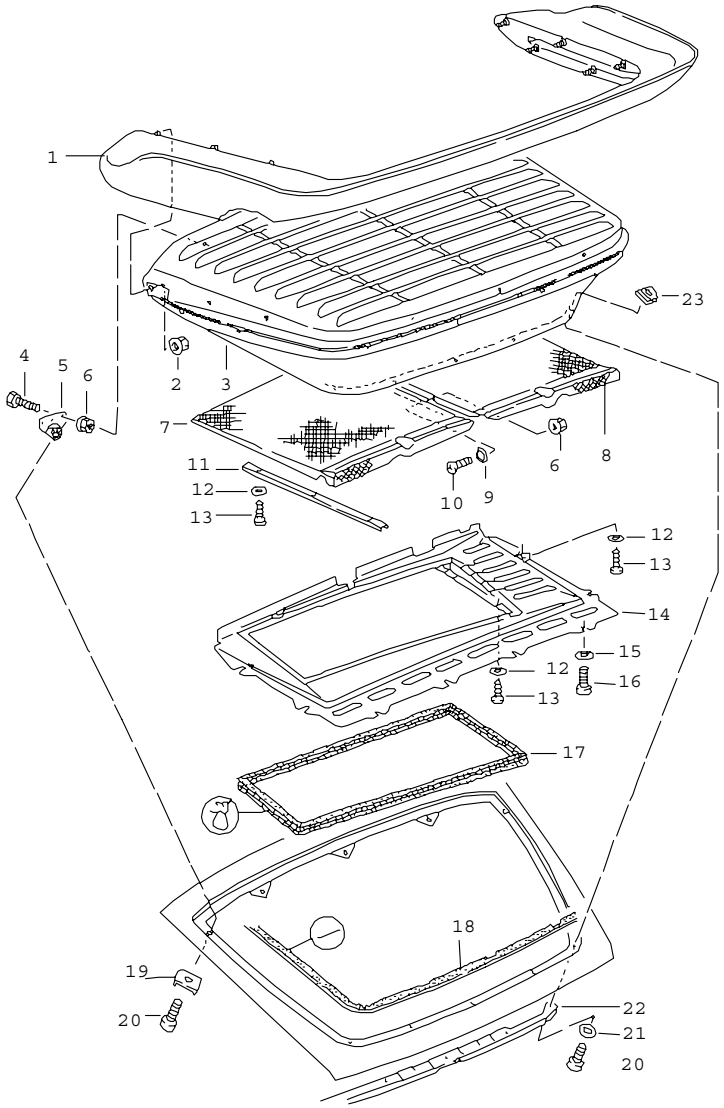

Pos	Part Number	Name	Remarks	Qty	Model
		rear spoiler			TURBO
1	965 512 021 00	polyuret. rim for spoiler		1	
	01C	satin black			
2	999 084 075 02	lock nut M 6		17	
3	965 599 512 00	bracket		1	
4	N 040 226 2	hexagon-head bolt M 4 X 15		10	
5	930 512 257 00	angle left		1	
(5)	930 512 258 00	angle right		1	
(5)	930 512 253 01	angle centre		3	
6	999 084 076 02	lock nut M 4		12	
7	930 512 031 00	grille	/L	1	
8	930 512 032 00	grille	/R	1	
9	999 591 102 17	washer		2	
10	900 269 043 02	countersunk-head screw M 4 X 12		2	
11	930 512 175 00	angular plate		1	
12	N 011 663 1	washer A 3,7		7	
13	999 919 101 02	oval-head sheetmetal screw B 3,5 X 8		7	
14	965 512 241 00	air duct		1	
15	N 011 666 7	washer A 6,4		9	
16	N 014 765 2	pan-head screw M 6 X 10		6	
17	A 965 504 211 00	gasket		1	
17	965 504 211 01	gasket		1	
18	930 512 215 00	piping		1	
19	965 512 775 00	desk pad		2	

Pos	Part Number	Name	Remarks	Qty	Model	Pos	Part Number	Name	Remarks	Qty	Model
20	900 119 091 02	pan-head screw M 6 X 15		10							
21	N 011 524 7	washer A 6,4		5							
22	930 512 281 00	rail		1							
23	999 507 328 02	captive nut M 6		5							
		- -- E N D -- -									

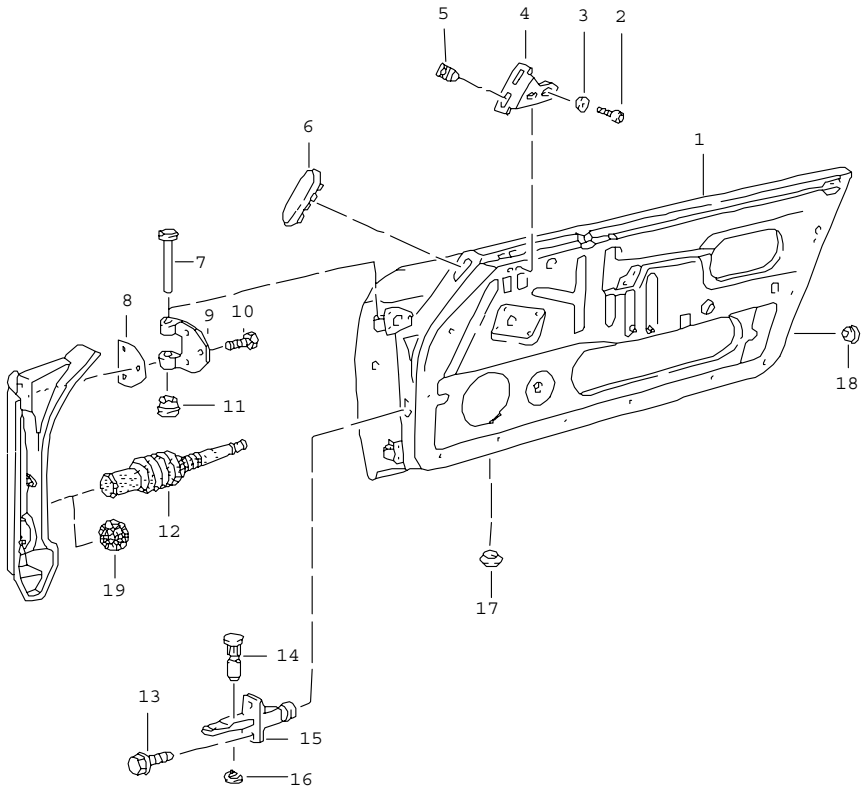

Pos	Part Number	Name	Remarks	Qty	Model
		door in white			
(1)	964 531 005 00	door in white	/LL/L	1	
	GRV	prime coated			
1	964 531 006 00	door in white	/LL/R	1	
	GRV	prime coated			
(1)	964 531 005 03	door in white	/RL/L	1	
	GRV	prime coated			
(1)	964 531 006 03	door in white	/RL/R	1	
	GRV	prime coated			
(1)	964 531 005 10	door in white	/LL/L	1	SPEEDSTER
	GRV	prime coated			
(1)	964 531 006 10	door in white	/LL/R	1	SPEEDSTER
	GRV	prime coated			
(1)	964 531 005 11	door in white	/RL/L	1	SPEEDSTER
	GRV	prime coated			
(1)	964 531 006 11	door in white	/RL/R	1	SPEEDSTER
	GRV	prime coated			
2	900 119 064 02	pan-head screw M 6 X 15		4	
3	N 011 524 7	washer A 6,4		4	
(4)	911 555 821 00	bracket	/L	1	
4	911 555 822 00	bracket for mount cover strip	/R	1	
5	999 591 498 40	special nut		4	
6	999 703 345 40	cap oval		4	
7	901 531 305 20	pin for door hinge		4	
8	901 531 391 20	desk pad		4	
9	901 531 303 21	hinge arm		4	

Pos	Part Number	Name	Remarks	Qty	Model
10	999 093 010 02	hexagon-head bolt M 8 X 20		12	
11	901 531 311 20	bush		4	
12	964 612 334 00	rubber sleeve for wiring harness		2	
13	900 075 374 02	screw M 6 X 14		4	
14	911 531 275 00	bolt		2	
15	964 537 057 00	door arrester		2	
(15)	911 531 057 04	door arrester		2	SPEEDSTER
16	999 166 008 02	safety clip		2	
17	999 926 018 40	valve		2	
18	999 703 344 40	cap round		2	
19	927 631 224 01	grommet		2	CARRERA RS
		- -- E N D -- -			

Pos	Part Number	Name	Remarks	Qty	Model

Model	Year	MG	SG	Illustration	Restrictions	Update	18:02	24.11.2005	PORSCHE PET PORSCHE
964	94	8	04	804-02		194			

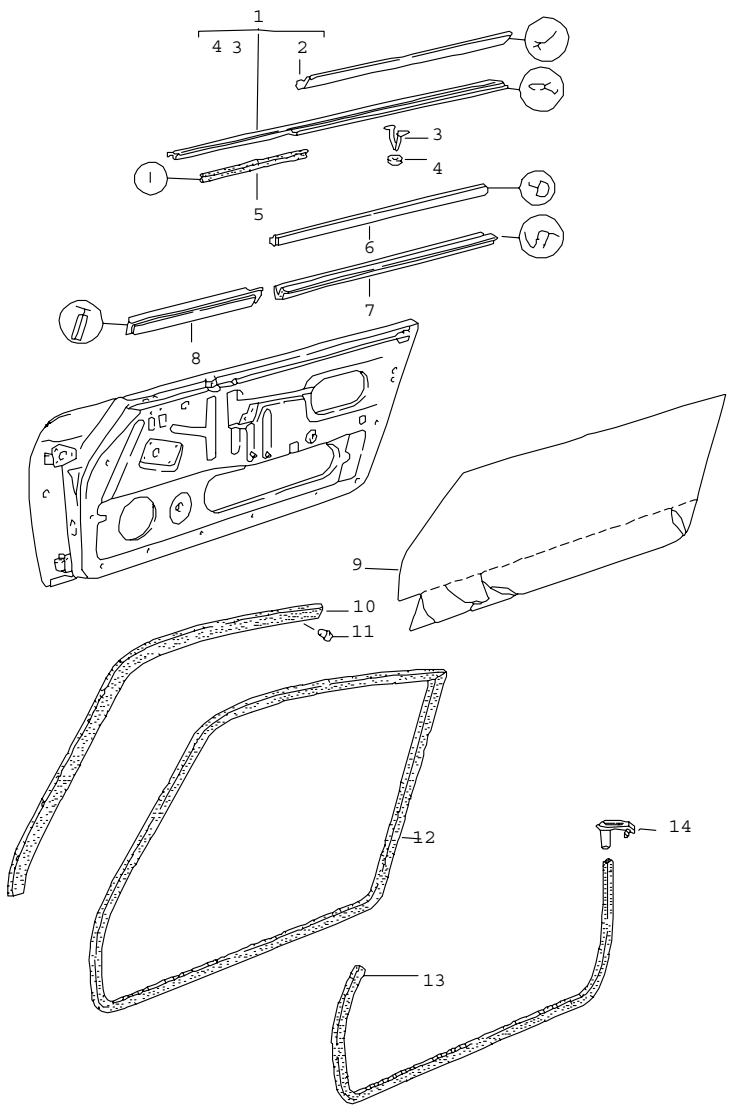

Pos	Part Number	Name	Remarks	Qty	Model
		seal doors			COUPE/TARGA/ CABRIO
(1)	911 531 041 30	moulding	/L	1	COUPE
	70K	black			
1	911 531 042 30	moulding	/R	1	COUPE
	70K	black			
(1)	911 531 041 50	moulding	/L	1	TARGA/CABRIO
	70K	black			
(1)	911 531 042 50	moulding	/R	1	TARGA/CABRIO
	70K	black			
(1)	911 531 041 60	moulding	/L	1	CABRIO M 070
	70K	black			
(1)	911 531 042 60	moulding	/R	1	CABRIO M 070
	70K	black			
(2)	911 531 931 02	sealing	/L	1	COUPE
2	911 531 932 02	sealing	/R	1	COUPE
(2)	911 531 931 42	sealing	/L	1	TARGA/CABRIO
(2)	911 531 932 42	sealing outer	/R	1	TARGA/CABRIO
3	999 591 326 02	moulding clip		14	
4	911 531 309 00	ring		14	
5	901 531 933 20	sealing		2	
(6)	901 531 935 20	sealing for door slot	/L -91	1	COUPE
6	901 531 936 20	sealing for door slot	/R -91	1	COUPE
(6)	911 531 295 40	sealing for door slot	/L	1	TARGA/CABRIO
(6)	911 531 296 40	sealing for door slot outer	/R	1	TARGA/CABRIO
7	911 531 951 01	sealing for door slot inner		2	
(8)	911 531 297 00	piping F >>96LS4 02212		2	COUPE COUPE
	01C	satin black			

Pos	Part Number	Name	Remarks	Qty	Model
(8)	911 531 297 01	piping F 96LS4 02213>> F 96MS4 70061>> F 96NS4 90061>>	/L	1	COUPE COUPE COUPE COUPE
	01C	satin black			
8	911 531 298 00	piping F 96LS4 02213>> F 96MS4 70061>> F 96NS4 90061>>	/R	1	COUPE COUPE COUPE COUPE
	01C	satin black			
(8)	911 531 297 40	piping F >>96LS4 10121 F >>96LS4 20539		2	TARGA/CABRIO TARGA CABRIO
	01C	satin black			
(8)	911 531 297 01	piping F 96LS4 10122>> F 96LS4 20540>>	/L	1	TARGA/CABRIO TARGA CABRIO
	01C	satin black			
(8)	911 531 298 00	piping F 96LS4 10122>> F 96LS4 20540>>	/R	1	TARGA/CABRIO TARGA CABRIO
	01C	satin black			
(9)	911 531 889 00	seal	/L	1	
9	911 531 890 00	seal	/R	1	
(10)	911 542 403 03	sealing rail	/L	1	COUPE
10	911 542 404 03	sealing rail	/R	1	COUPE
11	999 190 204 00	rivet 3,2 X 8		26	
12	911 531 095 02	door sealing		2	COUPE
(13)	911 531 095 40	door sealing	/L	1	TARGA/CABRIO
13	911 531 096 40	door sealing	/R	1	TARGA/CABRIO
14	911 531 523 65	cap		2	CABRIO
		- -- E N D -- -			

Pos	Part Number	Name	Remarks	Qty	Model

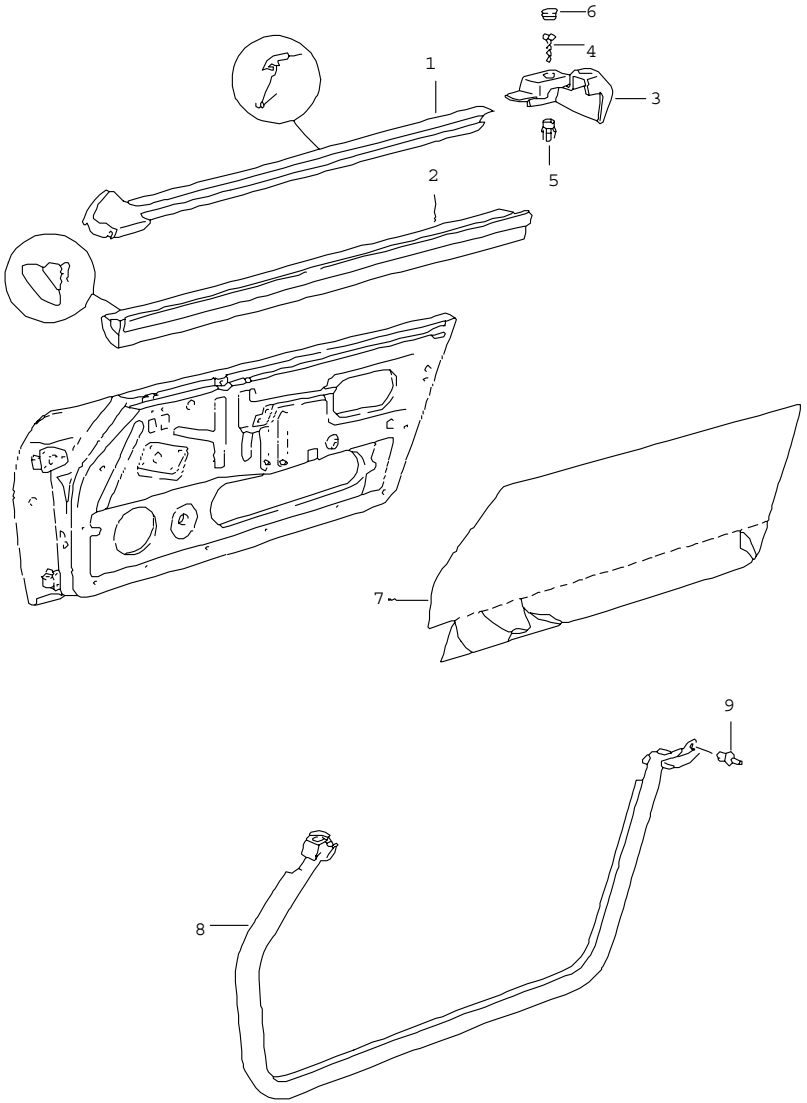

Pos	Part Number	Name	Remarks	Qty	Model
		seal doors			SPEEDSTER
(1)	964 531 279 00	sealing for door slot	/L	1	
1	964 531 280 00	sealing for door slot outer	/R	1	
(2)	U 964 531 391 01	sealing for door slot	/L	1	
2	U 964 531 392 01	sealing for door slot	/R	1	
(2)	964 531 391 01	sealing for door slot	/L	1	
2	964 531 392 01	sealing for door slot inner	/R	1	
(3)	964 531 821 00	terminal piece	/L	1	
	01C	satin black			
3	964 531 822 00	terminal piece	/R	1	
	01C	satin black			
4	N 013 961 2	tapping screw B 3,9 X 13		2	
5	999 591 934 40	expander nut		2	
6	999 703 367 40	plug 10,5 X 11,8		2	
(7)	911 531 889 00	seal	/L	1	
7	911 531 890 00	seal	/R	1	
(8)	964 531 095 01	door seal	/L	1	
8	964 531 096 01	door seal	/R	1	
9	999 591 551 40	expansion rivet 3,5 X 7,0		4	
		- -- E N D -- -			

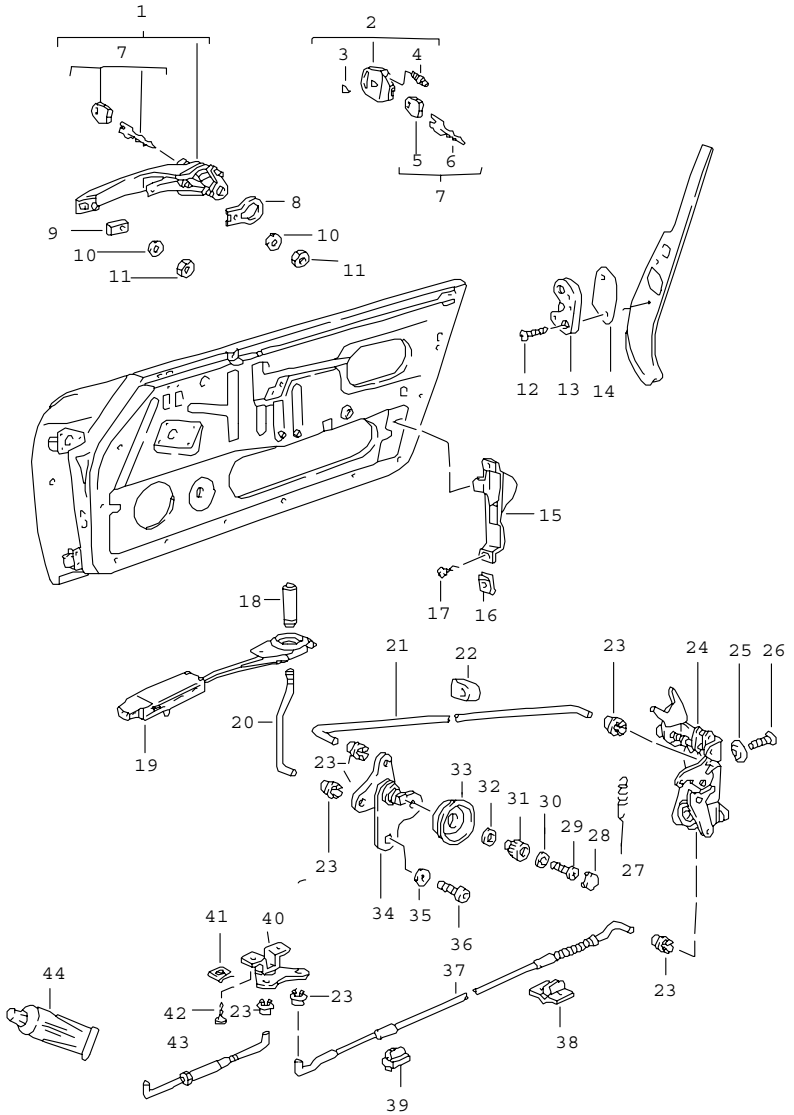

Pos	Part Number	Name	Remarks	Qty	Model
		door latch			
(1)	911 538 941 07	outer door handle with lock cylinder with 2 secondary keys key cap w/o stipulated lock number	/L	1	
(1)	911 538 941 06	outer door handle with lock cylinder with 2 secondary keys key cap state lock number	/L	1	
1	911 538 942 07	outer door handle with lock cylinder with 2 secondary keys key cap w/o stipulated lock number	/R	1	
1	911 538 942 06	outer door handle with lock cylinder with 2 secondary keys key cap state lock number	/R	1	
2	944 538 041 00	key lamp complete		1	
3	944 538 443 00	emblem		2	
4	928 537 630 02	bulb		1	
5	944 538 431 00	key cap		1	
6	911 538 903 00	blank key		1	
7	911 538 902 00	replacement key key cap state lock number		1	
8	911 531 632 00	desk pad		2	
9	911 531 631 00	desk pad		2	
10	900 025 003 02	washer A 5,3		4	
11	900 910 008 02	lock nut M 5		4	
12	999 219 008 07	countersunk-head screw micro-self-locking M 8 X 40		4	
(13)	993 531 029 00	door lock striker	/L	1	
13	993 531 030 00	door lock striker	/R	1	

Pos	Part Number	Name	Remarks	Qty	Model
(14)	901 531 703 23	desk pad	/L	1	
14	901 531 703 24	desk pad	/R	1	
15	-	cover for element central locking system see group 8/04/06		1	
(15)	911 537 335 00	cover for door lock	/L	1	
15	911 537 336 00	cover for door lock	/R	1	
16	N 015 438 1	speed nut B 3,5		4	
17	900 144 028 07	tapping screw B 3,5 X 13		4	
18	928 637 138 00	push button		2	C.2/4/
	01C	satin black with diode			C.RS: M 002/ TURBO/ TURBO-LOOK
(18)	928 555 359 02	knob		2	CARRERA RS
19	911 637 137 00	coil	-90	2	
(19)	964 637 237 00	coil	91-	2	
(20)	911 531 707 01	rod for push-button	/L	1	CARRERA RS
(20)	911 531 708 01	rod for push-button	/R	1	CARRERA RS
(20)	911 531 707 02	rod for push-button	/L	1	C.2/4/ C.RS: M 002/ TURBO/ TURBO-LOOK
20	911 531 708 02	rod for push-button	/R	1	C.2/4/ C.RS: M 002/ TURBO/ TURBO-LOOK
21	911 531 562 01	connecting rod		2	
22	911 531 565 00	rubber mounting		2	
(22)	911 531 599 00	rubber washer		4	
23	993 531 563 00	linkage clip		12	

Pos	Part Number	Name	Remarks	Qty	Model
(24)	964 531 053 03	door lock with antishutout-mechanism	/LL/L	1	C.2/4/ C.RS: M 002/ TURBO/ TURBO-LOOK
24	964 531 054 02	door lock without antishutout mechan	/LL/R	1	C.2/4/ C.RS: M 002/ TURBO/ TURBO-LOOK
(24)	964 531 053 02	door lock without antishutout mechan	/RL/L	1	C.2/4/ C.RS: M 002/ TURBO/ TURBO-LOOK
(24)	964 531 054 03	door lock with antishutout-mechanism	/RL/R	1	C.2/4/ C.RS: M 002/ TURBO/ TURBO-LOOK
(24)	964 531 053 01	door lock with antishutout-mechanism	/LL/L	1	CARRERA RS
(24)	964 531 054 00	door lock without antishutout mechan	/LL/R	1	CARRERA RS
(24)	964 531 053 01	door lock with antishutout-mechanism	/LL/L	1	SPEEDSTER
(24)	964 531 054 00	door lock without antishutout mechan	/LL/R	1	SPEEDSTER
(24)	964 531 053 00	door lock without antishutout mechan	/RL/L	1	CARRERA RS/ SPEEDSTER
(24)	964 531 054 01	door lock with antishutout-mechanism	/RL/R	1	CARRERA RS/ SPEEDSTER
25	999 591 118 02	cone washer		6	
26	999 219 009 00	countersunk-head screw micro-self-locking M 6 X 16		6	
27	993 531 165 00	tension spring		2	
28	911 531 703 00	cap		2	
29	999 218 010 02	oval-head screw micro-self-locking M 5 X 12		2	
30	900 116 005 02	lock washer		2	
31	928 537 581 03	rotary knob		2	
32	911 531 705 00	spacer ring		2	

Pos	Part Number	Name	Remarks	Qty	Model
33	928 537 585 02	bearing shell		2	
(34)	911 531 075 02	mounting for push-button	/L	1	
34	911 531 076 02	mounting for push-button	/R	1	
35	N 012 226 5	spring washer B 6		4	
36	900 186 147 02	pan-head screw M 6 X 10		4	
37	911 531 509 01	bowden cable		2	
38	911 531 099 00	support		2	
39	911 531 097 00	support		2	
(40)	993 531 083 00	relay lever	/L	1	
40	993 531 084 00	relay lever	/R	1	
41	999 507 009 02	speed nut B 3,5		4	
42	N 014 086 4	tapping screw B 3,5 X 13		4	
43	911 531 091 01	pull rod		2	
44	000 043 204 21	grease for lock cylinder		X	
		- -- E N D -- -			

Pos	Part Number	Name	Remarks	Qty	Model

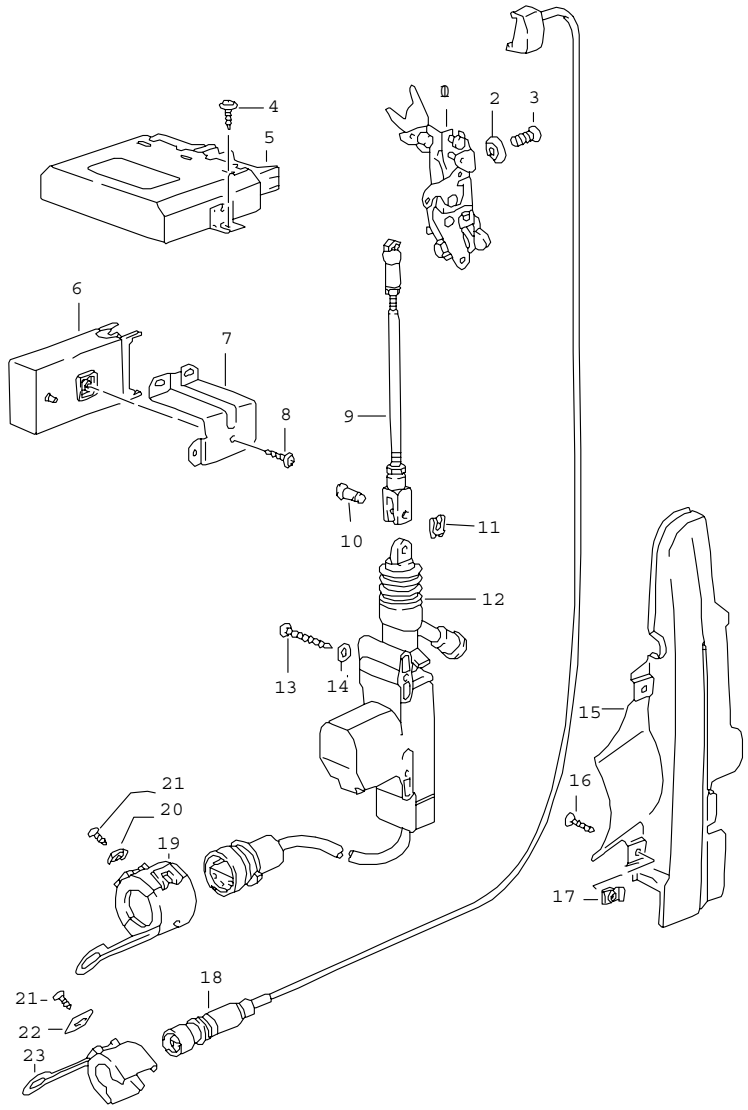

Pos	Part Number	Name	Remarks	Qty	Model
		central locking system			
1-3	-	see group 8/04/04			
4	900 143 117 02	combination tapping screw B 4,2 X 9,5		2	
5	928 618 260 00	control unit	91-	1	
6	911 618 113 01	control unit	-90	1	
7	911 618 229 02	support	-90	1	
8	999 919 032 02	oval-head screw		1	
9	964 537 571 00	operating rod		2	
10	N 100 438 01	bolt		2	
11	N 012 644 1	lock		2	
12	944 624 211 00	element	-90	1	
(12)	928 624 211 00	element	91-	1	
13	999 141 018 02	half-round screw		2	
14	900 151 001 02	washer A 4,3		2	
15	911 537 355 00	cover	/L	1	
(15)	911 537 356 00	cover	/R	1	
16	900 144 028 07	tapping screw B 3,5 X 13		6	
17	N 015 438 1	speed nut B 3,5		6	
18	964 613 134 00	microswitch		2	
-	911 531 621 00	cable holder		2	
-	900 278 001 00	countersunk-head screw M 2,5 X 6		2	
19	944 612 450 01	support	-90	2	
20	999 591 711 02	speed nut	-90	2	
21	N 013 956 7	tapping screw B 3,5 X 6,5		2	
22	999 591 351 02	speed nut		2	
23	944 612 420 00	locking device		2	

Pos	Part Number	Name	Remarks	Qty	Model	Pos	Part Number	Name	Remarks	Qty	Model
-	944 612 555 00	cable holder		4							
		- -- E N D -- -									

Model	Year	MG	SG	Illustration	Restrictions	Update	18:03	24.11.2005	PORSCHE PET PORSCHE
964	94	8	04	804-10		194			

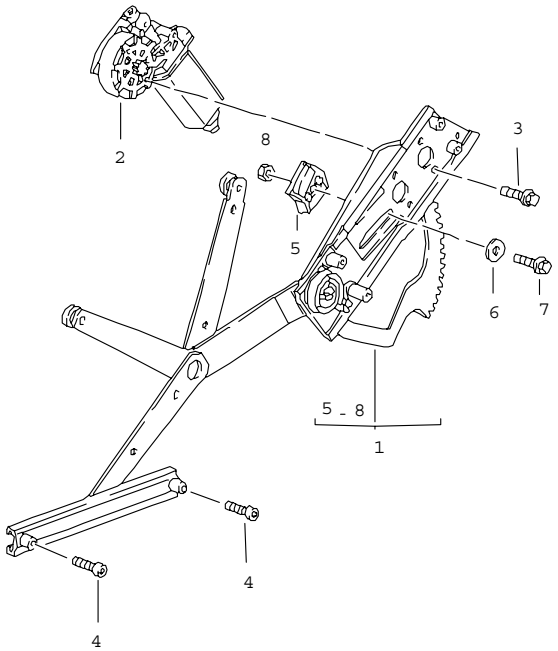

Pos	Part Number	Name	Remarks	Qty	Model
		power windows electric			CARRERA 2/4/ RS:M002/ TURBO/ TURBO-LOOK
1	911 542 935 46	cross-arm	/L	1	
(1)	911 542 936 46	cross-arm	/R	1	
2	A 911 624 015 43	motor	/L -92	1	
(2)	A 911 624 014 43	motor	/R -92	1	
2	911 624 015 43	motor	/L	1	
(2)	911 624 014 43	motor	/R	1	
3	999 919 073 02	screw 53 X 28/20		6	
4	999 218 016 02	screw micro-self-locking M 6 X 16		12	
5	911 542 231 41	stop	/L	1	
(5)	911 542 232 41	stop	/R	1	
7	999 217 043 08	hexagon-head bolt M 8 X 16		2	
8	900 910 003 02	lock nut M 8		2	
		- -- E N D -- -			

Model	Year	MG	SG	Illustration	Restrictions	Update	18:03	24.11.2005	PORSCHE PET PORSCHE
964	94	8	04	804-11		194			

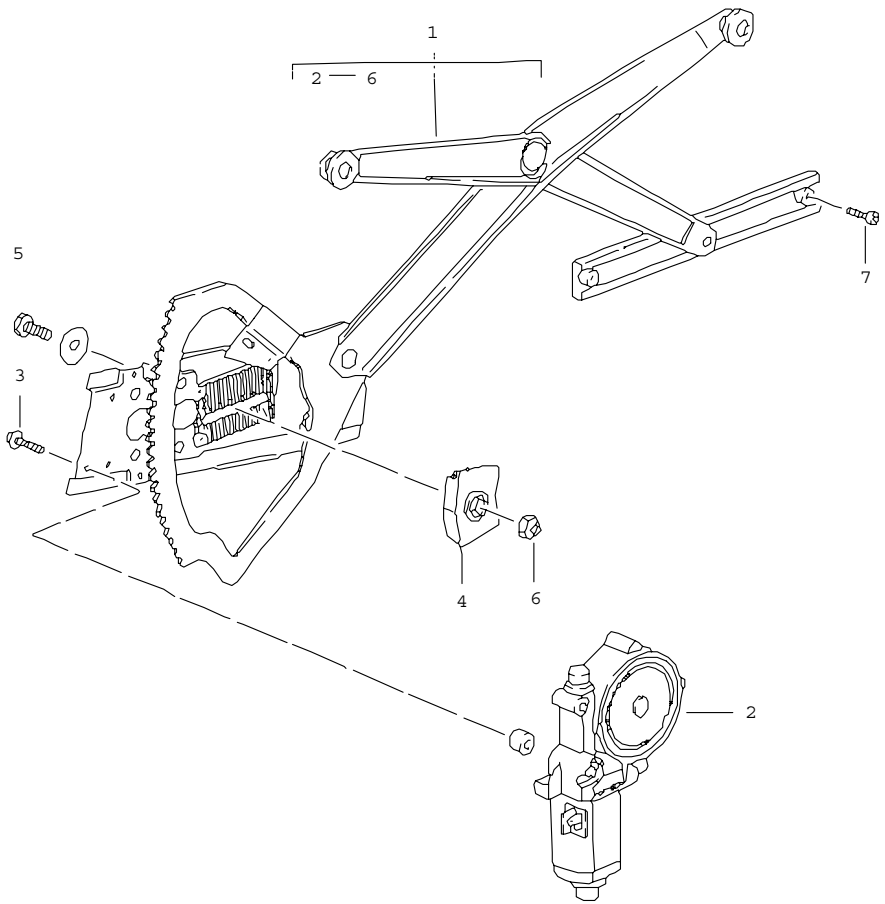

Pos	Part Number	Name	Remarks	Qty	Model
		power windows electric			SPEEDSTER
1	964 542 003 00	power windows	/L	1	
(1)	964 542 004 00	power windows	/R	1	
2	911 624 015 43	motor	/L	1	
(2)	911 624 014 43	motor	/R	1	
3	999 919 073 02	screw 53 X 28/20		6	
4	911 542 231 41	stop	/L	1	
(4)	911 542 232 41	stop M 8	/R	1	
5	999 217 043 08	hexagon-head bolt M 8 X 16		2	
6	900 910 003 02	lock nut M 8		2	
7	999 218 016 02	screw micro-self-locking M 6 X 16		4	
		- -- E N D -- -			

Model	Year	MG	SG	Illustration	Restrictions	Update	18:03	24.11.2005	PORSCHE PET PORSCHE
964	94	8	04	804-12		194			

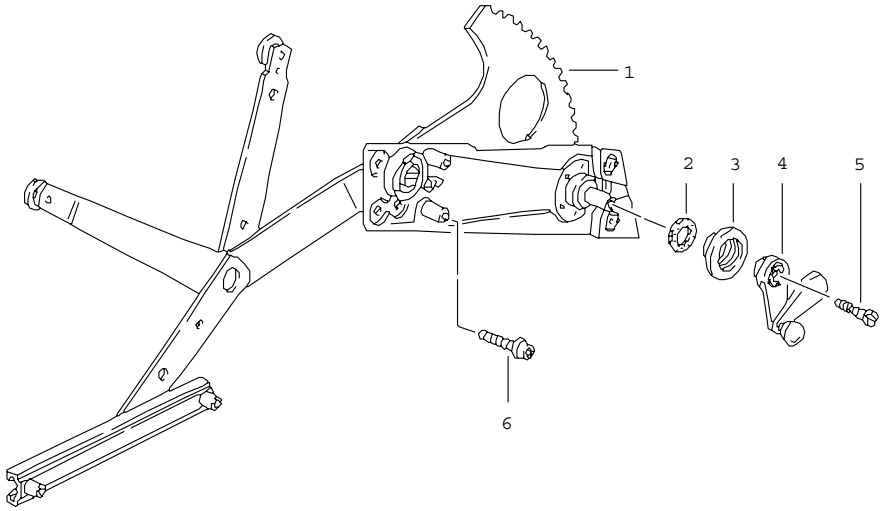

Pos	Part Number	Name	Remarks	Qty	Model
		power windows manual			CARRERA RS
(1)	964 542 041 00	power windows	/L	1	
1	964 542 042 00	power windows	/R	1	
2	901 542 495 20	sealing ring		2	
3	901 552 891 20	rose		2	
4	959 542 115 01	window crank		2	
	3DL	black			
5	911 542 475 00	conical screw M 5 X 20		2	
6	999 218 016 02	screw micro-self-locking M 6 X 16		12	
		- -- E N D -- -			

Model	Year	MG	SG	Illustration	Restrictions	Update	18:03	24.11.2005	PORSCHE PET PORSCHE
964	94	8	04	804-15		194			

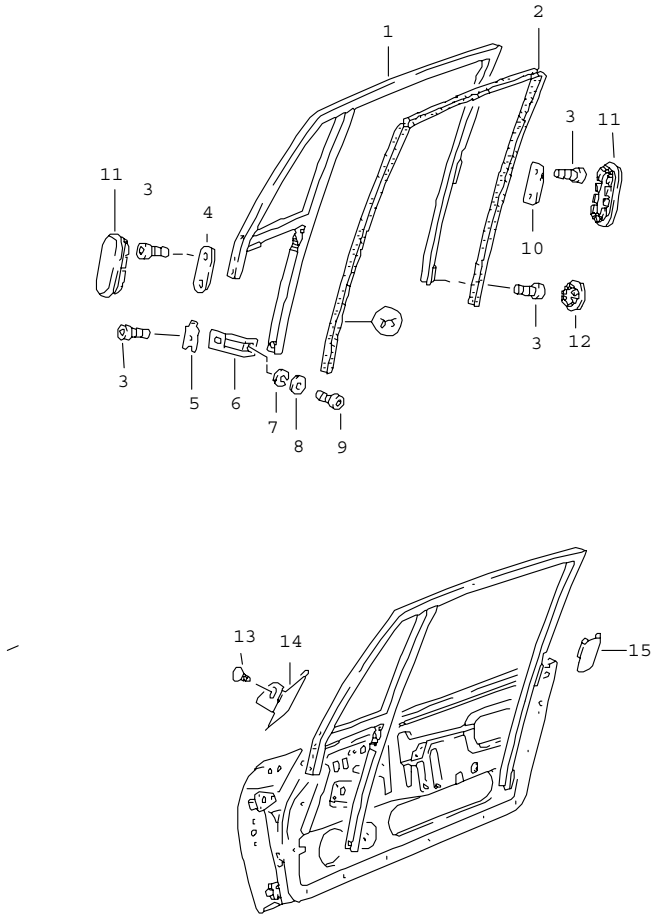

Pos	Part Number	Name	Remarks	Qty	Model
		door glass frame			COUPE
1	911 542 029 02	door glass frame	/L	1	
	70K	black			
1	911 542 030 02	door glass frame	/R	1	
	70K	black			
2	911 542 905 00	window guide		2	
3	999 218 045 07	pan-head screw M 8 X 16 micro-self-locking		12	
4	911 542 236 00	plate		2	
5	901 542 252 25	desk pad		2	
6	911 542 061 00	retaining bracket		2	
7	N 012 006 4	lock ring		2	
8	N 011 666 7	washer A 6,4		2	
9	999 218 015 02	pan-head screw M 6 X 12 micro-self-locking		2	
10	911 542 237 00	plate		2	
11	999 703 345 40	cap oval		4	
12	999 703 344 40	cap round		2	
13	999 703 366 40	plug		2	
(14)	911 531 711 02	joint rubber	/V/L	1	
	01C	satin black			
14	911 531 712 02	joint rubber	/V/R	1	
	01C	satin black			
(15)	911 531 713 01	joint rubber	/H/L	1	
	01C	satin black			
15	911 531 714 01	joint rubber	/H/R	1	
	01C	satin black			
		- -- E N D -- -			

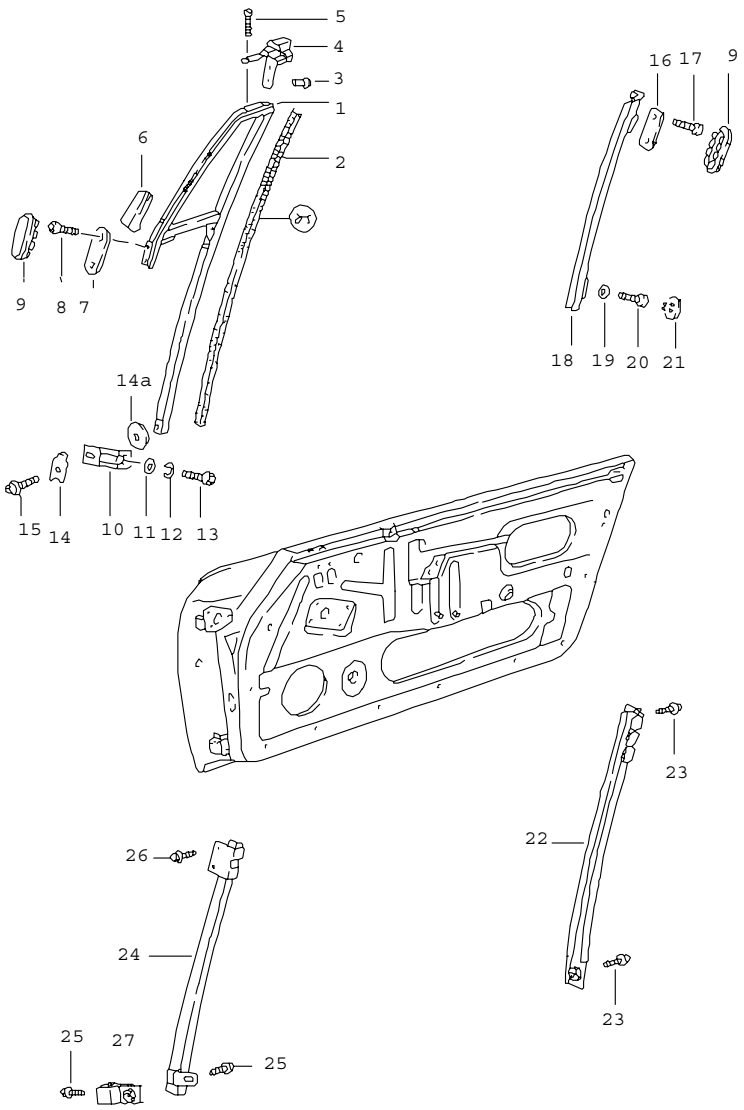

Pos	Part Number	Name	Remarks	Qty	Model
		door glass frame			TARGA/CABRIO SPEEDSTER
(1)	911 542 019 43	door glass frame	/L	1	TARGA/CABRIO
	70K	black			
1	911 542 020 43	door glass frame	/R	1	TARGA/CABRIO
	70K	black			
2	911 542 505 40	window guide		1	TARGA/CABRIO
3	900 056 003 20	rivet		4	TARGA/CABRIO
(4)	911 542 065 41	frame connection	/L	1	TARGA/CABRIO
4	911 542 066 41	frame connection	/R	1	TARGA/CABRIO
5	900 270 050 07	countersunk-head screw M 5 X 8		4	TARGA/CABRIO
5	900 270 051 00	countersunk-head screw M 4 X 8		4	TARGA/CABRIO
(6)	911 531 711 41	joint rubber	/L	1	TARGA/CABRIO
	01C	satin black			
6	911 531 712 41	joint rubber	/R	1	TARGA/CABRIO
	01C	satin black			
7	911 542 236 40	plate		2	TARGA/CABRIO
8	999 218 015 02	pan-head screw M 6 X 12		4	TARGA/CABRIO
9	999 703 345 40	cap oval		4	
10	911 542 061 00	retaining bracket		2	TARGA/CABRIO
11	N 011 666 7	washer A 6,4		2	TARGA/CABRIO
12	N 012 006 4	lock ring		2	TARGA/CABRIO
13	999 218 015 02	pan-head screw		2	TARGA/CABRIO
14	W 901 542 252 20	desk pad		2	TARGA/CABRIO
14	901 542 252 25	desk pad		2	TARGA/CABRIO
14A	900 151 026 02	washer B 10,5		2	TARGA/CABRIO

Pos	Part Number	Name	Remarks	Qty	Model
(15)	W 999 218 015 02	pan-head screw M 6 X 12		2	TARGA/CABRIO
15	999 218 016 02	screw M 6 X 16		2	TARGA/CABRIO
16	911 542 237 40	plate		2	TARGA/CABRIO
17	900 119 035 02	pan-head screw M 6 X 8		4	TARGA/CABRIO
(18)	964 542 035 40	guide	/L	1	TARGA/CABRIO
	70K	black			
18	964 542 036 40	guide	/R	1	TARGA/CABRIO
	70K	black			
19	N 011 550 1	washer A 6,5		2	TARGA/CABRIO
20	900 119 035 02	pan-head screw M 6 X 8		2	TARGA/CABRIO
21	999 703 344 40	cap round		2	
(22)	911 542 035 42	guide	/L	1	SPEEDSTER
22	911 542 036 42	guide	/R	1	SPEEDSTER
23	900 067 287 02	screw M 6 X 12		4	SPEEDSTER
(24)	964 542 245 00	guide	/L	1	SPEEDSTER
24	964 542 246 00	guide	/R	1	SPEEDSTER
25	900 067 240 02	screw M 6 X 12		4	SPEEDSTER
26	900 067 287 02	screw M 6 X 12		2	SPEEDSTER
27	911 542 537 00	retaining bracket		2	SPEEDSTER
		- -- E N D -- -			

Pos	Part Number	Name	Remarks	Qty	Model

Model	Year	MG	SG	Illustration	Restrictions	Update	18:04	24.11.2005	PORSCHE PET PORSCHE
964	94	8	05	805-00		194			

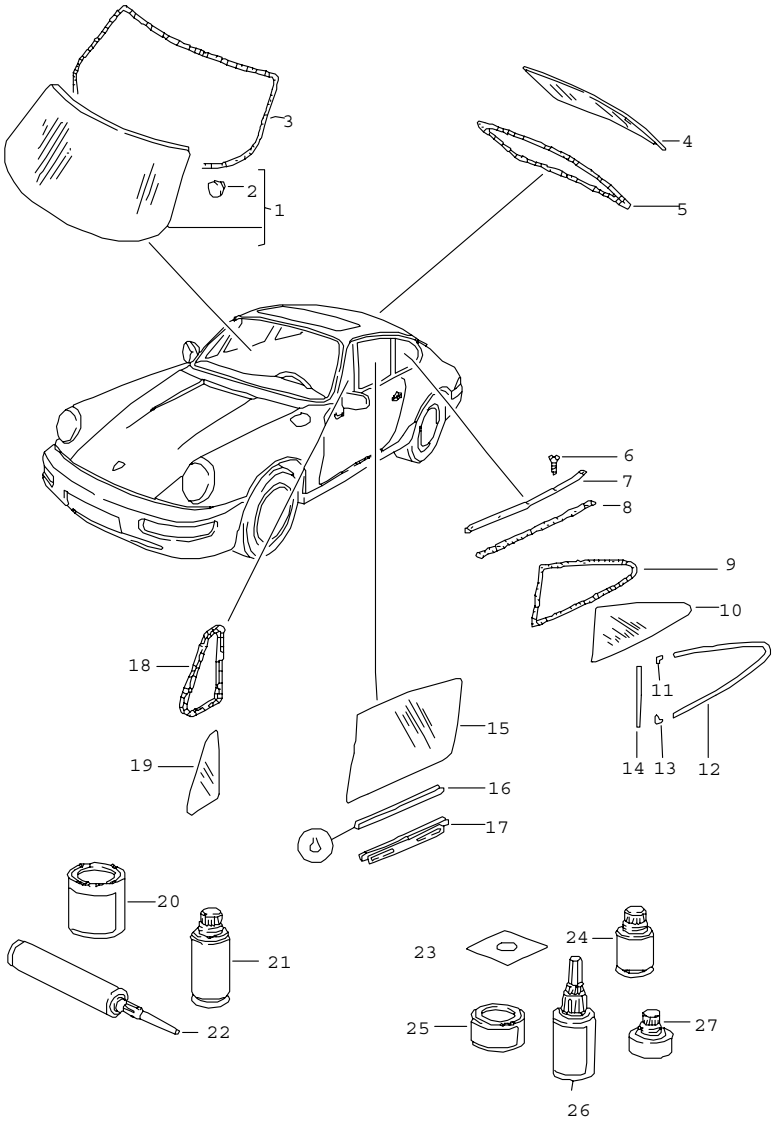

Pos	Part Number	Name	Remarks	Qty	Model
		windows			COUPE
1	964 541 011 00	windscreen tinted		1	
1	964 541 011 01	windscreen tinted upper part: dark green		1	
1	964 541 011 02	windscreen clear		1	
-	911 541 112 02	film for stickers self-destroying for windscreen sekuriflex	-90	1	
2	477 845 043	adhesive plate		1	
3	964 541 225 00	sealing frame		1	
4	964 545 107 04	rear window		1	C.2/4/ C.RS: M 002
4	964 545 107 05	rear window with brake light raised		1	C.2/4/ C.RS: M 002
4	964 545 107 06	rear window with rear window wiper		1	CARERRA 2/4/ TURBO
4	964 545 107 07	rear window with rear window wiper and brake light raised		1	CARRERA 2/4/ TURBO
4	964 545 107 08	rear window		1	CARRERA RS
5	964 545 225 00	sealing frame		1	
6	900 144 017 07	tapping screw B 2,9 X 13		10	
7	911 543 195 02	moulding	/L	1	
	70K	black			
(7)	911 543 196 02	moulding	/R	1	
	70K	black			
8	000 043 129 00	sealing strap roller with 10 meters		X	

Pos	Part Number	Name	Remarks	Qty	Model
9	964 543 035 00	sealing frame	/L	1	
(9)	964 543 036 00	sealing frame	/R	1	
10	964 543 101 00	rear glass	/L	1	
(10)	964 543 102 00	rear glass	/R	1	
11	911 543 187 02	covering plate		2	
12	911 543 419 01	moulding	/L	1	
(12)	911 543 420 01	moulding	/R	1	
13	911 543 185 02	covering plate		2	
14	964 543 197 00	trim frame-half	/L	1	
	70K	black			
14	964 543 198 00	trim frame-half	/R	1	
	70K	black			
15	901 542 101 35	door glass	/L	1	C.2/4/ C.RS: M 002/ TURBO
(15)	901 542 102 35	door glass	/R	1	C.2/4/ C.RS: M 002/ TURBO
(15)	959 542 101 01	door glass	/L	1	CARRERA RS
(15)	959 542 102 01	door glass	/R	1	CARRERA RS
16	911 542 491 40	rubber ply		2	C.2/4/ C.RS: M 002/ TURBO
(16)	959 542 491 00	rubber ply		2	CARRERA RS
17	911 542 057 00	window lifter rail	/L	1	
(17)	911 542 058 00	window lifter rail	/R	1	
18	901 542 921 21	sealing frame	/L	1	
(18)	901 542 922 21	sealing frame	/R	1	
19	911 542 511 00	side window	/L	1	C.2/4/ C.RS: M 002/ TURBO
(19)	911 542 512 00	side window	/R	1	C.2/4/ C.RS: M 002/ TURBO
(19)	959 542 501 00	side window	/L	1	CARRERA RS
(19)	959 542 502 00	side window	/R	1	CARRERA RS
		adhesive for windows			
20	000 043 158 00	primer PRIMER		X	
21	999 915 478 40	cleaning agents		X	
22	000 043 204 82	adhesive		X	
		adhesive for interior mirror see technical information GR.6 NR.5/91			
23	000 043 177 00	cover foil		1	
24	000 043 157 00	cleaning agents		X	
25	000 043 158 00	primer PRIMER		X	
26	000 043 051 00	adhesive		X	
27	000 043 202 65	loctite AKTIVATOR		X	
		- -- E N D -- -			

Model	Year	MG	SG	Illustration	Restrictions	Update	18:04	24.11.2005	PORSCHE PET PORSCHE
964	94	8	05	805-05		194			

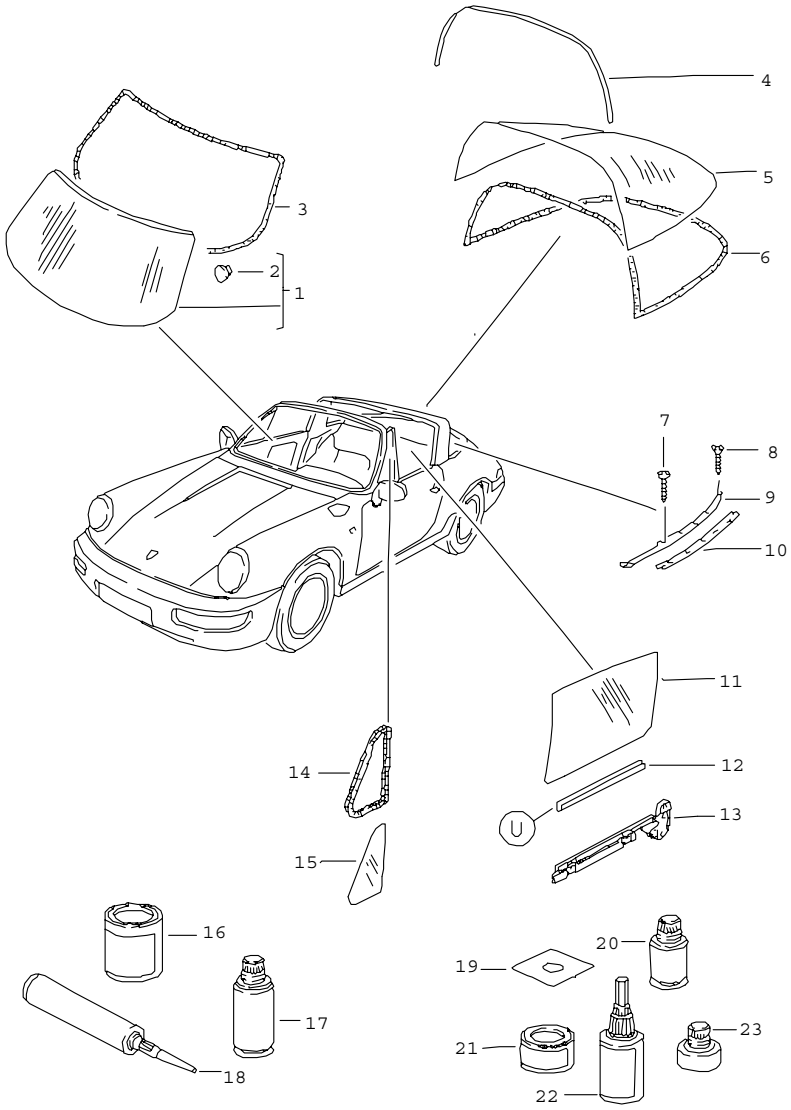

Pos	Part Number	Name	Remarks	Qty	Model
		windows			TARGA/CABRIO
1	964 541 011 00	windscreen tinted		1	
1	964 541 011 01	windscreen tinted upper part: dark green		1	
1	964 541 011 02	windscreen clear		1	
1	964 541 011 00	windscreen tinted sekuriflex	90	1	
1	964 541 011 01	windscreen tinted upper part: dark green sekuriflex	90	1	
1	964 541 011 02	windscreen clear sekuriflex	90	1	
-	911 541 112 02	film for stickers for windscreen sekuriflex self-destroying	90	1	
2	477 845 043	adhesive plate		1	
3	964 541 225 00	sealing frame		1	
4	964 504 765 40	gasket		1	TARGA
5	964 545 107 40	rear window		1	TARGA
5	964 545 107 41	rear window with brake light raised		1	TARGA
5	964 545 107 42	rear window with rear window wiper		1	TARGA
5	964 545 107 43	rear window with rear window wiper and brake light raised		1	TARGA
6	964 545 052 40	sealing frame		1	TARGA

Pos	Part Number	Name	Remarks	Qty	Model
7	900 144 009 00	counters. head tapp. screw B 2,9 X 13		2	TARGA
8	N 013 957 5	tapping screw B 3,5 X 9,5		8	TARGA
9	964 559 595 40	moulding	/L	1	TARGA
	70K	black			
(9)	964 559 596 40	moulding	/R	1	TARGA
	70K	black			
10	901 565 557 40	piping		2	TARGA
11	911 542 101 45	door glass	/L	1	
(11)	911 542 102 45	door glass	/R	1	
12	911 542 491 40	rubber ply		2	
13	911 542 057 42	window lifter rail	/L	1	
(13)	911 542 058 42	window lifter rail	/R	1	
14	911 799 542 85	sealing frame		2	
15	911 542 503 41	side window	/L	1	
(15)	911 542 504 41	side window	/R	1	
		adhesive for windows			
16	000 043 158 00	primer PRIMER		X	
17	999 915 478 40	cleaning agents		X	
18	000 043 204 82	adhesive		X	
		adhesive for interior mirror see technical information GR.6 NR.5/91			
19	000 043 177 00	cover foil		1	
20	000 043 157 00	cleaning agents		X	
21	000 043 158 00	primer PRIMER		X	
22	000 043 051 00	adhesive		X	
23	000 043 202 65	loctite AKTIVATOR		X	

- -- E N D -- -

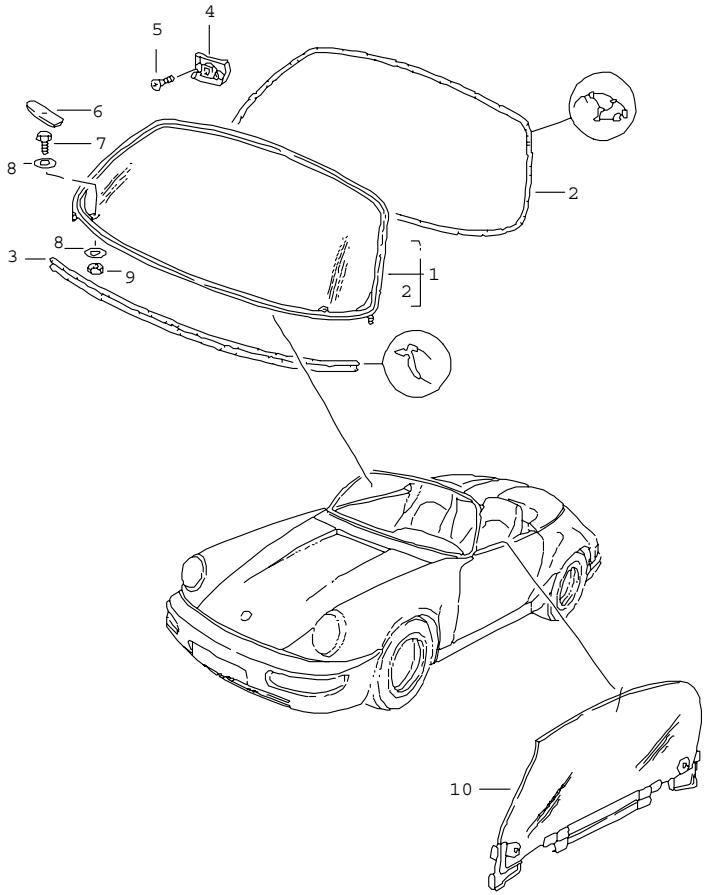

Pos	Part Number	Name	Remarks	Qty	Model
		windows			SPEEDSTER
1	964 541 905 00	windscreen frame part with windscreen tinted		1	
-	964 541 011 06	windscreen tinted		1	
1	U 964 541 905 01	windscreen frame part with windscreen clear		1	
2	964 541 321 00	gasket		1	
3	964 541 343 00	gasket		1	
(4)	911 561 729 04	guide	/L	1	
	01C	satin black			
4	911 561 730 04	guide	/R	1	
	01C	satin black			
5	900 270 009 02	countersunk-head screw M 4 X 8		4	
(6)	964 552 581 00	cover	/L	1	
	70C	rally black			
6	964 552 582 00	cover	/R	1	
	70C	rally black			
7	900 075 040 02	hexagon-head bolt M 10 X 20		2	
8	900 025 008 09	washer A 10,5 X 21 X 2		4	
9	N 011 010 6	hexagon nut M 10		2	
10	964 542 011 00	door glass tinted	/L	1	
(10)	964 542 012 00	door glass tinted	/R	1	
		- -- E N D -- -			

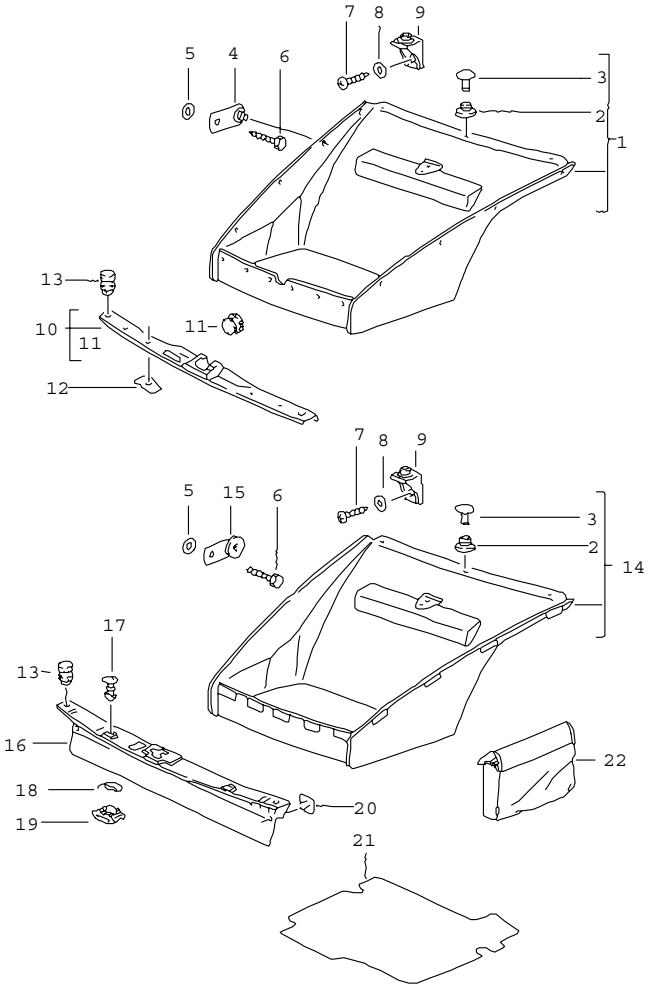

Pos	Part Number	Name	Remarks	Qty	Model
		interior equipment front trunk			
(1)	964 551 067 01	front-compartment carpet for cars with push button carpet	/LL -91	1	M 286
	5FV	black			
(1)	964 551 067 03	front-compartment carpet for cars with push button carpet	/RL -91	1	M 286
	5FV	black			
1	964 551 067 04	front-compartment carpet		1	CARRERA 2/4/ TURBO/ CARRERA RS: M 002 TURBO-LOOK
		for cars with push button carpet			
	5FV	black			
2	999 591 836 17	push button		12	
3	999 591 838 17	cap		12	
4	911 503 075 00	desk pad		8	
5	999 704 157 40	washer 5,5 X 18 X 1,5		8	
6	900 187 010 02	tapping screw BZ 6,3 X 19		8	
7	N 013 957 5	tapping screw B 3,5 X 9,5		1	
8	944 503 255 00	spacer		1	
9	964 624 033 00	retaining bracket		1	
10	964 555 085 00	cover		1	
11	999 922 003 00	plug		2	
12	999 507 254 02	clamping washer		4	
13	999 703 036 50	rubber stop		2	

Pos	Part Number	Name	Remarks	Qty	Model
(14)	964 551 067 14	front-compartment carpet for cars with transverse strut and velcro fastener carpet		1	TURBO 3,6
	5FV	black			
14	964 551 067 08	front-compartment carpet for cars with velcro fastener carpet		1	CARRERA 2/4/ TURBO/ CARRERA RS: M 002 TURBO-LOOK
	5FV	black			
(14)	964 551 067 15	front-compartment carpet for cars with transverse strut and velcro fastener and cd player carpet		1	TURBO 3,6: M 692
	5FV	black			
(14)	964 551 067 10	front-compartment carpet for cars with velcro fastener and cd player carpet		1	CARRERA 2/4/ TURBO/ TURBO-LOOK
	5FV	black			
(14)	964 551 067 12	front-compartment carpet for cars with velcro fastener carpet		1	M 545
	5FV	black			
15	964 503 375 00	desk pad		8	
16	A 964 555 585 00	cover		1	
	01C	black			
(16)	964 555 085 01	cover		1	
17	999 507 381 40	catch 13,5		2	
18	999 591 483 40	lock washer 5 X 20,3 X 1,5		2	
19	999 507 382 40	cam 5		2	
20	999 902 019 40	velcro fastener 26,15 X 26,15		5	
-	999 591 473 01	speed nut		5	
21	964 551 067 13	boot floor carpet carpet	/LL 92	1	CARRERA RS
	5FV	black			
(21)	964 551 067 07	boot floor carpet carpet	/RL 92	1	CARRERA RS
	5FV	black			
22	964 555 673 00	lining cd changer	92-	1	M 327/692
	5FV	black			

- -- E N D -- -

Model	Year	MG	SG	Illustration	Restrictions	Update	18:05	24.11.2005	PORSCHE PET PORSCHE
964	94	8	07	807-01		194			

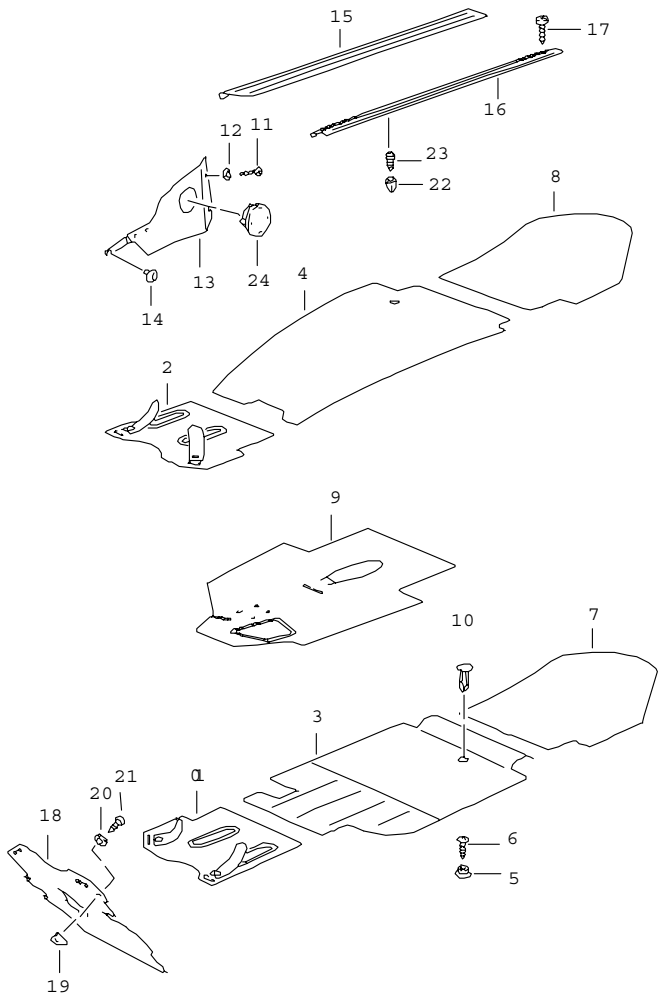

Pos	Part Number	Name	Remarks	Qty	Model
		linings footwell detachable carpets			
1	964 551 015 00	floorboard carpet carpet	/LL/L	1	M 481
	5FV	black			
	5MF	mahogany	-90		
	4KV	marine blue			
	8MD	burgundy	-90		
	9MT	velvet red	-90		
	2XF	linen	-90		
	8UT	cashmere beige			
	5UM	caramel	-90		
	7VT	silk grey	-90		
	3KM	venetian blue	-90		
	3WT	slate grey	-90		
	6YR	light grey	91-		
	4XR	classic grey	91-		
	4ZN	cobalt blue	91-		
	8WZ	magenta	91-		
	J23	sherwood green	91-		
	D13	carrara grey	91-		
	M33	matador red	91-		
	M10	rhodamine	92		
	K20	wimbledon green	92		
	D50	florentine grey	92		
	8AS	rubicon grey	93		M 096
(1)	964 551 015 01	floorboard carpet carpet	/LL/L	1	M 249
	5FV	black			
	5MF	mahogany	-90		

Pos	Part Number	Name	Remarks	Qty	Model
	4KV	marine blue			
	8MD	burgundy	-90		
	9MT	velvet red	-90		
	2XF	linen	-90		
	8UT	cashmere beige			
	5UM	caramel	-90		
	7VT	silk grey	-90		
	3KM	venetian blue	-90		
	3WT	slate grey	-90		
	6YR	light grey	91-		
	4XR	classic grey	91-		
	4ZN	cobalt blue	91-		
	8WZ	magenta	91-		
	J23	sherwood green	91-		
	D13	carrara grey	91-		
	M33	matador red	91-		
	M10	rhodamine	92		
	K20	wimbledon green	92		
	D50	florentine grey	92		
	8AS	rubicon grey	93		M 096
2	964 551 016 00	floorboard carpet carpet for cars without foot support left pedal floor board	/RL/R	1	M 481
	5FV	black			
	5MF	mahogany	-90		
	4KV	marine blue			
	8MD	burgundy	-90		
	9MT	velvet red	-90		
	2XF	linen	-90		

Pos	Part Number	Name	Remarks	Qty	Model
	8UT	cashmere beige			
	5UM	caramel	-90		
	7VT	silk grey	-90		
	3KM	venetian blue	-90		
	3WT	slate grey	-90		
	6YR	light grey	91		
	4XR	classic grey	91		
	4ZN	cobalt blue	91		
	8WZ	magenta	91		
	J23	sherwood green	91		
	D13	carrara grey	91		
	M33	matador red	91		
(2)	964 551 016 01	floorboard carpet carpet	/RL/R-91	1	M 249
	5FV	black			
	5MF	mahogany	-90		
	4KV	marine blue			
	8MD	burgundy	-90		
	9MT	velvet red	-90		
	2XF	linen	-90		
	8UT	cashmere beige			
	5UM	caramel	-90		
	7VT	silk grey	-90		
	3KM	venetian blue	-90		
	3WT	slate grey	-90		
	6YR	light grey	91		
	4XR	classic grey	91		
	4ZN	cobalt blue	91		
	8WZ	magenta	91		
	J23	sherwood green	91		

Pos	Part Number	Name	Remarks	Qty	Model
	D13	carrara grey	91		
	M33	matador red	91		
(2)	964 551 016 02	floorboard carpet carpet for cars with foot support left pedal floor board	/RL/R	1	M 481
	5FV	black			
	4KV	marine blue			
	8UT	cashmere beige			
	6YR	light grey			
	4XR	classic grey			
	4ZN	cobalt blue			
	8WZ	magenta			
	J23	sherwood green			
	D13	carrara grey			
	M33	matador red			
	M10	rhodamine	92		
	K20	wimbledon green	92		
	D50	florentine grey	92		
	8AS	rubicon grey	93		M 096
(2)	965 551 016 00	floorboard carpet	/RL/R	1	TURBO 3,6: M 481
		carpet			
	5FV	black			
	4KV	marine blue			
	8UT	cashmere beige			
	6YR	light grey			
	4XR	classic grey			
	4ZN	cobalt blue			
	8WZ	magenta			
	J23	sherwood green			

Pos	Part Number	Name	Remarks	Qty	Model
	D13	carrara grey			
	M33	matador red			
	M10	rhodamine	92		
	K20	wimbledon green	92		
	D50	florentine grey	92		
	8AS	rubicon grey	93		M 096
(2)	964 551 016 01	floorboard carpet carpet	/RL/R92-	1	M 249
	5FV	black			
	4KV	marine blue			
	8UT	cashmere beige			
	6YR	light grey			
	4XR	classic grey			
	4ZN	cobalt blue			
	8WZ	magenta			
	J23	sherwood green			
	D13	carrara grey			
	M33	matador red			
	M10	rhodamine	92		
	K20	wimbledon green	92		
	D50	florentine grey	92		
	8AS	rubicon grey	93		M 096
3	964 551 021 00	carpet airbag carpet	/LL/L	1	M 481
	5FV	black			
	5MF	mahogany	-90		
	4KV	marine blue			
	8MD	burgundy	-90		
	2XF	linen	-90		
	8UT	cashmere beige			

Pos	Part Number	Name	Remarks	Qty	Model
	7VT	silk grey	-90		
	9MT	velvet red	-90		
	3WT	slate grey	-90		
	5UM	caramel	-90		
	3KM	venetian blue	-90		
	4XR	classic grey	91-		
	4ZN	cobalt blue	91-		
	8WZ	magenta	91-		
	6YR	light grey	91-		
	M33	matador red	91-		
	D13	carrara grey	91-		
	J23	sherwood green	91-		
	M10	rhodamine	92		
	K20	wimbledon green	92		
	D50	florentine grey	92		
	8AS	rubicon grey	93		M 096
(3)	964 551 021 01	carpet airbag carpet	/LL/L	1	M 249
	5FV	black			
	5MF	mahogany	-90		
	4KV	marine blue			
	8MD	burgundy	-90		
	2XF	linen	-90		
	8UT	cashmere beige			
	7VT	silk grey	-90		
	9MT	velvet red	-90		
	3WT	slate grey	-90		
	5UM	caramel	-90		
	3KM	venetian blue	-90		
	4XR	classic grey	91-		
	4ZN	cobalt blue	91-		
	8WZ	magenta	91-		
	6YR	light grey	91-		
	M33	matador red	91-		
	D13	carrara grey	91-		
	J23	sherwood green	91-		
	M10	rhodamine	92		
	K20	wimbledon green	92		
	D50	florentine grey	92		
	8AS	rubicon grey	93		M 096
(3)	964 551 011 00	carpet airbag carpet	/RL/L-92	1	M 481
	5FV	black			
	5MF	mahogany	-90		
	4KV	marine blue			
	8MD	burgundy	-90		
	2XF	linen	-90		
	8UT	cashmere beige			
	7VT	silk grey	-90		
	9MT	velvet red	-90		
	3WT	slate grey	-90		
	5UM	caramel	-90		
	3KM	venetian blue	-90		
	4XR	classic grey	91-		
	4ZN	cobalt blue	91-		
	8WZ	magenta	91-		
	6YR	light grey	91-		
	M33	matador red	91-		

Pos	Part Number	Name	Remarks	Qty	Model
	D13	carrara grey	91-		
	J23	sherwood green	91-		
	M10	rhodamine	92		
	K20	wimbledon green	92		
	D50	florentine grey	92		
(3)	964 551 011 01	carpet airbag carpet	/RL/L-92	1	M 249
	5FV	black			
	5MF	mahogany	-90		
	4KV	marine blue			
	8MD	burgundy	-90		
	2XF	linen	-90		
	8UT	cashmere beige			
	7VT	silk grey	-90		
	9MT	velvet red	-90		
	3WT	slate grey	-90		
	5UM	caramel	-90		
	3KM	venetian blue	-90		
	4XR	classic grey	91-		
	4ZN	cobalt blue	91-		
	8WZ	magenta	91-		
	6YR	light grey	91-		
	M33	matador red	91-		
	D13	carrara grey	91-		
	J23	sherwood green	91-		
	M10	rhodamine	92		
	K20	wimbledon green	92		
	D50	florentine grey	92		

Pos	Part Number	Name	Remarks	Qty	Model
(3)	964 551 011 02	carpet airbag carpet	/RL/L93-	1	M 481
	5FV	black			
	4KV	marine blue			
	8UT	cashmere beige			
	4XR	classic grey	91-		
	4ZN	cobalt blue	91-		
	8WZ	magenta	91-		
	6YR	light grey	91-		
	M33	matador red	91-		
	D13	carrara grey	91-		
	J23	sherwood green	91-		
	8AS	rubicon grey	93		M 096
(3)	964 551 011 03	carpet airbag carpet	/RL/L93-	1	M 249
	5FV	black			
	4KV	marine blue			
	8UT	cashmere beige			
	4XR	classic grey	91-		
	4ZN	cobalt blue	91-		
	8WZ	magenta	91-		
	6YR	light grey	91-		
	M33	matador red	91-		
	D13	carrara grey	91-		
	J23	sherwood green	91-		
	8AS	rubicon grey	93		M 096
4	964 551 012 00	carpet carpet	/LL/R-91	1	
	5FV	black			
	5MF	mahogany	-90		

Pos	Part Number	Name	Remarks	Qty	Model
	4KV	marine blue			
	8MD	burgundy	-90		
	8UT	cashmere beige			
	2XF	linen	-90		
	7VT	silk grey	-90		
	5UM	caramel	-90		
	9MT	velvet red	-90		
	3KM	venetian blue	-90		
	3WT	slate grey	-90		
	4XR	classic grey	91		
	4ZN	cobalt blue	91		
	8WZ	magenta	91		
	6YR	light grey	91		
	M33	matador red	91		
	D13	carrara grey	91		
	J23	sherwood green	91		
(4)	964 551 022 00	carpet carpet for cars without foot support left pedal floor board	/RL/R	1	M 481
	5FV	black			
	5MF	mahogany	-90		
	4KV	marine blue			
	8MD	burgundy	-90		
	8UT	cashmere beige			
	2XF	linen	-90		
	7VT	silk grey	-90		
	5UM	caramel	-90		
	9MT	velvet red	-90		
	3KM	venetian blue	-90		
	3WT	slate grey	-90		
	4XR	classic grey	91		
	4ZN	cobalt blue	91		
	8WZ	magenta	91		
	6YR	light grey	91		
	M33	matador red	91		
	D13	carrara grey	91		
	J23	sherwood green	91		
(4)	964 551 022 01	carpet carpet	/RL/R-91	1	M 249
	5FV	black			
	5MF	mahogany	-90		
	4KV	marine blue			
	8MD	burgundy	-90		
	8UT	cashmere beige			
	2XF	linen	-90		
	7VT	silk grey	-90		
	5UM	caramel	-90		
	9MT	velvet red	-90		
	3KM	venetian blue	-90		
	3WT	slate grey	-90		
	4XR	classic grey	91		
	4ZN	cobalt blue	91		
	8WZ	magenta	91		
	6YR	light grey	91		
	M33	matador red	91		
	D13	carrara grey	91		
	J23	sherwood green	91		
4	964 551 012 00	carpet carpet	/LL/R92	1	

Pos	Part Number	Name	Remarks	Qty	Model
	5FV	black			
	4KV	marine blue			
	8UT	cashmere beige			
	4XR	classic grey			
	4ZN	cobalt blue			
	8WZ	magenta			
	6YR	light grey			
	M33	matador red			
	D13	carrara grey			
	J23	sherwood green			
	M10	rhodamine	92		
	K20	wimbledon green	92		
	D50	florentine grey	92		
(4)	964 551 012 01	carpet carpet	/LL/R93	1	
	5FV	black			
	4KV	marine blue			
	8UT	cashmere beige			
	4XR	classic grey			
	4ZN	cobalt blue			
	8WZ	magenta			
	6YR	light grey			
	M33	matador red			
	D13	carrara grey			
	J23	sherwood green			
	8AS	rubicon grey	93		M 096
(4)	964 551 022 02	carpet carpet for cars with foot support left pedal floor board	/RL/R	1	M 481
	5FV	black			
	4KV	marine blue			
	8UT	cashmere beige			
	4XR	classic grey			
	4ZN	cobalt blue			
	8WZ	magenta			
	6YR	light grey			
	M33	matador red			
	D13	carrara grey			
	J23	sherwood green			
	M10	rhodamine	92		
	K20	wimbledon green	92		
	D50	florentine grey	92		
	8AS	rubicon grey	93		M 096
(4)	964 551 022 01	carpet carpet	/RL/R92-	1	M 249
	5FV	black			
	4KV	marine blue			
	8UT	cashmere beige			
	4XR	classic grey			
	4ZN	cobalt blue			
	8WZ	magenta			
	6YR	light grey			
	M33	matador red			
	D13	carrara grey			
	J23	sherwood green			
	M10	rhodamine	92		
	K20	wimbledon green	92		
	D50	florentine grey	92		
	8AS	rubicon grey	93		M 096

Pos	Part Number	Name	Remarks	Qty	Model
5	999 591 834 17	snap fastener lower part		2	
6	900 143 072 02	oval-head sheetmetal screw B 3,5 X 19		2	
7	964 551 013 00	carpet carpet	/H/L	1	
	5FV	black			
	5MF	mahogany	-90		
	4KV	marine blue			
	8MD	burgundy	-90		
	8UT	cashmere beige			
	2XF	linen	-90		
	7VT	silk grey	-90		
	5UM	caramel	-90		
	9MT	velvet red	-90		
	3KM	venetian blue	-90		
	3WT	slate grey	-90		
	4XR	classic grey	91-		
	4ZN	cobalt blue	91-		
	8WZ	magenta	91-		
	6YR	light grey	91-		
	M33	matador red	91-		
	D13	carrara grey	91-		
	J23	sherwood green	91-		
	M10	rhodamine	92		
	K20	wimbledon green	92		
	D50	florentine grey	92		
	8AS	rubicon grey	93		M 096
8	964 551 014 00	carpet carpet	/H/R	1	
	5FV	black			
	5MF	mahogany	-90		
	4KV	marine blue			
	8MD	burgundy	-90		
	8UT	cashmere beige			
	2XF	linen	-90		
	7VT	silk grey	-90		
	5UM	caramel	-90		
	9MT	velvet red	-90		
	3KM	venetian blue	-90		
	3WT	slate grey	-90		
	4XR	classic grey	91-		
	4ZN	cobalt blue	91-		
	8WZ	magenta	91-		
	6YR	light grey	91-		
	M33	matador red	91-		
	D13	carrara grey	91-		
	J23	sherwood green	91-		
	M10	rhodamine	92		
	K20	wimbledon green	92		
	D50	florentine grey	92		
	8AS	rubicon grey	93		M 096
(9)	964 551 023 01	carpet for tunnel carpet	/LL -91	1	
	5FV	black			
	5MF	mahogany	-90		
	4KV	marine blue			
	8MD	burgundy	-90		
	8UT	cashmere beige			
	2XF	linen	-90		
	7VT	silk grey	-90		
	5UM	caramel	-90		

Pos	Part Number	Name	Remarks	Qty	Model
	9MT	velvet red	-90		
	3KM	venetian blue	-90		
	3WT	slate grey	-90		
	4XR	classic grey	91		
	4ZN	cobalt blue	91		
	8WZ	magenta	91		
	6YR	light grey	91		
	M33	matador red	91		
	D13	carrara grey	91		
	J23	sherwood green	91		
(9)	964 551 024 00	carpet for tunnel carpet for cars without foot support left pedal floor board	/RL	1	
	5FV	black			
	5MF	mahogany	-90		
	4KV	marine blue			
	8MD	burgundy	-90		
	8UT	cashmere beige			
	2XF	linen	-90		
	7VT	silk grey	-90		
	5UM	caramel	-90		
	9MT	velvet red	-90		
	3KM	venetian blue	-90		
	3WT	slate grey	-90		
	4XR	classic grey	91		
	4ZN	cobalt blue	91		
	8WZ	magenta	91		
	6YR	light grey	91		
	M33	matador red	91		
	D13	carrara grey	91		
	J23	sherwood green	91		
(9)	964 551 024 02	carpet for tunnel carpet for cars with foot support left pedal floor board	/RL -92	1	
	5FV	black			
	4KV	marine blue			
	8UT	cashmere beige			
	4XR	classic grey			
	4ZN	cobalt blue			
	8WZ	magenta			
	6YR	light grey			
	M33	matador red			
	D13	carrara grey			
	J23	sherwood green			
	M10	rhodamine	92		
	K20	wimbledon green	92		
	D50	florentine grey	92		
(9)	964 551 024 03	carpet for tunnel carpet	/RL 93	1	
	5FV	black			
	4KV	marine blue			
	8UT	cashmere beige			
	4XR	classic grey			
	4ZN	cobalt blue			
	8WZ	magenta			
	6YR	light grey			
	M33	matador red			
	D13	carrara grey			

Pos	Part Number	Name	Remarks	Qty	Model
	J23	sherwood green			
	8AS	rubicon grey	93		M 096
(9)	964 551 023 01	carpet for tunnel carpet	/LL	1	
	5FV	black			
	4KV	marine blue			
	8UT	cashmere beige			
	4XR	classic grey			
	4ZN	cobalt blue			
	8WZ	magenta			
	6YR	light grey			
	M33	matador red			
	D13	carrara grey			
	J23	sherwood green			
	M10	rhodamine	92		
	K20	wimbledon green	92		
	D50	florentine grey	92		
	8AS	rubicon grey	93		M 096
10	999 507 070 03	push button $=7,0		1	CARRERA RS
11	900 145 070 07	tapping screw B 3,5 X 16		4	
12	999 591 102 17	washer 3,5		4	
(13)	964 551 049 03	lining carpet	/LL/L	1	M 564
	5FV	black			
	5MF	mahogany	-90		
	4KV	marine blue			
	8MD	burgundy	-90		
	2XF	linen	-90		
	8UT	cashmere beige			
	7VT	silk grey	-90		
	9MT	velvet red	-90		
	3WT	slate grey	-90		
	5UM	caramel	-90		
	3KM	venetian blue	-90		
	4XR	classic grey	91-		
	4ZN	cobalt blue	91-		
	8WZ	magenta	91-		
	6YR	light grey	91-		
	M33	matador red	91-		
	D13	carrara grey	91-		
	J23	sherwood green	91-		
	M10	rhodamine	92		
	K20	wimbledon green	92		
	D50	florentine grey	92		
(13)	964 551 049 04	lining airbag carpet	/LL/L	1	
	5FV	black			
	5MF	mahogany	-90		
	4KV	marine blue			
	8MD	burgundy	-90		
	2XF	linen	-90		
	8UT	cashmere beige			
	7VT	silk grey	-90		
	9MT	velvet red	-90		
	3WT	slate grey	-90		
	5UM	caramel	-90		
	3KM	venetian blue	-90		
	4XR	classic grey	91-		

Pos	Part Number	Name	Remarks	Qty	Model
	4ZN	cobalt blue	91-		
	8WZ	magenta	91-		
	6YR	light grey	91-		
	M33	matador red	91-		
	D13	carrara grey	91-		
	J23	sherwood green	91-		
	M10	rhodamine	92		
	K20	wimbledon green	92		
	D50	florentine grey	92		
13	964 551 050 03	lining carpet	/LL/R	1	M 564
	5FV	black			
	5MF	mahogany	-90		
	4KV	marine blue			
	8MD	burgundy	-90		
	2XF	linen	-90		
	8UT	cashmere beige			
	7VT	silk grey	-90		
	9MT	velvet red	-90		
	3WT	slate grey	-90		
	5UM	caramel	-90		
	3KM	venetian blue	-90		
	4XR	classic grey	91-		
	4ZN	cobalt blue	91-		
	8WZ	magenta	91-		
	6YR	light grey	91-		
	M33	matador red	91-		
	D13	carrara grey	91-		
	J23	sherwood green	91-		
	M10	rhodamine	92		
	K20	wimbledon green	92		
	D50	florentine grey	92		
(13)	964 551 050 04	lining airbag carpet	/LL/R	1	
	5FV	black			
	5MF	mahogany	-90		
	4KV	marine blue			
	8MD	burgundy	-90		
	2XF	linen	-90		
	8UT	cashmere beige			
	7VT	silk grey	-90		
	9MT	velvet red	-90		
	3WT	slate grey	-90		
	5UM	caramel	-90		
	3KM	venetian blue	-90		
	4XR	classic grey	91-		
	4ZN	cobalt blue	91-		
	8WZ	magenta	91-		
	6YR	light grey	91-		
	M33	matador red	91-		
	D13	carrara grey	91-		
	J23	sherwood green	91-		
	M10	rhodamine	92		
	K20	wimbledon green	92		
	D50	florentine grey	92		
(13)	964 551 049 05	lining carpet	/RL/L	1	
	5FV	black			
	5MF	mahogany	-90		
	4KV	marine blue			

Pos	Part Number	Name	Remarks	Qty	Model
	8MD	burgundy	-90		
	2XF	linen	-90		
	8UT	cashmere beige			
	7VT	silk grey	-90		
	9MT	velvet red	-90		
	3WT	slate grey	-90		
	5UM	caramel	-90		
	3KM	venetian blue	-90		
	4XR	classic grey	91-		
	4ZN	cobalt blue	91-		
	8WZ	magenta	91-		
	6YR	light grey	91-		
	M33	matador red	91-		
	D13	carrara grey	91-		
	J23	sherwood green	91-		
	M10	rhodamine	92		
	K20	wimbledon green	92		
	D50	florentine grey	92		
(13)	964 551 050 05	lining carpet	/RL/R	1	
	5FV	black			
	5MF	mahogany	-90		
	4KV	marine blue			
	8MD	burgundy	-90		
	2XF	linen	-90		
	8UT	cashmere beige			
	7VT	silk grey	-90		
	9MT	velvet red	-90		
	3WT	slate grey	-90		
	5UM	caramel	-90		
	3KM	venetian blue	-90		
	4XR	classic grey	91-		
	4ZN	cobalt blue	91-		
	8WZ	magenta	91-		
	6YR	light grey	91-		
	M33	matador red	91-		
	D13	carrara grey	91-		
	J23	sherwood green	91-		
	M10	rhodamine	92		
	K20	wimbledon green	92		
	D50	florentine grey	92		
(13)	964 551 049 04	lining carpet	/LL/L	1	
	8AS	rubicon grey	93		M 096
(13)	964 551 050 04	lining carpet	/LL/R	1	
	8AS	rubicon grey	93		M 096
(13)	964 551 049 05	lining carpet	/RL/L	1	
	8AS	rubicon grey	93		M 096
(13)	964 551 050 05	lining carpet	/RL/R	1	
	8AS	rubicon grey	93		M 096
14	N 900 685 01	push button		1	
15	911 551 619 00	rubber pad	/L	1	
(15)	911 551 620 00	rubber pad	/R	1	
16	901 551 419 28	cover strip	-90	2	
16	964 551 419 00	cover strip	91-	2	
	01C	black			
(16)	964 551 219 01	cover strip		2	SPEEDSTER
	01C	black			

Pos	Part Number	Name	Remarks	Qty	Model
17	900 145 041 07	tapping screw B 3,5 X 16	-90	10	
18	964 551 601 00	pedal floor board	/LL/L	1	M 481
(18)	964 551 601 01	pedal floor board	/LL/L	1	M 249
(18)	964 551 064 00	pedal floor board for cars without foot support left pedal floor board	/RL/R	1	M 481
(18)	A 964 551 064 02	pedal floor board for cars with foot support left pedal floor board	/RL/R	1	M 481
(18)	964 551 064 02	pedal floor board for cars with foot support left pedal floor board	/RL/R	1	M 481
(18)	965 551 064 00	pedal floor board	/RL/R	1	TURBO 3,6: M 481
(18)	964 551 602 01	pedal floor board	/RL/R	1	M 249
19	999 507 020 02	speed nut B 4,2		3	
20	N 015 392 2	washer B 4,7		3	
21	900 143 007 02	tapping screw B 4,2 X 13		3	
22	999 702 202 50	grommet 4,8 X 9 X 1,55	91-	10	
23	999 507 365 40	plug 6 X 15,4	91-	10	
24	964 612 114 00	cover		1	
	01C	black data link connector			
		- -- E N D -- -			

Pos	Part Number	Name	Remarks	Qty	Model

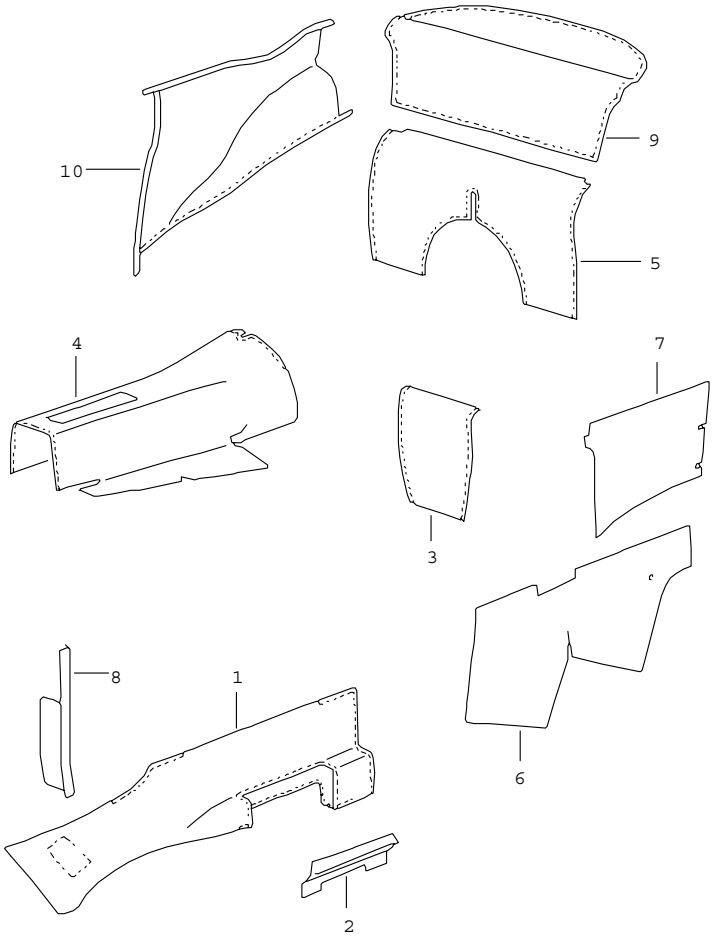

Pos	Part Number	Name	Remarks	Qty	Model
		interior equipment adhesive carpets			
1	964 551 031 00	adhesive carpet door sill	/LL/L-90	1	
	5FV	black			
	5MF	mahogany			
	4KV	marine blue			
	8MD	burgundy			
	8UT	cashmere beige			
	2XF	linen			
	7VT	silk grey			
	5UM	caramel			
	9MT	velvet red			
	3KM	venetian blue			
	3WT	slate grey			
(1)	964 551 032 00	adhesive carpet door sill	/LL/R-90	1	
	5FV	black			
	5MF	mahogany			
	4KV	marine blue			
	8MD	burgundy			
	8UT	cashmere beige			
	2XF	linen			
	7VT	silk grey			
	5UM	caramel			
	9MT	velvet red			
	3KM	venetian blue			
	3WT	slate grey			
(1)	964 551 031 02	adhesive carpet door sill	/RL/L-90	1	
	5FV	black			

Pos	Part Number	Name	Remarks	Qty	Model
	5MF	mahogany			
	4KV	marine blue			
	8MD	burgundy			
	8UT	cashmere beige			
	2XF	linen			
	7VT	silk grey			
	5UM	caramel			
	9MT	velvet red			
	3KM	venetian blue			
	3WT	slate grey			
(1)	964 551 032 02	adhesive carpet door sill	/RL/R-90	1	
	5FV	black			
	5MF	mahogany			
	4KV	marine blue			
	8MD	burgundy			
	8UT	cashmere beige			
	2XF	linen			
	7VT	silk grey			
	5UM	caramel			
	9MT	velvet red			
	3KM	venetian blue			
	3WT	slate grey			
1	964 551 031 01	adhesive carpet door sill	/LL/L91-	1	
	5FV	black			
	4KV	marine blue			
	4XR	classic grey			
	4ZN	cobalt blue			
	8UT	cashmere beige			
	8WZ	magenta			
	6YR	light grey			
	M33	matador red			
	D13	carrara grey			
	J23	sherwood green			
	M10	rhodamine	92		
	K20	wimbledon green	92		
	D50	florentine grey	92		
	8AS	rubicon grey	93		M 096
(1)	964 551 032 01	adhesive carpet door sill	/LL/R91-	1	
	5FV	black			
	4KV	marine blue			
	4XR	classic grey			
	4ZN	cobalt blue			
	8UT	cashmere beige			
	8WZ	magenta			
	6YR	light grey			
	M33	matador red			
	D13	carrara grey			
	J23	sherwood green			
	M10	rhodamine	92		
	K20	wimbledon green	92		
	D50	florentine grey	92		
	8AS	rubicon grey	93		M 096
(1)	964 551 031 03	adhesive carpet door sill	/RL/L91-	1	
	5FV	black			
	4KV	marine blue			
	4XR	classic grey			

Pos	Part Number	Name	Remarks	Qty	Model
	4ZN	cobalt blue			
	8UT	cashmere beige			
	8WZ	magenta			
	6YR	light grey			
	M33	matador red			
	D13	carrara grey			
	J23	sherwood green			
	M10	rhodamine	92		
	K20	wimbledon green	92		
	D50	florentine grey	92		
	8AS	rubicon grey	93		M 096
(1)	964 551 032 03	adhesive carpet door sill	/RL/R91-	1	
	5FV	black			
	4KV	marine blue			
	4XR	classic grey			
	4ZN	cobalt blue			
	8UT	cashmere beige			
	8WZ	magenta			
	6YR	light grey			
	M33	matador red			
	D13	carrara grey			
	J23	sherwood green			
	M10	rhodamine	92		
	K20	wimbledon green	92		
	D50	florentine grey	92		
	8AS	rubicon grey	93		M 096
2	964 551 433 00	cover plate	/L	1	
(2)	964 551 434 00	cover plate seat rail support	/R	1	
(3)	964 551 057 02	adhesive carpet heel plate	/L	1	CARRERA RS
	5FV	black			
(3)	964 551 058 00	adhesive carpet heel plate	/R	1	CARRERA RS
	5FV	black			
(3)	964 551 057 02	adhesive carpet heel plate	/L	1	SPEEDSTER
	5FV	black			
(3)	964 551 058 00	adhesive carpet heel plate	/R	1	SPEEDSTER
	5FV	black			
3	964 551 057 00	adhesive carpet heel plate		2	
	5FV	black			
	5MF	mahogany	-90		
	4KV	marine blue			
	8MD	burgundy	-90		
	8UT	cashmere beige			
	2XF	linen	-90		
	7VT	silk grey	-90		
	5UM	caramel	-90		
	9MT	velvet red	-90		
	3KM	venetian blue	-90		
	3WT	slate grey	-90		
	4XR	classic grey	91-		
	4ZN	cobalt blue	91-		
	8WZ	magenta	91-		
	6YR	light grey	91-		
	M33	matador red	91-		
	D13	carrara grey	91-		
	J23	sherwood green	91-		

Pos	Part Number	Name	Remarks	Qty	Model
	M10	rhodamine	92		
	K20	wimbledon green	92		
	D50	florentine grey	92		
	8AS	rubicon grey	93		M 096
4	964 551 055 00	adhesive carpet seat well		1	CARRERA 2/4/ TURBO/
	5FV	black			TURBO-LOOK
	5MF	mahogany	-90		
	4KV	marine blue			
	8MD	burgundy	-90		
	8UT	cashmere beige			
	2XF	linen	-90		
	7VT	silk grey	-90		
	5UM	caramel	-90		
	9MT	velvet red	-90		
	3KM	venetian blue	-90		
	3WT	slate grey	-90		
	4XR	classic grey	91-		
	4ZN	cobalt blue	91-		
	8WZ	magenta	91-		
	6YR	light grey	91-		
	M33	matador red	91-		
	D13	carrara grey	91-		
	J23	sherwood green	91-		
	M10	rhodamine	92		
	K20	wimbledon green	92		
	D50	florentine grey	92		
	8AS	rubicon grey	93		M 096
(4)	964 551 055 01	adhesive carpet seat well		1	CARRERA RS
	5FV	black			
(4)	964 551 055 01	adhesive carpet seat well		1	SPEEDSTER
	5FV	black			
(5)	964 551 059 02	adhesive carpet seat well		1	CARRERA RS
	5FV	black			
(5)	964 551 059 03	adhesive carpet seat well		1	C.RS:M 002
	5FV	black			
5	964 551 059 00	adhesive carpet seat well		1	CARRERA 2/4/ TURBO/
	5FV	black			TURBO-LOOK
	5MF	mahogany	-90		
	4KV	marine blue			
	8MD	burgundy	-90		
	8UT	cashmere beige			
	2XF	linen	-90		
	7VT	silk grey	-90		
	5UM	caramel	-90		
	9MT	velvet red	-90		
	3KM	venetian blue	-90		
	3WT	slate grey	-90		
	4XR	classic grey	91-		
	4ZN	cobalt blue	91-		
	8WZ	magenta	91-		
	6YR	light grey	91-		
	M33	matador red	91-		
	D13	carrara grey	91-		
	J23	sherwood green	91-		
	M10	rhodamine	92		

Pos	Part Number	Name	Remarks	Qty	Model
	K20	wimbledon green	92		
	D50	florentine grey	92		
	8AS	rubicon grey	93		M 096
(6)	964 551 361 02	adhesive carpet side member	/L	1	CARRERA RS
	5FV	black			
(6)	964 551 362 02	adhesive carpet side member	/R	1	CARRERA RS
	5FV	black			
(6)	964 551 361 02	adhesive carpet side member	/L	1	SPEEDSTER
	5FV	black			
(6)	964 551 362 02	adhesive carpet side member	/R	1	SPEEDSTER
	5FV	black			
6	964 551 361 00	adhesive carpet	/L	1	CARRERA 2/4/ TURBO/ TURBO-LOOK
		side member			
	5FV	black			
	5MF	mahogany	-90		
	4KV	marine blue			
	8MD	burgundy	-90		
	8UT	cashmere beige			
	2XF	linen	-90		
	7VT	silk grey	-90		
	5UM	caramel	-90		
	9MT	velvet red	-90		
	3KM	venetian blue	-90		
	3WT	slate grey	-90		
	4XR	classic grey	91-		
	4ZN	cobalt blue	91-		
	8WZ	magenta	91-		
	6YR	light grey	91-		
	M33	matador red	91-		
	D13	carrara grey	91-		
	J23	sherwood green	91-		
	M10	rhodamine	92		
	K20	wimbledon green	92		
	D50	florentine grey	92		
	8AS	rubicon grey	93		M 096
(6)	964 551 362 00	adhesive carpet	/R	1	CARRERA 2/4/ TURBO/ TURBO-LOOK
		side member			
	5FV	black			
	5MF	mahogany	-90		
	4KV	marine blue			
	8MD	burgundy	-90		
	8UT	cashmere beige			
	2XF	linen	-90		
	7VT	silk grey	-90		
	5UM	caramel	-90		
	9MT	velvet red	-90		
	3KM	venetian blue	-90		
	3WT	slate grey	-90		
	4XR	classic grey	91-		
	4ZN	cobalt blue	91-		
	8WZ	magenta	91-		
	6YR	light grey	91-		
	M33	matador red	91-		
	D13	carrara grey	91-		
	J23	sherwood green	91-		
	M10	rhodamine	92		

Pos	Part Number	Name	Remarks	Qty	Model
	K20	wimbledon green	92		
	D50	florentine grey	92		
	8AS	rubicon grey	93		M 096
7	964 551 771 00	adhesive carpet rear	/L 90-	1	CABRIO
	5FV	black			
	5MF	mahogany	-90		
	4KV	marine blue			
	8MD	burgundy	-90		
	2XF	linen	-90		
	8UT	cashmere beige			
	7VT	silk grey	-90		
	9MT	velvet red	-90		
	3WT	slate grey	-90		
	5UM	caramel	-90		
	3KM	venetian blue	-90		
	4XR	classic grey	91-		
	4ZN	cobalt blue	91-		
	8WZ	magenta	91-		
	6YR	light grey	91-		
	M33	matador red	91-		
	D13	carrara grey	91-		
	J23	sherwood green	91-		
	M10	rhodamine	92		
	K20	wimbledon green	92		
	D50	florentine grey	92		
(7)	964 551 772 00	adhesive carpet rear	/R 90-	1	CABRIO
	5FV	black			
	5MF	mahogany	-90		
	4KV	marine blue			
	8MD	burgundy	-90		
	2XF	linen	-90		
	8UT	cashmere beige			
	7VT	silk grey	-90		
	9MT	velvet red	-90		
	3WT	slate grey	-90		
	5UM	caramel	-90		
	3KM	venetian blue	-90		
	4XR	classic grey	91-		
	4ZN	cobalt blue	91-		
	8WZ	magenta	91-		
	6YR	light grey	91-		
	M33	matador red	91-		
	D13	carrara grey	91-		
	J23	sherwood green	91-		
	M10	rhodamine	92		
	K20	wimbledon green	92		
	D50	florentine grey	92		
(7)	964 551 075 00	adhesive carpet rear	/L	1	SPEEDSTER
	5FV	black			
(7)	964 551 076 00	adhesive carpet rear	/R	1	SPEEDSTER
	5FV	black			
8	964 551 157 00	lining strap hinge pillar carpet	/LL/L	1	
	5FV	black			
	5MF	mahogany	-90		
	4KV	marine blue			

Pos	Part Number	Name	Remarks	Qty	Model
	8MD	burgundy	-90		
	8UT	cashmere beige			
	2XF	linen	-90		
	7VT	silk grey	-90		
	5UM	caramel	-90		
	9MT	velvet red	-90		
	3KM	venetian blue	-90		
	3WT	slate grey	-90		
	4XR	classic grey	91-		
	4ZN	cobalt blue	91-		
	8WZ	magenta	91-		
	6YR	light grey	91-		
	M33	matador red	91-		
	D13	carrara grey	91-		
	J23	sherwood green	91-		
	M10	rhodamine	92		
	K20	wimbledon green	92		
	D50	florentine grey	92		
(8)	964 551 158 00	lining strap hinge pillar carpet	/RL/R	1	
	5FV	black			
	5MF	mahogany	-90		
	4KV	marine blue			
	8MD	burgundy	-90		
	8UT	cashmere beige			
	2XF	linen	-90		
	7VT	silk grey	-90		
	5UM	caramel	-90		
	9MT	velvet red	-90		

Pos	Part Number	Name	Remarks	Qty	Model
	3KM	venetian blue	-90		
	3WT	slate grey	-90		
	4XR	classic grey	91-		
	4ZN	cobalt blue	91-		
	8WZ	magenta	91-		
	6YR	light grey	91-		
	M33	matador red	91-		
	D13	carrara grey	91-		
	J23	sherwood green	91-		
	M10	rhodamine	92		
	K20	wimbledon green	92		
	D50	florentine grey	92		
(8)	964 551 157 01	lining strap airbag hinge pillar carpet	/LL/L91-	1	
	5FV	black			
(8)	964 551 158 01	lining strap airbag hinge pillar carpet	/LL/R91-	1	
	5FV	black			
(8)	964 551 307 01	lining strap hinge pillar leather	/RL/L	1	
	1AJ	black	-90		
	8YR	black	91-		
(8)	964 551 308 01	lining strap hinge pillar leather	/LL/R	1	
	1AJ	black	-90		
	8YR	black	91-		

Pos	Part Number	Name	Remarks	Qty	Model
9	964 555 075 00	adhesive carpet rear wall carpet/ with logo	92	1	CARRERA RS
	BQH	black/ rubystone red			
	BQF	black/ guards red			
	BQG	black/ maritime blue			
(9)	964 555 075 02	adhesive carpet rear wall		1	SPEEDSTER
	5FV	black			
(10)	964 551 071 01	adhesive carpet side section	/L 92	1	CARRERA RS
	5FV	black			
10	964 551 072 00	adhesive carpet side section	/R 92	1	CARRERA RS
	5FV	black			
		- -- E N D -- -			

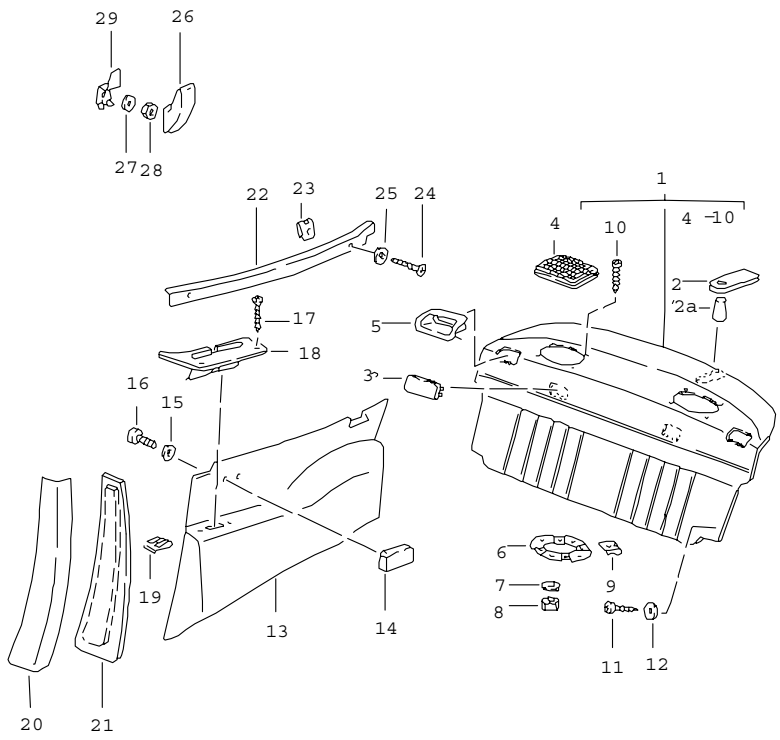

Pos	Part Number	Name	Remarks	Qty	Model
		interior equipment rear			COUPE/TARGA
(1)	964 555 111 00	back wall lining leatherette upper part/lower part	89	1	
	05T	black/black			
	1MX	mahogany/mahogany			
	1KX	marine blue/marine blue			
	3MK	burgundy/burgundy			
	TT3	black/linen			
	TT5	mahogany/linen			
	TT4	marine blue/linen			
	TT6	burgundy/linen			
	XN8	black/cashmere beige			
	XP2	marine blue/cashmere beige			
(1)	964 555 111 45	back wall lining leatherette upper part/lower part	89	1	M 425
	05T	black/black			
	1MX	mahogany/mahogany			
	1KX	marine blue/marine blue			
	3MK	burgundy/burgundy			
	TT3	black/linen			
	TT5	mahogany/linen			
	TT4	marine blue/linen			
	TT6	burgundy/linen			
	XN8	black/cashmere beige			
	XP2	marine blue/cashmere beige			
(1)	964 555 245 08	back wall lining leatherette	92	1	CARRERA RS: M 002
	05T	black			

Pos	Part Number	Name	Remarks	Qty	Model
(1)	964 555 245 09	back wall lining leatherette upper part/lower part	92-	1	COUPE:M 419
	05T	black/black			
	1KX	marine blue/marine blue			
	XN8	black/cashmere beige			
	2WJ	classic grey/classic grey			
	9ZH	cobalt blue/cobalt blue			
	4WY	magenta/magenta			
	ATK	black/light grey			
	APR	classic grey/light grey			
	ARR	cobalt blue/light grey			
	ASR	magenta/light grey			
(1)	964 555 245 11	back wall lining leatherette upper part/lower part	92-	1	COUPE:M 419/ M 425
	05T	black/black			
	1KX	marine blue/marine blue			
	XN8	black/cashmere beige			
	2WJ	classic grey/classic grey			
	9ZH	cobalt blue/cobalt blue			
	4WY	magenta/magenta			
	ATK	black/light grey			
	APR	classic grey/light grey			
	ARR	cobalt blue/light grey			
	ASR	magenta/light grey			
(1)	964 555 245 48	back wall lining leatherette upper part/lower part	92-	1	TARGA:M 419
	05T	black/black			
	1KX	marine blue/marine blue			
	XN8	black/cashmere beige			
	2WJ	classic grey/classic grey			
	9ZH	cobalt blue/cobalt blue			
	4WY	magenta/magenta			
	ATK	black/light grey			
	APR	classic grey/light grey			
	ARR	cobalt blue/light grey			
	ASR	magenta/light grey			
(1)	964 555 245 50	back wall lining leatherette upper part/lower part	92-	1	TARGA:M 419/ M 425
	05T	black/black			
	1KX	marine blue/marine blue			
	XN8	black/cashmere beige			
	2WJ	classic grey/classic grey			
	9ZH	cobalt blue/cobalt blue			
	4WY	magenta/magenta			
	ATK	black/light grey			
	APR	classic grey/light grey			
	ARR	cobalt blue/light grey			
	ASR	magenta/light grey			
1	964 555 245 00	back wall lining leatherette upper part/lower part	89	1	M 335
	05T	black/black			
	1MX	mahogany/mahogany	-90		
	1KX	marine blue/marine blue			
	3MK	burgundy/burgundy	-90		
	TT3	black/linen	-90		
	TT5	mahogany/linen	-90		
	TT4	marine blue/linen	-90		
	TT6	burgundy/linen	-90		

Pos	Part Number	Name	Remarks	Qty	Model
	XN8	black/cashmere beige			
	XP2	marine blue/cashmere beige	-90		
1	964 555 245 00	back wall lining leatherette upper part/lower part	90-	1	COUPE
	05T	black/black			
	1MX	mahogany/mahogany	-90		
	1KX	marine blue/marine blue			
	3MK	burgundy/burgundy	-90		
	TT3	black/linen	-90		
	TT5	mahogany/linen	-90		
	TT4	marine blue/linen	-90		
	TT6	burgundy/linen	-90		
	XN8	black/cashmere beige			
	XP2	marine blue/cashmere beige	-90		
	2WJ	classic grey/classic grey	91-		
	9ZH	cobalt blue/cobalt blue	91-		
	4WY	magenta/magenta	91-		
	ATK	black/light grey	91-		
	APR	classic grey/light grey	91-		
	ARR	cobalt blue/light grey	91-		
	ASR	magenta/light grey	91-		
(1)	964 555 245 02	back wall lining leatherette upper part/lower part	89	1	M 425/335
	05T	black/black			
	1MX	mahogany/mahogany	-90		
	1KX	marine blue/marine blue			
	3MK	burgundy/burgundy	-90		
	TT3	black/linen	-90		
	TT5	mahogany/linen	-90		
	TT4	marine blue/linen	-90		
	TT6	burgundy/linen	-90		
	XN8	black/cashmere beige			
	XP2	marine blue/cashmere beige	-90		
(1)	964 555 245 02	back wall lining leatherette upper part/lower part	90-	1	COUPE:M 425
	05T	black/black			
	1MX	mahogany/mahogany	-90		
	1KX	marine blue/marine blue			
	3MK	burgundy/burgundy	-90		
	TT3	black/linen	-90		
	TT5	mahogany/linen	-90		
	TT4	marine blue/linen	-90		
	TT6	burgundy/linen	-90		
	XN8	black/cashmere beige			
	XP2	marine blue/cashmere beige	-90		
	2WJ	classic grey/classic grey	91-		
	9ZH	cobalt blue/cobalt blue	91-		
	4WY	magenta/magenta	91-		
	ATK	black/light grey	91-		
	APR	classic grey/light grey	91-		
	ARR	cobalt blue/light grey	91-		
	ASR	magenta/light grey	91-		
(1)	964 555 245 40	back wall lining leatherette upper part/lower part	-93	1	TARGA
	05T	black/black			
	1MX	mahogany/mahogany	-90		
	1KX	marine blue/marine blue			
	3MK	burgundy/burgundy	-90		

Pos	Part Number	Name	Remarks	Qty	Model
	TT3	black/linen	-90		
	TT5	mahogany/linen	-90		
	TT4	marine blue/linen	-90		
	TT6	burgundy/linen	-90		
	XN8	black/cashmere beige			
	XP2	marine blue/cashmere beige	-90		
	2WJ	classic grey/classic grey	91-		
	9ZH	cobalt blue/cobalt blue	91-		
	4WY	magenta/magenta	91-		
	ATK	black/light grey	91-		
	APR	classic grey/light grey	91-		
	ARR	cobalt blue/light grey	91-		
	ASR	magenta/light grey	91-		
(1)	964 555 245 42	back wall lining leatherette upper part/lower part	-93	1	TARGA:M 425
	05T	black/black			
	1MX	mahogany/mahogany	-90		
	1KX	marine blue/marine blue			
	3MK	burgundy/burgundy	-90		
	TT3	black/linen	-90		
	TT5	mahogany/linen	-90		
	TT4	marine blue/linen	-90		
	TT6	burgundy/linen	-90		
	XN8	black/cashmere beige			
	XP2	marine blue/cashmere beige	-90		
	2WJ	classic grey/classic grey	91-		
	9ZH	cobalt blue/cobalt blue	91-		
	4WY	magenta/magenta	91-		
	ATK	black/light grey	91-		
	APR	classic grey/light grey	91-		
	ARR	cobalt blue/light grey	91-		
	ASR	magenta/light grey	91-		
(1)	964 555 111 01	back wall lining whole-leather upper part/lower part	89	1	
	KZ2	black/black			
	TV1	mahogany/mahogany			
	TS1	marine blue/marine blue			
	LG7	burgundy/burgundy			
	TV6	black/linen			
	TV8	mahogany/linen			
	TV7	marine blue/linen			
	TV9	burgundy/linen			
	XP1	black/cashmere beige			
	XP4	marine blue/cashmere beige			
	XP6	black/silk grey			
	XP8	marine blue/silk grey			
	XN6	velvet red/velvet red			
	XN7	slate grey/slate grey			
	UD5	caramel/caramel			
	UD6	venetian bl./venetian blue			
(1)	964 555 111 46	back wall lining whole-leather upper part/lower part	89	1	M 425
	KZ2	black/black			
	TV1	mahogany/mahogany			
	TS1	marine blue/marine blue			
	LG7	burgundy/burgundy			
	TV6	black/linen			
	TV8	mahogany/linen			

Pos	Part Number	Name	Remarks	Qty	Model
	TV7	marine blue/linen			
	TV9	burgundy/linen			
	XP1	black/cashmere beige			
	XP4	marine blue/cashmere beige			
	XP6	black/silk grey			
	XP8	marine blue/silk grey			
	XN6	velvet red/velvet red			
	XN7	slate grey/slate grey			
	UD5	caramel/caramel			
	UD6	venetian bl./venetian blue			
(1)	964 555 245 10	back wall lining whole-leather upper part/lower part	92-	1	COUPE:M 419
	8YR	black/black			
	6XL	classic grey/classic grey			
	9YL	cobalt blue/cobalt blue			
	6YL	magenta/magenta			
	ATM	black/light grey			
	APT	classic grey/light grey			
	ART	cobalt blue/light grey			
	AST	magenta/light grey			
	ATQ	black/cashmere beige			
	H05	marine blue/marine blue			
	M05	matador red/matador red			
	D35	carrara grey/carrara grey			
	J25	sherwood gr./sherw. green			
(1)	964 555 245 12	back wall lining whole-leather upper part/lower part	92-	1	COUPE:M 419/ M 425
	8YR	black/black			
	6XL	classic grey/classic grey			
	9YL	cobalt blue/cobalt blue			
	6YL	magenta/magenta			
	ATM	black/light grey			
	APT	classic grey/light grey			
	ART	cobalt blue/light grey			
	AST	magenta/light grey			
	ATQ	black/cashmere beige			
	H05	marine blue/marine blue			
	M05	matador red/matador red			
	D35	carrara grey/carrara grey			
	J25	sherwood gr./sherw. green			
(1)	964 555 245 49	back wall lining whole-leather upper part/lower part	92-	1	TARGA:M 419
	8YR	black/black			
	6XL	classic grey/classic grey			
	9YL	cobalt blue/cobalt blue			
	6YL	magenta/magenta			
	ATM	black/light grey			
	APT	classic grey/light grey			
	ART	cobalt blue/light grey			
	AST	magenta/light grey			
	ATQ	black/cashmere beige			
	H05	marine blue/marine blue			
	M05	matador red/matador red			
	D35	carrara grey/carrara grey			
	J25	sherwood gr./sherw. green			
(1)	964 555 245 51	back wall lining whole-leather upper part/lower part	92-	1	TARGA:M 419/ M 425
	8YR	black/black			

Pos	Part Number	Name	Remarks	Qty	Model
	6XL	classic grey/classic grey			
	9YL	cobalt blue/cobalt blue			
	6YL	magenta/magenta			
	ATM	black/light grey			
	APT	classic grey/light grey			
	ART	cobalt blue/light grey			
	AST	magenta/light grey			
	ATQ	black/cashmere beige			
	H05	marine blue/marine blue			
	M05	matador red/matador red			
	D35	carrara grey/carrara grey			
	J25	sherwood gr./sherw. green			
1	964 555 245 01	back wall lining whole-leather upper part/lower part	89	1	M 335
	KZ2	black/black	-90		
	TV1	mahogany/mahogany	-90		
	TS1	marine blue/marine blue	-90		
	LG7	burgundy/burgundy	-90		
	TV6	black/linen	-90		
	TV8	mahogany/linen	-90		
	TV7	marine blue/linen	-90		
	TV9	burgundy/linen	-90		
	XP1	black/cashmere beige	-90		
	XP4	marine blue/cashmere beige	-90		
	XP6	black/silk grey	-90		
	XP8	marine blue/silk grey	-90		
	XN6	velvet red/velvet red	-90		
	XN7	slate grey/slate grey	-90		
	UD5	caramel/caramel	-90		
	UD6	venetian bl./venetian blue	-90		
1	964 555 245 01	back wall lining whole-leather upper part/lower part	90-	1	COUPE
	KZ2	black/black	-90		
	TV1	mahogany/mahogany	-90		
	TS1	marine blue/marine blue	-90		
	LG7	burgundy/burgundy	-90		
	TV6	black/linen	-90		
	TV8	mahogany/linen	-90		
	TV7	marine blue/linen	-90		
	TV9	burgundy/linen	-90		
	XP1	black/cashmere beige	-90		
	XP4	marine blue/cashmere beige	-90		
	XP6	black/silk grey	-90		
	XP8	marine blue/silk grey	-90		
	XN6	velvet red/velvet red	-90		
	XN7	slate grey/slate grey	-90		
	UD5	caramel/caramel	-90		
	UD6	venetian bl./venetian blue	-90		
	8YR	black/black	91-		
	6XL	classic grey/classic grey	91-		
	9YL	cobalt blue/cobalt blue	91-		
	6YL	magenta/magenta	91-		
	ATM	black/light grey	91-		
	APT	classic grey/light grey	91-		
	ART	cobalt blue/light grey	91-		
	AST	magenta/light grey	91-		
	ATQ	black/cashmere beige	91-		
	H05	marine blue/marine blue	91-		

Pos	Part Number	Name	Remarks	Qty	Model
	M05	matador red/matador red	91-		
	D35	carrara grey/carrara grey	91-		
	J25	sherwood gr./sherw. green	91-		
(1)	964 555 245 03	back wall lining whole-leather upper part/lower part	89	1	M 425/335
	KZ2	black/black	-90		
	TV1	mahogany/mahogany	-90		
	TS1	marine blue/marine blue	-90		
	LG7	burgundy/burgundy	-90		
	TV6	black/linen	-90		
	TV8	mahogany/linen	-90		
	TV7	marine blue/linen	-90		
	TV9	burgundy/linen	-90		
	XP1	black/cashmere beige	-90		
	XP4	marine blue/cashmere beige	-90		
	XP6	black/silk grey	-90		
	XP8	marine blue/silk grey	-90		
	XN6	velvet red/velvet red	-90		
	XN7	slate grey/slate grey	-90		
	UD5	caramel/caramel	-90		
	UD6	venetian bl./venetian blue	-90		
(1)	964 555 245 03	back wall lining whole-leather upper part/lower part	90-	1	COUPE:M 425
	KZ2	black/black	-90		
	TV1	mahogany/mahogany	-90		
	TS1	marine blue/marine blue	-90		
	LG7	burgundy/burgundy	-90		
	TV6	black/linen	-90		
	TV8	mahogany/linen	-90		
	TV7	marine blue/linen	-90		
	TV9	burgundy/linen	-90		
	XP1	black/cashmere beige	-90		
	XP4	marine blue/cashmere beige	-90		
	XP6	black/silk grey	-90		
	XP8	marine blue/silk grey	-90		
	XN6	velvet red/velvet red	-90		
	XN7	slate grey/slate grey	-90		
	UD5	caramel/caramel	-90		
	UD6	venetian bl./venetian blue	-90		
	8YR	black/black	91-		
	6XL	classic grey/classic grey	91-		
	9YL	cobalt blue/cobalt blue	91-		
	6YL	magenta/magenta	91-		
	ATM	black/light grey	91-		
	APT	classic grey/light grey	91-		
	ART	cobalt blue/light grey	91-		
	AST	magenta/light grey	91-		
	ATQ	black/cashmere beige	91-		
	H05	marine blue/marine blue	91-		
	M05	matador red/matador red	91-		
	D35	carrara grey/carrara grey	91-		
	J25	sherwood gr./sherw. green	91-		
(1)	964 555 245 41	back wall lining whole-leather upper part/lower part	-93	1	TARGA
	KZ2	black/black	-90		
	TV1	mahogany/mahogany	-90		
	TS1	marine blue/marine blue	-90		
	LG7	burgundy/burgundy	-90		

Pos	Part Number	Name	Remarks	Qty	Model
	TV6	black/linen	-90		
	TV8	mahogany/linen	-90		
	TV7	marine blue/linen	-90		
	TV9	burgundy/linen	-90		
	XP1	black/cashmere beige	-90		
	XP4	marine blue/cashmere beige	-90		
	XP6	black/silk grey	-90		
	XP8	marine blue/silk grey	-90		
	XN6	velvet red/velvet red	-90		
	XN7	slate grey/slate grey	-90		
	UD5	caramel/caramel	-90		
	UD6	venetian bl./venetian blue	-90		
	8YR	black/black	91-		
	6XL	classic grey/classic grey	91-		
	9YL	cobalt blue/cobalt blue	91-		
	6YL	magenta/magenta	91-		
	ATM	black/light grey	91-		
	APT	classic grey/light grey	91-		
	ART	cobalt blue/light grey	91-		
	AST	magenta/light grey	91-		
	ATQ	black/cashmere beige	91-		
	H05	marine blue/marine blue	91-		
	M05	matador red/matador red	91-		
	D35	carrara grey/carrara grey	91-		
	J25	sherwood gr./sherw. green	91-		
(1)	964 555 245 43	back wall lining whole-leather upper part/lower part	-93	1	TARGA:M 425
	KZ2	black/black	-90		
	TV1	mahogany/mahogany	-90		
	TS1	marine blue/marine blue	-90		
	LG7	burgundy/burgundy	-90		
	TV6	black/linen	-90		
	TV8	mahogany/linen	-90		
	TV7	marine blue/linen	-90		
	TV9	burgundy/linen	-90		
	XP1	black/cashmere beige	-90		
	XP4	marine blue/cashmere beige	-90		
	XP6	black/silk grey	-90		
	XP8	marine blue/silk grey	-90		
	XN6	velvet red/velvet red	-90		
	XN7	slate grey/slate grey	-90		
	UD5	caramel/caramel	-90		
	UD6	venetian bl./venetian blue	-90		
	8YR	black/black	91-		
	6XL	classic grey/classic grey	91-		
	9YL	cobalt blue/cobalt blue	91-		
	6YL	magenta/magenta	91-		
	ATM	black/light grey	91-		
	APT	classic grey/light grey	91-		
	ART	cobalt blue/light grey	91-		
	AST	magenta/light grey	91-		
	ATQ	black/cashmere beige	91-		
	H05	marine blue/marine blue	91-		
	M05	matador red/matador red	91-		
	D35	carrara grey/carrara grey	91-		
	J25	sherwood gr./sherw. green	91-		
2	964 555 425 01	cover		1	COUPE:M 425

Pos	Part Number	Name	Remarks	Qty	Model
	01C	black for cars up to MOD.90 use also: POS.2A			
2	964 555 425 41	cover	-93	1	TARGA:M 425
	01C	black for cars up to MOD.90 use also: POS.2A			
2A	964 555 525 00	cover		1	M 425
	01C	black rear window wiper			
3	911 555 627 00	trim		2	(AUS)(CDN)
	01C	black			
4	944 555 149 00	loudspeaker grille		2	
	01C	satin black			
(5)	964 555 511 01	cover	/L	1	
	01C	black seat belt			
5	964 555 512 01	cover	/R	1	
	01C	black seat belt			
6	911 555 215 00	support	-90	2	
7	900 025 002 02	washer A 4,3	-90	8	
8	N 011 004 6	hexagon nut M 4	-90	8	
9	999 507 032 02	speed nut	-90	8	
9	999 507 071 00	speed nut B 3,9	91-	8	
10	900 143 178 07	oval-head sheetmetal screw B 3,9 X 22		8	
11	900 145 062 07	tapping screw B 3,5 X 25		4	
12	999 591 102 17	washer		4	
(13)	964 555 071 00	side trim panel leatherette	/L 89	1	COUPE
	05T	black			
	3MK	burgundy			
	1MX	mahogany			
	1KX	marine blue			
	4WX	linen			
	7RT	cashmere beige			
13	964 555 072 00	side trim panel leatherette	/R 89	1	COUPE
	05T	black			
	3MK	burgundy			
	1MX	mahogany			
	1KX	marine blue			
	4WX	linen			
	7RT	cashmere beige			
(13)	964 555 071 12	side trim panel leatherette	/L 90-	1	COUPE
	3MK	burgundy	90		
	1MX	mahogany	90		
	05T	black			
	1KX	marine blue			
	4WX	linen	90		
	7RT	cashmere beige			
	2WJ	classic grey	91-		
	9ZH	cobalt blue	91-		
	4WY	magenta	91-		
	1ZU	light grey	91-		
13	964 555 072 12	side trim panel leatherette	/R 90-	1	COUPE
	3MK	burgundy	90		

Pos	Part Number	Name	Remarks	Qty	Model
	1MX	mahogany	90		
	05T	black			
	1KX	marine blue			
	4WX	linen	90		
	7RT	cashmere beige			
	2WJ	classic grey	91-		
	9ZH	cobalt blue	91-		
	4WY	magenta	91-		
	1ZU	light grey	91-		
(13)	964 555 071 40	side trim panel leatherette	/L -93	1	TARGA
	3MK	burgundy	90		
	1MX	mahogany	90		
	05T	black			
	1KX	marine blue			
	4WX	linen	90		
	7RT	cashmere beige			
	2WJ	classic grey	91-		
	9ZH	cobalt blue	91-		
	4WY	magenta	91-		
	1ZU	light grey	91-		
(13)	964 555 072 40	side trim panel leatherette	/R -93	1	TARGA
	3MK	burgundy	90		
	1MX	mahogany	90		
	05T	black			
	1KX	marine blue			
	4WX	linen	90		
	7RT	cashmere beige			
	2WJ	classic grey	91-		
	9ZH	cobalt blue	91-		
	4WY	magenta	91-		
	1ZU	light grey	91-		
(13)	964 555 071 02	side trim panel leather	/L 89	1	
	KZ2	black			
	LG7	burgundy			
	TV1	mahogany			
	TS1	marine blue			
	TW1	linen			
	XN4	cashmere beige			
	XN5	silk grey			
	XN6	velvet red			
	XN7	slate grey			
	UD5	caramel			
	UD6	venetian blue			
13	964 555 072 02	side trim panel leather	/R 89	1	
	KZ2	black			
	LG7	burgundy			
	TV1	mahogany			
	TS1	marine blue			
	TW1	linen			
	XN4	cashmere beige			
	XN5	silk grey			
	XN6	velvet red			
	XN7	slate grey			
	UD5	caramel			
	UD6	venetian blue			
(13)	964 555 071 14	side trim panel leather	/L 90-	1	COUPE

Pos	Part Number	Name	Remarks	Qty	Model
	LG7	burgundy	90		
	TV1	mahogany	90		
	TS1	marine blue	90		
	KZ2	black	90		
	TW1	linen	90		
	XN4	cashmere beige	90		
	XN5	silk grey	90		
	XN6	velvet red	90		
	XN7	slate grey	90		
	UD5	caramel	90		
	UD6	venetian blue	90		
	8YR	black	91-		
	6XL	classic grey	91-		
	9YL	cobalt blue	91-		
	6YL	magenta	91-		
	8ZL	light grey	91-		
	4YU	cashmere beige	91-		
	H05	marine blue	91-		
	M05	matador red	91-		
	D35	carrara grey	91-		
	J25	sherwood green	91-		
13	964 555 072 14	side trim panel leather	/R 90-	1	COUPE
	LG7	burgundy	90		
	TV1	mahogany	90		
	TS1	marine blue	90		
	KZ2	black	90		
	TW1	linen	90		
	XN4	cashmere beige	90		
	XN5	silk grey	90		
	XN6	velvet red	90		
	XN7	slate grey	90		
	UD5	caramel	90		
	UD6	venetian blue	90		
	8YR	black	91-		
	6XL	classic grey	91-		
	9YL	cobalt blue	91-		
	6YL	magenta	91-		
	8ZL	light grey	91-		
	4YU	cashmere beige	91-		
	H05	marine blue	91-		
	M05	matador red	91-		
	D35	carrara grey	91-		
	J25	sherwood green	91-		
(13)	964 555 071 42	side trim panel leather	/L -93	1	TARGA
	LG7	burgundy	90		
	TV1	mahogany	90		
	TS1	marine blue	90		
	KZ2	black	90		
	TW1	linen	90		
	XN4	cashmere beige	90		
	XN5	silk grey	90		
	XN6	velvet red	90		
	XN7	slate grey	90		
	UD5	caramel	90		
	UD6	venetian blue	90		
	8YR	black	91-		
	6XL	classic grey	91-		
	9YL	cobalt blue	91-		

Pos	Part Number	Name	Remarks	Qty	Model
	6YL	magenta	91-		
	8ZL	light grey	91-		
	4YU	cashmere beige	91-		
	H05	marine blue	91-		
	M05	matador red	91-		
	D35	carrara grey	91-		
	J25	sherwood green	91-		
(13)	964 555 072 42	side trim panel leather	/R -93	1	TARGA
	LG7	burgundy	90		
	TV1	mahogany	90		
	TS1	marine blue	90		
	KZ2	black	90		
	TW1	linen	90		
	XN4	cashmere beige	90		
	XN5	silk grey	90		
	XN6	velvet red	90		
	XN7	slate grey	90		
	UD5	caramel	90		
	UD6	venetian blue	90		
	8YR	black	91-		
	6XL	classic grey	91-		
	9YL	cobalt blue	91-		
	6YL	magenta	91-		
	8ZL	light grey	91-		
	4YU	cashmere beige	91-		
	H05	marine blue	91-		
	M05	matador red	91-		
	D35	carrara grey	91-		
	J25	sherwood green	91-		

Pos	Part Number	Name	Remarks	Qty	Model
(13)	964 555 071 14	side trim panel leather	/L	1	COUPE:
	E38	rubicon grey	93		M 096
13	964 555 072 14	side trim panel leather	/R	1	COUPE:
	E38	rubicon grey	93		M 096
(13)	964 555 071 01	side trim panel all-cloth pin stripe velour	/L 89	1	
	7BN	black-white			
	6LN	mahogany-white			
	8GJ	blue-white			
	1MJ	burgundy-white			
	4WJ	linen white			
	4TN	cashmere beige-white			
13	964 555 072 01	side trim panel all-cloth pin stripe velour	/R 89	1	
	7BN	black-white			
	6LN	mahogany-white			
	8GJ	blue-white			
	1MJ	burgundy-white			
	4WJ	linen white			
	4TN	cashmere beige-white			
(13)	964 555 071 01	side trim panel multicolour	/L 89	1	
	2VV	black			
	8XV	mahogany			
	9JV	marine blue			
	1MV	burgundy			
	6UV	linen			
	5TC	cashmere beige			

Pos	Part Number	Name	Remarks	Qty	Model
13	964 555 072 01	side trim panel multicolour	/R 89	1	
	2VV	black			
	8XV	mahogany			
	9JV	marine blue			
	1MV	burgundy			
	6UV	linen			
	5TC	cashmere beige			
(13)	964 555 071 01	side trim panel porsche lettering cloth	/L 89	1	
	2CZ	black			
	4MR	mahogany			
	6HZ	blue			
	5LZ	burgundy			
	5WZ	linen			
	7TH	cashmere beige			
13	964 555 072 01	side trim panel porsche lettering cloth	/R 89	1	
	2CZ	black			
	4MR	mahogany			
	6HZ	blue			
	5LZ	burgundy			
	5WZ	linen			
	7TH	cashmere beige			
(13)	964 555 071 13	side trim panel all-cloth pin stripe velour	/L 90- 90	1	COUPE
	7BN	black-white			
	6LN	mahogany-white			
	8GJ	blue-white			
	1MJ	burgundy-white			
	4WJ	linen white			
	4TN	cashmere beige-white			
13	964 555 072 13	side trim panel all-cloth pin stripe velour	/R 90- 90	1	COUPE
	7BN	black-white			
	6LN	mahogany-white			
	8GJ	blue-white			
	1MJ	burgundy-white			
	4WJ	linen white			
	4TN	cashmere beige-white			
(13)	964 555 071 41	side trim panel all-cloth pin stripe velour	/L -93 90	1	TARGA
	7BN	black-white			
	6LN	mahogany-white			
	8GJ	blue-white			
	1MJ	burgundy-white			
	4WJ	linen white			
	4TN	cashmere beige-white			
(13)	964 555 072 41	side trim panel all-cloth pin stripe velour	/R -93 90	1	TARGA
	7BN	black-white			
	6LN	mahogany-white			
	8GJ	blue-white			
	1MJ	burgundy-white			
	4WJ	linen white			
	4TN	cashmere beige-white			
(13)	964 555 071 13	side trim panel multicolour	/L 90-	1	COUPE
	2VV	black			
	8XV	mahogany	90		
	9JV	marine blue			

Pos	Part Number	Name	Remarks	Qty	Model
	9WT	classic grey	91-		
	9YD	cobalt blue	91-		
	1MV	burgundy			
	6UV	linen			
	5TC	cashmere beige			
13	964 555 072 13	side trim panel multicolour	/R 90-	1	COUPE
	2VV	black			
	8XV	mahogany	90		
	9JV	marine blue			
	9WT	classic grey	91-		
	9YD	cobalt blue	91-		
	1MV	burgundy			
	6UV	linen			
	5TC	cashmere beige			
(13)	964 555 071 41	side trim panel multicolour	/L -93	1	TARGA
	2VV	black			
	8XV	mahogany	90		
	9JV	marine blue			
	9WT	classic grey	91-		
	9YD	cobalt blue	91-		
	1MV	burgundy			
	6UV	linen			
	5TC	cashmere beige			
(13)	964 555 072 41	side trim panel multicolour	/R -93	1	TARGA
	2VV	black			
	8XV	mahogany	90		
	9JV	marine blue			
	9WT	classic grey	91-		

Pos	Part Number	Name	Remarks	Qty	Model
	9YD	cobalt blue	91-		
	1MV	burgundy			
	6UV	linen			
	5TC	cashmere beige			
(13)	964 555 071 13	side trim panel porsche lettering cloth	/L 90-	1	COUPE
	2CZ	black			
	4MR	mahogany	90		
	6HZ	blue			
	5LZ	burgundy	90		
	5WZ	linen	90		
	7TH	cashmere beige			
	6WC	classic grey	91-		
	7ZK	cobalt blue	91-		
	9YC	magenta	91-		
	2ZV	light grey	91-		
13	964 555 072 13	side trim panel porsche lettering cloth	/R 90-	1	COUPE
	2CZ	black			
	4MR	mahogany	90		
	6HZ	blue			
	5LZ	burgundy	90		
	5WZ	linen	90		
	7TH	cashmere beige			
	6WC	classic grey	91-		
	7ZK	cobalt blue	91-		
	9YC	magenta	91-		
	2ZV	light grey	91-		
(13)	964 555 071 41	side trim panel porsche lettering cloth	/L -93	1	TARGA
	2CZ	black			

Pos	Part Number	Name	Remarks	Qty	Model
	4MR	mahogany	90		
	6HZ	blue			
	5LZ	burgundy	90		
	5WZ	linen	90		
	7TH	cashmere beige			
	6WC	classic grey	91-		
	7ZK	cobalt blue	91-		
	9YC	magenta	91-		
	2ZV	light grey	91-		
(13)	964 555 072 41	side trim panel porsche lettering cloth	/R -93	1	TARGA
	2CZ	black			
	4MR	mahogany	90		
	6HZ	blue			
	5LZ	burgundy	90		
	5WZ	linen	90		
	7TH	cashmere beige			
	6WC	classic grey	91-		
	7ZK	cobalt blue	91-		
	9YC	magenta	91-		
	2ZV	light grey	91-		
14	477 857 375 A	tray	89	2	M 186
	01C	black			
15	900 151 027 02	washer B 5,3	89	4	M 186
16	900 146 003 02	oval-head screw M 5 X 10	89	4	M 186
17	N 014 093 3	tapping screw BZ 4,2 X 13	89	4	
17	900 145 075 07	tapping screw B 4,2 X 16	90-	4	COUPE
18	911 555 615 01	rose	89	2	
(18)	911 803 615 00	rose	/L 90-	1	COUPE
	01C	black			
18	911 803 616 00	rose	/R 90-	1	COUPE
	01C	black			
19	999 507 020 02	speed nut 4,2		4	COUPE
(20)	911 555 757 00	cover lock pillar leatherette	/L	1	COUPE
	3MK	burgundy	-90		
	1MX	mahogany	-90		
	05T	black			
	1KX	marine blue			
	4WX	linen	-90		
	7RT	cashmere beige			
	2WJ	classic grey	91-		
	9ZH	cobalt blue	91-		
	4WY	magenta	91-		
	1ZU	light grey	91-		
20	911 555 758 00	cover lock pillar leatherette	/R	1	COUPE
	3MK	burgundy	-90		
	1MX	mahogany	-90		
	05T	black			
	1KX	marine blue			
	4WX	linen	-90		
	7RT	cashmere beige			
	2WJ	classic grey	91-		
	9ZH	cobalt blue	91-		
	4WY	magenta	91-		
	1ZU	light grey	91-		

Pos	Part Number	Name	Remarks	Qty	Model
(20)	911 555 757 40	cover lock pillar leatherette	/L -93	1	TARGA
	3MK	burgundy	-90		
	1MX	mahogany	-90		
	05T	black			
	1KX	marine blue			
	4WX	linen	-90		
	7RT	cashmere beige			
	2WJ	classic grey	91-		
	9ZH	cobalt blue	91-		
	4WY	magenta	91-		
	1ZU	light grey	91-		
(20)	911 555 758 40	cover lock pillar leatherette	/R -93	1	TARGA
	3MK	burgundy	-90		
	1MX	mahogany	-90		
	05T	black			
	1KX	marine blue			
	4WX	linen	-90		
	7RT	cashmere beige			
	2WJ	classic grey	91-		
	9ZH	cobalt blue	91-		
	4WY	magenta	91-		
	1ZU	light grey	91-		
(20)	911 555 757 70	cover lock pillar leather	/L	1	COUPE:M 981
	2LX	mahogany	-90		
	7LD	burgundy	-90		
	7JX	marine blue	-90		
	7VX	linen	-90		
	1AJ	black	-90		
	2WH	cashmere beige	-90		
	5VT	silk grey	-90		
	4MT	velvet red	-90		
	2WT	slate grey	-90		
	4UC	caramel	-90		
	7KC	venetian blue	-90		
	8YR	black	91-		
	6XL	classic grey	91-		
	9YL	cobalt blue	91-		
	6YL	magenta	91-		
	8ZL	light grey	91-		
	4YU	cashmere beige	91-		
	H05	marine blue	91-		
	M05	matador red	91-		
	D35	carrara grey	91-		
	J25	sherwood green	91-		
20	911 555 758 70	cover lock pillar leather	/R	1	COUPE:M 981
	2LX	mahogany	-90		
	7LD	burgundy	-90		
	7JX	marine blue	-90		
	7VX	linen	-90		
	1AJ	black	-90		
	2WH	cashmere beige	-90		
	5VT	silk grey	-90		
	4MT	velvet red	-90		
	2WT	slate grey	-90		

Pos	Part Number	Name	Remarks	Qty	Model
	4UC	caramel	-90		
	7KC	venetian blue	-90		
	8YR	black	91-		
	6XL	classic grey	91-		
	9YL	cobalt blue	91-		
	6YL	magenta	91-		
	8ZL	light grey	91-		
	4YU	cashmere beige	91-		
	H05	marine blue	91-		
	M05	matador red	91-		
	D35	carrara grey	91-		
	J25	sherwood green	91-		
(20)	911 555 757 75	cover lock pillar leather	/L -93	1	TARGA:M 981
	2LX	mahogany	-90		
	7LD	burgundy	-90		
	7JX	marine blue	-90		
	7VX	linen	-90		
	1AJ	black	-90		
	2WH	cashmere beige	-90		
	5VT	silk grey	-90		
	4MT	velvet red	-90		
	2WT	slate grey	-90		
	4UC	caramel	-90		
	7KC	venetian blue	-90		
	8YR	black	91-		
	6XL	classic grey	91-		
	9YL	cobalt blue	91-		
	6YL	magenta	91-		
	8ZL	light grey	91-		
	4YU	cashmere beige	91-		
	H05	marine blue	91-		
	M05	matador red	91-		
	D35	carrara grey	91-		
	J25	sherwood green	91-		
(20)	911 555 758 75	cover lock pillar leather	/R -93	1	TARGA:M 981
	2LX	mahogany	-90		
	7LD	burgundy	-90		
	7JX	marine blue	-90		
	7VX	linen	-90		
	1AJ	black	-90		
	2WH	cashmere beige	-90		
	5VT	silk grey	-90		
	4MT	velvet red	-90		
	2WT	slate grey	-90		
	4UC	caramel	-90		
	7KC	venetian blue	-90		
	8YR	black	91-		
	6XL	classic grey	91-		
	9YL	cobalt blue	91-		
	6YL	magenta	91-		
	8ZL	light grey	91-		
	4YU	cashmere beige	91-		
	H05	marine blue	91-		
	M05	matador red	91-		
	D35	carrara grey	91-		
	J25	sherwood green	91-		

Pos	Part Number	Name	Remarks	Qty	Model
(20)	911 555 757 70	cover lock pillar	/L	1	COUPE:M 981
	E38	rubicon grey	93		M 096
20	911 555 758 70	cover leather lock pillar	/R	1	COUPE:M 981
	E38	rubicon grey	93		M 096
(21)	901 555 023 01	filler piece	/L -93	1	TARGA
21	901 555 024 01	filler piece	/R -93	1	TARGA
(21)	911 555 641 00	desk pad	/L	1	COUPE
(21)	911 555 642 00	desk pad	/R	1	COUPE
(22)	964 555 091 02	rear covering leatherette	/L	1	COUPE
	3MK	burgundy	-90		
	05T	black			
	1MX	mahogany	-90		
	1KX	marine blue			
	2WJ	classic grey	91-		
	9ZH	cobalt blue	91-		
	4WY	magenta	91-		
22	964 555 092 02	rear covering leatherette	/R	1	COUPE
	3MK	burgundy	-90		
	05T	black			
	1MX	mahogany	-90		
	1KX	marine blue			
	2WJ	classic grey	91-		
	9ZH	cobalt blue	91-		
	4WY	magenta	91-		
(22)	964 555 091 40	rear covering leatherette	/L -93	1	TARGA
	3MK	burgundy	-90		
	05T	black			
	1MX	mahogany	-90		
	1KX	marine blue			
	2WJ	classic grey	91-		
	9ZH	cobalt blue	91-		
	4WY	magenta	91-		
(22)	964 555 092 40	rear covering leatherette	/R -93	1	TARGA
	3MK	burgundy	-90		
	05T	black			
	1MX	mahogany	-90		
	1KX	marine blue			
	2WJ	classic grey	91-		
	9ZH	cobalt blue	91-		
	4WY	magenta	91-		
(22)	964 555 091 03	rear covering leather	/L	1	COUPE
	LG7	burgundy	-90		
	TV1	mahogany	-90		
	KZ2	black	-90		
	TS1	marine blue	-90		
	XN6	velvet red	-90		
	XN7	slate grey	-90		
	UD5	caramel	-90		
	UD6	venetian blue	-90		
	8YR	black	91-		
	6XL	classic grey	91-		
	9YL	cobalt blue	91-		
	6YL	magenta	91-		
	H05	marine blue	91-		

Pos	Part Number	Name	Remarks	Qty	Model
	M05	matador red	91-		
	D35	carrara grey	91-		
	J25	sherwood green	91-		
22	964 555 092 03	rear covering leather	/R	1	COUPE
	LG7	burgundy	-90		
	TV1	mahogany	-90		
	KZ2	black	-90		
	TS1	marine blue	-90		
	XN6	velvet red	-90		
	XN7	slate grey	-90		
	UD5	caramel	-90		
	UD6	venetian blue	-90		
	8YR	black	91-		
	6XL	classic grey	91-		
	9YL	cobalt blue	91-		
	6YL	magenta	91-		
	H05	marine blue	91-		
	M05	matador red	91-		
	D35	carrara grey	91-		
	J25	sherwood green	91-		
(22)	964 555 091 41	rear covering leather	/L -93	1	TARGA
	LG7	burgundy	-90		
	TV1	mahogany	-90		
	KZ2	black	-90		
	TS1	marine blue	-90		
	XN6	velvet red	-90		
	XN7	slate grey	-90		
	UD5	caramel	-90		
	UD6	venetian blue	-90		
	8YR	black	91-		
	6XL	classic grey	91-		
	9YL	cobalt blue	91-		
	6YL	magenta	91-		
	H05	marine blue	91-		
	M05	matador red	91-		
	D35	carrara grey	91-		
	J25	sherwood green	91-		
(22)	964 555 092 41	rear covering leather	/R -93	1	TARGA
	LG7	burgundy	-90		
	TV1	mahogany	-90		
	KZ2	black	-90		
	TS1	marine blue	-90		
	XN6	velvet red	-90		
	XN7	slate grey	-90		
	UD5	caramel	-90		
	UD6	venetian blue	-90		
	8YR	black	91-		
	6XL	classic grey	91-		
	9YL	cobalt blue	91-		
	6YL	magenta	91-		
	H05	marine blue	91-		
	M05	matador red	91-		
	D35	carrara grey	91-		
	J25	sherwood green	91-		
(22)	964 555 091 03	rear covering leather	/L	1	COUPE:
	E38	rubicon grey	93		M 096

Pos	Part Number	Name	Remarks	Qty	Model
22	964 555 092 03	rear covering leather	/R	1	COUPE:
	E38	rubicon grey	93		M 096
23	999 591 338 02	speed nut B 3,5		4	
24	900 145 071 07	tapping screw B 3,5 X 13		6	COUPE
24	900 145 071 07	tapping screw B 3,5 X 13	-93	4	TARGA
25	999 591 102 17	washer 3,5		6	COUPE
25	999 591 102 17	washer 3,5	-93	4	TARGA
26	901 552 871 40	cover		2	
27	900 025 003 02	washer A 5,3		2	
28	N 011 005 14	hexagon nut M 5		2	
29	901 552 872 20	coat hook		2	
		- -- E N D -- -			

Pos	Part Number	Name	Remarks	Qty	Model

Model	Year	MG	SG	Illustration	Restrictions	Update	18:05	24.11.2005	PORSCHE PET PORSCHE
964	94	8	07	807-06		194			

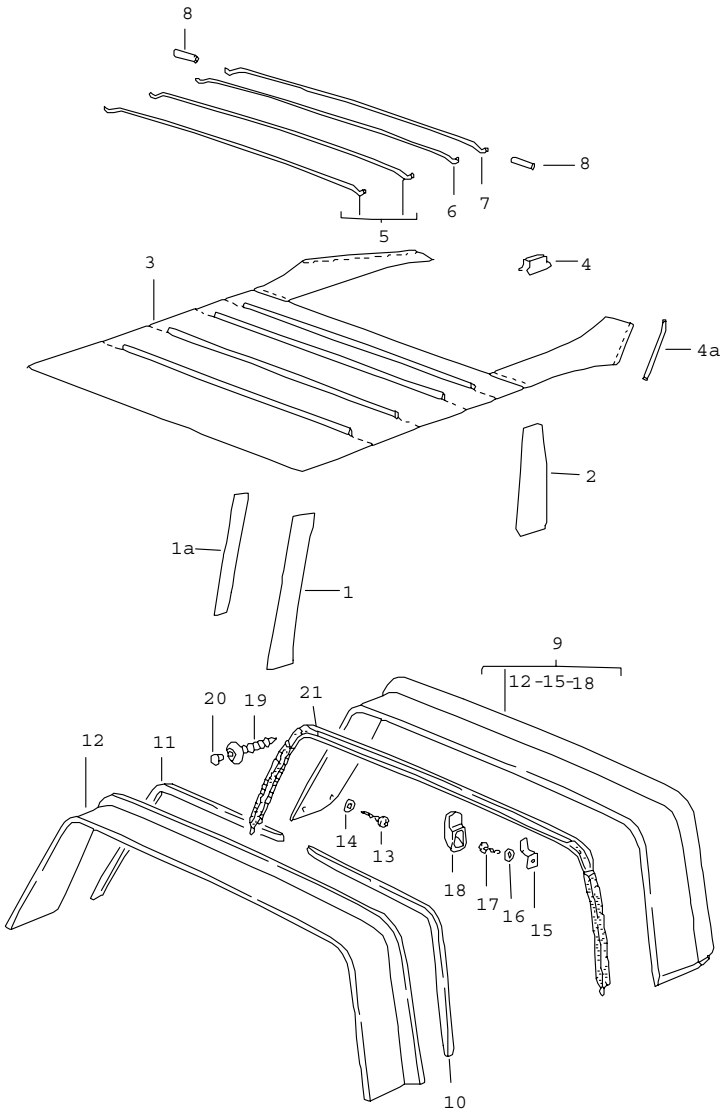

Pos	Part Number	Name	Remarks	Qty	Model
		interior equipment roof roll bar	-93		COUPE TARGA
1	964 555 507 00	lining windscreen frame part	/L	1	COUPE
	702	black			
	05T	black	91-		
	1MX	mahogany	-90		
	3MX	burgundy	-90		
	1KX	marine blue			
	2WJ	classic grey	91-		
	9ZH	cobalt blue	91-		
	4WY	magenta	91-		
	5TP	rubicon grey	93		M 096
(1)	964 555 508 00	lining windscreen frame part	/R	1	COUPE
	702	black			
	05T	black	91-		
	1MX	mahogany	-90		
	3MX	burgundy	-90		
	1KX	marine blue			
	2WJ	classic grey	91-		
	9ZH	cobalt blue	91-		
	4WY	magenta	91-		
	5TP	rubicon grey	93		M 096
1A	964 555 563 00	desk pad 5 X 35 X 400		2	COUPE
2	911 555 505 01	lining door pillar	/L	1	COUPE
	702	black			
	05T	black			
	1MX	mahogany	-90		

Pos	Part Number	Name	Remarks	Qty	Model
	3MX	burgundy	-90		
	1KX	marine blue			
	2WJ	classic grey	91-		
	9ZH	cobalt blue	91-		
	4WY	magenta	91-		
	5TP	rubicon grey	93		M 096
(2)	911 555 506 01	lining door pillar	/R	1	COUPE
	702	black			
	05T	black			
	1MX	mahogany	-90		
	3MX	burgundy	-90		
	1KX	marine blue			
	2WJ	classic grey	91-		
	9ZH	cobalt blue	91-		
	4WY	magenta	91-		
	5TP	rubicon grey	93		M 096
3	964 555 055 00	roof lining for cars without sunroof		1	COUPE
	700	black			
	8LC	burgundy	-90		
	1MX	mahogany	-90		
	1KX	marine blue			
	4WH	classic grey	91-		
	2YR	cobalt blue	91-		
	5VW	magenta	91-		
	1SY	rubicon grey	93		M 096
(3)	911 555 055 15	roof lining for cars with sunroof		1	COUPE:M 650
	700	black			
	8LC	burgundy	-90		
	1MX	mahogany	-90		
	1KX	marine blue			
	4WH	classic grey	91-		
	2YR	cobalt blue	91-		
	5VW	magenta	91-		
	1SY	rubicon grey	93		M 096
4	999 591 336 01	clamp 1,5 - 1,75	/H	10	COUPE
(4)	999 591 342 02	u-clamp 2,5 - 3	/V	8	COUPE
4A	911 555 561 00	tension wire		2	COUPE
5	901 555 511 20	transverse strut 1 + 2		2	COUPE
6	901 555 512 20	transverse strut 3		1	COUPE
7	901 555 513 20	transverse strut 4		1	COUPE
8	644 555 515 00	rubber profile		8	COUPE
9	964 565 019 00	interior lining		1	TARGA
	702	black			
10	911 565 513 40	padding	/L	1	TARGA
11	911 565 514 40	padding	/R	1	TARGA
(12)	901 565 511 40	cover padding		1	TARGA
12	901 565 128 43	cover		1	TARGA
	702	black interior lining			
13	N 014 086 4	tapping screw B 3,5 X 13		4	TARGA
14	999 591 010 12	washer 3,5		4	TARGA
15	901 552 872 20	coat hook		2	TARGA

Pos	Part Number	Name	Remarks	Qty	Model	Pos	Part Number	Name	Remarks	Qty	Model
16	N 012 130 2	shake-proof washer A 5,3		2	TARGA						
17	N 013 968 7	tapping screw B 4,8 X 13		2	TARGA						
18	901 552 871 40	cover		2	TARGA						
19	999 703 186 40	plastic plug $=6,9-7,1		4	TARGA						
20	999 591 384 40	cap 4,2 X 8 X 5		4	TARGA						
21	911 565 091 47	seal		1	TARGA						
	8VB	black roll bar									
		- -- E N D -- -									

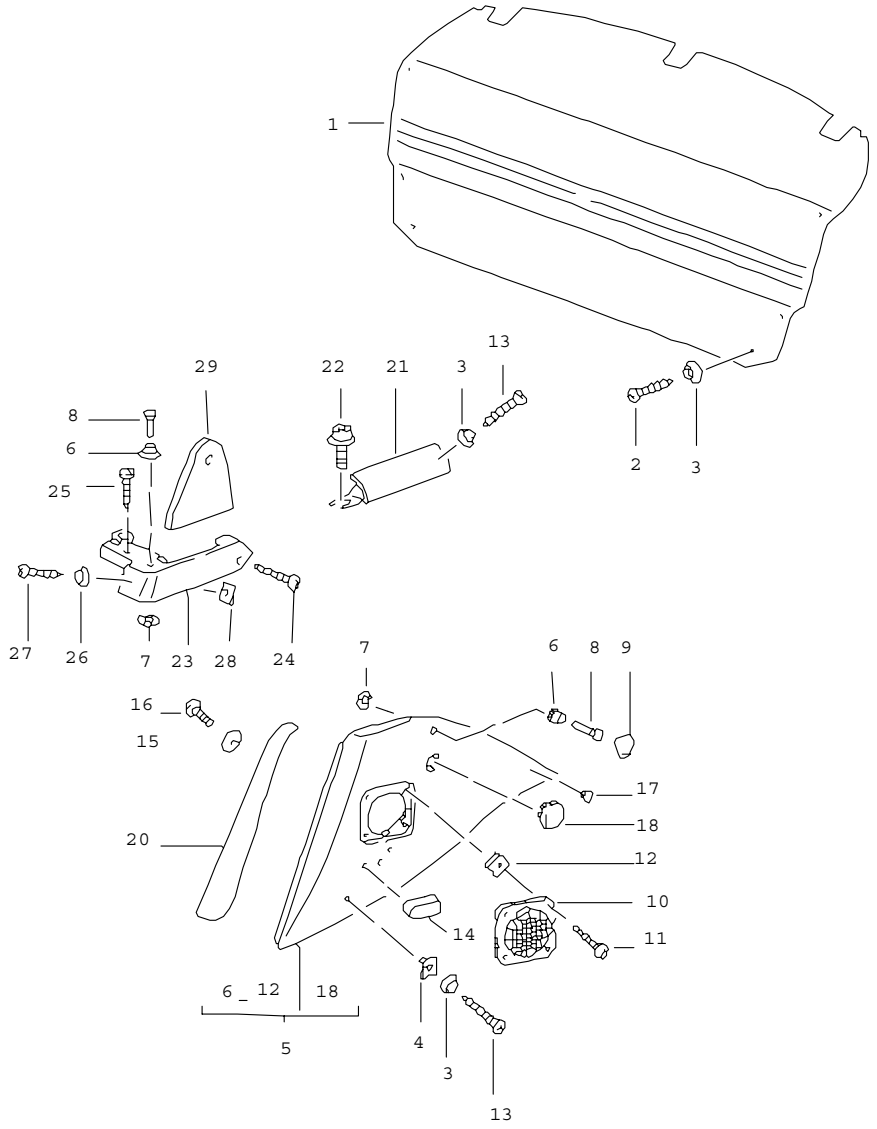

Pos	Part Number	Name	Remarks	Qty	Model
		interior equipment rear			CABRIO/ SPEEDSTER
(1)	964 555 075 61	back wall lining carpet		1	CABRIO
	5FV	black			
	5MF	mahogany	-90		
	4KV	marine blue			
	8MD	burgundy	-90		
	2XF	linen	-90		
	8UT	cashmere beige			
	7VT	silk grey	-90		
	9MT	velvet red	-90		
	3WT	slate grey	-90		
	5UM	caramel	-90		
	3KM	venetian blue	-90		
	4XR	classic grey	91-		
	4ZN	cobalt blue	91-		
	8WZ	magenta	91-		
	6YR	light grey	91-		
	M33	matador red	91-		
	D13	carrara grey	91-		
	J23	sherwood green	91-		
	M10	rhodamine	92		
	K20	wimbledon green	92		
	D50	florentine grey	92		
2	N 014 086 12	tapping screw B 3,5 X 13		2	CABRIO
3	999 591 116 07	cone washer		6	CABRIO
4	999 507 020 02	speed nut B 4,2		2	CABRIO
(5)	964 555 071 62	side trim panel carpet	/L	1	CABRIO

Pos	Part Number	Name	Remarks	Qty	Model
	5FV	black			
	5MF	mahogany	-90		
	4KV	marine blue			
	8MD	burgundy	-90		
	2XF	linen	-90		
	8UT	cashmere beige			
	7VT	silk grey	-90		
	9MT	velvet red	-90		
	3WT	slate grey	-90		
	5UM	caramel	-90		
	3KM	venetian blue	-90		
	4XR	classic grey	91-		
	4ZN	cobalt blue	91-		
	8WZ	magenta	91-		
	6YR	light grey	91-		
	M33	matador red	91-		
	D13	carrara grey	91-		
	J23	sherwood green	91-		
	M10	rhodamine	92		
	K20	wimbledon green	92		
	D50	florentine grey	92		
5	964 555 072 62	side trim panel carpet	/R	1	CABRIO
	5FV	black			
	5MF	mahogany	-90		
	4KV	marine blue			
	8MD	burgundy	-90		
	2XF	linen	-90		
	8UT	cashmere beige			
	7VT	silk grey	-90		
	9MT	velvet red	-90		
	3WT	slate grey	-90		
	5UM	caramel	-90		
	3KM	venetian blue	-90		
	4XR	classic grey	91-		
	4ZN	cobalt blue	91-		
	8WZ	magenta	91-		
	6YR	light grey	91-		
	M33	matador red	91-		
	D13	carrara grey	91-		
	J23	sherwood green	91-		
	M10	rhodamine	92		
	K20	wimbledon green	92		
	D50	florentine grey	92		
(5)	964 555 071 64	side trim panel carpet	/L	1	SPEEDSTER
	5FV	black			
(5)	964 555 072 64	side trim panel carpet	/R	1	SPEEDSTER
	5FV	black			
6	999 591 835 17	snap fastener lower part		4	
7	900 025 001 02	washer A 3,2		4	
8	999 190 162 37	blind rivet B 3,2 X 12,6		4	
9	911 561 434 00	cap		2	
	70B	black			
10	928 645 423 00	loudspeaker grille		2	
11	900 143 132 07	tapping screw B 3,9 X 16		8	
12	999 507 071 00	speed nut B 3,9		8	

Pos	Part Number	Name	Remarks	Qty	Model
13	N 014 093 3	tapping screw 4,2 X 13		4	CABRIO
14	477 857 375 A	support for seatbelt		2	CABRIO
	01C	black			
15	900 151 027 02	washer B 5,3		4	CABRIO
16	N 014 129 6	oval-head screw M 5 X 10		4	CABRIO
17	N 900 685 01	push button		2	
18	911 555 523 66	cap		2	CABRIO
	70B	black for emergency control			
(20)	911 555 757 40	cover lock pillar leatherette	/L	1	
	05T	black			
	1MX	mahogany	90		
	1KX	marine blue			
	3MK	burgundy	90		
	4WX	linen	90		
	7RT	cashmere beige			
	2WJ	classic grey	91-		
	9ZH	cobalt blue	91-		
	4WY	magenta	91-		
	1ZU	light grey	91-		
20	911 555 758 40	cover lock pillar leatherette	/R	1	
	05T	black			
	1MX	mahogany	90		
	1KX	marine blue			
	3MK	burgundy	90		
	4WX	linen	90		
	7RT	cashmere beige			
	2WJ	classic grey	91-		
	9ZH	cobalt blue	91-		
	4WY	magenta	91-		
	1ZU	light grey	91-		
(20)	911 555 757 75	cover lock pillar leather	/L	1	
	1AJ	black	90		
	2LX	mahogany	90		
	7JX	marine blue	90		
	7VX	linen	90		
	7LD	burgundy	90		
	2WH	cashmere beige	90		
	5VT	silk grey	90		
	2WT	slate grey	90		
	4MT	velvet red	90		
	4UC	caramel	90		
	7KC	venetian blue	90		
	8YR	black	91-		
	6XL	classic grey	91-		
	9YL	cobalt blue	91-		
	6YL	magenta	91-		
	8ZL	light grey	91-		
	4YU	cashmere beige	91-		
	H05	marine blue	91-		
	M05	matador red	91-		
	D35	carrara grey	91-		
	J25	sherwood green	91-		
	L37	rhodamine	92		

Pos	Part Number	Name	Remarks	Qty	Model
	J17	wimbledon green	92		
	E27	florentine grey	92		
20	911 555 758 75	cover lock pillar leather	/R	1	
	1AJ	black	90		
	2LX	mahogany	90		
	7JX	marine blue	90		
	7VX	linen	90		
	7LD	burgundy	90		
	2WH	cashmere beige	90		
	5VT	silk grey	90		
	2WT	slate grey	90		
	4MT	velvet red	90		
	4UC	caramel	90		
	7KC	venetian blue	90		
	8YR	black	91-		
	6XL	classic grey	91-		
	9YL	cobalt blue	91-		
	6YL	magenta	91-		
	8ZL	light grey	91-		
	4YU	cashmere beige	91-		
	H05	marine blue	91-		
	M05	matador red	91-		
	D35	carrara grey	91-		
	J25	sherwood green	91-		
	L37	rhodamine	92		
	J17	wimbledon green	92		
	E27	florentine grey	92		
21	911 555 077 60	rear covering leatherette	/L	1	CABRIO

Pos	Part Number	Name	Remarks	Qty	Model
	700	black			
(21)	911 555 078 60	rear covering leatherette	/R	1	CABRIO
	700	black			
22	900 067 271 09	screw M 8 X 20		2	CABRIO
23	964 555 763 60	cover	/L	1	CABRIO
	01C	black			
(23)	964 555 764 60	cover	/R	1	CABRIO
	01C	black			
(23)	964 555 763 62	cover	/L	1	SPEEDSTER
	01C	black			
(23)	964 555 764 62	cover	/R	1	SPEEDSTER
	01C	black			
24	900 143 085 07	tapping screw B 4,2 X 16		2	
25	900 144 028 07	tapping screw B 3,5 X 13		2	
26	999 591 102 17	washer 3,5		2	CABRIO
27	900 144 031 07	counters. head tapp. screw B 3,5 X 16		2	CABRIO
28	999 591 460 02	speed nut B 3,5		2	CABRIO
(29)	964 555 181 00	cover	/L	1	SPEEDSTER
	2XW	black			
29	964 555 182 00	cover	/R	1	SPEEDSTER
	2XW	black			
		- -- E N D -- -			

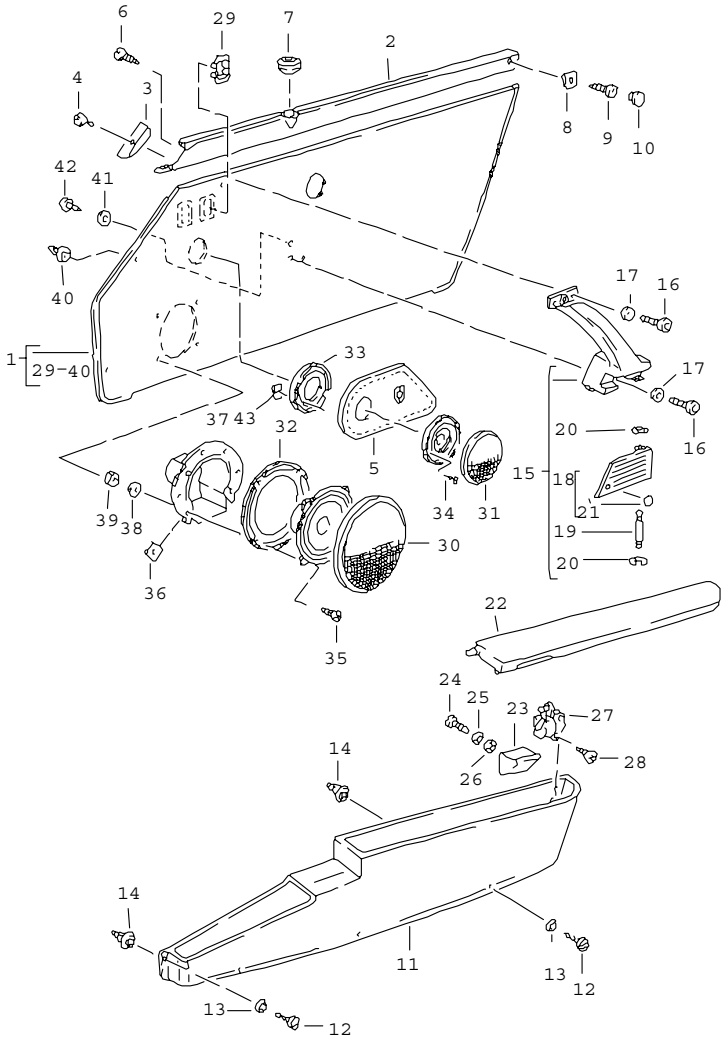

Pos	Part Number	Name	Remarks	Qty	Model
		interior equipment doors			CARRERA 2/4/ TURBO-LOOK TURBO CARRERA RS: M 002
(1)	911 555 031 45	door trim panel leatherette	/L -92	1	
	3MK	burgundy	-90		
	4WX	linen	-90		
	05T	black			
	1MX	mahogany	-90		
	1KX	marine blue			
	7RT	cashmere beige			
	2WJ	classic grey	91-		
	9ZH	cobalt blue	91-		
	4WY	magenta	91-		
	1ZU	light grey	91-		
1	911 555 032 44	door trim panel leatherette	/R -92	1	
	3MK	burgundy	-90		
	4WX	linen	-90		
	05T	black			
	1MX	mahogany	-90		
	1KX	marine blue			
	7RT	cashmere beige			
	2WJ	classic grey	91-		
	9ZH	cobalt blue	91-		
	4WY	magenta	91-		
	1ZU	light grey	91-		
(1)	911 555 031 45	door trim panel leatherette	/L 93-	1	COUPE
	05T	black			
	1KX	marine blue			

Pos	Part Number	Name	Remarks	Qty	Model
	7RT	cashmere beige			
	2WJ	classic grey			
	9ZH	cobalt blue			
	4WY	magenta			
	1ZU	light grey			
1	911 555 032 44	door trim panel leatherette	/R 93-	1	COUPE
	05T	black			
	1KX	marine blue			
	7RT	cashmere beige			
	2WJ	classic grey			
	9ZH	cobalt blue			
	4WY	magenta			
	1ZU	light grey			
(1)	964 555 031 06	door trim panel leatherette	/L 93-	1	TARGA/CABRIO
	05T	black			
	1KX	marine blue			
	7RT	cashmere beige			
	2WJ	classic grey			
	9ZH	cobalt blue			
	4WY	magenta			
	1ZU	light grey			
(1)	964 555 032 05	door trim panel leatherette	/R 93-	1	TARGA/CABRIO
	05T	black			
	1KX	marine blue			
	7RT	cashmere beige			
	2WJ	classic grey			
	9ZH	cobalt blue			
	4WY	magenta			
	1ZU	light grey			
(1)	911 555 031 56	door trim panel leather	/L -92	1	
	LG7	burgundy	-90		
	TW1	linen	-90		
	KZ2	black	-90		
	XN4	cashmere beige	-90		
	TV1	mahogany	-90		
	XN5	silk grey	-90		
	TS1	marine blue	-90		
	XN6	velvet red	-90		
	UD5	caramel	-90		
	XN7	slate grey	-90		
	UD6	venetian blue	-90		
	8YR	black	91-		
	6XL	classic grey	91-		
	9YL	cobalt blue	91-		
	6YL	magenta	91-		
	8ZL	light grey	91-		
	4YU	cashmere beige	91-		
	H05	marine blue	91-		
	M05	matador red	91-		
	D35	carrara grey	91-		
	J25	sherwood green	91-		
	L37	rhodamine	92		
	J17	wimbledon green	92		
	E27	florentine grey	92		
(1)	911 555 032 55	door trim panel leather	/R -92	1	
	LG7	burgundy	-90		

Pos	Part Number	Name	Remarks	Qty	Model
	TW1	linen	-90		
	KZ2	black	-90		
	XN4	cashmere beige	-90		
	TV1	mahogany	-90		
	XN5	silk grey	-90		
	TS1	marine blue	-90		
	XN6	velvet red	-90		
	UD5	caramel	-90		
	XN7	slate grey	-90		
	UD6	venetian blue	-90		
	8YR	black	91-		
	6XL	classic grey	91-		
	9YL	cobalt blue	91-		
	6YL	magenta	91-		
	8ZL	light grey	91-		
	4YU	cashmere beige	91-		
	H05	marine blue	91-		
	M05	matador red	91-		
	D35	carrara grey	91-		
	J25	sherwood green	91-		
	L37	rhodamine	92		
	J17	wimbledon green	92		
	E27	florentine grey	92		
(1)	911 555 031 56	door trim panel leather	/L 93-	1	COUPE
	8YR	black			
	6XL	classic grey			
	9YL	cobalt blue			
	6YL	magenta			
	8ZL	light grey			
	4YU	cashmere beige			
	H05	marine blue			
	M05	matador red			
	D35	carrara grey			
	J25	sherwood green			
1	911 555 032 55	door trim panel leather	/R 93-	1	COUPE
	8YR	black			
	6XL	classic grey			
	9YL	cobalt blue			
	6YL	magenta			
	8ZL	light grey			
	4YU	cashmere beige			
	H05	marine blue			
	M05	matador red			
	D35	carrara grey			
	J25	sherwood green			
(1)	964 555 031 10	door trim panel leather	/L 93-	1	TARGA/CABRIO
	8YR	black			
	6XL	classic grey			
	9YL	cobalt blue			
	6YL	magenta			
	8ZL	light grey			
	4YU	cashmere beige			
	H05	marine blue			
	M05	matador red			
	D35	carrara grey			
	J25	sherwood green			
(1)	964 555 032 09	door trim panel leather	/R 93-	1	TARGA/CABRIO

Pos	Part Number	Name	Remarks	Qty	Model
	8YR	black			
	6XL	classic grey			
	9YL	cobalt blue			
	6YL	magenta			
	8ZL	light grey			
	4YU	cashmere beige			
	H05	marine blue			
	M05	matador red			
	D35	carrara grey			
	J25	sherwood green			
(1)	911 555 031 56	door trim panel leather	/L	1	COUPE:M 096
	E38	rubicon grey	93		
(1)	911 555 032 55	door trim panel leather	/R	1	COUPE:M 096
	E38	rubicon grey	93		
(1)	911 555 031 47	door trim panel all-cloth pin stripe velour	/L -92 -90	1	
	7BN	black-white			
	6LN	mahogany-white			
	8GJ	blue-white			
	4WJ	linen white			
	1MJ	burgundy-white			
	4TN	cashmere beige-white			
(1)	911 555 032 46	door trim panel all-cloth pin stripe velour	/R -92 -90	1	
	7BN	black-white			
	6LN	mahogany-white			
	8GJ	blue-white			
	4WJ	linen white			
	1MJ	burgundy-white			
	4TN	cashmere beige-white			
(1)	911 555 031 47	door trim panel multicolour	/L -92	1	
	2VV	black			
	8XV	mahogany	-90		
	9JV	marine blue			
	9WT	classic grey	91-		
	9YD	cobalt blue	91-		
	1MV	burgundy			
	6UV	linen			
	5TC	cashmere beige			
(1)	911 555 032 46	door trim panel multicolour	/R -92	1	
	2VV	black			
	8XV	mahogany	-90		
	9JV	marine blue			
	9WT	classic grey	91-		
	9YD	cobalt blue	91-		
	1MV	burgundy			
	6UV	linen			
	5TC	cashmere beige			
(1)	911 555 031 47	door trim panel porsche lettering cloth	/L -92	1	
	2CZ	black			
	4MR	mahogany	-90		
	6HZ	blue			
	5WZ	linen	-90		
	5LZ	burgundy	-90		
	7TH	cashmere beige			
	6WC	classic grey	91-		

Pos	Part Number	Name	Remarks	Qty	Model
	7ZK	cobalt blue	91-		
	9YC	magenta	91-		
	2ZV	light grey	91-		
(1)	911 555 032 46	door trim panel porsche lettering cloth	/R -92	1	
	2CZ	black			
	4MR	mahogany	-90		
	6HZ	blue			
	5WZ	linen	-90		
	5LZ	burgundy	-90		
	7TH	cashmere beige			
	6WC	classic grey	91-		
	7ZK	cobalt blue	91-		
	9YC	magenta	91-		
	2ZV	light grey	91-		
(1)	911 555 031 47	door trim panel all-cloth multicolour	/L 93-	1	COUPE
	2VV	black			
	9JV	marine blue			
	9WT	classic grey			
	9YD	cobalt blue			
	1MV	burgundy			
	6UV	linen			
	5TC	cashmere beige			
(1)	911 555 032 46	door trim panel all-cloth multicolour	/R 93-	1	COUPE
	2VV	black			
	9JV	marine blue			
	9WT	classic grey			
	9YD	cobalt blue			

Pos	Part Number	Name	Remarks	Qty	Model
	1MV	burgundy			
	6UV	linen			
	5TC	cashmere beige			
(1)	964 555 031 08	door trim panel all-cloth multicolour	/L 93-	1	TARGA/CABRIO
	2VV	black			
	9JV	marine blue			
	9WT	classic grey			
	9YD	cobalt blue			
	1MV	burgundy			
	6UV	linen			
	5TC	cashmere beige			
(1)	964 555 032 07	door trim panel all-cloth multicolour	/R 93-	1	TARGA/CABRIO
	2VV	black			
	9JV	marine blue			
	9WT	classic grey			
	9YD	cobalt blue			
	1MV	burgundy			
	6UV	linen			
	5TC	cashmere beige			
(1)	911 555 031 47	door trim panel porsche lettering cloth	/L 93-	1	COUPE
	2CZ	black			
	6HZ	blue			
	7TH	cashmere beige			
	6WC	classic grey			
	7ZK	cobalt blue			
	9YC	magenta			
	2ZV	light grey			

Pos	Part Number	Name	Remarks	Qty	Model
(1)	911 555 032 46	door trim panel porsche lettering cloth	/R 93-	1	COUPE
	2CZ	black			
	6HZ	blue			
	7TH	cashmere beige			
	6WC	classic grey			
	7ZK	cobalt blue			
	9YC	magenta			
	2ZV	light grey			
(1)	964 555 031 08	door trim panel porsche lettering cloth	/L 93-	1	TARGA/CABRIO
	2CZ	black			
	6HZ	blue			
	7TH	cashmere beige			
	6WC	classic grey			
	7ZK	cobalt blue			
	9YC	magenta			
	2ZV	light grey			
(1)	964 555 032 07	door trim panel porsche lettering cloth	/R 93-	1	TARGA/CABRIO
	2CZ	black			
	6HZ	blue			
	7TH	cashmere beige			
	6WC	classic grey			
	7ZK	cobalt blue			
	9YC	magenta			
	2ZV	light grey			
(2)	911 555 083 08	cover strip leatherette	/L	1	
	7AE	black	89		
	05T	black	90-		
	1MX	mahogany	-90		
	1KX	marine blue			
	3MX	burgundy	-90		
	9WH	classic grey	91-		
	7YG	cobalt blue	91-		
	9YF	magenta	91-		
2	911 555 084 07	cover strip leatherette	/R	1	
	7AE	black	89		
	05T	black	90-		
	1MX	mahogany	-90		
	1KX	marine blue			
	3MX	burgundy	-90		
	9WH	classic grey	91-		
	7YG	cobalt blue	91-		
	9YF	magenta	91-		
(2)	911 555 083 62	cover strip leather	/L	1	
	KZ2	black	-90		
	TV1	mahogany	-90		
	TS1	marine blue	-90		
	LG7	burgundy	-90		
	XN6	velvet red	-90		
	XN7	slate grey	-90		
	UD5	caramel	-90		
	UD6	venetian blue	-90		
	8YR	black	91-		
	6XL	classic grey	91-		
	9YL	cobalt blue	91-		
	6YL	magenta	91-		

Pos	Part Number	Name	Remarks	Qty	Model
	H05	marine blue	91-		
	M05	matador red	91-		
	D35	carrara grey	91-		
	J25	sherwood green	91-		
	L37	rhodamine	92		
	J17	wimbledon green	92		
	E27	florentine grey	92		
	E38	rubicon grey	93		M 096
2	911 555 084 61	cover strip leather	/R	1	
	KZ2	black	-90		
	TV1	mahogany	-90		
	TS1	marine blue	-90		
	LG7	burgundy	-90		
	XN6	velvet red	-90		
	XN7	slate grey	-90		
	UD5	caramel	-90		
	UD6	venetian blue	-90		
	8YR	black	91-		
	6XL	classic grey	91-		
	9YL	cobalt blue	91-		
	6YL	magenta	91-		
	H05	marine blue	91-		
	M05	matador red	91-		
	D35	carrara grey	91-		
	J25	sherwood green	91-		
	L37	rhodamine	92		
	J17	wimbledon green	92		
	E27	florentine grey	92		
	E38	rubicon grey	93		M 096

Pos	Part Number	Name	Remarks	Qty	Model
(3)	911 555 421 00	cap	/L	1	
	01C	black			
	4MJ	mahogany	89		
	9JJ	marine blue	89		
	9MM	burgundy	89		
3	911 555 422 00	cap	/R	1	
	01C	black			
	4MJ	mahogany	89		
	9JJ	marine blue	89		
	9MM	burgundy	89		
4	900 145 096 07	tapping screw B 4,2 X 16		2	
(5)	964 555 093 01	trim leather	/L 93-	1	TARGA/CABRIO
	8YR	black			
	6XL	classic grey			
	9YL	cobalt blue			
	6YL	magenta			
	8ZL	light grey			
	4YU	cashmere beige			
	H05	marine blue			
	M05	matador red			
	D35	carrara grey			
	J25	sherwood green			
5	964 555 094 01	trim leather	/R 93-	1	TARGA/CABRIO
	8YR	black			
	6XL	classic grey			
	9YL	cobalt blue			
	6YL	magenta			
	8ZL	light grey			

Pos	Part Number	Name	Remarks	Qty	Model
	4YU	cashmere beige			
	H05	marine blue			
	M05	matador red			
	D35	carrara grey			
	J25	sherwood green			
6	900 143 177 02	combination tapping screw B 4,2 X 13		4	
7	928 555 569 02	guide bush		2	
8	N 100 665 01	speed nut B 3,5		2	
9	N 013 958 7	tapping screw B 3,5 X 13		4	
10	999 703 077 40	cap		2	
(11)	911 555 037 06	package box carpet/ strap leatherette	/L	1	
	5FV	black/black			
	5MF	mahogany/mahogany	-90		
	4KV	marine blue/marine blue			
	8MD	burgundy/burgundy	-90		
	2XF	linen/linen	-90		
	8UT	cashmere beige/cash. beige			
	4XR	classic grey/classic grey	91-		
	4ZN	cobalt blue/cobalt blue	91-		
	8WZ	magenta/magenta	91-		
	6YR	light grey/light grey	91-		
11	911 555 038 06	package box carpet/ strap leatherette	/R	1	
	5FV	black/black			
	5MF	mahogany/mahogany	-90		
	4KV	marine blue/marine blue			
	8MD	burgundy/burgundy	-90		
	2XF	linen/linen	-90		
	8UT	cashmere beige/cash. beige			
	4XR	classic grey/classic grey	91-		
	4ZN	cobalt blue/cobalt blue	91-		
	8WZ	magenta/magenta	91-		
	6YR	light grey/light grey	91-		
(11)	911 555 037 05	package box carpet/ strap leather	/L	1	
	5FV	black/black			
	4KV	marine blue/marine blue			
	5MF	mahogany/mahogany	-90		
	8MD	burgundy/burgundy	-90		
	2XF	linen/linen	-90		
	8UT	cashmere beige/cash. beige			
	9MT	velvet red/velvet red	-90		
	3WT	slate grey/slate grey	-90		
	7VT	silk grey/silk grey	-90		
	5UM	caramel/caramel	-90		
	3KM	venetian bl./venetian blue	-90		
	4XR	classic grey/classic grey	91-		
	4ZN	cobalt blue/cobalt blue	91-		
	8WZ	magenta/magenta	91-		
	6YR	light grey/light grey	91-		
	M33	matador red/matador red	91-		
	D13	carrara grey/carrara grey	91-		
	J23	sherwood gr./sherw. green	91-		
	M10	rhodamine/rhodamine	92		
	K20	wimbledon gr./wimbl. green	92		

Pos	Part Number	Name	Remarks	Qty	Model
	D50	florentine gr./flor. grey	92		
	8AS	rubicon grey/rubicon grey	93		M 096
11	911 555 038 05	package box carpet/ strap leather	/R	1	
	5FV	black/black			
	4KV	marine blue/marine blue			
	5MF	mahogany/mahogany	-90		
	8MD	burgundy/burgundy	-90		
	2XF	linen/linen	-90		
	8UT	cashmere beige/cash. beige			
	9MT	velvet red/velvet red	-90		
	3WT	slate grey/slate grey	-90		
	7VT	silk grey/silk grey	-90		
	5UM	caramel/caramel	-90		
	3KM	venetian bl./venetian blue	-90		
	4XR	classic grey/classic grey	91-		
	4ZN	cobalt blue/cobalt blue	91-		
	8WZ	magenta/magenta	91-		
	6YR	light grey/light grey	91-		
	M33	matador red/matador red	91-		
	D13	carrara grey/carrara grey	91-		
	J23	sherwood gr./sherw. green	91-		
	M10	rhodamine/rhodamine	92		
	K20	wimbledon gr./wimbl. green	92		
	D50	florentine gr./flor. grey	92		
	8AS	rubicon grey/rubicon grey	93		M 096
12	900 145 026 07	tapping screw B 4,2 X 22		8	
13	999 591 103 17	protection washer		8	
14	999 591 717 40	expander nut B 4,2		10	
(15)	911 555 097 01	handle leatherette	/L	1	
	041	black			
	3LN	mahogany	-90		
	6JN	marine blue			
	3MK	burgundy	-90		
	8XN	linen	-90		
	2UU	cashmere beige			
	8WR	classic grey	91-		
	6XW	cobalt blue	91-		
	7XL	magenta	91-		
	6ZL	light grey	91-		
15	911 555 098 01	handle leatherette	/R	1	
	041	black			
	3LN	mahogany	-90		
	6JN	marine blue			
	3MK	burgundy	-90		
	8XN	linen	-90		
	2UU	cashmere beige			
	8WR	classic grey	91-		
	6XW	cobalt blue	91-		
	7XL	magenta	91-		
	6ZL	light grey	91-		
(15)	911 555 097 51	handle leather	/L	1	
	1AJ	black	-90		
	2LX	mahogany	-90		
	7JX	marine blue	-90		

Pos	Part Number	Name	Remarks	Qty	Model
	7LD	burgundy	-90		
	4UC	caramel	-90		
	7VX	linen	-90		
	2WH	cashmere beige	-90		
	5VT	silk grey	-90		
	4MT	velvet red	-90		
	2WT	slate grey	-90		
	7KC	venetian blue	-90		
	8YR	black	91-		
	6XL	classic grey	91-		
	9YL	cobalt blue	91-		
	6YL	magenta	91-		
	8ZL	light grey	91-		
	4YU	cashmere beige	91-		
	H05	marine blue	91-		
	M05	matador red	91-		
	D35	carrara grey	91-		
	J25	sherwood green	91-		
	L37	rhodamine	92		
	J17	wimbledon green	92		
	E27	florentine grey	92		
	E38	rubicon grey	93		M 096
15	911 555 098 51	handle leather	/R	1	
	1AJ	black	-90		
	2LX	mahogany	-90		
	7JX	marine blue	-90		
	7LD	burgundy	-90		
	4UC	caramel	-90		
	7VX	linen	-90		

Pos	Part Number	Name	Remarks	Qty	Model
	2WH	cashmere beige	-90		
	5VT	silk grey	-90		
	4MT	velvet red	-90		
	2WT	slate grey	-90		
	7KC	venetian blue	-90		
	8YR	black	91-		
	6XL	classic grey	91-		
	9YL	cobalt blue	91-		
	6YL	magenta	91-		
	8ZL	light grey	91-		
	4YU	cashmere beige	91-		
	H05	marine blue	91-		
	M05	matador red	91-		
	D35	carrara grey	91-		
	J25	sherwood green	91-		
	L37	rhodamine	92		
	J17	wimbledon green	92		
	E27	florentine grey	92		
	E38	rubicon grey	93		M 096
16	N 014 761 2	pan-head screw M 6 X 12		8	
17	N 011 524 7	washer A 6,4		8	
(18)	911 531 251 00	door opener	/L	1	
	70B	black			
18	911 531 252 00	door opener	/R	1	
	70B	black			
19	911 555 583 00	bolt		2	
20	900 116 002 01	lock washer		2	
21	928 537 747 00	luminous point		2	

Pos	Part Number	Name	Remarks	Qty	Model
(22)	911 555 039 03	cover lacquered	/L	1	
	041	black			
	3LN	mahogany	-90		
	6JN	marine blue			
	3MK	burgundy	-90		
	8XN	linen	-90		
	2UU	cashmere beige			
	2YJ	classic grey	91-		
	5ZJ	cobalt blue	91-		
	5XA	magenta	91-		
	B06	light grey	91-		
22	911 555 040 03	cover lacquered	/R	1	
	041	black			
	3LN	mahogany	-90		
	6JN	marine blue			
	3MK	burgundy	-90		
	8XN	linen	-90		
	2UU	cashmere beige			
	2YJ	classic grey	91-		
	5ZJ	cobalt blue	91-		
	5XA	magenta	91-		
	B06	light grey	91-		
(22)	911 555 039 52	cover leather	/L	1	
	1AJ	black	-90		
	2LX	mahogany	-90		
	7JX	marine blue	-90		
	7LD	burgundy	-90		
	4UC	caramel	-90		
	7VX	linen	-90		
	2WH	cashmere beige	-90		
	5VT	silk grey	-90		
	4MT	velvet red	-90		
	2WT	slate grey	-90		
	7KC	venetian blue	-90		
	8YR	black	91-		
	6XL	classic grey	91-		
	9YL	cobalt blue	91-		
	6YL	magenta	91-		
	8ZL	light grey	91-		
	4YU	cashmere beige	91-		
	H05	marine blue	91-		
	M05	matador red	91-		
	D35	carrara grey	91-		
	J25	sherwood green	91-		
	L37	rhodamine	92		
	J17	wimbledon green	92		
	E27	florentine grey	92		
	E38	rubicon grey	93		M 096
22	911 555 040 52	cover leather	/R	1	
	1AJ	black	-90		
	2LX	mahogany	-90		
	7JX	marine blue	-90		
	7LD	burgundy	-90		
	4UC	caramel	-90		
	7VX	linen	-90		
	2WH	cashmere beige	-90		
	5VT	silk grey	-90		

Pos	Part Number	Name	Remarks	Qty	Model
	4MT	velvet red	-90		
	2WT	slate grey	-90		
	7KC	venetian blue	-90		
	8YR	black	91-		
	6XL	classic grey	91-		
	9YL	cobalt blue	91-		
	6YL	magenta	91-		
	8ZL	light grey	91-		
	4YU	cashmere beige	91-		
	H05	marine blue	91-		
	M05	matador red	91-		
	D35	carrara grey	91-		
	J25	sherwood green	91-		
	L37	rhodamine	92		
	J17	wimbledon green	92		
	E27	florentine grey	92		
	E38	rubicon grey	93		M 096
23	914 555 059 10	support		2	
24	900 146 011 02	oval-head screw AM 4 X 10		2	
25	N 012 224 3	spring washer B 4		2	
26	900 151 028 02	washer B 4,3		2	
27	911 555 045 03	bearing	/L	1	
(27)	911 555 046 03	bearing	/R	1	
28	900 143 047 07	tapping screw B 4,2 X 19		4	
29	911 613 635 20	wiper frame		3	
30	911 555 451 00	loudspeaker grille		2	
	01C	black woofer			
31	911 555 453 00	loudspeaker grille		2	
	01C	black tweeter			
32	911 555 671 00	bracket woofer		2	
33	911 555 673 00	bracket tweeter		2	
34	900 143 124 07	tapping screw BZ 3,5 X 13		6	
35	N 013 967 9	tapping screw B 4,2 X 19		8	
36	999 591 575 02	speed nut B 4,2		8	
37	911 555 217 00	housing		2	
38	N 011 522 14	washer A 4,3		6	
39	N 011 004 6	hexagon nut M 4		6	
40	823 867 299	clip		8	
41	900 151 001 02	washer A 4,3		2	
42	N 013 958 7	tapping screw B 3,5 X 13		2	
43	N 900 488 01	speed nut B 3,5		6	
		- -- E N D -- -			

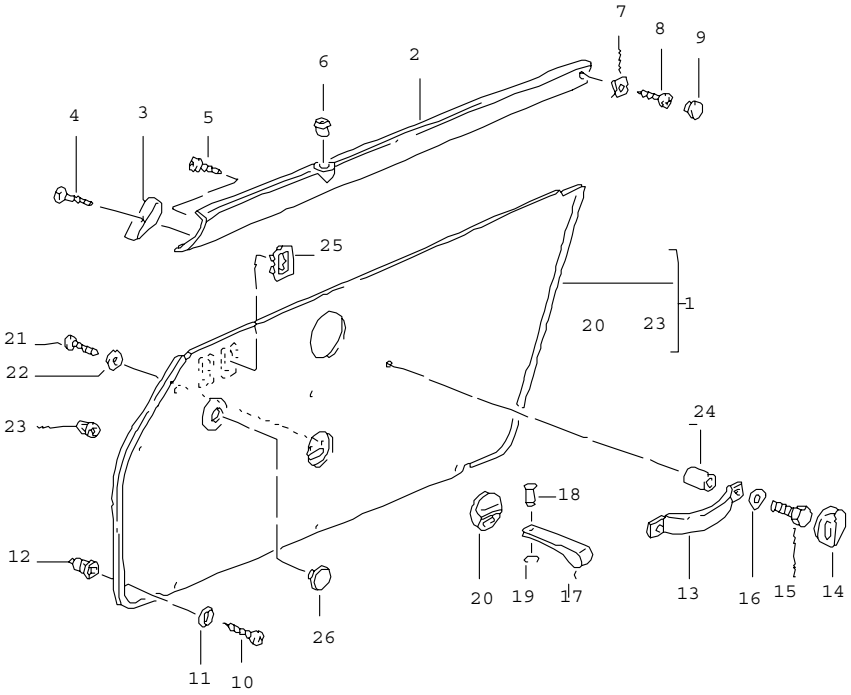

Pos	Part Number	Name	Remarks	Qty	Model
		interior equipment doors			CARRERA RS
(1)	964 555 031 00	door trim panel leatherette	/L	1	
	05T	black			
1	964 555 032 00	door trim panel leatherette	/R	1	
	05T	black			
(2)	911 555 083 08	cover strip leatherette	/L	1	
	05T	black			
2	911 555 084 07	cover strip leatherette	/R	1	
	05T	black			
(3)	911 555 421 00	cap	/L	1	
	01C	black			
3	911 555 422 00	cap	/R	1	
	01C	black			
4	900 145 096 07	tapping screw B 4,2 X 16		2	
5	900 143 177 02	combination tapping screw B 4,2 X 13		4	
6	928 555 569 02	guide bush		2	
7	N 100 665 01	speed nut B 3,5		2	
8	N 013 958 7	tapping screw B 3,5 X 13		2	
9	999 703 077 40	cap		2	
10	900 145 096 07	tapping screw B 4,2 X 16		10	
11	999 591 103 17	protection washer		10	
12	999 591 717 40	expander nut B 4,2		10	
13	964 555 251 00	handle		2	
	01C	black			

Pos	Part Number	Name	Remarks	Qty	Model
	8YR	black			
14	A 964 555 761 01	rose		4	
	01C	black			
14	964 555 761 02	rose		4	
	01C	black			
15	900 075 017 02	hexagon-head bolt M 6 X 25		4	
16	999 025 128 02	washer 6,5 X 14 X 1		4	
17	964 555 832 00	door opener		2	
	G33	rubystone red			
	H03	maritime blue			
	N13	guards red			
18	N 100 438 01	bolt		2	
19	999 166 040 02	kl-lock 5		2	
20	964 555 761 00	rose		2	
	01C	black			
21	999 919 104 02	oval-head screw 3,0 X 14		4	
22	900 151 028 02	washer B 4,3		4	
23	823 867 299	clip		8	
24	999 531 014 02	bush 6,1 X 10,2		2	
25	911 613 635 20	wiper frame		2	
26	999 703 404 40	cap		2	
	1DB	black			
		- -- E N D -- -			

Pos	Part Number	Name	Remarks	Qty	Model

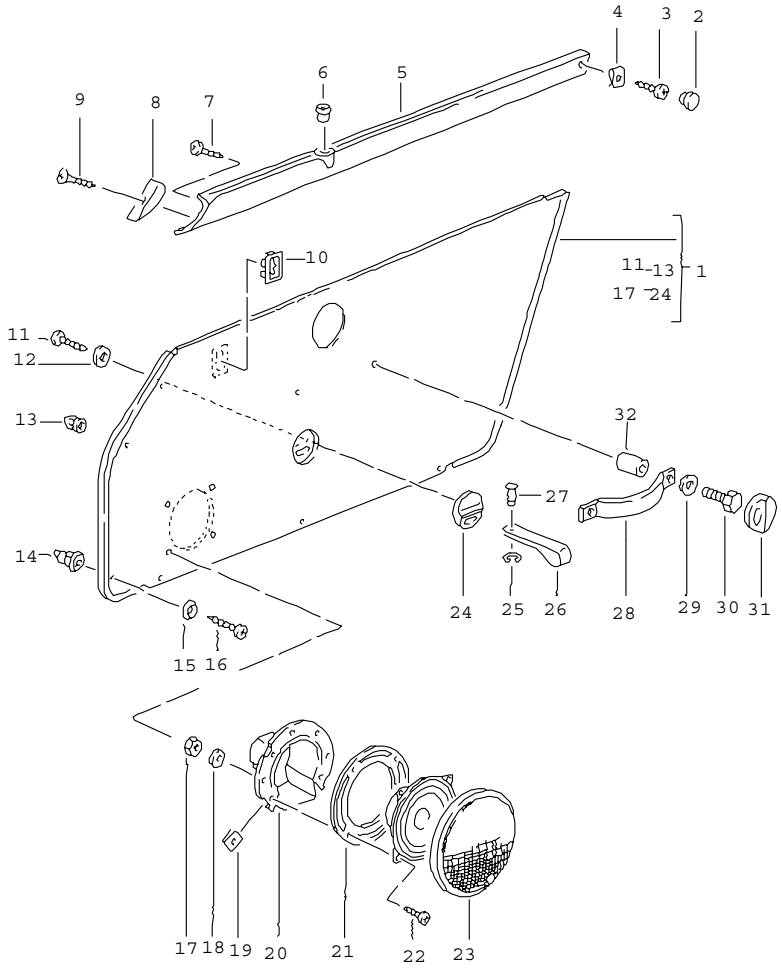

Pos	Part Number	Name	Remarks	Qty	Model
		interior equipment doors			SPEEDSTER
(1)	964 555 031 04	door trim panel leatherette	/L	1	
	05T	black			
1	964 555 032 02	door trim panel leatherette	/R	1	
	05T	black			
2	999 703 077 40	cap		2	
3	N 013 958 7	tapping screw B 3,5 X 13		2	
4	N 100 665 01	speed nut B 3,5		2	
(5)	964 555 083 01	cover strip leatherette	/L	1	
	05T	black			
(5)	964 555 084 01	cover strip leatherette	/R	1	
	05T	black			
6	928 555 569 02	guide bush		2	
7	900 143 177 02	combination tapping screw B 4,2 X 13		4	
(8)	911 555 421 00	cover	/L	1	
	01C	satin black			
8	911 555 422 00	cover	/R	1	
	01C	satin black			
9	900 145 096 07	oval-head sheetmetal screw B 4,2 X 16		2	
10	911 613 635 20	wiper frame		3	
11	999 919 049 02	oval-head sheetmetal screw B 3,0 X 10		4	
12	900 151 028 02	washer B 4,3		4	
13	823 867 299	clip		8	

Pos	Part Number	Name	Remarks	Qty	Model
14	999 591 717 40	expander nut B 4,2		10	
15	999 591 103 17	protection washer		10	
16	900 145 096 07	tapping screw B 4,2 X 16		10	
17	N 011 004 6	hexagon nut M 4		6	
18	900 025 002 02	washer A 4,3		6	
19	999 591 575 02	speed nut B 4,2		8	
(20)	911 555 217 01	housing		2	
21	911 555 671 00	bracket		2	
22	N 013 967 9	tapping screw B 4,2 X 19		8	
23	911 555 451 00	cover		2	
	01C	black			
24	964 555 761 00	rose		2	
	01C	satin black			
25	999 166 040 02	lock		2	
26	964 555 832 00	door opener		1	
	70A	black			
	N13	guards red			
	H03	maritime blue			
	V02	speed yellow			
27	N 100 438 01	bolt		2	
28	964 555 251 00	handle leather		2	
	01C	black			
	8YR	black			
	L29	guards red			
	2XR	pearl grey			
	G55	maritime blue			
	U28	speed yellow			
29	999 025 128 02	washer 6,5 X 14 X 1		4	
30	900 075 017 02	hexagon-head bolt M 6 X 25		4	
31	A 964 555 761 01	rose		4	
	01C	satin black			
31	964 555 761 02	rose		4	
	01C	satin black			
32	999 531 014 02	bush 6,1 X 10,2		2	

- -- E N D -- -

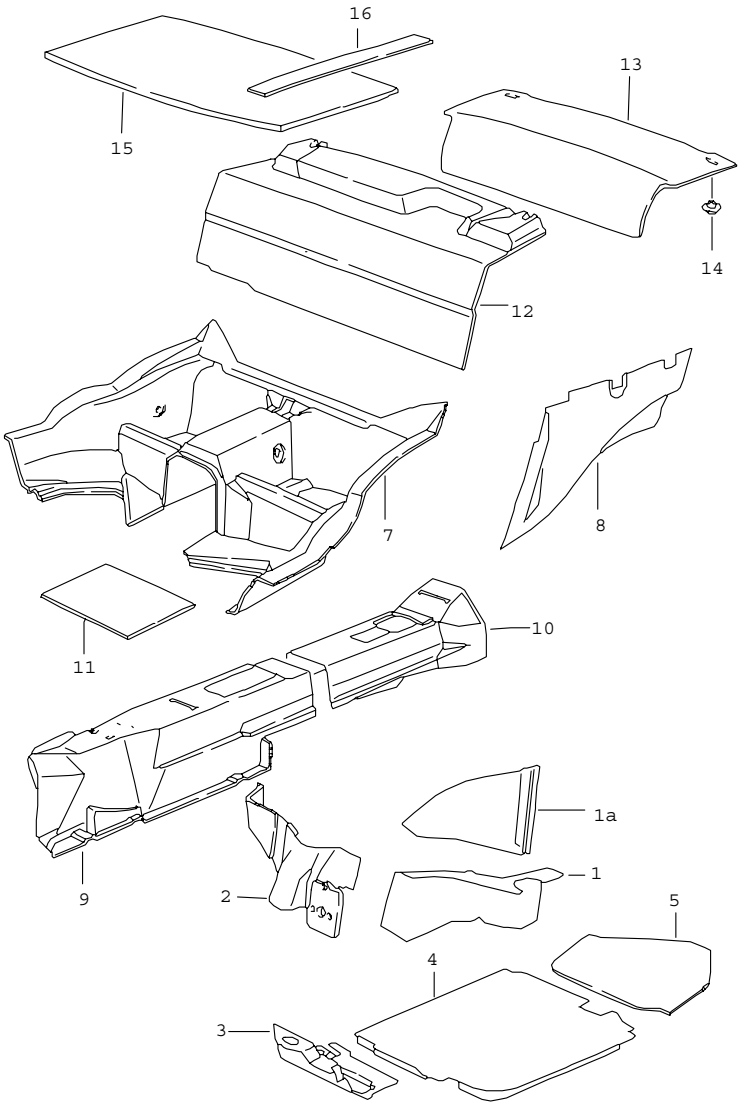

Pos	Part Number	Name	Remarks	Qty	Model
		body sound proofing 1			
1	964 556 205 00	sound absorber	/LL/L	1	
(1)	964 556 205 02	sound absorber	/RL/L	1	
(1)	964 556 206 02	sound absorber	/LL/R	1	
(1)	964 556 206 01	sound absorber side section	/RL/R /V	1	
1A	964 556 207 01	sound absorber	/LL/L	1	
(1A)	964 556 208 01	sound absorber side section upper	/RL/R /V	1	
2	A 964 556 261 00	sound absorber	/LL/L	1	
(2)	964 556 262 00	sound absorber firewall upper	/RL/R	1	
3	A 964 556 263 00	sound absorber	/LL/L	1	
(3)	964 556 264 01	sound absorber firewall lower	/RL/R	1	
4	964 556 217 00	sound absorber	/LL/L	1	
(4)	A 964 556 217 02	sound absorber	/RL/L-92	1	
(4)	964 556 217 02	sound absorber	/RL/L	1	
(4)	964 556 218 00	sound absorber	/LL/R-91	1	
(4)	964 556 218 02	sound absorber	/LL/R92-	1	
(4)	964 556 218 01	sound absorber	/RL/R-91	1	
(4)	964 556 218 03	sound absorber floor	/RL/R92- /V	1	
5	964 556 215 00	sound absorber	/L	1	
(5)	964 556 216 00	sound absorber floor	/R /H	1	
7	964 556 233 01	sound absorber seat well		1	
8	964 556 275 01	sound absorber	/L	1	COUPE
(8)	964 556 276 01	sound absorber side section it is necessary to rework	/R /H 89	1	COUPE

Pos	Part Number	Name	Remarks	Qty	Model
(9)	964 556 872 02	sound absorber	/LL/V	1	
(9)	964 556 872 03	sound absorber tunnel	/RL/V	1	
10	993 556 873 00	sound absorber tunnel rear		1	
11	911 556 902 00	damping mat		X	
12	964 556 239 00	damping mat	-90	1	COUPE/TARGA
12 A	964 556 239 01	damping mat	91-	1	COUPE/TARGA
(12)	993 556 239 02	damping mat upper part	91-	1	COUPE/TARGA
(12)	964 556 239 04	damping mat lower part	91-	1	COUPE/TARGA
(12)	964 556 239 02	damping mat	92	1	CARRERA RS
(12)	965 556 239 00	damping mat for rear panel	91-	1	TURBO
(12)	964 556 239 60	damping mat	90	1	CABRIO
(12)	993 556 239 03	sound absorber for rear panel	91-	1	CABRIO
13	964 556 281 01	sound absorber engine compartment		1	
14	999 049 011 40	push button T 5		10	
15	911 556 023 01	damping mat inner lining		1	
16	911 556 248 00	damping strip		3	
		- -- E N D -- -			

Model	Year	MG	SG	Illustration	Restrictions	Update	18:07	24.11.2005	PORSCHE PET PORSCHE
964	94	8	08	808-00		194			

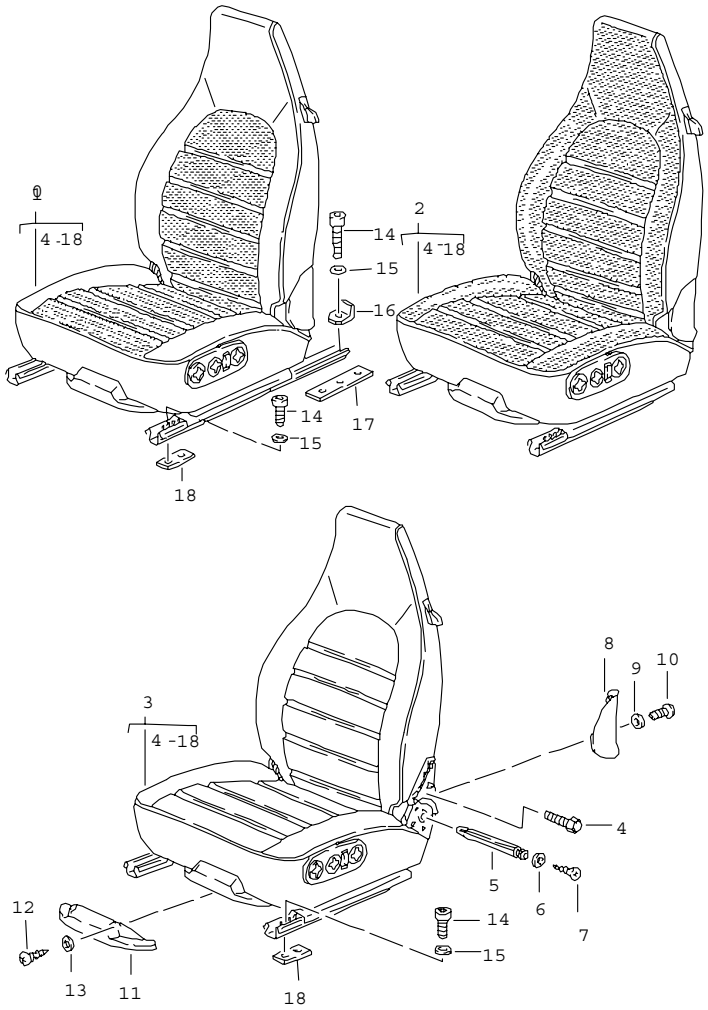

Pos	Part Number	Name	Remarks	Qty	Model
		seat complete group 8/08/00 - 8/08/61 see group 8/06/60 - 8/06/94 catalogue STZ.18 - -- E N D -- -			

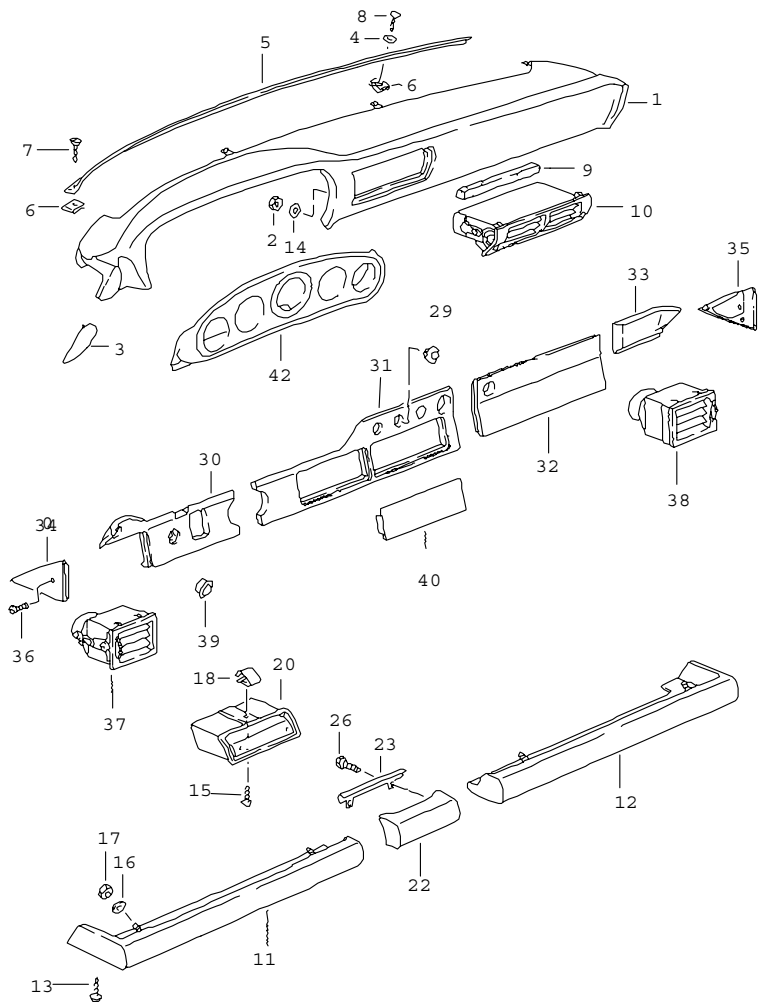

Pos	Part Number	Name	Remarks	Qty	Model
		dashboard knee protection strip for cars without airbag			
1	964 552 055 00	dashboard trim leatherette	/LL -91	1	
	7AE	black	89		
	05T	black	90-		
	1MX	mahogany	-90		
	3MX	burgundy	-90		
	1KX	marine blue			
	9WH	classic grey	91-		
	7YG	cobalt blue	91-		
	9YF	magenta	91-		
1	A 964 552 055 02	dashboard trim leatherette	/LL 92	1	
	05T	black	90-		
	1KX	marine blue			
	9WH	classic grey	91-		
	7YG	cobalt blue	91-		
	9YF	magenta	91-		
1	964 552 055 04	dashboard trim leatherette	/LL 92-	1	CARRERA/ TURBO
	05T	black	90-		
	1KX	marine blue			
	9WH	classic grey	91-		
	7YG	cobalt blue	91-		
	9YF	magenta	91-		
(1)	A 964 552 056 00	dashboard trim leatherette	/RL -91	1	
	7AE	black	89		
	05T	black	90-		

Pos	Part Number	Name	Remarks	Qty	Model
	1MX	mahogany	-90		
	3MX	burgundy	-90		
	1KX	marine blue			
	9WH	classic grey	91-		
	7YG	cobalt blue	91-		
	9YF	magenta	91-		
(1)	A 964 552 056 02	dashboard trim leatherette	/RL 92	1	
	05T	black	90-		
	1KX	marine blue			
	9WH	classic grey	91-		
	7YG	cobalt blue	91-		
	9YF	magenta	91-		
(1)	964 552 056 05	dashboard trim leatherette	/RL	1	CARRERA/ TURBO
	7AE	black	89		
	05T	black	90-		
	1MX	mahogany	-90		
	3MX	burgundy	-90		
	1KX	marine blue			
	9WH	classic grey	91-		
	7YG	cobalt blue	91-		
	9YF	magenta	91-		
(1)	964 552 055 06	dashboard trim leatherette	/LL	1	SPEEDSTER
	05T	black			
(1)	964 552 056 06	dashboard trim leatherette	/RL	1	SPEEDSTER
	05T	black			
1	A 964 552 055 01	dashboard trim leather	/LL -91	1	
	LG7	burgundy	-90		
	TV1	mahogany	-90		
	KZ2	black	-90		
	TS1	marine blue	-90		
	4MT	velvet red	-90		
	UD5	caramel	-90		
	2WT	slate grey	-90		
	UD6	venetian blue	-90		
	8YR	black	91-		
	6XL	classic grey	91-		
	9YL	cobalt blue	91-		
	6YL	magenta	91-		
	H05	marine blue	91-		
	M05	matador red	91-		
	D35	carrara grey	91-		
	J25	sherwood green	91-		
1	964 552 055 03	dashboard trim leather	/LL 92	1	
	8YR	black	91-		
	6XL	classic grey	91-		
	9YL	cobalt blue	91-		
	6YL	magenta	91-		
	H05	marine blue	91-		
	M05	matador red	91-		
	D35	carrara grey	91-		
	J25	sherwood green	91-		
	L37	rhodamine	92		
	J17	wimbledon green	92		
	E27	florentine grey	92		

Pos	Part Number	Name	Remarks	Qty	Model
1	964 552 055 51	dashboard trim leather	/LL 93-	1	CARRERA/ TURBO
	8YR	black	91-		
	6XL	classic grey	91-		
	9YL	cobalt blue	91-		
	6YL	magenta	91-		
	H05	marine blue	91-		
	M05	matador red	91-		
	D35	carrara grey	91-		
	J25	sherwood green	91-		
	E38	rubicon grey	93		M 096
(1)	A 964 552 056 01	dashboard trim leather	/RL -91	1	
	LG7	burgundy	-90		
	TV1	mahogany	-90		
	KZ2	black	-90		
	TS1	marine blue	-90		
	4MT	velvet red	-90		
	UD5	caramel	-90		
	2WT	slate grey	-90		
	UD6	venetian blue	-90		
	8YR	black	91-		
	6XL	classic grey	91-		
	9YL	cobalt blue	91-		
	6YL	magenta	91-		
	H05	marine blue	91-		
	M05	matador red	91-		
	D35	carrara grey	91-		
	J25	sherwood green	91-		

Pos	Part Number	Name	Remarks	Qty	Model
(1)	964 552 056 03	dashboard trim leather	/RL 92	1	
	8YR	black	91-		
	6XL	classic grey	91-		
	9YL	cobalt blue	91-		
	6YL	magenta	91-		
	H05	marine blue	91-		
	M05	matador red	91-		
	D35	carrara grey	91-		
	J25	sherwood green	91-		
	L37	rhodamine	92		
	J17	wimbledon green	92		
	E27	florentine grey	92		
(1)	964 552 056 52	dashboard trim leather	/RL 93-	1	CARRERA/ TURBO
	8YR	black	91-		
	6XL	classic grey	91-		
	9YL	cobalt blue	91-		
	6YL	magenta	91-		
	H05	marine blue	91-		
	M05	matador red	91-		
	D35	carrara grey	91-		
	J25	sherwood green	91-		
	E38	rubicon grey	93		M 096
2	999 090 003 02	lock nut M 6		1	
3	A 964 552 231 00	cover	/L -92	1	
	01C	satin black			
3	964 552 231 01	cover	/L	1	
	01C	satin black			

Pos	Part Number	Name	Remarks	Qty	Model
(3)	A 964 552 232 00	cover	/R -92	1	
	01C	satin black			
(3)	964 552 232 01	cover	/R	1	
	01C	satin black			
4	900 025 002 02	washer A 4,3		4	
5	964 552 411 00	defroster trim		1	
	5XJ	black			
	8KM	marine blue			
	7UJ	mahogany	-90		
	9MJ	burgundy	-90		
	5XL	classic grey	91-		
	6ZH	cobalt blue	91-		
	5XW	magenta	91-		
6	999 591 713 02	speed nut B 4,2		7	
7	900 145 084 07	tapping screw B 4,2 X 19		5	
8	N 013 964 4	tapping screw B 4,2 X 16		4	
9	964 572 787 00	plastic foam strip 365 X 15 X 10		1	
10	A 911 572 051 01	centre nozzle	/LL -91	1	
	01C	black			
10	964 572 051 00	centre nozzle	/LL	1	
	01C	black			
(10)	A 911 572 052 01	centre nozzle	/RL -91	1	
	01C	black			
(10)	964 572 052 00	centre nozzle	/RL	1	
	01C	black			
11	911 552 069 00	knee protection strip leatherette	/LL/L	1	
	7AE	black	89		
	05T	black	90-		
	3MX	burgundy	-90		
	1MX	mahogany	-90		
	1KX	marine blue			
	9WH	classic grey	91-		
	7YG	cobalt blue	91-		
	9YF	magenta	91-		
11	911 552 069 01	knee protection strip leatherette	/RL/L	1	
	7AE	black	89		
	05T	black	90-		
	3MX	burgundy	-90		
	1MX	mahogany	-90		
	1KX	marine blue			
	9WH	classic grey	91-		
	7YG	cobalt blue	91-		
	9YF	magenta	91-		
11	911 552 151 50	knee protection strip leather	/LL/L-90	1	
	LG7	burgundy	-90		
	KZ2	black	-90		
	TV1	mahogany	-90		
	TS1	marine blue	-90		
	4MT	velvet red	-90		
	2WT	slate grey	-90		
	UD5	caramel	-90		
	UD6	venetian blue	-90		
(11)	911 552 151 51	knee protection strip leather	/RL/L	1	
	LG7	burgundy	-90		

Pos	Part Number	Name	Remarks	Qty	Model
	KZ2	black	-90		
	TV1	mahogany	-90		
	TS1	marine blue	-90		
	4MT	velvet red	-90		
	2WT	slate grey	-90		
	UD5	caramel	-90		
	UD6	venetian blue	-90		
	8YR	black	91-		
	6XL	classic grey	91-		
	9YL	cobalt blue	91-		
	6YL	magenta	91-		
	H05	marine blue	91-		
	M05	matador red	91-		
	D35	carrara grey	91-		
	J25	sherwood green	91-		
	L37	rhodamine	92		
	J17	wimbledon green	92		
	E27	florentine grey	92		
	E38	rubicon grey	93		M 096
12	911 552 070 00	knee protection strip leatherette	/LL/R	1	
	7AE	black	89		
	05T	black	90-		
	3MX	burgundy	-90		
	1MX	mahogany	-90		
	1KX	marine blue			
	9WH	classic grey	91-		
	7YG	cobalt blue	91-		
	9YF	magenta	91-		
12	911 552 070 01	knee protection strip leatherette	/RL/R	1	
	7AE	black	89		
	05T	black	90-		
	3MX	burgundy	-90		
	1MX	mahogany	-90		
	1KX	marine blue			
	9WH	classic grey	91-		
	7YG	cobalt blue	91-		
	9YF	magenta	91-		
12	911 552 152 50	knee protection strip leather	/LL/R-90	1	
	LG7	burgundy	-90		
	KZ2	black	-90		
	TV1	mahogany	-90		
	TS1	marine blue	-90		
	4MT	velvet red	-90		
	2WT	slate grey	-90		
	UD5	caramel	-90		
	UD6	venetian blue	-90		
(12)	911 552 152 51	knee protection strip leather	/RL/R	1	
	LG7	burgundy	-90		
	KZ2	black	-90		
	TV1	mahogany	-90		
	TS1	marine blue	-90		
	4MT	velvet red	-90		
	2WT	slate grey	-90		
	UD5	caramel	-90		
	UD6	venetian blue	-90		
	8YR	black	91-		

Pos	Part Number	Name	Remarks	Qty	Model
	6XL	classic grey	91-		
	9YL	cobalt blue	91-		
	6YL	magenta	91-		
	H05	marine blue	91-		
	M05	matador red	91-		
	D35	carrara grey	91-		
	J25	sherwood green	91-		
	L37	rhodamine	92		
	J17	wimbledon green	92		
	E27	florentine grey	92		
	E38	rubicon grey	93		M 096
13	999 073 062 02	tapping screw B 4,8 X 19		2	
14	N 011 666 7	washer B 6,4		3	
15	900 143 007 02	tapping screw B 4,2 X 13		2	
16	N 011 665 3	washer B 5,3		4	
17	N 011 005 14	hexagon nut M 5		4	
18	999 591 850 02	speed nut B 4,2		2	
20	911 552 101 00	ashtray		1	
22	911 552 050 01	ashtray handle leatherette		1	
	7AE	black	89		
	05T	black	90-		
	1MX	mahogany	-90		
	3MX	burgundy	-90		
	1KX	marine blue			
	9WH	classic grey	91-		
	7YG	cobalt blue	91-		

Pos	Part Number	Name	Remarks	Qty	Model
	9YF	magenta	91-		
22	911 552 049 50	ashtray handle leather		1	
	LG7	burgundy	-90		
	KZ2	black	-90		
	TV1	mahogany	-90		
	TS1	marine blue	-90		
	4MT	velvet red	-90		
	2WT	slate grey	-90		
	UD5	caramel	-90		
	UD6	venetian blue	-90		
	8YR	black	91-		
	6XL	classic grey	91-		
	9YL	cobalt blue	91-		
	6YL	magenta	91-		
	H05	marine blue	91-		
	M05	matador red	91-		
	D35	carrara grey	91-		
	J25	sherwood green	91-		
	L37	rhodamine	92		
	J17	wimbledon green	92		
	E27	florentine grey	92		
	E38	rubicon grey	93		M 096
23	911 552 607 00	fireproof plate		1	
	70B	black			
(23)	911 552 607 50	fireproof plate		1	M 981
	70B	black			
26	900 075 408 07	hexagon-head bolt M 4 X 16		2	
29	999 703 344 40	cap		2	CARRERA RS

Pos	Part Number	Name	Remarks	Qty	Model
	01C	satin black			
30	964 552 477 00	cover	/LL/L89	1	
	7AE	black			
(30)	964 552 478 00	cover	/RL/R89	1	
	7AE	black			
30	964 552 477 00	cover	/LL/L90-	1	
	05T	black			
(30)	964 552 478 00	cover	/RL/R90-	1	
	05T	black			
30	993 552 387 00	cover leather	/LL/L93-	1	M 096
	E38	rubicon grey			
	8YR	black			
(30)	993 552 388 00	cover leather	/RL/R93-	1	M 096
	E38	rubicon grey			
	8YR	black			
31	964 552 479 00	cover	/LL 89	1	
	7AE	black			
(31)	964 552 480 00	cover	/RL 89	1	
	7AE	black			
31	964 552 479 00	cover	/LL 90-	1	
	05T	black			
(31)	964 552 480 00	cover	/RL 90-	1	
	05T	black			
31	993 552 373 00	cover leather	/LL 93-	1	M 096
	E38	rubicon grey			
	8YR	black			
(31)	993 552 374 00	cover leather	/RL 93-	1	M 096
	E38	rubicon grey			
	8YR	black			
32	911 552 488 04	cover	89	1	
	7AE	black			
32	911 552 488 04	cover	90-	1	
	05T	black			
33	964 552 594 00	cover	/LL/R89	1	
	7AE	black			
(33)	964 552 593 00	cover	/RL/L89	1	
	7AE	black			
33	964 552 594 00	cover	/LL/R90-	1	
	05T	black			
(33)	964 552 593 00	cover	/RL/L90-	1	
	05T	black			
33	993 552 494 00	cover leather	/LL/R93-	1	M 096
	E38	rubicon grey			
	8YR	black			
(33)	993 552 493 00	cover leather	/RL/L93-	1	M 096
	E38	rubicon grey			
	8YR	black			
34	A 911 552 113 00	cover	/L -91	1	
	01C	black			
34	911 552 591 00	cover	/L	1	
	01C	black			
35	A 911 552 114 00	cover	/R -91	1	
	01C	black			
35	911 552 592 00	cover	/R	1	
	01C	black			

Pos	Part Number	Name	Remarks	Qty	Model
36	900 145 003 07	tapping screw BZ 3,5 X 9,5		2	
37	A 911 572 041 00	side vent	/LL/L-91	1	
	01C	black			
37	964 572 261 00	side vent	/LL/L	1	
	01C	black			
(37)	A 911 572 075 00	side vent	/RL/L-91	1	
	01C	black			
(37)	964 572 261 01	side vent	/RL/L	1	
	01C	black			
38	A 911 572 042 00	side vent	/LL/R-91	1	
	01C	black			
(38)	964 572 262 00	side vent	/LL/R	1	
	01C	black			
(38)	A 911 572 076 00	side vent	/RL/R-91	1	
	01C	black			
(38)	964 572 262 01	side vent	/RL/R	1	
	01C	black			
39	911 552 217 00	rose		1	
	70B	black lid-release cable			
40	911 552 463 02	trim		1	
	70B	black			
42	911 552 549 00	cover	/LL	1	CARRERA/ TURBO
	700	black			
(42)	911 552 550 00	cover	/RL	1	CARRERA/ TURBO
	700	black			
42	964 552 549 00	cover leather	/LL	1	SPEEDSTER
	8YR	black			
	L29	guards red			
	2XR	pearl grey			
	G55	maritime blue			
	U28	speed yellow			
(42)	964 552 550 00	cover leather	/RL	1	SPEEDSTER
	8YR	black			
	L29	guards red			
	2XR	pearl grey			
	G55	maritime blue			
	U28	speed yellow			

- -- E N D -- -

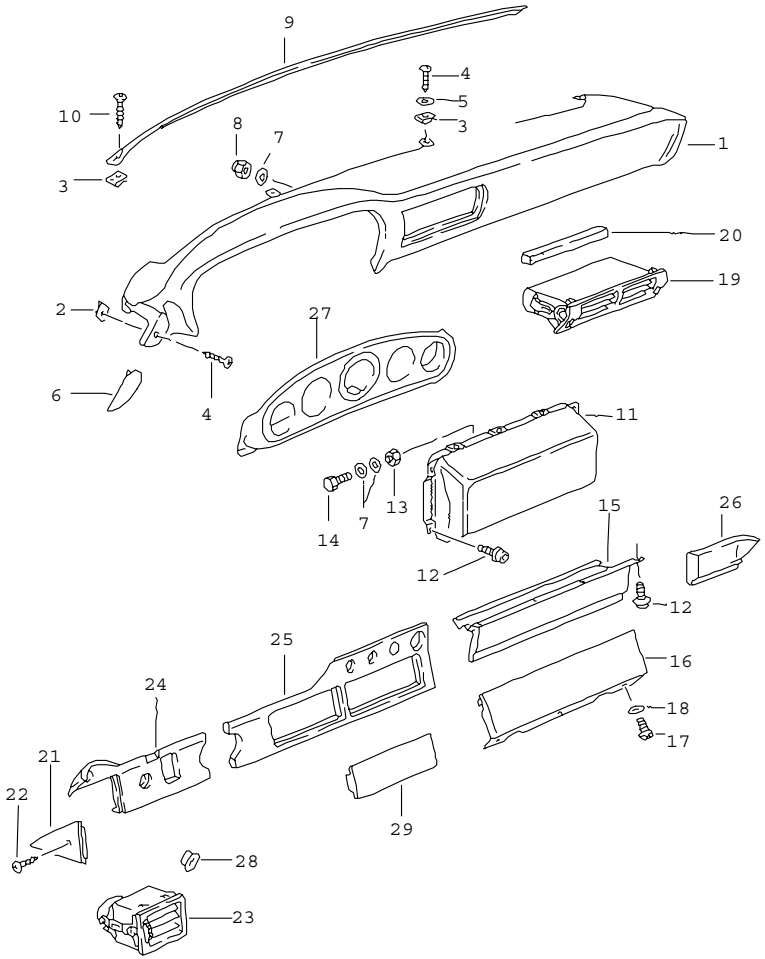

Pos	Part Number	Name	Remarks	Qty	Model
		dashboard trim airbag	/LL 91-		
1	964 552 055 00	dashboard trim leatherette	-91	1	
	05T	black			
	1KX	marine blue			
	9WH	classic grey	91-		
	7YG	cobalt blue	91-		
	9YF	magenta	91-		
1	964 552 055 02	dashboard trim leatherette	92	1	
	05T	black			
	1KX	marine blue			
	9WH	classic grey	91-		
	7YG	cobalt blue	91-		
	9YF	magenta	91-		
1	964 552 055 04	dashboard trim leatherette	93-	1	CARRERA/ TURBO
	05T	black			
	1KX	marine blue			
	9WH	classic grey	91-		
	7YG	cobalt blue	91-		
	9YF	magenta	91-		
(1)	964 552 055 06	dashboard trim leatherette		1	SPEEDSTER
	05T	black			
1	A 964 552 055 01	dashboard trim leather	-91	1	
	8YR	black	91-		
	6XL	classic grey	91-		
	9YL	cobalt blue	91-		
	6YL	magenta	91-		

Pos	Part Number	Name	Remarks	Qty	Model
	H05	marine blue	91-		
	M05	matador red	91-		
	D35	carrara grey	91-		
	J25	sherwood green	91-		
1	964 552 055 03	dashboard trim leather	92	1	
	8YR	black	91-		
	6XL	classic grey	91-		
	9YL	cobalt blue	91-		
	6YL	magenta	91-		
	H05	marine blue	91-		
	M05	matador red	91-		
	D35	carrara grey	91-		
	J25	sherwood green	91-		
	L37	rhodamine	92		
	J17	wimbledon green	92		
	E27	florentine grey	92		
1	964 552 055 51	dashboard trim leather	93-	1	
	8YR	black	91-		
	6XL	classic grey	91-		
	9YL	cobalt blue	91-		
	6YL	magenta	91-		
	H05	marine blue	91-		
	M05	matador red	91-		
	D35	carrara grey	91-		
	J25	sherwood green	91-		
	E38	rubicon grey	93		M 096
2	999 591 331 02	speed nut B 4,2		2	
3	999 591 713 02	speed nut B 4,2		7	
4	N 013 964 4	tapping screw B 4,2 X 16		4	
5	900 025 002 02	washer A 4,3		4	
6	A 964 552 231 00	cover	/L -92	1	
	01C	satin black			
6	964 552 231 01	cover		1	
	01C	satin black			
(6)	A 964 552 232 00	cover	/R -92	1	
	01C	satin black			
(6)	964 552 232 01	cover		1	
	01C	satin black			
7	N 011 666 7	washer B 6,4		3	
8	999 090 003 02	lock nut M 6		1	
9	964 552 411 00	defroster vent		1	
	5XJ	black			
	8KM	marine blue			
	5XL	classic grey	91-		
	6ZH	cobalt blue	91-		
	5XW	magenta	91-		
10	900 145 084 07	tapping screw B 4,2 X 19		5	
11	-	airbag unit passenger's side see group 4/03/06		1	
12	999 218 062 07	screw micro-self-locking M 5 X 10		8	
13	900 076 010 07	hexagon nut M 6		1	

Pos	Part Number	Name	Remarks	Qty	Model
14	900 075 057 02	hexagon-head bolt M 6 X 16		1	
15	964 552 088 00	cover upper part		1	
	05T	black			
15	993 552 078 00	cover upper part leather	93-	1	M 096
	E38	rubicon grey			
	8YR	black			
16	964 552 090 00	cover lower part		1	
	05T	black			
16	993 552 080 00	cover lower part leather	93-	1	M 096
	E38	rubicon grey			
	8YR	black			
17	900 146 003 02	oval-head screw M 5 X 10		3	
18	900 151 027 02	washer B 5,3		3	
19	A 911 572 051 01	centre nozzle	-91	1	
	01C	black			
19	964 572 051 00	centre nozzle		1	
	01C	black			
20	964 572 787 00	plastic foam strip 365 X 15 X 10		1	
21	A 911 552 113 00	cover	/L -91	1	
	01C	black			
21	911 552 591 00	cover	/L	1	
	01C	black			
(21)	A 911 552 114 00	cover	/R -91	1	
	01C	black			
(21)	911 552 592 00	cover	/R	1	
	01C	black			
22	900 145 003 07	tapping screw BZ 3,5 X 9,5		2	
23	A 911 572 041 00	side vent	/L -91	1	
	01C	black			
23	964 572 261 00	side vent	/L	1	
	01C	black			
(23)	A 911 572 042 00	side vent	/R -91	1	
	01C	black			
(23)	964 572 262 00	side vent	/R	1	
	01C	black			
24	964 552 477 00	cover	/LL	1	
	05T	black			
24	993 552 387 00	cover leather	/LL 93-	1	M 096
	E38	rubicon grey			
	8YR	black			
25	964 552 479 00	cover	/LL	1	
	05T	black			
25	993 552 373 00	cover leather	/LL 93-	1	M 096
	E38	rubicon grey			
	8YR	black			
26	964 552 594 00	cover	/LL/R	1	
	05T	black			
26	993 552 494 00	cover leather	/LL/R93-	1	M 096
	E38	rubicon grey			
	8YR	black			
27	911 552 549 00	cover covering for instruments		1	

Pos	Part Number	Name	Remarks	Qty	Model
	700	black			
27	964 552 549 00	cover leather		1	SPEEDSTER
	8YR	black			
	L29	guards red			
	2XR	pearl grey			
	G55	maritime blue			
	U28	speed yellow			
28	911 552 217 00	rose		1	
	70B	black			
29	911 552 463 02	trim		1	
	70B	black			
		- -- E N D -- -			

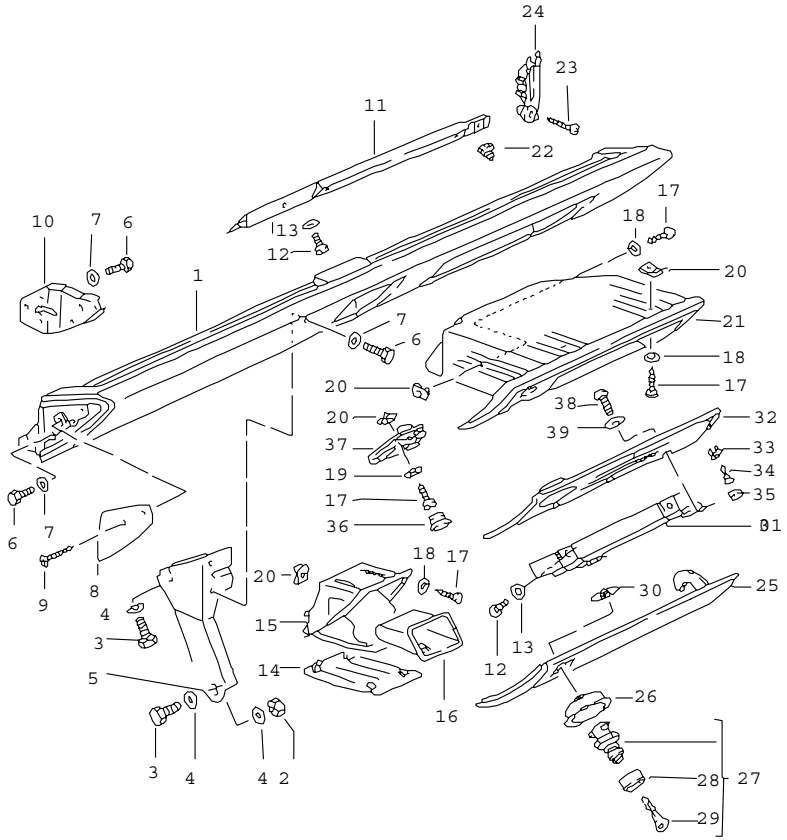

Pos	Part Number	Name	Remarks	Qty	Model
		knee protection strip airbag for cars with glove box cover locking device left	/LL 91-		
1	964 552 073 00	knee protection strip	-91	1	
	05T	black			
	1KX	marine blue			
	9WH	classic grey	91-		
	7YG	cobalt blue	91-		
	9YF	magenta order also:	91-		
1	964 552 073 04	knee protection strip leatherette	92-	1	
	05T	black			
	1KX	marine blue			
	9WH	classic grey	91-		
	7YG	cobalt blue	91-		
	9YF	magenta order also:	91-		
-	964 538 961 01	lock cylinder		1	
1	964 552 073 05	knee protection strip leather		1	
	8YR	black	91-		
	6XL	classic grey	91-		
	9YL	cobalt blue	91-		
	6YL	magenta	91-		
	8ZL	light grey	91-		
	4YU	cashmere beige	91-		
	M05	matador red	91-		
	D35	carrara grey	91-		
	J25	sherwood green	91-		
	H05	marine blue	91-		

Pos	Part Number	Name	Remarks	Qty	Model
	L37	rhodamine	92		
	J17	wimbledon green	92		
	E27	florentine grey order also:	92		
-	964 538 961 01	lock cylinder		1	
2	900 076 025 02	hexagon nut M 8		1	
3	900 075 087 02	hexagon-head bolt M 8 X 16		2	
4	900 151 008 02	washer B 8,4		2	
5	964 552 069 01	support tunnel		1	
6	900 075 057 02	hexagon-head bolt M 6 X 16		12	
7	900 151 003 02	washer A 6,4		12	
8	964 552 465 00	cover	/L	1	
	01C	black			
(8)	964 552 466 00	cover	/R	1	
	01C	black			
9	900 145 072 07	tapping screw B 3,5 X 22		4	
10	993 552 377 00	support	/L	1	
(10)	993 552 378 00	support hinge pillar	/R	1	
11	993 552 195 00	reinforcement upper		1	
12	900 146 003 02	oval-head screw M 5 X 10		3	
13	900 151 027 02	washer B 5,3		3	
14	964 552 571 00	cover leatherette		1	
	05T	black			
	1KX	marine blue			
	9WH	classic grey	91-		
	7YG	cobalt blue	91-		
	9YF	magenta	91-		
14	964 552 571 01	cover leather		1	
	8YR	black	91-		
	6XL	classic grey	91-		
	9YL	cobalt blue	91-		
	6YL	magenta	91-		
	8ZL	light grey	91-		
	4YU	cashmere beige	91-		
	M05	matador red	91-		
	D35	carrara grey	91-		
	J25	sherwood green	91-		
	H05	marine blue	91-		
	L37	rhodamine	92		
	J17	wimbledon green	92		
	E27	florentine grey	92		
15	964 552 923 00	housing		1	
16	964 552 925 00	insert		1	
17	900 143 085 07	tapping screw B 4,2 X 16		3	
18	900 151 028 07	washer B 4,3		4	
19	900 025 049 07	washer A 4,3		3	
20	999 591 713 02	speed nut B 4,2		7	
21	A 964 552 501 01	glove compartment	-91	1	
	71B	black			
21	964 552 501 02	glove compartment order also:	-91	1	

Pos	Part Number	Name	Remarks	Qty	Model
-	964 613 602 00	switch		1	
22	N 020 001 1	plug A 8,0 X 2,0	-91	1	
23	999 919 088 02	oval-head screw 5,0 X 16	92-	1	
24	964 552 723 00	stop		1	
25	964 552 125 00	glove box cover leatherette	-91	1	
	05T	black			
	1KX	marine blue			
	9WH	classic grey	91-		
	7YG	cobalt blue	91-		
	9YF	magenta	91-		
25	964 552 125 02	glove box cover leatherette	92-	1	
	05T	black			
	1KX	marine blue			
	9WH	classic grey	91-		
	7YG	cobalt blue	91-		
	9YF	magenta	91-		
25	964 552 129 00	glove box cover leather		1	
	8YR	black	91-		
	6XL	classic grey	91-		
	9YL	cobalt blue	91-		
	6YL	magenta	91-		
	8ZL	light grey	91-		
	4YU	cashmere beige	91-		
	M05	matador red	91-		
	D35	carrara grey	91-		
	J25	sherwood green	91-		
	H05	marine blue	91-		
	L37	rhodamine	92		
	J17	wimbledon green	92		
	E27	florentine grey	92		
26	964 552 312 00	rose		1	
	1DB	black lid lock			
27	964 538 959 00	glove compartment lock w/o stipulated lock number		1	
27	964 538 959 01	glove compartment lock state lock number		1	
28	964 538 561 00	rotary knob		1	
	01C	black			
29	911 538 902 00	replacement key state lock number		X	
30	999 025 200 07	washer 21,3 X 40 X 1		1	
31	964 552 095 00	hinge		1	
	70B	black			
32	964 552 315 00	interior frame	-91	1	
	71B	satin black glove box cover			
32	964 552 315 01	interior frame	92-	1	
	71B	satin black glove box cover			
33	999 591 679 40	special nut B 4,2		1	
34	N 902 662 01	tapping screw B 3,5 X 16		1	
35	944 552 259 00	plug		1	
36	914 552 233 10	filler piece		3	
	01C	black			
37	964 552 261 00	end plate		1	
(38)	900 269 069 07	countersunk-head screw M 5 X 12	-91	2	

Pos	Part Number	Name	Remarks	Qty	Model	Pos	Part Number	Name	Remarks	Qty	Model
38	900 146 132 07	oval-head screw M 5 X 8	92-	2							
39	999 025 234 07	washer 5,3 X 22 X 1,6	92-	2							
		- -- E N D -- -									

Model	Year	MG	SG	Illustration	Restrictions	Update	18:08	24.11.2005	PORSCHE PET PORSCHE
964	94	8	09	809-03		194			

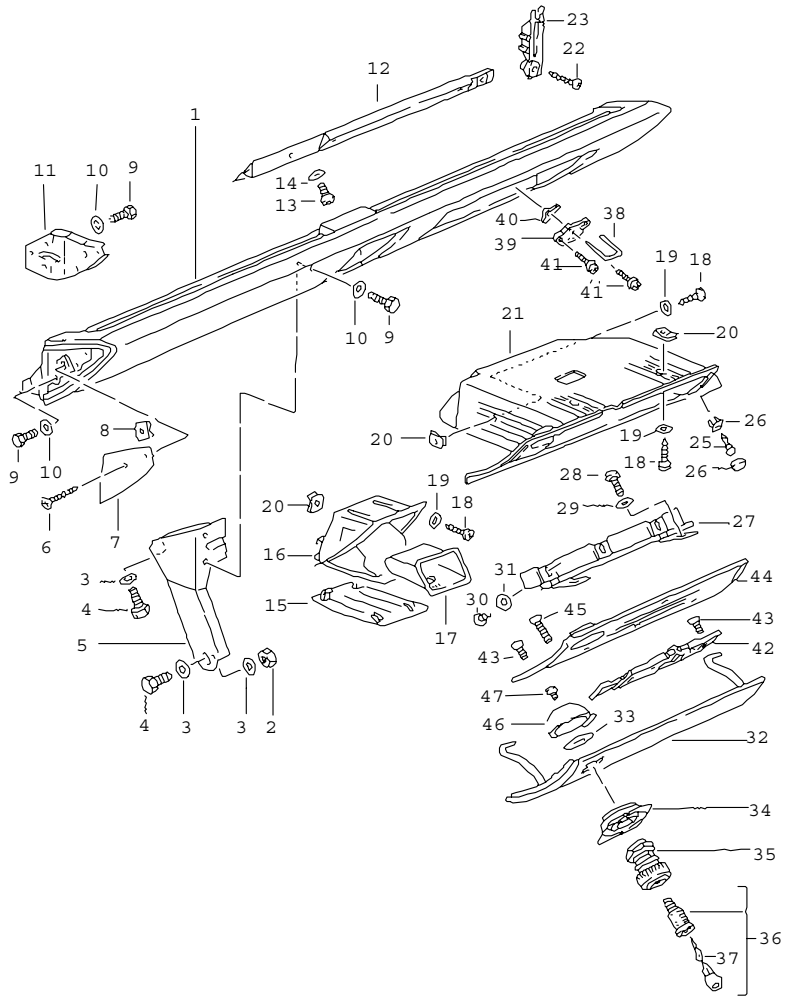

Pos	Part Number	Name	Remarks	Qty	Model
		knee protection strip airbag for cars with glove box cover locking device centre	/LL		
(1)	964 552 053 00	knee protection strip complete metal leatherette		1	
	05T	black			
	1KX	marine blue			
	9WH	classic grey			
	7YG	cobalt blue			
	9YF	magenta			
1	964 552 073 06	knee protection strip metal leatherette		1	
	05T	black			
	1KX	marine blue			
	9WH	classic grey			
	7YG	cobalt blue			
	9YF	magenta			
(1)	A 964 552 053 01	knee protection strip metal leather		1	
	8YR	black			
	6XL	classic grey			
	9YL	cobalt blue			
	6YL	magenta			
	8ZL	light grey			
	4YU	cashmere beige			
	M05	matador red			
	D35	carrara grey			
	J25	sherwood green			

Pos	Part Number	Name	Remarks	Qty	Model
	H05	marine blue			
	L37	rhodamine	92		
	J17	wimbledon green	92		
	E27	florentine grey	92		
	E38	rubicon grey	93		M 096
1	964 552 073 07	knee protection strip metal leather		1	
	8YR	black			
	6XL	classic grey			
	9YL	cobalt blue			
	6YL	magenta			
	8ZL	light grey			
	4YU	cashmere beige			
	M05	matador red			
	D35	carrara grey			
	J25	sherwood green			
	H05	marine blue			
	L37	rhodamine	92		
	J17	wimbledon green	92		
	E27	florentine grey	92		
	E38	rubicon grey	93		M 096
2	900 076 025 02	hexagon nut M 8		1	
3	900 151 008 02	washer B 8,4		2	
4	900 075 087 02	hexagon-head bolt M 8 X 16		2	
5	964 552 069 01	support tunnel		1	
6	900 145 072 07	tapping screw B 3,5 X 22		4	
7	964 552 465 00	cover	/L	1	

Pos	Part Number	Name	Remarks	Qty	Model
	01C	black			
(7)	964 552 466 00	cover	/R	1	
	01C	black			
8	999 591 725 02	speed nut B 3,5		2	
9	900 075 057 02	hexagon-head bolt M 6 X 16		12	
10	900 151 003 02	washer A 6,4		12	
11	993 552 377 00	support	/L	1	
(11)	993 552 378 00	support hinge pillar	/R	1	
12	993 552 195 00	reinforcement upper		1	
13	900 146 003 02	oval-head screw M 5 X 10		3	
14	900 151 027 02	washer B 5,3		3	
15	964 552 571 00	cover leatherette		1	
	05T	black			
	1KX	marine blue			
	9WH	classic grey			
	7YG	cobalt blue			
	9YF	magenta			
15	964 552 571 01	cover leather		1	
	8YR	black			
	6XL	classic grey			
	9YL	cobalt blue			
	6YL	magenta			
	8ZL	light grey			
	4YU	cashmere beige			
	M05	matador red			

Pos	Part Number	Name	Remarks	Qty	Model
	D35	carrara grey			
	J25	sherwood green			
	H05	marine blue			
	L37	rhodamine	92		
	J17	wimbledon green	92		
	E27	florentine grey	92		
	E38	rubicon grey	93		M 096
16	964 552 923 00	housing		1	
17	964 552 925 00	insert		1	
18	900 143 085 07	tapping screw B 4,2 X 16		3	
19	900 151 028 07	washer B 4,3		4	
20	999 591 713 02	speed nut B 4,2		7	
21	964 552 501 03	glove compartment		1	
22	999 919 088 02	oval-head screw 5,0 X 16		2	
23	964 552 723 00	stop		2	
24	999 591 679 40	special nut B 4,2		2	
25	N 902 662 01	tapping screw B 3,5 X 16		2	
26	944 552 259 00	plug		2	
27	964 552 095 00	hinge		1	
	70B	black			
28	900 146 132 07	oval-head screw M 5 X 8		2	
29	999 025 234 07	washer 5,3 X 22 X 1,6		2	
30	900 146 003 02	oval-head screw M 5 X 10		2	
31	900 151 027 02	washer B 5,3		2	

Pos	Part Number	Name	Remarks	Qty	Model
(32)	964 552 123 04	glove box cover leatherette		1	
	05T	black			
	1KX	marine blue			
	9WH	classic grey			
	7YG	cobalt blue			
	9YF	magenta			
(32)	A 964 552 123 05	glove box cover		1	
	8YR	black			
	6XL	classic grey			
	9YL	cobalt blue			
	6YL	magenta			
	8ZL	light grey			
	4YU	cashmere beige			
	M05	matador red			
	D35	carrara grey			
	J25	sherwood green			
	H05	marine blue			
	L37	rhodamine	92		
	J17	wimbledon green	92		
	E27	florentine grey	92		
	E38	rubicon grey	93		M 096
32	993 552 129 00	glove box cover leather		1	
	8YR	black			
	6XL	classic grey			
	9YL	cobalt blue			
	6YL	magenta			
	8ZL	light grey			
	4YU	cashmere beige			

Pos	Part Number	Name	Remarks	Qty	Model
	M05	matador red			
	D35	carrara grey			
	J25	sherwood green			
	H05	marine blue			
	L37	rhodamine	92		
	J17	wimbledon green	92		
	E27	florentine grey	92		
	E38	rubicon grey	93		M 096
33	999 025 200 07	washer 21,3 X 40 X 1		1	
34	964 552 312 00	rose		1	
	1DB	black			
35	964 538 061 00	glove compartment lock		1	
	01C	satin black			
36	964 538 961 00	lock cylinder w/o stipulated lock number order also: POS.35		1	
36	964 538 961 01	lock cylinder state lock number order also: POS.35		1	
37	911 538 902 00	replacement key state lock number		X	
38	A 964 552 633 00	clip		1	
39	A 964 552 635 00	plate		1	
40	A 964 552 637 00	clamping piece in your order POS.38 - 40		1	
38	964 552 633 01	clip		1	
39	964 552 635 01	plate		1	
40	964 552 637 01	clamping piece		1	
41	900 146 117 02	screw M 5 X 12		2	
42	964 552 061 00	plate	/LL	1	
(42)	993 552 062 00	plate locking device glove box cover	/RL	1	
43	900 269 013 07	countersunk-head screw M 5 X 8		5	
44	964 552 315 02	interior frame	/LL	1	
(44)	993 552 316 00	interior frame	/RL	1	
45	900 269 018 07	countersunk-head screw M 5 X 16		2	
46	964 552 623 00	control button		1	
	01C	satin black			
47	900 270 046 07	countersunk-head screw M 4 X 8		1	
		- -- E N D -- -			

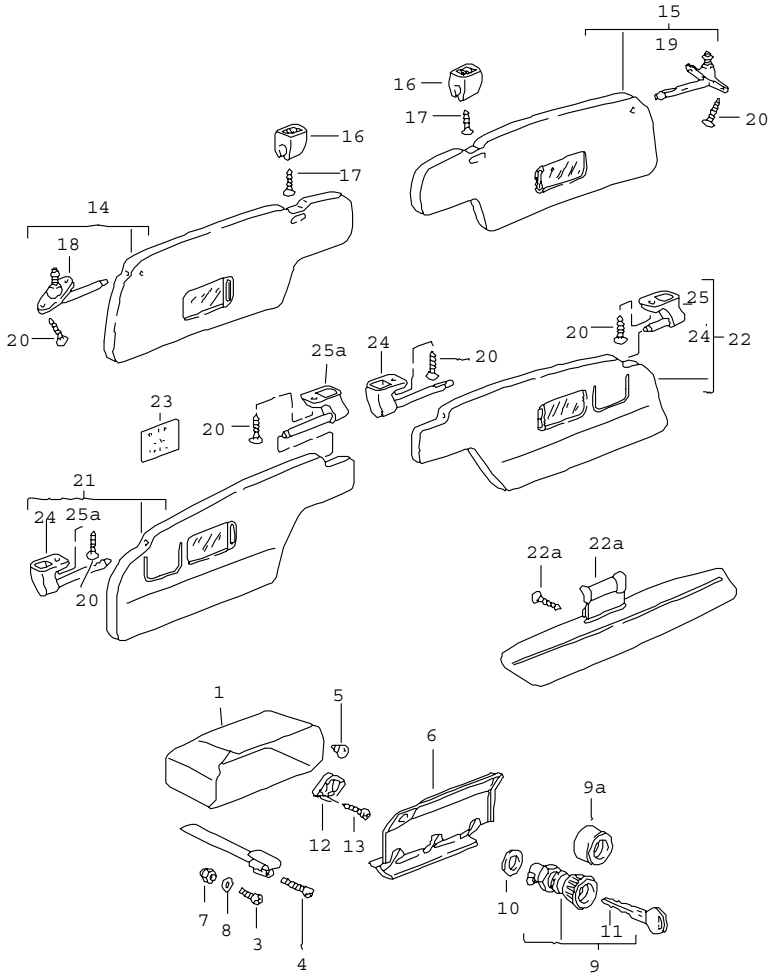

Pos	Part Number	Name	Remarks	Qty	Model
		glove compartment for cars without airbag sun visors			
1	964 552 501 00	glove compartment		1	
3	900 146 003 02	oval-head screw M 5 X 10		2	
4	N 014 153 1	oval-head screw M 5 X 40		1	
5	999 703 230 40	buffer $=14		2	
6	911 552 010 05	glove box cover		1	
7	N 021 196 1	lock nut M 5		4	
8	900 025 003 02	washer 5,3		4	
9	911 552 902 07	glove compartment lock w/o stipulated lock number order also: POS.9A		1	
9	911 552 902 08	glove compartment lock state lock number order also: POS.9A		1	
9A	911 538 561 00	knob		1	
10	911 552 103 01	washer		1	
11	911 538 902 00	replacement key state lock number		2	
12	911 552 513 02	door lock striker		1	
13	900 143 002 07	tapping screw 2,9 X 9,5		2	
14	964 731 031 01	sun visor	/L	1	COUPE
	CA9	black			
	TV3	mahogany	-90		
	TS3	marine blue			
	RS8	burgundy	-90		
	6WJ	classic grey	91-		

Pos	Part Number	Name	Remarks	Qty	Model
	7YU	cobalt blue	91-		
	8YA	magenta	91-		
	2UE	rubicon grey	93-		M 096
15	964 731 032 01	sun visor with mirror	/R	1	COUPE
	CA9	black			
	TV3	mahogany	-90		
	TS3	marine blue			
	RS8	burgundy	-90		
	6WJ	classic grey	91-		
	7YU	cobalt blue	91-		
	8YA	magenta	91-		
	2UE	rubicon grey	93-		M 096
16	911 731 331 00	support		2	COUPE
17	900 143 111 07	oval-head sheetmetal screw B 3,9 X 13		2	COUPE
18	964 731 319 00	bearing	/L	1	COUPE
19	964 731 320 00	bearing	/R	1	COUPE
20	900 145 075 07	tapping screw B 4,2 X 16		4	
21	A 964 731 031 40	sun visor with mirror	/L	1	TARGA/CABRIO
	CA9	black			
21	964 731 031 42	sun visor with mirror	/L	1	TARGA/CABRIO
	CA9	black			
21	A 964 731 031 43	sun visor with mirror	/L	1	TARGA/CABRIO
	CA9	black			
22	964 731 032 40	sun visor with mirror	/R	1	TARGA/CABRIO
	CA9	black			
22	A 964 731 032 41	sun visor with mirror	/R	1	TARGA/CABRIO
	CA9	black			
(22A)	964 731 031 02	sun visor	/L	1	SPEEDSTER
	CA9	black			
22A	964 731 032 02	sun visor	/R	1	SPEEDSTER
	CA9	black			
22B	900 270 009 02	countersunk-head screw M 4 X 8		2	SPEEDSTER
23	964 701 401 00	sticker german		1	CABRIO
23	964 701 401 03	sticker english		1	CABRIO
24	964 731 319 40	bearing bracket	/L	2	TARGA/CABRIO
25	964 731 320 40	bearing	/R -93	2	TARGA/CABRIO
25A	964 731 320 40	bearing bracket	94-	2	TARGA/CABRIO

- -- E N D -- -

Model	Year	MG	SG	Illustration	Restrictions	Update	18:08	24.11.2005	PORSCHE PET PORSCHE
964	94	8	09	809-10		194			

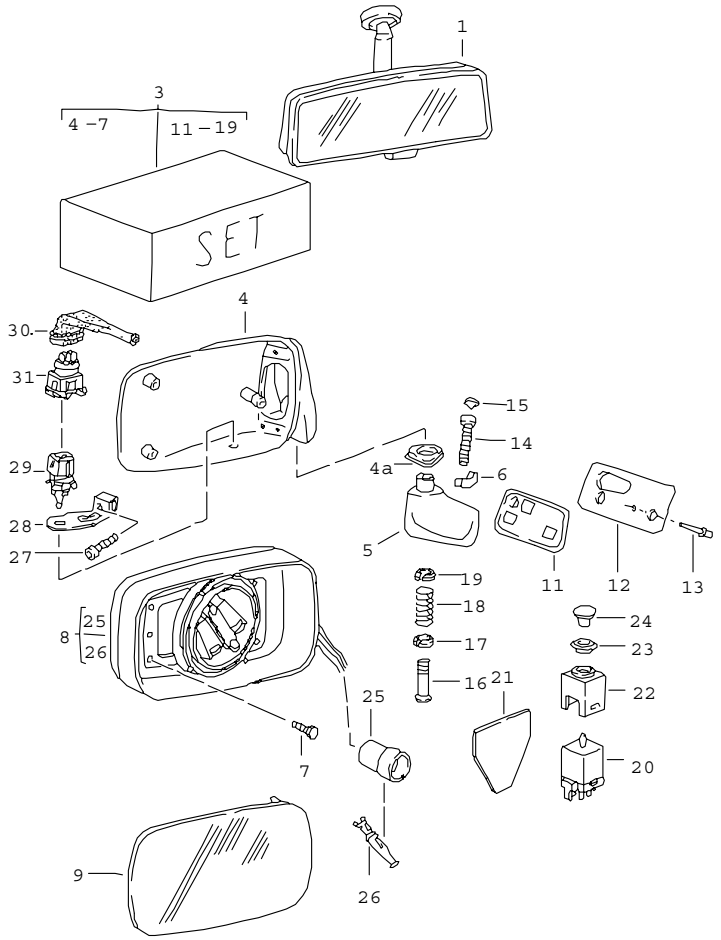

Pos	Part Number	Name	Remarks	Qty	Model
		interior mirror door mirror	-91 -91		CARRERA 2/4
1	477 857 511 A	interior mirror		1	
	01C	black			
3	911 731 927 01	repair kit driver's door	/LL/L	1	
(3)	911 731 928 01	repair kit passenger's door	/LL/R	1	
3	911 731 931 01	repair kit passenger's door	/RL/L	1	
(3)	911 731 932 01	repair kit driver's door	/RL/R	1	
4	911 731 043 03	mirror housing	/L	1	
(4)	911 731 044 03	mirror housing	/R	1	
4A	944 731 143 00	seal		2	
5	911 731 241 02	mirror base	/LL/L	1	
(5)	911 731 287 02	mirror base	/RL/L	1	
(5)	911 731 288 02	mirror base	/LL/R	1	
(5)	911 731 242 02	mirror base	/RL/R	1	
6	911 731 263 00	mounting piece		2	
7	999 143 003 02	hexagon-head bolt M 5 X 10		3	
8	944 731 027 01	electric installation set		2	
9	944 731 035 02	mirror glass		1	
9	944 731 035 04	mirror glass plan		1	(S)
(9)	944 731 035 03	mirror glass convex		1	
9	944 731 035 05	mirror glass convex		1	(S)
11	911 731 247 00	desk pad	/L	1	
(11)	911 731 248 00	desk pad	/R	1	
12	911 531 197 00	reinforcement	/L	1	
(12)	911 531 198 00	reinforcement	/R	1	

Pos	Part Number	Name	Remarks	Qty	Model
13	A 999 190 123 02	blind rivet 3,2 X 7,37		4	
13	999 190 123 02	blind rivet 3,2 X 6,1		4	
14	999 218 021 02	pan-head screw micro-self-locking AM 5 X 35		2	
15	999 703 137 40	cap		2	
16	911 731 257 02	guide tube		1	
17	911 731 345 02	adjusting washer		1	
18	911 731 029 01	compression spring		1	
19	911 731 347 00	adjusting washer		1	
20	-	see group 9/03/06		1	
21	911 731 343 03	gasket		1	
2-24	-	see group 9/03/06		1	
25	803 971 980	connector 7-pole		1	
26	N 017 564 1	round connector 1,6 - 1		X	
27	928 641 342 00	support	/LL 90-	1	M 659
(27)	927 641 342 00	support	/RL 90-	1	M 659
28	N 014 760 3	pan-head screw M 5 X 12	90-	1	M 659
29	928 641 142 00	temperature sensor	90-	1	M 659
30	911 612 817 00	protection cap	90-	1	M 659
31	443 906 232	connector housing	90-	1	M 659
		- -- E N D -- -			

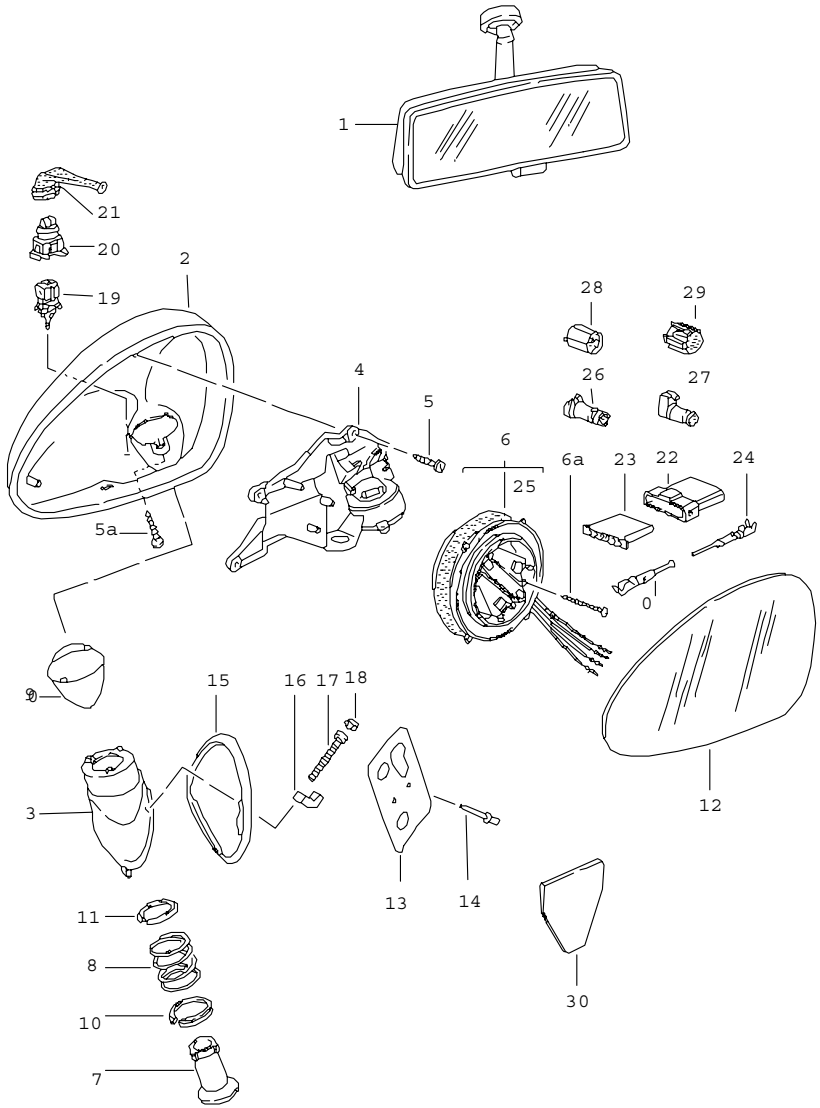

Pos	Part Number	Name	Remarks	Qty	Model
		interior mirror door mirror	92- 92-		TURBO/ TURBO-LOOK CARRERA 2/4 CARRERA RS: M 002
1	477 857 511 A	interior mirror		1	
	01C	black adhesive see group 8/05/00			
2	965 731 243 00	mirror housing	/L	1	
	G2L	prime coated			
(2)	965 731 244 00	mirror housing	/R	1	
	G2L	prime coated			
3	965 731 241 00	mirror base	/LL/L	1	
	G2M	prime coated			
(3)	965 731 242 01	mirror base	/LL/R	1	
	G2M	prime coated			
(3)	965 731 241 01	mirror base	/RL/L	1	
	G2M	prime coated			
(3)	965 731 242 00	mirror base	/RL/R	1	
	G2M	prime coated			
4	965 731 245 01	reinforcement plate	/L	1	
(4)	965 731 246 01	reinforcement plate	/R	1	
5	999 919 109 02	countersunk-head screw 3,0 X 12	92-	6	
5A	999 919 110 02	oval-head screw 3 X 14	92-	2	
(6)	965 624 901 00	adjusting motor	92-	1	
6A	900 278 013 02	oval-head screw M 3 X 30		6	
7	965 731 257 00	bolt		2	
8	965 731 259 00	compression spring		2	
9	965 731 143 00	gasket	/L	1	

Pos	Part Number	Name	Remarks	Qty	Model
(9)	965 731 144 00	gasket	/R	1	
10	965 731 345 00	adjusting washer lower		2	
11	965 731 347 00	adjusting washer upper		2	
12	965 731 035 00	mirror glass plan	/L	1	
(12)	965 731 036 00	mirror glass plan	/R	1	
(12)	965 731 037 00	mirror glass convex	/L	1	
(12)	965 731 038 00	mirror glass convex	/R	1	
13	911 531 197 00	reinforcement	/L	1	
(13)	911 531 198 00	reinforcement	/R	1	
14	999 190 123 02	blind rivet 3,2 X 6,1		4	
15	965 731 247 00	desk pad	/LL/L	1	
(15)	965 731 248 01	desk pad	/LL/R	1	
(15)	965 731 247 01	desk pad	/RL/L	1	
(15)	965 731 248 00	desk pad mirror base	/RL/R	1	
16	911 731 263 00	mounting piece		2	
17	999 218 021 02	pan-head screw micro-self-locking M 5 X 35		2	
18	999 703 137 40	cap		2	
19	928 641 142 00	temperature sensor		1	
(20)	964 612 909 00	wiring harness	92-	1	
21	911 612 817 00	protection cap		1	
(24)	999 652 711 10	bush	92-	X	
(25)	999 652 710 10	pin	92-	X	
26	964 612 516 00	connector 6-pole	92-	1	
27	964 612 616 00	plug socket 6-pole	92-	1	
28	928 612 615 00	connector 15-pole	92-	1	
29	928 612 515 02	plug socket 15-pole	92-	1	
30	911 731 343 03	gasket		1	
		- -- E N D -- -			

Model	Year	MG	SG	Illustration	Restrictions	Update	18:09	24.11.2005	PORSCHE PET PORSCHE
964	94	8	09	809-13		194			

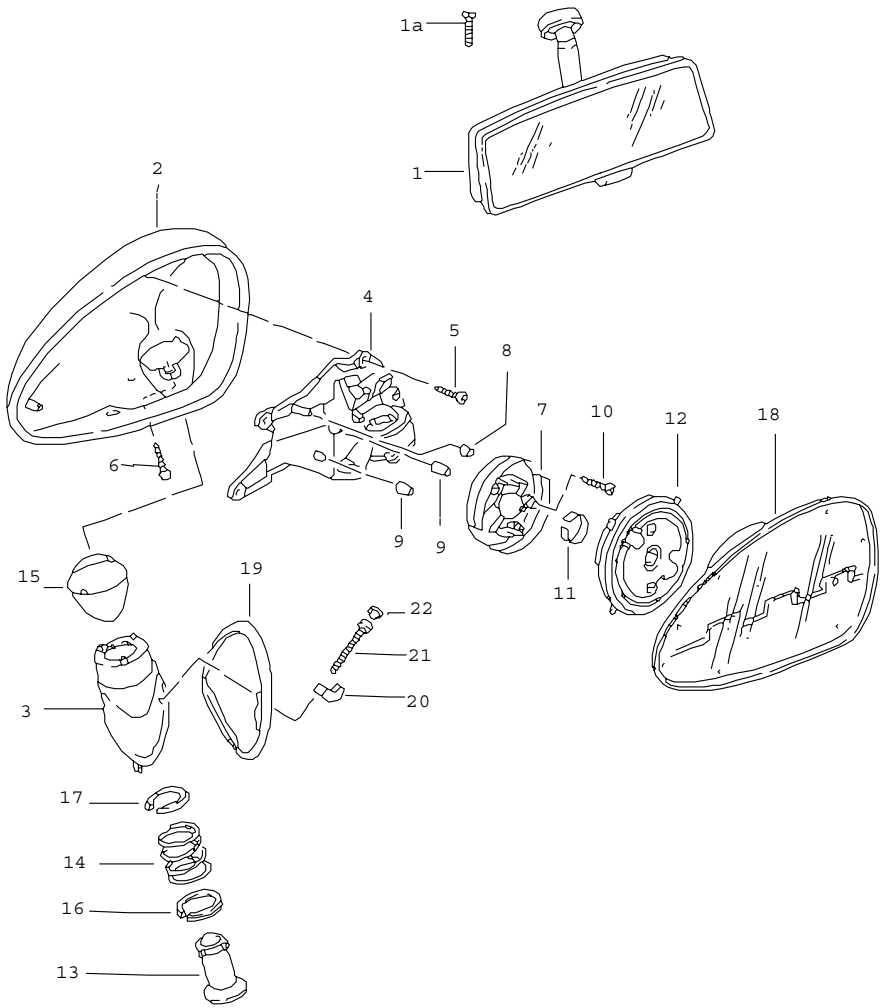

Pos	Part Number	Name	Remarks	Qty	Model
		interior mirror door mirror door mirror			CARRERA RS SPEEDSTER
1	477 857 511 A	interior mirror		1	CARRERA RS
	01C	black adhesive see group 8/05/00			
(1)	911 731 101 00	interior mirror		1	SPEEDSTER
	01C	black			
1A	999 219 032 02	countersunk-head screw micro-self-locking M 5 X 12		1	SPEEDSTER
2	965 731 243 00	mirror housing	/L	1	
	G2X	prime coated			
(2)	965 731 244 00	mirror housing	/R	1	
	G2X	prime coated			
3	965 731 241 00	mirror base	/LL/L	1	
	G2X	prime coated			
(3)	965 731 242 01	mirror base	/LL/R	1	
	G2X	prime coated			
(3)	965 731 241 01	mirror base	/RL/L	1	
	G2X	prime coated			
(3)	965 731 242 00	mirror base	/RL/R	1	
	G2X	prime coated			
4	965 731 245 01	reinforcement plate	/L	1	
(4)	965 731 246 01	reinforcement plate	/R	1	
5	999 919 109 02	countersunk-head screw 3,0 X 12		6	
6	999 919 110 02	oval-head screw 3 X 14		2	
7	964 731 767 00	plate with ball		2	
8	964 731 765 00	bush 3,8		2	

Pos	Part Number	Name	Remarks	Qty	Model	Pos	Part Number	Name	Remarks	Qty	Model
9	964 731 769 00	bush 8,8		4							
10	900 278 013 02	oval-head screw M 3 X 30		6							
11	964 731 771 00	spring		2							
12	964 731 763 00	disc with spherical hole		2							
13	965 731 257 00	bolt		2							
14	965 731 259 00	compression spring		2							
15	965 731 143 00	gasket	/L	1							
(15)	965 731 144 00	gasket	/R	1							
16	965 731 345 00	adjusting washer lower		2							
17	965 731 347 00	adjusting washer upper		2							
18	964 731 035 00	mirror glass plan	/L	1							
(18)	964 731 036 00	mirror glass plan	/R	1							
(18)	964 731 037 00	mirror glass convex	/L	1							
(18)	964 731 038 00	mirror glass convex	/R	1							
19	965 731 247 00	desk pad	/LL/L	1							
(19)	965 731 248 01	desk pad	/LL/R	1							
(19)	965 731 247 01	desk pad	/RL/L	1							
(19)	965 731 248 00	desk pad mirror base	/RL/R	1							
20	911 731 263 00	mounting piece		2							
21	999 218 021 02	pan-head screw micro-self-locking M 5 X 35		2							
22	999 703 137 40	cap		2							
		- -- E N D -- -									

Model	Year	MG	SG	Illustration	Restrictions	Update	18:09	24.11.2005	PORSCHE PET PORSCHE
964	94	8	09	809-15		194			

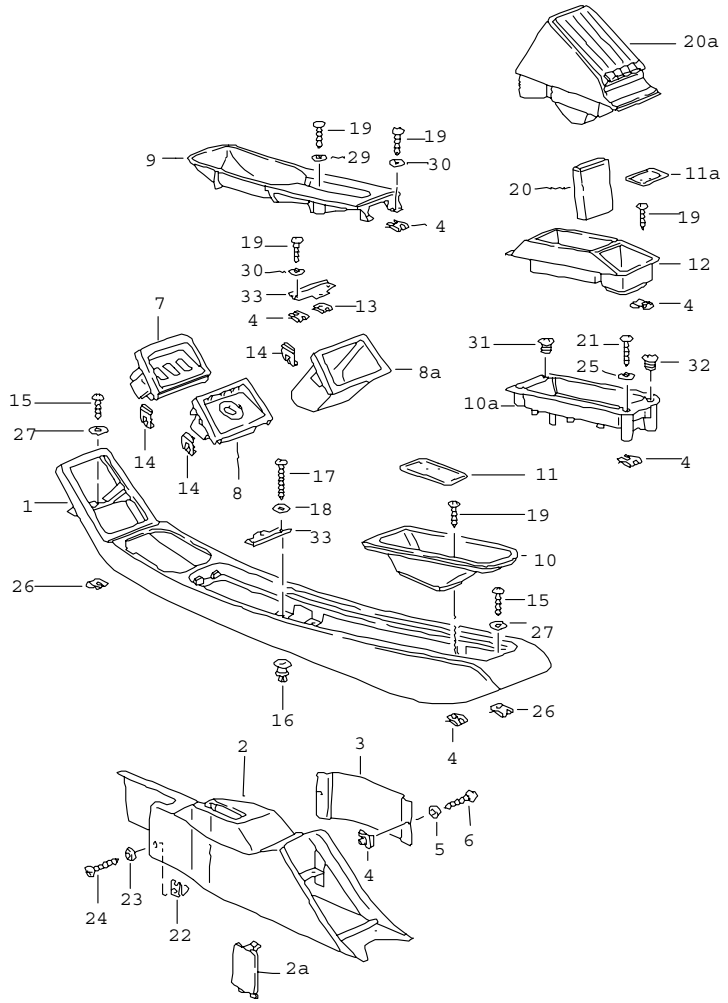

Pos	Part Number	Name	Remarks	Qty	Model
		centre console			
1	964 552 017 00	centre console upper part leatherette		1	
	05T	black			
	1MX	mahogany	-90		
	1KX	marine blue			
	3MX	burgundy	-90		
	4WX	linen	-90		
	7RT	cashmere beige			
	2WJ	classic grey	91-		
	9ZH	cobalt blue	91-		
	4WY	magenta	91-		
	1ZU	light grey	91-		
1	964 552 017 01	centre console upper part leather		1	
	KZ2	black	-90		
	TV1	mahogany	-90		
	TS1	marine blue	-90		
	UD5	caramel	-90		
	LG7	burgundy	-90		
	TW1	linen	-90		
	XN4	cashmere beige	-90		
	XN5	silk grey	-90		
	XN6	velvet red	-90		
	XN7	slate grey	-90		
	UD6	venetian blue	-90		
	8YR	black	91-		
	6XL	classic grey	91-		
	9YL	cobalt blue	91-		

Pos	Part Number	Name	Remarks	Qty	Model
	6YL	magenta	91-		
	8ZL	light grey	91-		
	4YU	cashmere beige	91-		
	H05	marine blue	91-		
	M05	matador red	91-		
	D35	carrara grey	91-		
	J25	sherwood green	91-		
	L37	rhodamine	92		
	J17	wimbledon green	92		
	E27	florentine grey	92		
	E38	rubicon grey	93		M 096
(2)	964 552 013 00	centre console lower part carpet	/LL -90	1	M 564
	5FV	black			
	5MF	mahogany	-90		
	4KV	marine blue			
	8MD	burgundy	-90		
	2XF	linen	-90		
	8UT	cashmere beige			
	7VT	silk grey	-90		
	9MT	velvet red	-90		
	3WT	slate grey	-90		
	5UM	caramel	-90		
	3KM	venetian blue	-90		
(2)	A 964 552 013 02	centre console lower part carpet	/LL 91-	1	
	5FV	black			
	4KV	marine blue			
	8UT	cashmere beige			
	4XR	classic grey	91-		
	4ZN	cobalt blue	91-		
	8WZ	magenta	91-		
	6YR	light grey	91-		
	M33	matador red	91-		
	D13	carrara grey	91-		
	J23	sherwood green	91-		
	M10	rhodamine	92		
	K20	wimbledon green	92		
	D50	florentine grey	92		
	8AS	rubicon grey	93		M 096
2	964 552 013 06	centre console airbag lower part carpet	/LL 91-	1	
	5FV	black			
	4KV	marine blue			
	8UT	cashmere beige			
	4XR	classic grey	91-		
	4ZN	cobalt blue	91-		
	8WZ	magenta	91-		
	6YR	light grey	91-		
	M33	matador red	91-		
	D13	carrara grey	91-		
	J23	sherwood green	91-		
	M10	rhodamine	92		
	K20	wimbledon green	92		
	D50	florentine grey	92		
	8AS	rubicon grey	93		M 096
(2)	964 552 013 01	centre console lower part carpet	/RL	1	

Pos	Part Number	Name	Remarks	Qty	Model
	5FV	black			
	5MF	mahogany	-90		
	4KV	marine blue			
	8MD	burgundy	-90		
	2XF	linen	-90		
	8UT	cashmere beige			
	7VT	silk grey	-90		
	9MT	velvet red	-90		
	3WT	slate grey	-90		
	5UM	caramel	-90		
	3KM	venetian blue	-90		
	4XR	classic grey	91-		
	4ZN	cobalt blue	91-		
	8WZ	magenta	91-		
	6YR	light grey	91-		
	M33	matador red	91-		
	D13	carrara grey	91-		
	J23	sherwood green	91-		
	M10	rhodamine	92		
	K20	wimbledon green	92		
	D50	florentine grey	92		
	8AS	rubicon grey	93		M 096
2A	993 552 523 00	cover		1	
	01C	satin black			
3	964 552 133 00	cover carpet		1	
	5FV	black			
	5MF	mahogany	-90		
	4KV	marine blue			
	8MD	burgundy	-90		

Pos	Part Number	Name	Remarks	Qty	Model
	2XF	linen	-90		
	8UT	cashmere beige			
	7VT	silk grey	-90		
	9MT	velvet red	-90		
	3WT	slate grey	-90		
	5UM	caramel	-90		
	3KM	venetian blue	-90		
	4XR	classic grey	91-		
	4ZN	cobalt blue	91-		
	8WZ	magenta	91-		
	6YR	light grey	91-		
	M33	matador red	91-		
	D13	carrara grey	91-		
	J23	sherwood green	91-		
	M10	rhodamine	92		
	K20	wimbledon green	92		
	D50	florentine grey	92		
	8AS	rubicon grey	93		M 096
4	999 591 349 02	speed nut B 3,5		8	
5	999 591 102 17	washer 3,5		2	
6	900 145 041 07	tapping screw B 3,5 X 16		2	
7	964 552 135 01	cover		1	
	1DB	black upper			
8	964 552 071 00	cover	89	1	
	1DB	black centre			
8	964 552 071 04	cover	90-	1	C.4

Pos	Part Number	Name	Remarks	Qty	Model
	1DB	black centre			
(8)	964 552 071 03	cover	90-	1	C.2
	1DB	black centre			
8A	964 552 157 00	package box		1	TURBO
	1DB	black			
9	964 552 539 00	cover		1	
	1DB	black parking-brake lever			
10	964 552 159 00	cup		1	
	1DB	black			
10A	964 552 551 00	bracket		1	M 195/612
	1DB	black			
11	964 552 121 00	insert		1	
	01C	black			
11A	964 552 715 00	insert		1	
	01C	black			
12	964 552 553 00	cassette box		1	
	1DB	black			
13	999 591 725 02	speed nut B 3,5		2	
14	944 552 557 00	spring clamp		4	
15	900 143 007 02	tapping screw B 4,2 X 13		6	
16	999 591 919 40	expander nut B 4,8		2	
17	900 143 088 07	tapping screw B 4,8 X 32		2	
18	N 011 665 3	washer B 5,3		2	
19	N 013 958 14	tapping screw B 3,5 X 13		7	
20	964 552 753 00	cassette box		4	
	01C	black			
20A	EXC 993 017 70	box for cds for leather black		1 5	COUPE
20A	EXC 993 017 80	box for cds for leather black		1 8	
21	N 013 959 3	tapping screw B 3,5 X 16		4	
22	999 591 850 02	speed nut B 4,2		4	
23	999 591 116 07	cone washer 4,5		2	
24	N 014 093 3	tapping screw B 4,2 X 13		2	
25	N 011 663 1	washer B 3,7		2	
26	999 591 331 02	speed nut B 4,2		6	
27	900 151 028 02	washer B 4,3		6	
29	N 011 663 4	washer B 3,7		1	
30	900 025 013 07	washer A 3,7		4	
31	999 703 376 40	plug 12 PE SW		1	M 195/612
32	999 703 377 40	plug		1	M 195/612
33	964 552 543 00	reinforcement		2	

- -- E N D -- -

Model	Year	MG	SG	Illustration	Restrictions	Update	18:09	24.11.2005	PORSCHE PET PORSCHE
964	94	8	10	810-00		194			

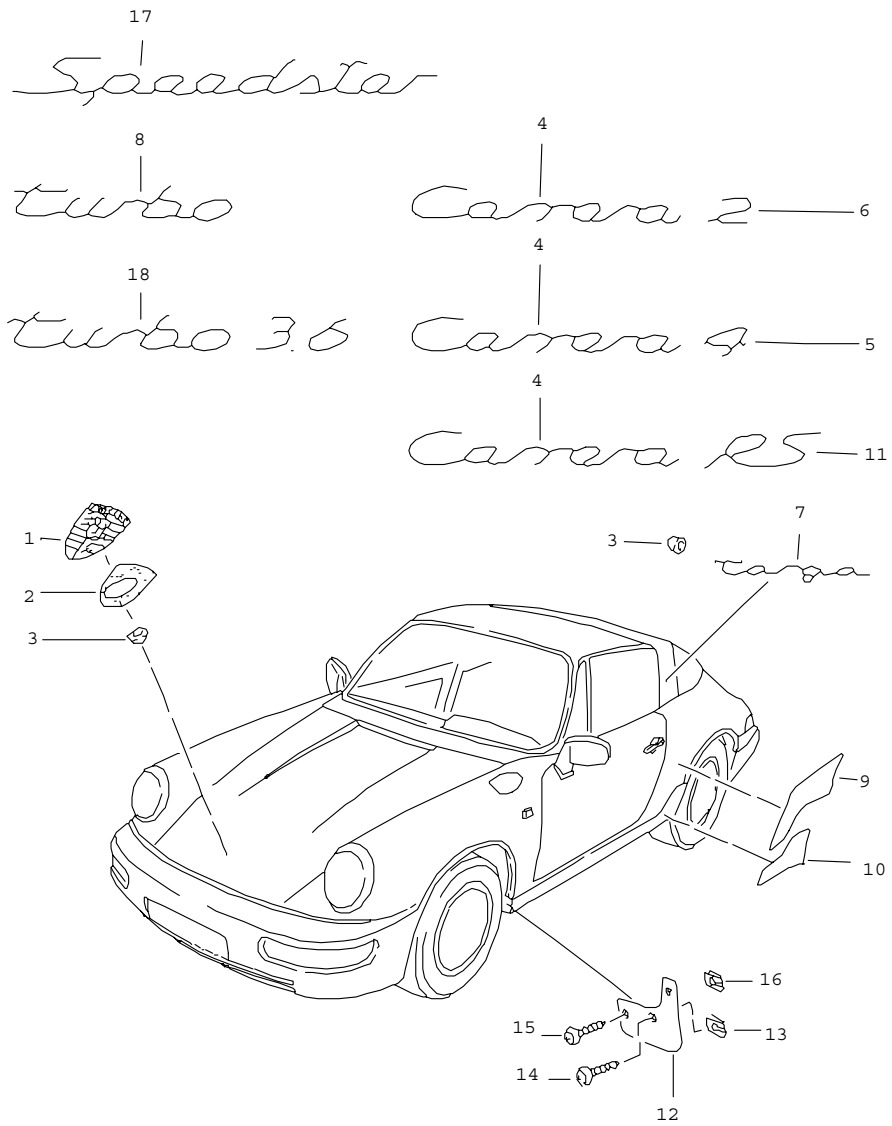

Pos	Part Number	Name	Remarks	Qty	Model
		insignias stone guard film			
1	A 901 559 210 20	lid emblem		1	
1	993 559 211 00	lid emblem		1	
2	901 559 215 20	desk pad		1	
3	999 591 423 03	tapping nut		2	
4	911 559 037 00	logo		1	
	70C	black			
5	964 559 241 00	logo		1	
	70C	black			
6	964 559 241 01	logo		1	
	70C	black			
7	911 559 307 41	logo	-93	2	
8	930 559 317 02	logo		1	
	70C	black			
9	965 559 325 00	stone guard film	/L	1	TURBO/ TURBO-LOOK
		large			
	3YK	clear			
(9)	965 559 326 00	stone guard film	/R	1	TURBO/ TURBO-LOOK
		large			
	3YK	clear			
(9)	965 559 325 02	stone guard film	/L	1	TURBO/ TURBO-LOOK
		small			
	3YK	clear			
(9)	965 559 326 02	stone guard film	/R	1	TURBO/ TURBO-LOOK
		small			
	3YK	clear			
9	965 559 325 01	stone guard film	/L	1	TURBO/ TURBO-LOOK
		large			
	3YB	grand prix white			

Pos	Part Number	Name	Remarks	Qty	Model
	Z07	polar silver metallic			
(9)	965 559 326 01	stone guard film large	/R	1	TURBO/ TURBO-LOOK
	3YB	grand prix white			
	Z07	polar silver metallic			
(9)	965 559 325 03	stone guard film small	/L	1	TURBO/ TURBO-LOOK
	3YB	grand prix white			
	Z07	polar silver metallic			
(9)	965 559 326 03	stone guard film small	/R	1	TURBO/ TURBO-LOOK
	3YB	grand prix white			
	Z07	polar silver metallic			
10	965 559 327 00	stone guard film sill cover	/L	1	TURBO/ TURBO-LOOK
	3YK	clear			
(10)	965 559 328 00	stone guard film sill cover	/R	1	TURBO/ TURBO-LOOK
	3YK	clear			
10	965 559 327 01	stone guard film sill cover	/L	1	TURBO/ TURBO-LOOK
	3YB	grand prix white			
	Z07	polar silver metallic			
(10)	965 559 328 01	stone guard film sill cover	/R	1	TURBO/ TURBO-LOOK
	3YB	grand prix white			
	Z07	polar silver metallic			
11	964 559 241 02	logo		1	
	70C	black			

Pos	Part Number	Name	Remarks	Qty	Model
12	965 559 615 00	stone guard	/L	1	TURBO/ TURBO-LOOK
	01C	satin black			
(12)	965 559 616 00	stone guard	/R	1	TURBO/ TURBO-LOOK
	01C	satin black			
13	999 591 463 02	speed nut B 4,2		4	TURBO/ TURBO-LOOK
14	900 143 156 07	screw B 4,2 X 16		4	TURBO/ TURBO-LOOK
15	-	screw see group 8/01/50			
16	-	speed nut see group 8/01/50			
17	964 559 221 00	logo		1	
	70C	black			
18	965 559 221 00	logo		1	
19	964 559 221 01	logo		1	M 096
	4PU	silver			

- -- E N D -- -

Model	Year	MG	SG	Illustration	Restrictions	Update	18:09	24.11.2005	PORSCHE PET PORSCHE
964	94	8	10	810-05		194			

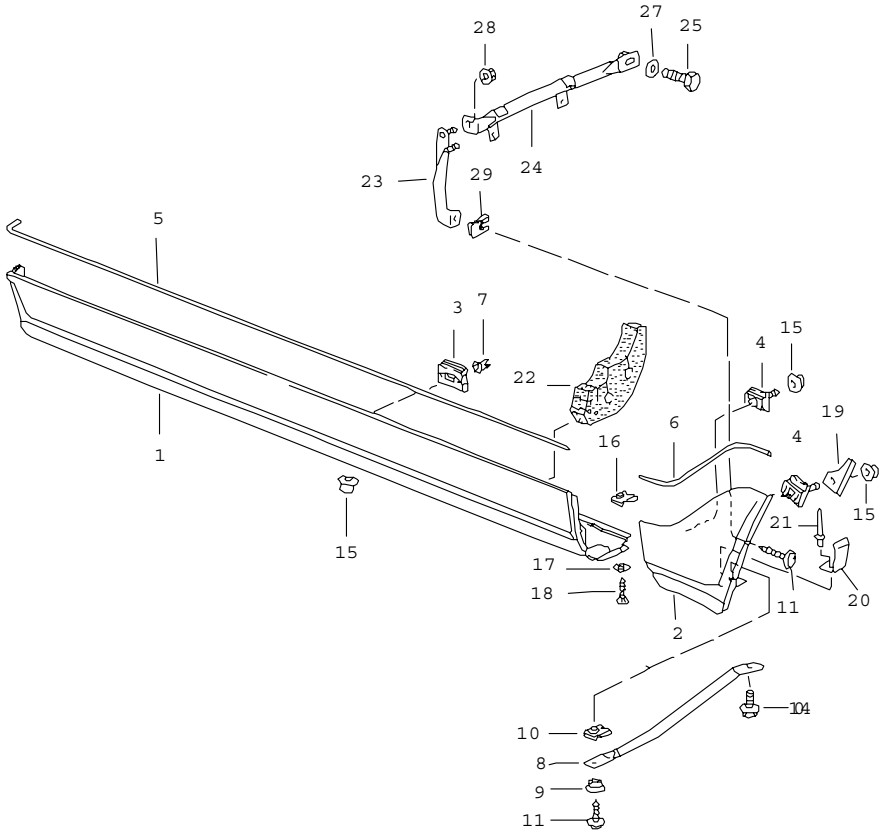

Pos	Part Number	Name	Remarks	Qty	Model
		sill cover			
1	964 559 093 01	sill cover	/V/L	1	CARRERA 2/4 CARRERA RS
	G2X	prime coated			
(1)	965 559 193 01	sill cover	/V/L	1	TURBO/ TURBO-LOOK
	G2X	prime coated			
(1)	964 559 094 01	sill cover	/V/R	1	CARRERA 2/4 CARRERA RS
	G2X	prime coated			
(1)	965 559 194 01	sill cover	/V/R	1	TURBO/ TURBO-LOOK
	G2X	prime coated			
2	964 559 095 01	sill cover	/H/L	1	CARRERA 2/4 CARRERA RS
	G2X	prime coated			
(2)	965 559 195 00	sill cover	/H/L	1	TURBO/ TURBO-LOOK
	G2X	prime coated			
(2)	964 559 096 01	sill cover	/H/R	1	CARRERA 2/4 CARRERA RS
	G2X	prime coated			
(2)	965 559 196 00	sill cover	/H/R	1	TURBO/ TURBO-LOOK
	G2X	prime coated			
3	999 591 916 40	clip		12	CARRERA 2/4 CARRERA RS
3	999 591 991 40	clip $ 5,8		14	TURBO/ TURBO-LOOK
4	A 999 507 373 00	support	-90	6	CARRERA 2/4
4	999 507 373 00	support		6	CARRERA 2/4 CARRERA RS
4	999 591 990 00	support T 5		6	TURBO/ TURBO-LOOK
5	964 559 293 01	cover strip	/V/L	1	CARRERA 2/4 CARRERA RS

Pos	Part Number	Name	Remarks	Qty	Model
	70B	black			
	70A	black			
	01C	black			
(5)	964 559 294 01	cover strip	/V/R	1	CARRERA 2/4 CARRERA RS
	70B	black			
	70A	black			
	01C	black			
(5)	965 559 293 00	cover strip	/V/L	1	TURBO/ TURBO-LOOK
	70A	black	-91		
	01C	black			
(5)	965 559 294 00	cover strip	/V/R	1	TURBO/ TURBO-LOOK
	70A	black	-91		
	01C	black			
6	964 559 295 01	cover strip	/H/L	1	CARRERA 2/4 CARRERA RS
	70B	black			
	70A	black	-91		
	01C	black			
(6)	964 559 296 01	cover strip	/H/R	1	CARRERA 2/4 CARRERA RS
	70B	black			
	70A	black	-91		
	01C	black			
(6)	965 559 295 00	cover strip	/H/L	1	TURBO/ TURBO-LOOK
	70A	black			
	01C	black			
(6)	965 559 296 00	cover strip	/H/R	1	TURBO/ TURBO-LOOK
	70A	black			

Pos	Part Number	Name	Remarks	Qty	Model
	01C	black			
7	999 702 160 40	grommet 4,5 X 9 X 14		12	CARRERA 2/4 CARRERA RS
7	999 702 160 40	grommet 4,5 X 9 X 14		14	TURBO/ TURBO-LOOK
8	964 559 501 01	bracket	/H/L	1	CARRERA 2/4 CARRERA RS
(8)	964 559 502 01	bracket	/H/R	1	CARRERA 2/4 CARRERA RS
9	944 503 255 00	spacer		2	
10	999 591 699 02	speed nut B 4,8		2	
11	900 143 149 07	screw B 4,8 X 16		4	
14	900 075 354 00	screw M 6 X 16		2	
15	999 049 022 40	plastic nut T 5		14	
16	999 591 883 02	speed nut B 4,8		2	CARRERA 2/4 CARRERA RS
17	900 025 053 07	washer A 5,3		2	CARRERA 2/4 CARRERA RS
18	900 143 147 07	tapping screw B 4,8 X 16		2	CARRERA 2/4 CARRERA RS
19	964 559 797 00	clamping piece	/H/L	1	
(19)	964 559 798 00	clamping piece	/H/R	1	
20	965 559 795 00	clamping piece		2	TURBO/ TURBO-LOOK
21	999 190 104 30	blind rivet A 3,2 X 7,9		2	TURBO/ TURBO-LOOK
22	964 559 522 00	rubber insert	/H/R	1	
23	965 559 471 00	retaining bracket	/L	1	TURBO/ TURBO-LOOK
(23)	965 559 472 00	retaining bracket	/R	1	TURBO/ TURBO-LOOK
24	965 559 271 00	support tube	/L	1	TURBO/ TURBO-LOOK

Pos	Part Number	Name	Remarks	Qty	Model	Pos	Part Number	Name	Remarks	Qty	Model
(24)	965 559 272 00	support tube	/R	1	TURBO/ TURBO-LOOK						
25	900 075 403 00	hexagon-head bolt M 6 X 14		2	TURBO/ TURBO-LOOK						
27	A N 011 666 12	washer B 6,4		2	TURBO/ TURBO-LOOK						
27	900 025 047 07	washer A 6,4		2	TURBO/ TURBO-LOOK						
28	999 049 009 40	plastic nut T 5		4	TURBO/ TURBO-LOOK						
29	999 591 485 02	speed nut B 4,8		2	TURBO/ TURBO-LOOK						
		- -- E N D -- -									

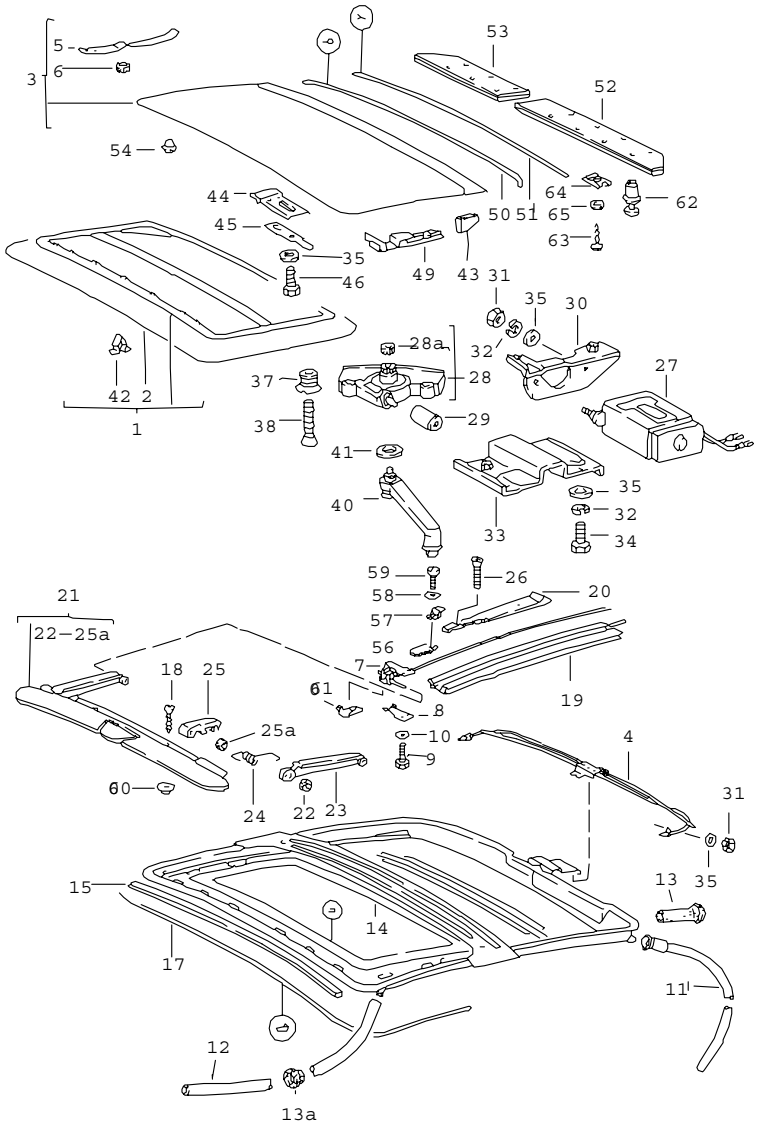

Pos	Part Number	Name	Remarks	Qty	Model
		sunroof			
		see technical information GR.6 NR.1/92			
1	964 564 020 00	roof frame		1	
	700	black			
	1MX	mahogany	-90		
	1KX	marine blue			
	8LC	burgundy	-90		
	4WH	classic grey	91-		
	2YR	cobalt blue	91-		
	5VW	magenta	91-		
	1SY	rubicon grey	93		M 096
2	964 564 201 00	cover		1	
	700	black			
	8LC	burgundy	-90		
	1MX	mahogany	-90		
	1KX	marine blue			
	4WH	classic grey	91-		
	2YR	cobalt blue	91-		
	5VW	magenta	91-		
	1SY	rubicon grey	93		M 096
3	964 564 051 01	cover		1	
4	964 564 231 00	pipeline		1	
5	911 564 417 00	leaf spring		2	
6	911 564 420 00	knurled nut		2	
(7)	964 564 143 00	guide	/L	1	
7	964 564 144 00	guide	/R	1	
8	901 564 451 05	reinforcement		2	
9	900 075 106 02	hexagon-head bolt M 4 X 6		4	

Pos	Part Number	Name	Remarks	Qty	Model
10	900 025 002 02	washer A 4,3		4	
11	944 564 235 04	water drain hose	/H	2	
12	964 564 725 00	water drain hose 8 X 1 X 1000	/V	2	
13	911 564 297 00	grommet	/H	2	
13A	999 703 348 40	rubber sleeve	/V	4	
14	911 564 465 00	beading		1	
15	911 564 409 00	sealing strip		1	
17	911 564 191 00	velvet strip		1	
18	900 145 093 07	oval-head sheetmetal screw BZ 3,9 X 9,5		2	
(19)	964 564 341 00	guide rail	/L	1	
19	964 564 342 00	guide rail	/R	1	
20	911 564 047 01	intermediate piece		2	
21	964 564 005 01	air deflector		1	
	70K	black			
22	911 564 423 00	rubber stop		2	
23	911 564 127 00	hinge		2	
24	964 564 125 00	spring	/L	1	
(24)	964 564 126 00	spring	/R	1	
25	911 564 123 00	clip		2	
25A	911 564 301 00	spacer ring		2	
26	900 270 060 07	countersunk-head screw M 4 X 10		4	
27	911 624 016 03	motor		1	
28	911 564 601 01	transmission		1	
28A	928 564 125 02	drive pinion		1	
29	911 624 103 00	clutch		1	
30	911 624 007 01	engine support		1	
31	N 011 005 14	hexagon nut M 5		2	
32	N 012 005 3	lock ring B 5		4	
33	964 564 035 00	gear support		1	
34	N 010 225 4	hexagon-head bolt M 5 X 8		2	
35	900 025 003 02	washer A 5,3		10	
37	901 564 661 05	screw		2	
38	900 269 012 02	countersunk-head screw M 4 X 25		2	
40	901 564 085 05	crank		1	
41	911 564 643 00	washer		3	
42	901 564 299 05	clamp		7	
43	901 564 431 05	guide shoe		2	
44	911 564 045 00	guide		2	
45	911 564 451 00	tab washer		2	
46	911 564 459 00	screw AM 5 X 12		4	
49	911 564 433 00	support		2	
(49)	964 564 435 00	support		1	
50	911 564 193 00	velvet strip small		1	
51	901 564 905 05	sealing rubber rear		1	
52	911 564 025 01	cover F >>96MS4 00314	/L	1	
(52)	964 556 025 00	cover F 96MS4 00315>>	/L	1	
(52)	964 556 025 00	cover	/L	1	
53	911 564 026 00	cover F >>96MS4 00314	/R	1	
(53)	911 556 026 00	cover F 96MS4 00315>>	/R	1	
54	999 703 013 50	plug		2	
56	911 564 425 00	threaded plate		2	

Pos	Part Number	Name	Remarks	Qty	Model
57	911 564 165 00	terminal piece		2	
58	900 025 053 07	washer A 5,3		2	
59	900 146 106 07	oval-head screw M 5 X 12		2	
60	911 564 521 00	protection cap		2	
61	964 564 241 00	slide		2	
62	999 591 941 40	expansion rivet $=6 POM SW F 96MS4 00315>>		10	
63	900 145 079 07	tapping screw B 4,8 X 19 F >>96MS4 00314		4	
64	999 507 041 09	speed nut B 4,8 F >>96MS4 00314		4	
65	999 704 605 07	cone washer 5,3 F >>96MS4 00314		4	
		- -- E N D -- -			

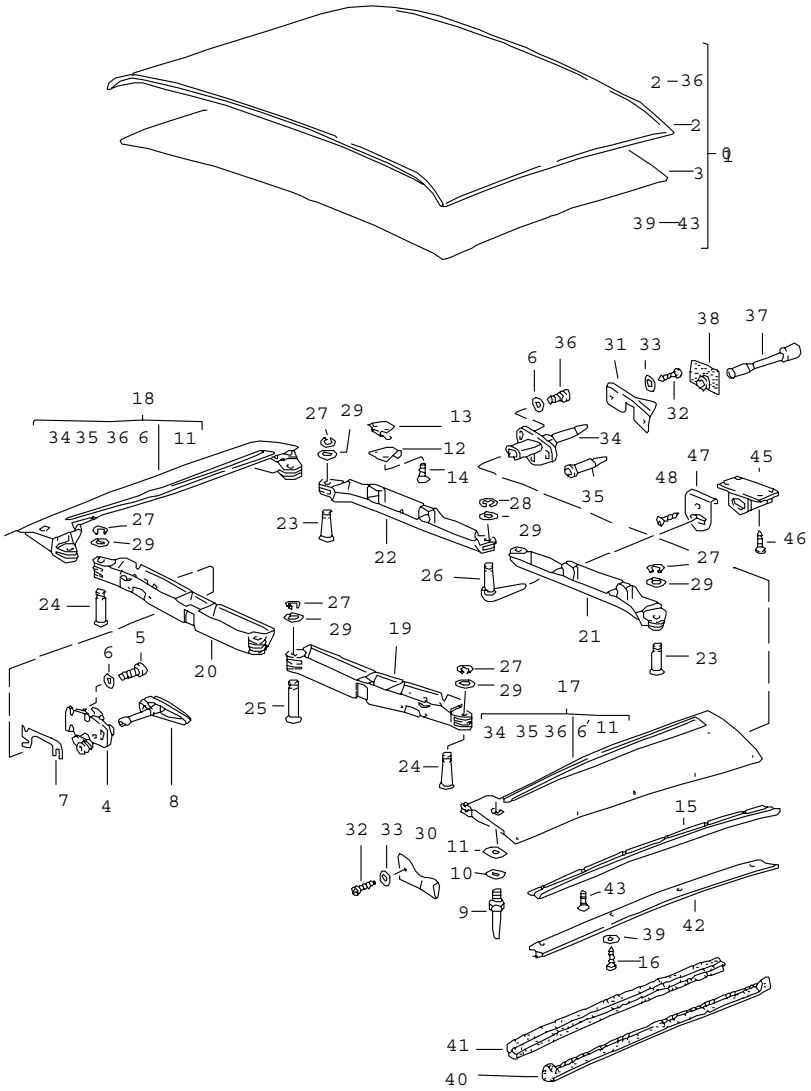

Pos	Part Number	Name	Remarks	Qty	Model
		soft top			TARGA
1	964 565 002 00	soft top	-92	1	
	707	black			
1	964 565 002 01	soft top	93-	1	
	707	black			
2	964 565 035 00	outer lining	-92	1	
	707	black			
2	964 565 035 01	outer lining	93-	1	
	707	black			
3	901 565 036 43	inner lining		1	
	700	black			
4	911 565 031 64	catch	/L	1	
	70C	black			
(4)	911 565 032 64	catch	/R	1	
	70C	black			
5	900 067 117 07	pan-head screw M 6 X 16		6	
6	N 011 524 7	washer A 6,4		12	
7	911 565 707 01	shim		2	
8	911 565 075 62	handle		2	
	70B	black			
9	911 565 214 60	locating peg		2	
10	N 011 525 15	washer A 8,4		2	
11	901 565 203 40	threaded plate		2	
12	W 964 565 265 00	latch		8	
12	964 565 265 00	latch		8	
13	W 911 565 263 00	clamp		4	
14	999 219 006 02	countersunk-head screw M 4 X 8		16	

Pos	Part Number	Name	Remarks	Qty	Model
15	911 565 301 00	rain channel	/L	1	
	70K	black			
(15)	911 565 302 00	rain channel	/R	1	
	70K	black			
16	N 013 957 5	tapping screw B 3,5 X 9,5		8	
17	911 565 029 46	roof frame	/L	1	
	70B	black lateral			
18	911 565 030 46	roof frame	/R	1	
	70B	black lateral			
19	911 565 207 46	roof frame	/L	1	
	70B	black			
		front			
20	911 565 208 46	roof frame	/R	1	
	70B	black front			
21	911 565 211 45	roof frame	/L	1	
	70B	black rear			
22	911 565 212 45	roof frame	/R	1	
	70B	black rear			
23	964 565 765 01	bolt		2	
	01C	black			
24	964 565 765 02	bolt		2	
	01C	black			
25	964 565 765 00	bolt		1	
	01C	black			
26	964 565 145 00	locking bolt		1	
27	900 041 004 01	circlip		5	
28	N 012 439 2	lock washer		1	
29	999 234 003 40	washer 10,5 X 16		5	
30	911 565 283 00	cover	/V/L	1	
(30)	911 565 284 00	cover	/V/R	1	
31	901 565 273 45	cover	/H/L	1	
(31)	901 565 274 45	cover	/H/R	1	
32	N 013 953 10	tapping screw B 2,9 X 9,5		8	
33	900 025 001 02	washer A 3,2		8	
34	911 565 037 42	silentbloc	/L	1	
(34)	911 565 038 42	silentbloc	/R	1	
35	911 565 217 40	covering		2	
36	N 014 765 2	pan-head screw M 6 X 10		6	
37	911 565 220 41	silentbloc		2	
38	901 565 361 40	seal		2	
39	900 151 028 02	washer B 4,3		8	
40	911 565 193 00	gasket	/L	1	
	4DG	black	90		
	8VB	black outer			
(40)	911 565 194 00	gasket	/R	1	
	8VB	black outer			
41	911 565 795 00	gasket inner		2	
42	911 565 793 00	rail	/L	1	
(42)	911 565 794 00	rail	/R	1	
43	900 278 022 02	screw M M 3 X 10		14	

Pos	Part Number	Name	Remarks	Qty	Model	Pos	Part Number	Name	Remarks	Qty	Model
45	911 565 187 40	mounting locking bolt		1							
46	N 013 957 5	tapping screw B 3,5 X 9,5		4							
47	911 565 189 41	cover plate		1							
48	900 145 003 07	tapping screw B 3,5 X 9,5		1							
		- -- E N D -- -									

Model	Year	MG	SG	Illustration	Restrictions	Update	18:10	24.11.2005	PORSCHE PET PORSCHE
964	94	8	11	811-06		194			

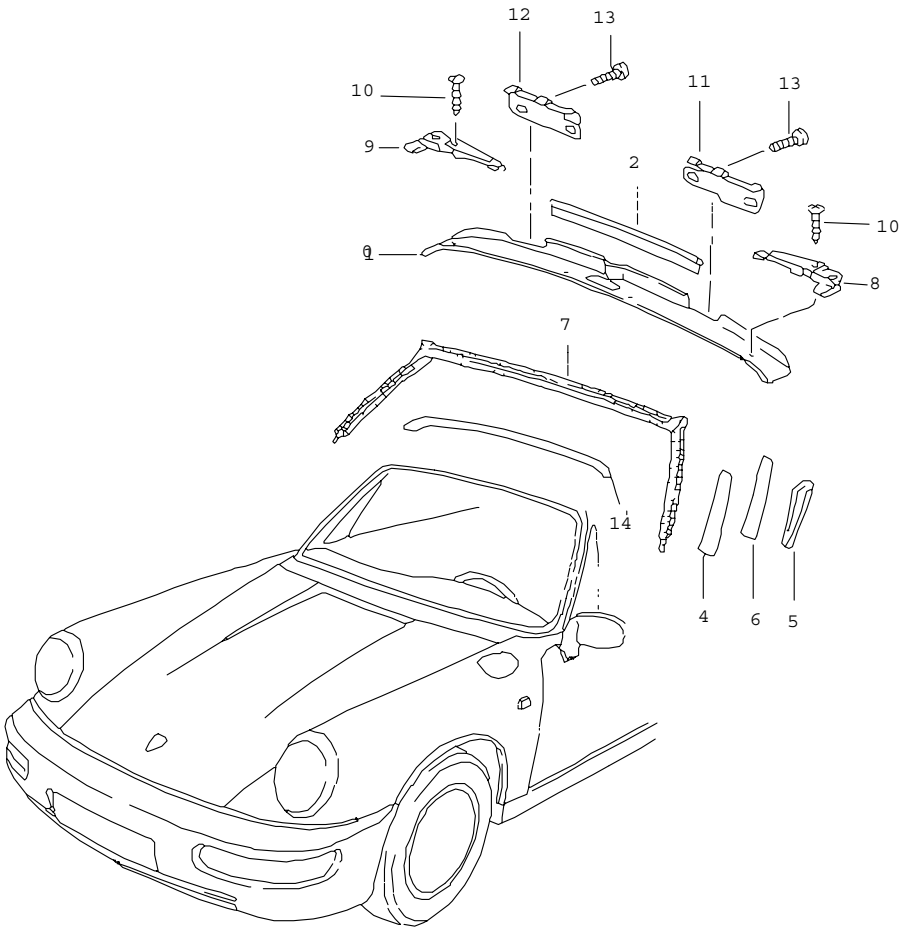

Pos	Part Number	Name	Remarks	Qty	Model
		windscreen frame accessories			TARGA/CABRIO
1	911 555 059 61	lining		1	
	702	black			
2	911 561 499 00	piping		1	
	70B	black			
4	964 555 563 00	desk pad	/L	1	
(4) A	964 555 563 00	desk pad 5 X 35 X 400	/R	1	
5	911 555 419 00	filler piece	/L	1	
(5)	911 555 420 00	filler piece	/R	1	
6	964 555 507 40	cover	/L	1	
	702	black			
(6)	964 555 508 40	cover	/R	1	
	702	black			
7 W	911 799 565 80	gasket		1	
7	911 799 565 80	gasket		1	
8	911 555 519 42	guide rose	/L	1	TARGA
	70B	black			
(8)	911 555 519 60	guide rose	/L	1	CABRIO
	70B	black			
9	911 555 520 42	guide rose	/R	1	TARGA
	70B	black			
(9)	911 555 520 60	guide rose	/R	1	CABRIO
	70B	black			
10	900 143 084 07	oval-head sheetmetal screw B 3,5 X 16		4	
11	911 561 729 03	guide	/L	1	TARGA
	03C	black			
(11)	911 561 739 03	guide	/L	1	CABRIO
	03C	black			

Pos	Part Number	Name	Remarks	Qty	Model
12	911 561 730 03	guide	/R	1	TARGA
	03C	black			
(12)	911 561 740 03	guide	/R	1	CABRIO
	03C	black			
13	999 119 013 07	pan-head screw M 6 X 12		4	
14	964 504 729 00	protective film		1	TARGA
		- -- E N D -- -			

Pos	Part Number	Name	Remarks	Qty	Model

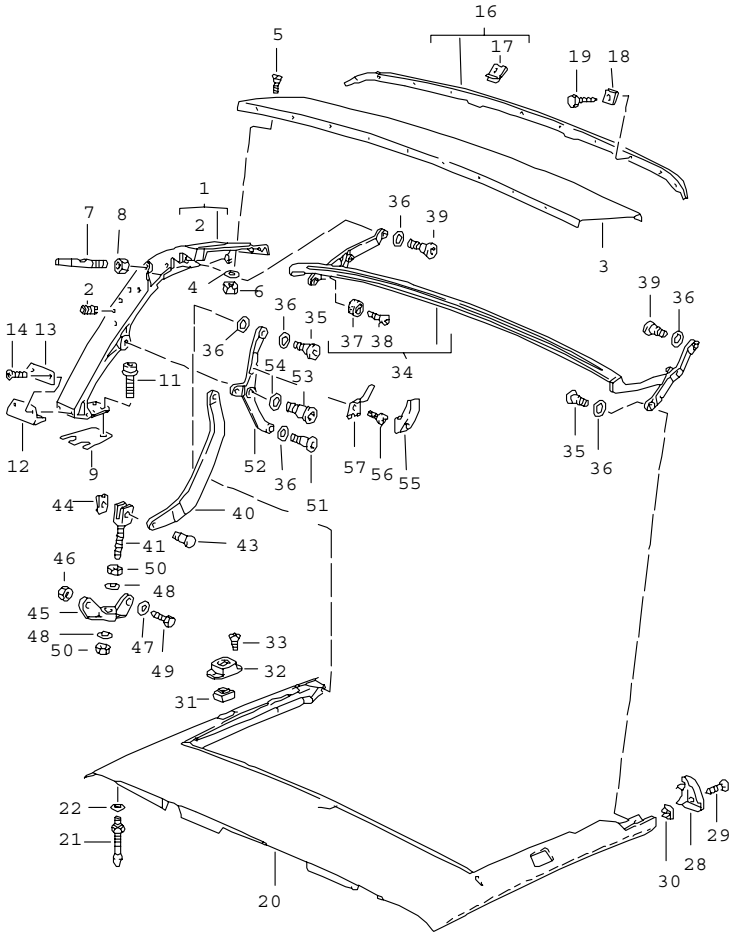

Pos	Part Number	Name	Remarks	Qty	Model
		main folding top bow roof frame single parts			CABRIO
(1)	911 561 927 00	main folding top bow	/L	1	
	70B	black			
1	911 561 928 00	main folding top bow	/R	1	
	70B	black			
2	999 504 069 02	threaded insert M 6		4	
3	911 561 215 00	bow plate		1	
4	900 025 003 02	washer A 5,3		10	
5	900 269 017 02	countersunk-head screw M 5 X 12		10	
6	900 910 007 02	lock nut M 5		10	
7	911 561 449 65	retaining pivot		2	
8	900 076 062 07	hexagon nut M 8		2	
9	911 561 423 00	plate 2 MM		X	
9	911 561 423 01	plate 1 MM		X	
11	900 067 271 09	screw M 8 X 20		6	
12	911 561 471 00	gasket		2	
13	911 561 475 00	plate		2	
14	900 269 056 07	countersunk-head screw M 4 X 10		4	
16	911 561 035 00	rail		1	
17	999 507 018 02	speed nut B 4,2		11	
18	911 561 527 00	wedge		11	
19	900 187 017 02	tapping screw BZ 4,2 X 19		11	
20	911 561 027 01	roof frame		1	

Pos	Part Number	Name	Remarks	Qty	Model
	700	black			
21	911 565 214 60	locating peg		2	
22	N 011 525 15	washer A 8,4 X 16 X 1,6		2	
28	911 561 139 65	end piece	/L	1	
(28)	911 561 140 65	end piece	/R	1	
29	N 014 086 12	tapping screw 3,5 X 13		2	
30	999 591 762 40	special nut B 3,5		2	
31	911 561 453 00	buffer		2	
32	911 561 451 00	housing		2	
	70B	black			
33	900 269 043 02	countersunk-head screw M 4 X 12		4	
34	911 561 019 65	intermed. folding top bow		1	
	70B	black			
35	911 561 461 00	screw M 8 X 20		4	
36	911 561 428 00	washer 10,5		10	
37	911 561 402 00	eccentric washer		2	
38	N 033 185 1	countersunk-head screw M 4 X 16		2	
39	911 561 421 00	screw M 8 X 24		2	
(40)	964 561 157 00	lever	/L	1	
	70B	black			
40	964 561 158 00	lever	/R	1	
	70B	black			
41	911 561 595 65	joint fork		2	
43	911 561 761 65	bolt		2	
44	999 166 034 02	sl-lock 8		2	
45	964 561 431 00	bearing bracket		2	
46	900 910 003 02	lock nut M 8		4	
47	900 223 001 02	washer A 8,4		4	
48	A 900 025 008 09	washer		4	
48	900 025 008 09	washer A 10,5		4	
49	900 075 078 02	hexagon-head bolt M 8 X 15		4	
50	N 011 010 13	hexagon nut M 10		4	
51	911 561 418 00	screw M 8 X 20		2	
(52)	911 561 119 65	lever	/L	1	
	70B	black			
52	911 561 120 65	lever	/R	1	
	70B	black			
53	911 561 420 00	screw micro-self-locking M 10 X 28		2	
54	911 561 430 00	washer 13,5		2	
55	901 552 871 40	cover		2	
56	900 250 006 02	tapping screw AM 5 X 10		2	
57	901 552 872 20	coat hook		2	
		- -- E N D -- -			

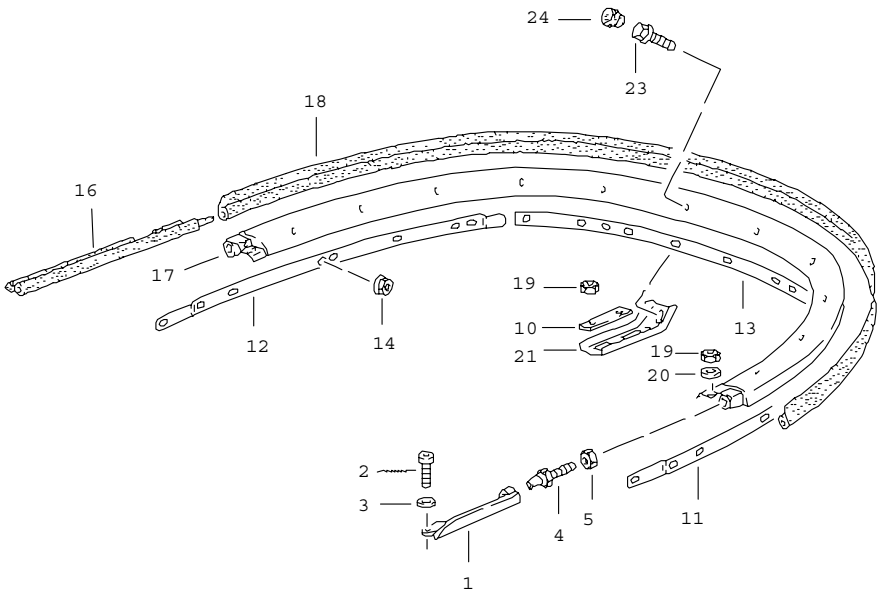

Pos	Part Number	Name	Remarks	Qty	Model
		convertible top clamp single parts			CABRIO
1	911 561 341 01	tensioner blade	/L	1	
(1)	911 561 342 01	tensioner blade	/R	1	
2	N 014 765 2	pan-head screw M 6 X 10		2	
3	N 011 524 7	washer A 6,4		2	
4	911 561 331 00	locating peg		2	
5	900 076 062 07	hexagon nut M 8		2	
10	911 561 387 00	desk pad		3	
	GRV	prime coated			
11	911 561 283 00	rail	/L	1	
12	911 561 284 00	rail	/R	1	
13	911 561 281 00	rail centre		1	
14	900 377 009 02	hexagon nut M 5		18	
(16)	911 561 463 00	gasket	/L	1	
16	911 561 464 00	gasket	/R	1	
17	911 561 083 01	clamp		1	
	700	black			
18	911 561 371 00	sealing rubber		1	
19	900 076 010 02	hexagon nut M 6		8	
20	N 011 524 7	washer A 6,4		2	
21	911 561 379 01	support		3	
23	900 075 357 02	screw M 6 X 12		3	
24	999 703 169 40	cap 16 X 22 X 13		3	
		- -- E N D -- -			

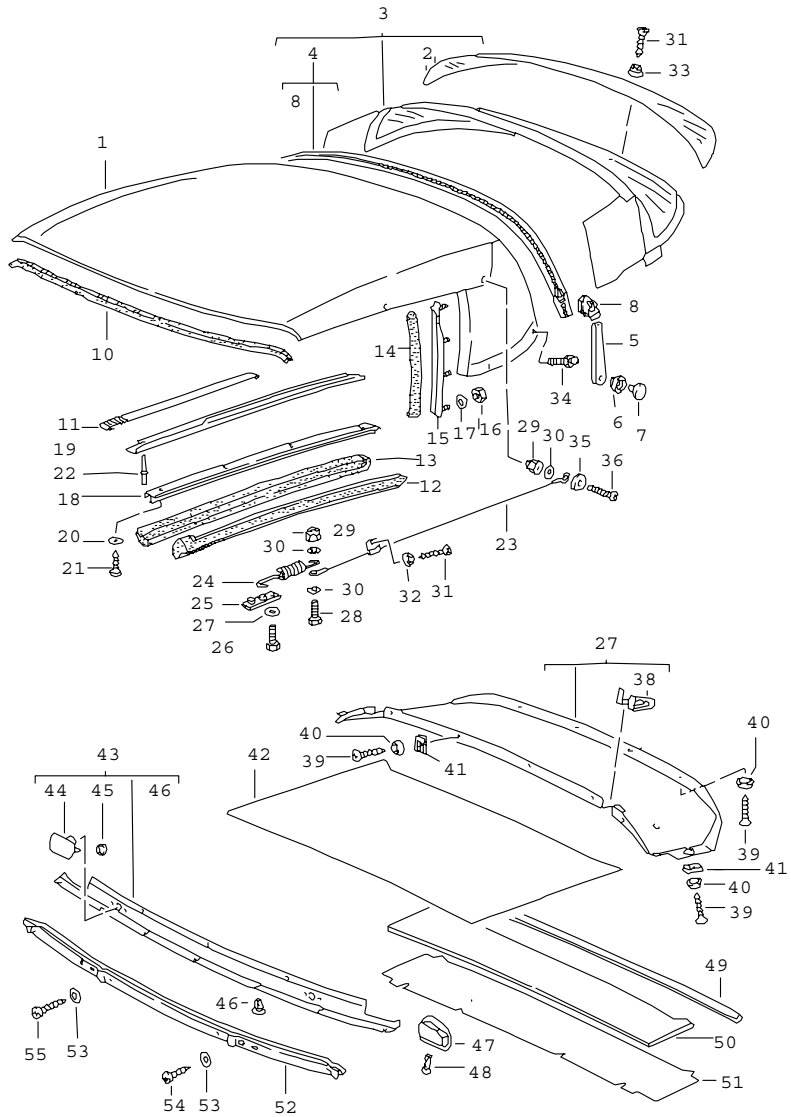

Pos	Part Number	Name	Remarks	Qty	Model
		convertible top covering seal single parts			CABRIO
1	911 561 051 01	convertible top covering roof		1	
	6HA	dark blue	90		
	7JW	blue/black			
	7MH	mahogany	90		
	3WW	mahogany	90		
	7MK	burgundy	90		
	9LW	burgundy	90		
	2XW	black			
	3ZL	cobalt blue	91-		
	5YH	magenta	91-		
	5XF	classic grey	92-		
	B39	florentine grey	92		TURBO-LOOK
2	911 561 359 65	rear window		1	
3	911 561 053 65	rear window with cover		1	
	6HA	dark blue			
	7JW	blue/black			
	7MH	mahogany	90		
	3WW	mahogany	90		
	7MK	burgundy	90		
	9LW	burgundy	90		
	2XW	black			
	3ZL	cobalt blue	91-		
	5YH	magenta	91-		
	5XF	classic grey	92-		
	B39	florentine grey	92		TURBO-LOOK
4	911 561 405 02	zip		1	

Pos	Part Number	Name	Remarks	Qty	Model
	3AV	black			
5	911 561 523 02	loop		1	
	8YR	black			
6	999 591 836 17	push button		1	
7	999 591 838 17	cap		1	
8	000 043 022 00	zip repair kit		X	
	3AV	black			
10	911 561 244 01	roof frame seal		1	
11	911 561 153 65	restraining strap		2	
12	911 561 189 66	roof frame seal	/L	1	
	8VB	black outer			
(12)	911 561 190 66	roof frame seal	/R	1	
	8VB	black outer			
13	911 561 187 00	roof frame seal	/L	1	
(13)	911 561 188 00	roof frame seal inner	/R	1	
14	911 561 681 01	gasket	/L	1	
	8VB	black			
(14)	911 561 682 01	gasket	/R	1	
	8VB	black			
15	911 561 025 04	rail	/L	1	
	70B	black			
(15)	911 561 026 04	rail	/R	1	
	70B	black			
16	900 076 063 07	hexagon nut M 5		8	
17	900 151 038 07	washer A 5,3		8	
18	911 561 793 00	rail	/L	1	
(18)	911 561 794 00	rail	/R	1	
19	911 561 301 00	rain channel	/L	1	
	70K	black			
(19)	911 561 302 00	rain channel	/R	1	
	70K	black			
20	900 151 028 02	washer B 4,3		8	
21	N 013 957 5	tapping screw B 3,5 X 9,5		8	
22	999 190 162 37	blind rivet B 3,2 X 12,6		12	
23	911 561 239 00	tension rope	/L	1	
(23)	911 561 240 00	tension rope	/R	1	
24	911 561 403 01	tension spring		2	
25	911 561 407 00	support		2	
26	N 010 211 4	hexagon-head bolt M 6 X 12		2	
27	N 011 524 7	washer A 6,4		2	
28	900 075 100 02	hexagon-head bolt M 4 X 12		2	
29	900 910 006 02	lock nut M 4		4	
30	900 025 002 02	washer A 4,3		4	
31	900 144 028 07	tapping screw B 3,5 X 13		4	
32	999 591 102 17	washer $=3,5		2	
33	999 591 835 17	snap fastener lower part		2	
34	999 591 598 02	tenax lower part B 4,2 X 16		2	
(34)	999 591 597 02	tenax lower part B 4,2 X 10		6	
35	911 561 455 01	end piece	/L	1	

Pos	Part Number	Name	Remarks	Qty	Model
	70B	black			
(35)	911 561 456 01	end piece	/R	1	
	70B	black			
36	N 033 203 2	countersunk-head screw M 4 X 20		2	
37	911 561 059 66	lining		1	
	700	black main folding top bow			
38	911 561 597 00	rose	/L	1	
	70B	black			
38	911 561 598 66	rose	/R	1	
	70B	black			
39	900 145 096 07	tapping screw 4,2 X 16		12	
40	999 591 116 07	cone washer		12	
41	999 507 020 02	speed nut B 4,2		4	
42	911 561 050 00	roof lining		1	
	2FX	black			
43	911 565 093 66	padded cover		1	
	700	black			
44	911 561 781 65	rose for emergency control		2	
45	999 591 676 02	clamping washer $ = 7,0		4	
46	823 867 299	clip 7,9 X 0,88		6	
46	999 507 380 40	clip 8,0 X 0,88		2	
47	911 565 271 65	handle	/L	1	
	70B	black			
(47)	911 565 272 65	handle	/R	1	
	70B	black			

Pos	Part Number	Name	Remarks	Qty	Model
48	999 591 587 40	expansion rivet		2	
49	911 555 593 61	edge protection roof frame		1	
50	911 565 299 60	moltoprene shim		2	
51	911 565 297 60	cover roof frame		1	
52	911 561 295 03	cover		1	
	70B	black			
53	900 025 013 07	washer A 3,7		7	
54	900 143 133 07	tapping screw BZ 3,5 X 6,5		5	
55	900 143 124 07	tapping screw BZ 3,5 X 13		2	
		- -- E N D -- -			

Model	Year	MG	SG	Illustration	Restrictions	Update	18:11	24.11.2005	PORSCHE PET PORSCHE
964	94	8	11	811-16		194			

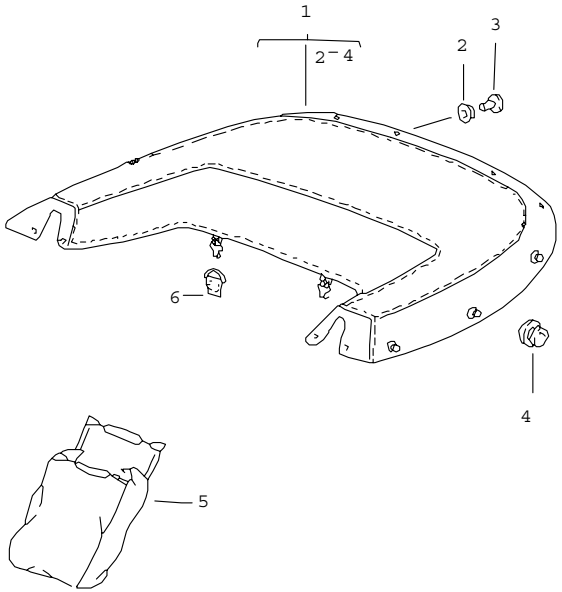

Pos	Part Number	Name	Remarks	Qty	Model
		convertible top cover			CABRIO
1	911 561 023 60	convertible top cover		1	
	6HA	dark blue			
	7JW	blue/black			
	7MH	mahogany	90		
	7MK	burgundy	90		
	9LW	burgundy			
	2XW	black			
	3ZL	cobalt blue	91-		
	5YH	magenta	91-		
	5XF	classic grey	92-		
	B39	florentine grey	92		TURBO-LOOK
2	999 591 836 17	push button		6	
3	999 591 838 17	cap		6	
4	999 591 983 12	tenax upper part		8	
5	911 561 087 00	bag		1	
6	911 561 493 00	leather loop		2	
		- -- E N D -- -			

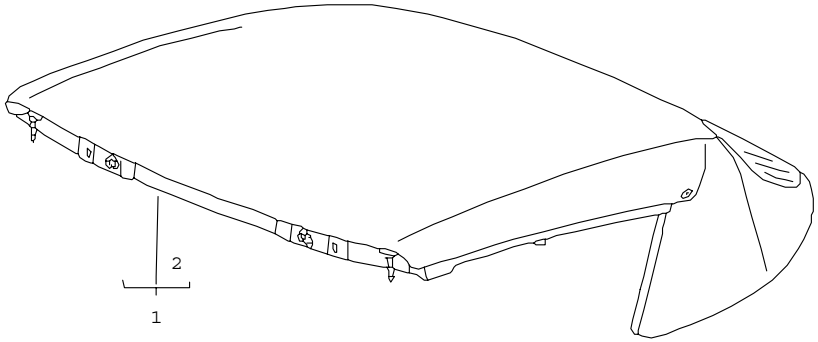

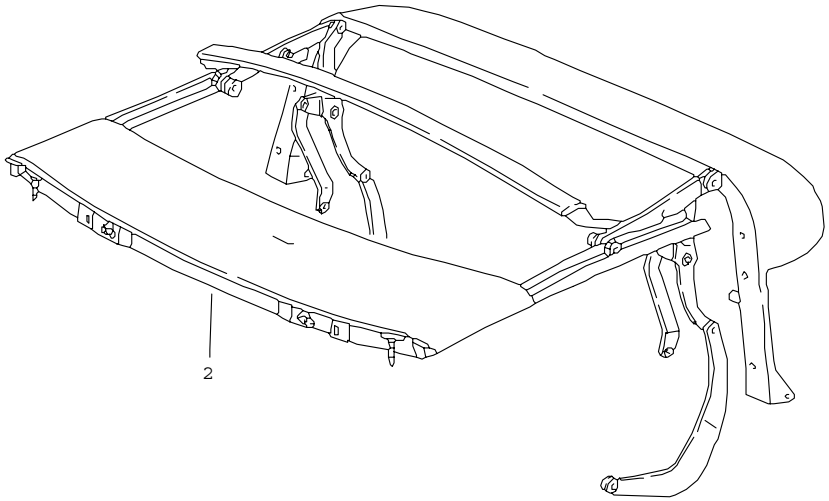

Pos	Part Number	Name	Remarks	Qty	Model
		convertible top convertible top frame			CABRIO
1	964 561 005 01	folding top complete		1	
	6HA	dark blue			
	7MH	mahogany	90		
	3WW	mahogany	90		
	7MK	burgundy	90		
	9LW	burgundy	90		
	2XW	black			
	3ZL	cobalt blue	91-		
	5YH	magenta	91-		
	5XF	classic grey	92-		
	B39	florentine grey	92		
2	964 561 011 01	convertible top frame		1	
	70B	black complete			
		- -- E N D -- -			

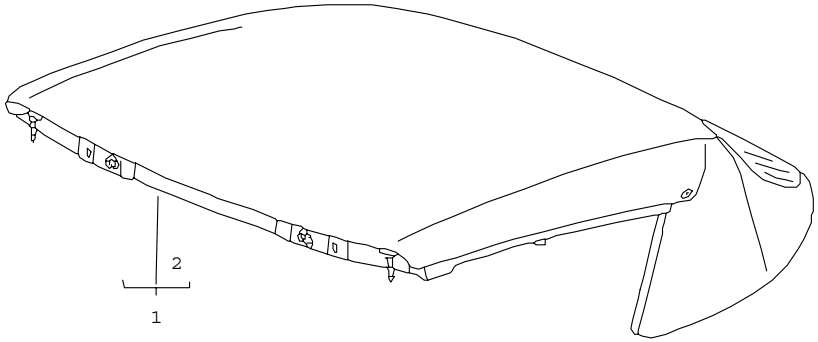

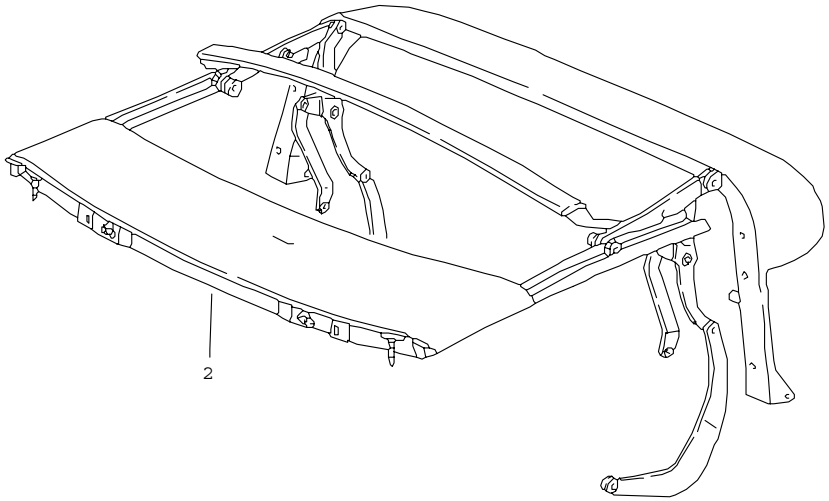

Pos	Part Number	Name	Remarks	Qty	Model
		convertible top convertible top frame			CABRIO
1	964 561 005 01	folding top complete		1	
	6HA	dark blue			
	7MH	mahogany	90		
	3WW	mahogany	90		
	7MK	burgundy	90		
	9LW	burgundy	90		
	2XW	black			
	3ZL	cobalt blue	91-		
	5YH	magenta	91-		
	5XF	classic grey	92-		
	B39	florentine grey	92		
2	964 561 011 01	convertible top frame		1	
	70B	black complete			
		- -- E N D -- -			

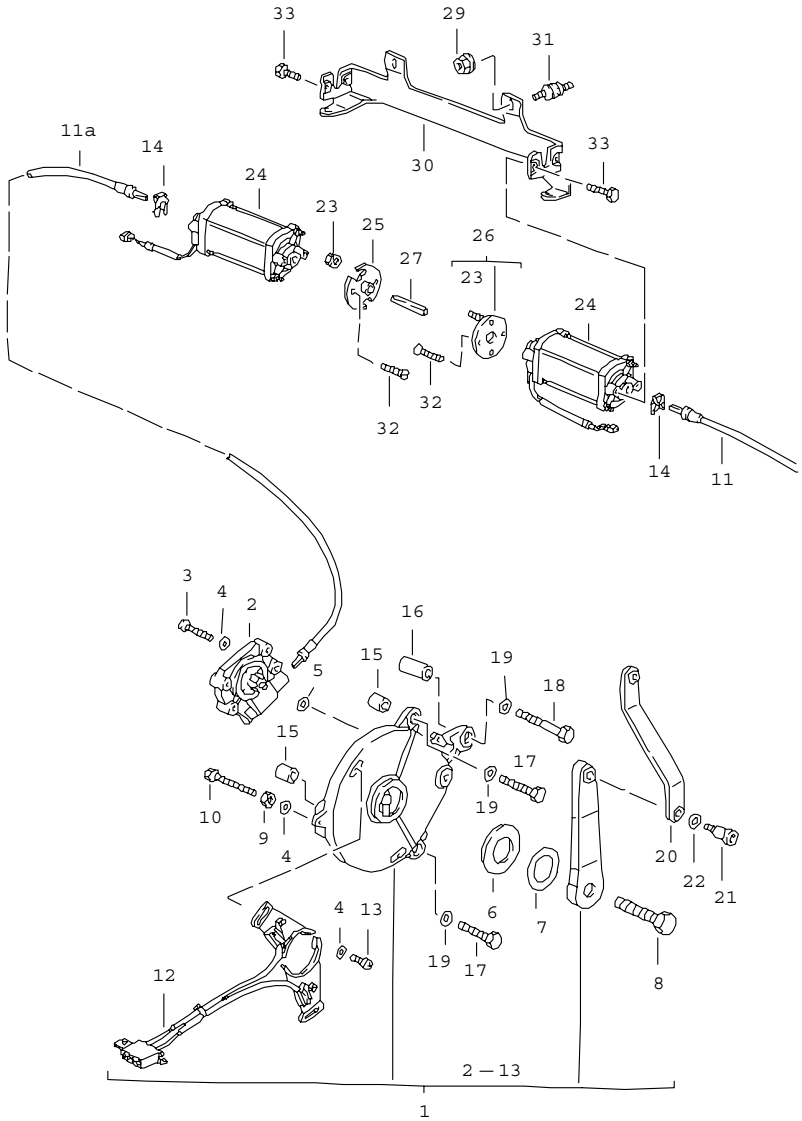

Pos	Part Number	Name	Remarks	Qty	Model
		convertible top driving mechanism			CABRIO
(1)	911 561 045 67	transmission	/L	1	
	70B	black			
1	911 561 046 67	transmission	/R	1	
	70B	black			
(2)	911 561 103 65	planetary transmission	/L	1	
2	911 561 104 65	planetary transmission	/R	1	
3	900 146 025 02	screw M 4 X 18		4	
4	900 025 002 02	washer A 4,3		6	
5	900 234 003 02	shim 8 X 14 X 1,0		2	
6	999 025 254 10	washer 30 X 50 X 1,5		2	
7	900 234 143 02	shim 30 X 42 X 0,1		X	
8	999 217 095 02	hexagon-head bolt micro-self-locking M 12 X 30		2	
9	N 011 004 6	hexagon nut M 4		2	
10	N 040 257 1	hexagon-head bolt M 4 X 22		2	
11	993 561 921 03	shaft	/L	1	
11A	993 561 922 03	shaft	/R	1	
12	911 613 037 00	microswitch with plate		1	
13	N 014 122 8	oval-head screw M 4 X 8		2	
14	911 561 643 65	spring clamp		2	
15	W 911 561 746 65	spacer sleeve		4	
15	999 209 038 30	spacer sleeve 8,0 X 6,0 X 15		4	

Pos	Part Number	Name	Remarks	Qty	Model
16	W 911 561 745 65	spacer sleeve		2	
16	999 209 039 30	spacer sleeve 8,0 X 6,0 X 30		2	
17	W N 010 347 5	hexagon-head bolt		4	
17	900 378 067 02	hexagon-head bolt M 6 X 35		4	
18	W N 040 303 1	hexagon-head bolt		2	
18	900 378 032 02	hexagon-head bolt M 6 X 50		2	
19	W N 015 404 1	washer A 6,4		6	
19	900 223 001 02	washer 8,4		6	
20	911 561 169 65	push rod	/L	1	
	70B	black			
(20)	911 561 170 65	push rod	/R	1	
	70B	black			
21	911 561 418 00	screw M 8 X 20		2	
22	911 561 428 00	washer 10,5		2	
23	999 084 078 02	hexagon nut M 5		2	
24	911 624 117 00	electric motor		2	
25	911 624 269 01	washer $=50		1	
26	911 624 171 01	washer		1	
27	911 624 273 00	connecting piece		1	
28	900 025 003 02	washer A 5,3		4	
29	900 377 009 02	hexagon nut M 5		4	
30	964 624 185 65	clip		1	
31	999 703 308 00	bonded rubber mounting 15 X 8 / M5		4	
32	999 919 045 02	locking screw M 5 X 16		4	
33	999 919 046 02	locking screw M 5 X 16		4	

- -- E N D -- -

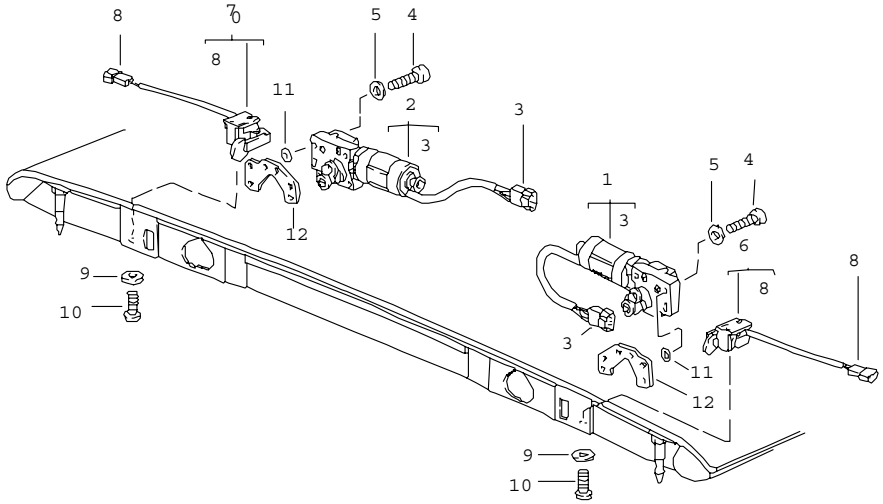

Pos	Part Number	Name	Remarks	Qty	Model
		convertible top catch			CABRIO
1	911 624 055 03	electric motor	/L	1	
2	911 624 056 03	electric motor	/R	1	
3	171 971 998 C	connector housing		2	
4	N 014 743 2	pan-head screw M 6 X 30		8	
5	N 011 524 7	washer A 6,4		8	
6	911 613 015 00	microswitch	/L	1	
7	911 613 016 00	microswitch	/R	1	
8	171 971 998 A	connector housing		2	
9	900 151 028 02	washer B 4,3		4	
10	900 146 011 02	oval-head screw M 4 X 10		4	
11	N 027 401 1	shim 6 X 12 X 1,0		8	
12	911 561 547 01	threaded plate		2	
		- -- E N D -- -			

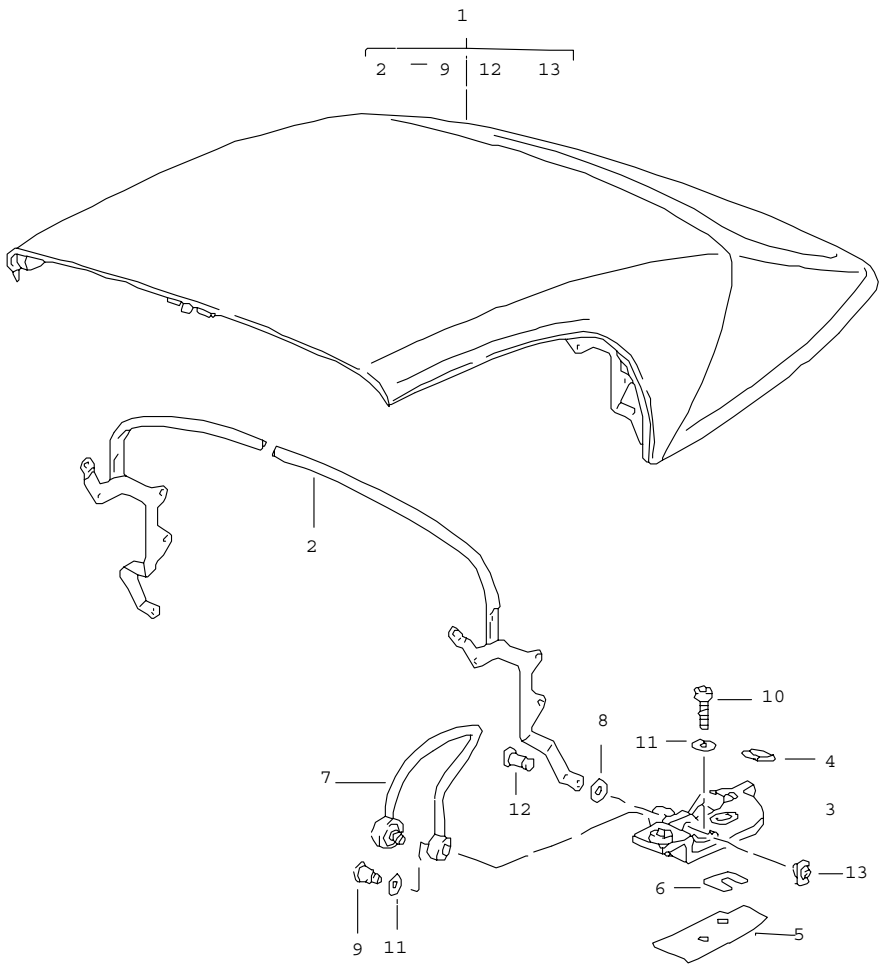

Pos	Part Number	Name	Remarks	Qty	Model
		folding top complete main folding top bow single parts			SPEEDSTER
1	964 563 005 00	folding top ready for installation		1	
	2XW	black			
2	964 563 071 00	main folding top bow		1	
3	964 563 743 01	bearing	/L	1	
(3)	964 563 744 01	bearing	/R	1	
4	964 563 747 00	rubber buffer		2	
5	964 563 453 00	desk pad		4	
(5)	964 563 453 01	desk pad		2	
6	964 563 463 01	desk pad		4	
(6)	964 563 463 01	desk pad		2	
7	964 563 059 00	clip	/L	1	
(7)	964 563 060 00	clip	/R	1	
8	911 561 428 00	washer		4	
9	911 561 421 00	screw		2	
10	900 067 353 09	pan-head screw M 8 X 25		6	
11	900 025 048 07	washer A 8,4 X 17 X 1,6		6	
12	999 088 017 02	bolt 11 X 19,5		2	
13	999 166 044 01	sl-lock 8		2	
		- -- E N D -- -			

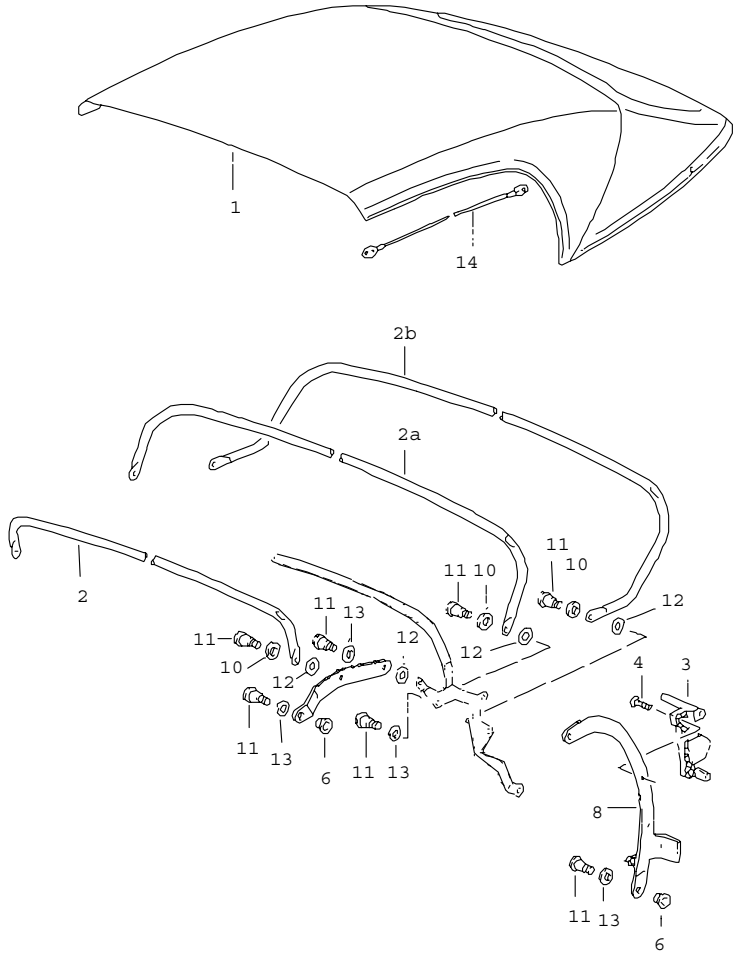

Pos	Part Number	Name	Remarks	Qty	Model
		convertible top covering convertible top frame single parts			SPEEDSTER
1	964 563 049 00	convertible top covering with rear window		1	
	2XW	black			
2	964 563 181 00	bow		1	
	70K	black			
2A	964 563 115 00	bow		1	
	70K	black			
2B	964 563 333 00	bow		1	
	70K	black			
3	964 563 421 00	stop	/L	1	
(3)	964 563 422 00	stop	/R	1	
4	900 249 001 07	countersunk-head screw M 6 X 15		1	
5	964 563 179 00	lever	/L	1	
(5)	964 563 180 00	lever	/R	1	
6	999 209 027 40	bush 10 X 11,5 X 7		4	
8	964 563 173 00	lever	/H/L	1	
(8)	964 563 174 00	lever	/H/R	1	
10	999 025 210 40	washer 10,5 X 18 X 4		6	
11	999 218 052 07	screw micro-self-locking M 8 X 9,2		12	
12	900 222 009 07	cup spring		10	
13	999 025 217 40	washer 10,5 X 18 X 2		6	
14	964 563 405 00	tension rope		2	
		- -- E N D -- -			

Model	Year	MG	SG	Illustration	Restrictions	Update	18:12	24.11.2005	PORSCHE PET PORSCHE
964	94	8	11	811-32		194			

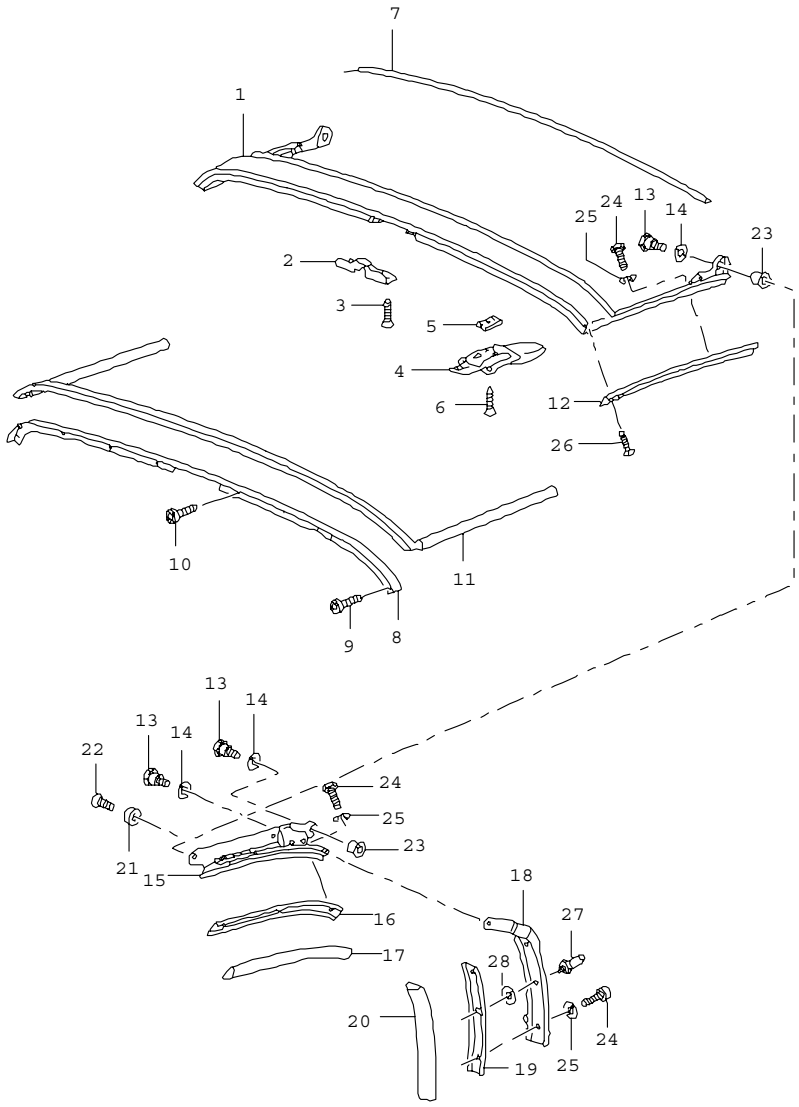

Pos	Part Number	Name	Remarks	Qty	Model
		folding top seal roof frame			SPEEDSTER
1	964 563 027 01	roof frame		1	
2	911 563 633 00	handle		1	
	01C	black			
3	900 270 063 07	countersunk-head screw M 5 X 10		2	
4	964 563 081 00	catch		2	
5	999 507 023 02	speed nut B 4,8		6	
6	N 014 098 6	tapping screw B 4,8 X 16		6	
7	911 555 593 61	edge protection 1155 MM		1	
8	964 563 735 00	rail		1	
9	900 144 028 07	tapping screw B 3,5 X 13		2	
10	999 073 040 00	tapping screw B 4,2 X 9,5		6	
11	964 563 325 00	gasket		1	
12	964 563 511 01	retaining strip	/V/L	1	
(12)	964 563 518 01	retaining strip	/H/R	1	
13	999 218 052 07	screw micro-self-locking M 8 X 9,2		6	
14	999 025 217 40	washer 10,5 X 18 X 2		10	
15	964 563 089 00	roof frame	/L	1	
(15)	964 563 090 00	roof frame centre	/R	1	
16	964 563 515 01	retaining strip	/L	1	
(16)	964 563 516 01	retaining strip centre	/R	1	
17	964 563 335 00	gasket	/L	1	

Pos	Part Number	Name	Remarks	Qty	Model
(17)	964 563 336 00	gasket centre	/R	1	
18	964 563 051 00	roof frame	/H/L	1	
(18)	964 563 052 00	roof frame	/H/R	1	
19	964 563 517 01	retaining strip	/H/L	1	
(19)	964 563 518 01	retaining strip	/H/R	1	
20	964 563 345 00	gasket	/H/L	1	
(20)	964 563 346 00	gasket	/H/R	1	
21	964 563 402 00	eccentric washer		2	
22	N 033 185 1	countersunk-head screw M 4 X 16		2	
23	999 209 027 40	bush 10 X 11,5 X 7		4	
24	900 067 344 07	pan-head screw M 4 X 8		18	
25	900 151 027 07	washer B 5,3		18	
26	999 025 246 40	washer		2	
27	964 563 855 00	locating peg		2	
		- -- E N D -- -			

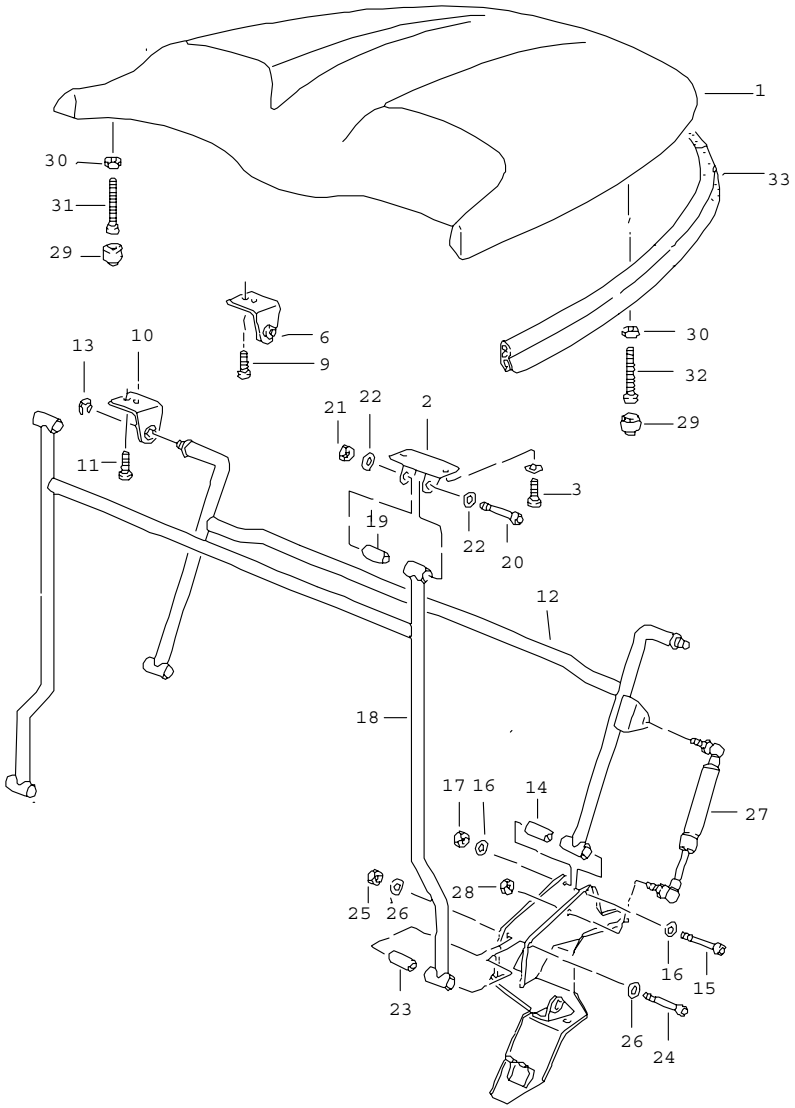

Pos	Part Number	Name	Remarks	Qty	Model
		rear covering			SPEEDSTER
1	964 504 111 00	rear covering		1	
	G2X	prime coated			
2	964 504 361 00	bearing bracket centre		1	
3	900 067 226 07	pan-head screw M 6 X 20		4	
3A	900 223 013 07	washer 6,4		4	
6	964 504 663 00	support		2	
9	900 067 226 07	pan-head screw M 6 X 20		4	
10	964 504 667 00	bracket		2	
11	900 067 226 07	pan-head screw M 6 X 20		4	
12	964 504 441 00	cross tube		1	
13	N 012 439 2	lock washer 8		2	
14	964 504 890 00	bush		4	
15	900 067 307 07	pan-head screw M 6 X 45		2	
16	900 025 047 07	washer A 6,4 X 12,5		4	
17	900 076 010 07	hexagon nut M 6		2	
18	964 504 433 00	control arm		1	
19	964 504 890 00	bush		4	
20	900 067 307 07	pan-head screw M 6 X 45		2	
21	900 076 010 07	hexagon nut M 6		2	
22	900 025 047 07	washer A 6,4 X 12,5		2	
23	964 504 890 00	bush		4	
24	900 067 307 07	pan-head screw M 6 X 45		2	

Pos	Part Number	Name	Remarks	Qty	Model	Pos	Part Number	Name	Remarks	Qty	Model
25	900 076 010 07	hexagon nut M 6		2							
26	900 025 047 07	washer A 6,4 X 12,5		4							
27	911 504 231 00	gas-filled strut		1							
28	900 076 062 07	hexagon nut M 8		1							
29	W 911 504 733 00	cap		2							
	70B	black									
29	999 703 405 40	stop 20,6 X 12,7		4							
30	900 076 010 07	hexagon nut M 6		4							
31	W N 044 703 3	pan-head screw M 6 X 45		2							
31	900 402 011 07	threaded bolt M 6 X 50		2							
32	W 900 067 013 02	pan-head screw M 6 X 32		2							
32	900 402 012 07	threaded bolt M 6 X 40		2							
33	964 504 333 00	gasket		1							
		- -- E N D -- -									

Model	Year	MG	SG	Illustration	Restrictions	Update	18:13	24.11.2005	PORSCHE PET PORSCHE
964	94	8	11	811-36		194			

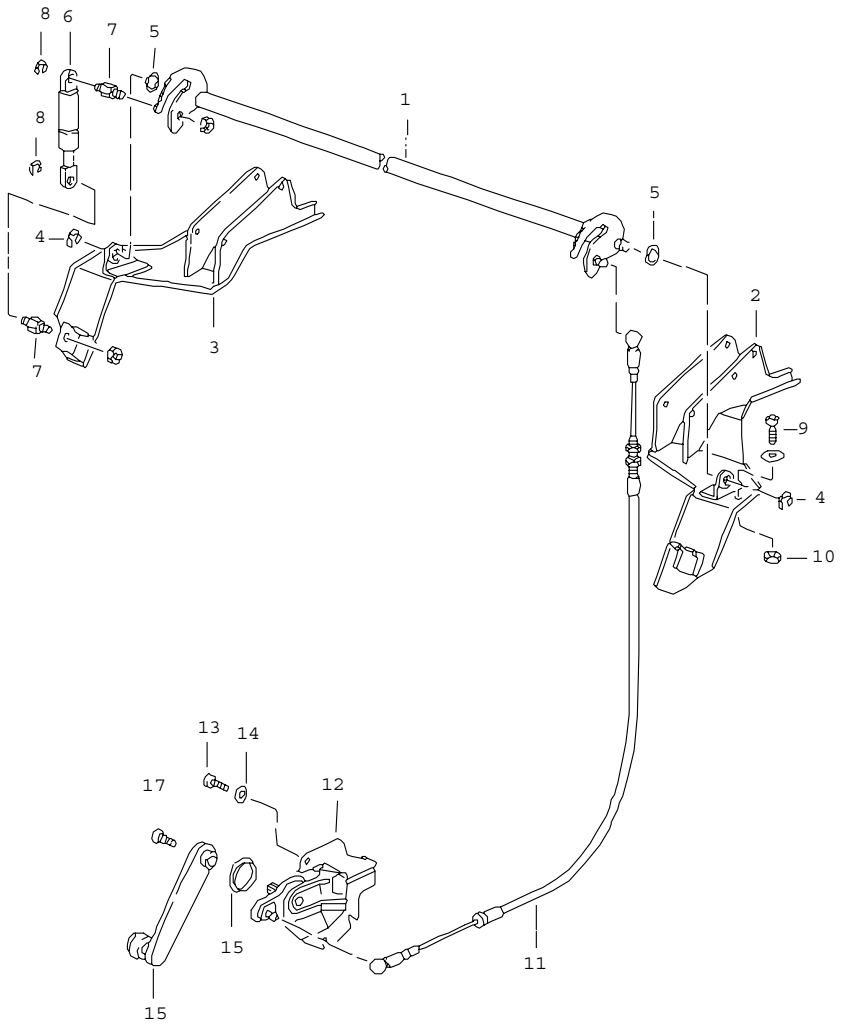

Pos	Part Number	Name	Remarks	Qty	Model
		rear covering control shaft single parts			SPEEDSTER
1	964 504 279 00	control shaft		1	
2	964 504 373 00	plate	/L	1	
3	964 504 374 00	plate	/R	1	
4	900 116 015 09	lock washer 10		2	
5	964 504 879 00	washer		2	
6	964 504 585 00	gas-filled strut		1	
7	964 504 795 00	screw bolt		2	
7A	900 910 047 09	lock nut M 6		1	
8	900 116 004 09	lock washer 5		2	
9	900 067 226 07	pan-head screw M 6 X 20		2	
9A	900 223 013 07	washer 6,4		2	
10	900 076 010 07	hexagon nut M 6		4	
11	964 504 365 00	bowden cable		1	
11A	900 169 014 02	securing clip 8		1	
12	964 504 321 00	support		1	
13	900 067 185 07	pan-head screw M 6 X 12		3	
14	900 025 047 07	washer A 6,4 X 12,5		3	
15	964 504 557 00	crank		1	
	01C	satin black			
16	W 111 837 595	desk pad		1	
(17)	W 900 269 017 02	countersunk-head screw		1	
17	900 146 139 07	round head screw micro-self-locking M 5 X 12		1	

Pos	Part Number	Name	Remarks	Qty	Model	Pos	Part Number	Name	Remarks	Qty	Model
		- -- E N D -- -									

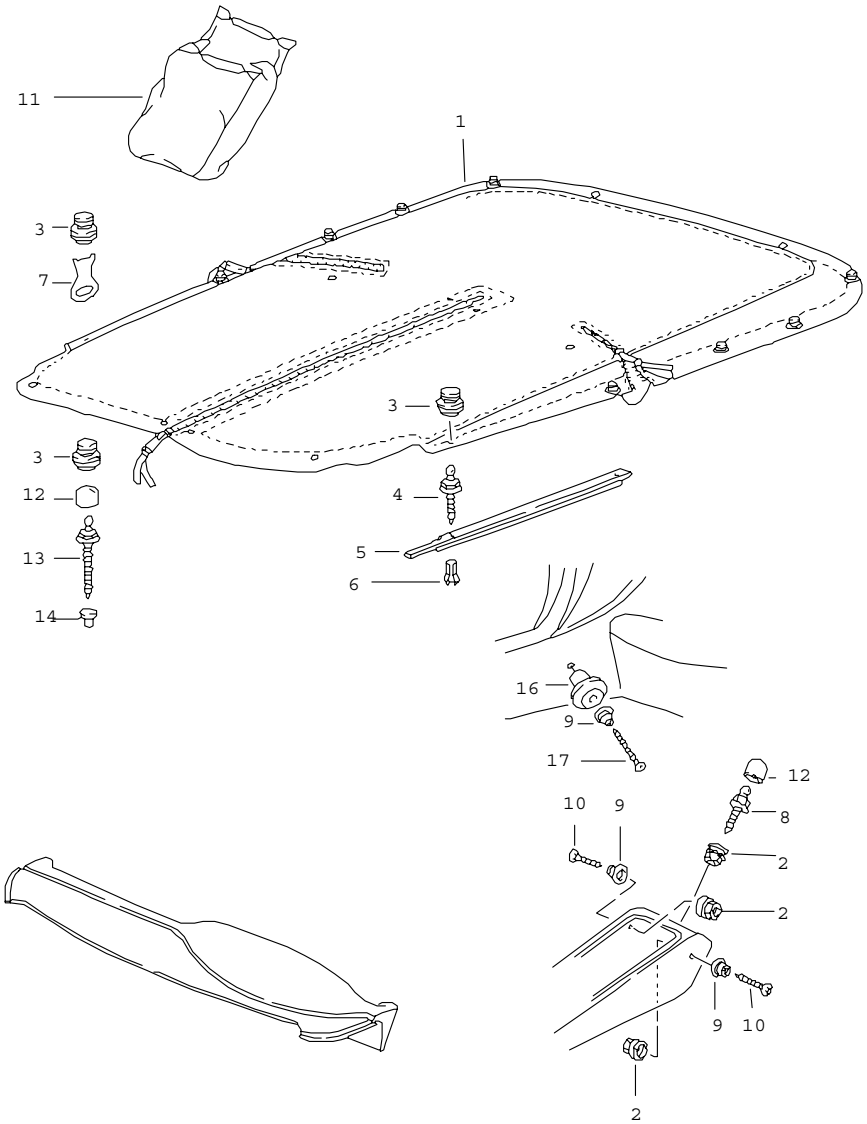

Pos	Part Number	Name	Remarks	Qty	Model
		tonneau cover			CABRIO
		for subsequent installat. see technical information GR.X NR.3/84			
1	964 561 411 00	tonneau cover	/LL	1	
	3AV	black			
	7MH	mahogany	90		
	6HA	dark blue			
	7MK	burgundy	90		
	2XW	black			
	3ZL	cobalt blue	91-		
	5YH	magenta	91-		
	5XF	classic grey	92-		
	B39	florentine grey	92		
(1)	964 561 411 01	tonneau cover	/RL	1	
	3AV	black			
	7MH	mahogany	90		
	6HA	dark blue			
	7MK	burgundy	90		
	2XW	black			
	3ZL	cobalt blue	91-		
	5YH	magenta	91-		
	5XF	classic grey	92-		
	B39	florentine grey	92		
2	999 591 716 02	tapping nut 3,0		3	
3	999 591 983 12	tenax upper part		8	
4	999 591 598 02	tenax lower part		4	
5	911 531 041 60	moulding	/L	1	
	70K	black			
(5)	911 531 042 60	moulding	/R	1	

Pos	Part Number	Name	Remarks	Qty	Model
	70K	black			
6	999 591 708 02	prestole cage		4	
7	000 043 032 00	key		X	
8	999 591 597 02	tenax lower part		1	
9	999 591 834 17	snap fastener lower part		4	
10	900 144 031 07	counters. head tapp. screw 3,5 X 16		2	
11	911 561 087 00	bag		1	
12	911 561 529 00	cap		4	
13	999 591 608 17	tenax lower part B 4,2 X 22		3	
14	999 703 182 40	plug $=4		3	
16	964 561 731 00	spacer sleeve		2	
	01C	satin black			
17	900 145 082 07	tapping screw B 3,5 X 38		2	
		- -- E N D -- -			

Pos	Part Number	Name	Remarks	Qty	Model

Model	Year	MG	SG	Illustration	Restrictions	Update	18:13	24.11.2005	PORSCHE PET PORSCHE
964	94	8	12	812-00		194			

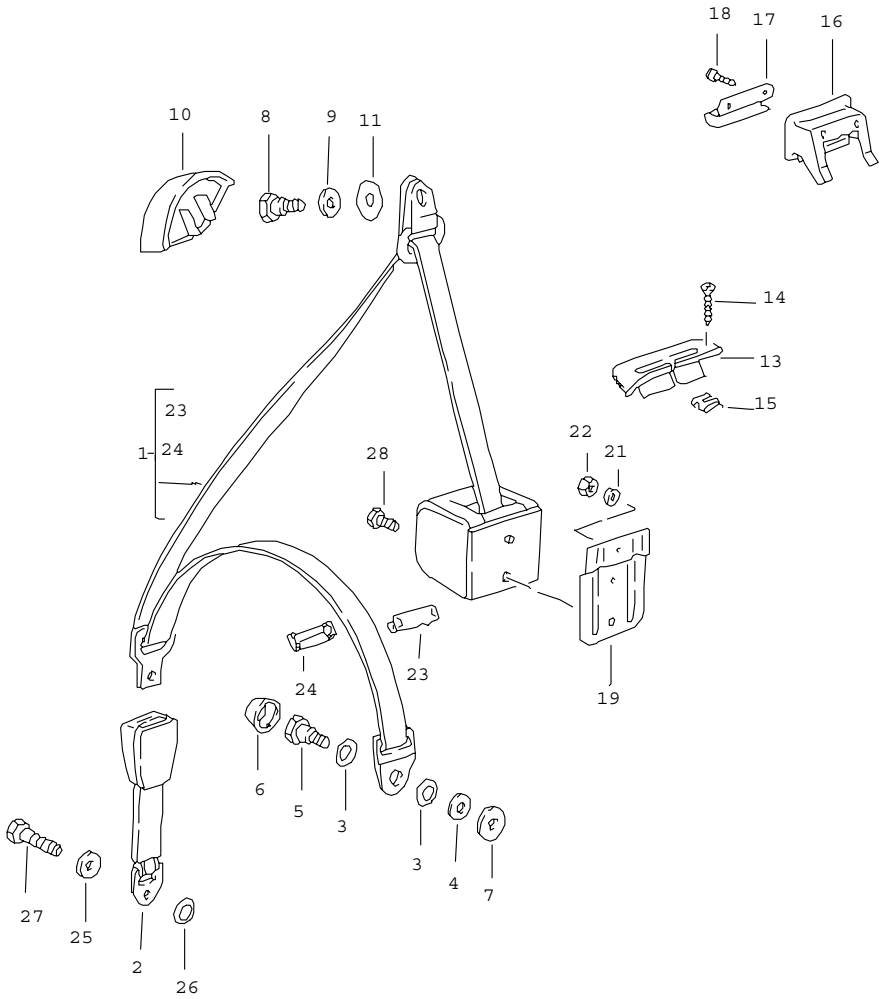

Pos	Part Number	Name	Remarks	Qty	Model
		seat belt front	TURBO		CARRERA 2/4/ TURBO-LOOK
1	928 803 126 10	seat belt	89	2	
	70B	black automatic			
1	A 964 803 125 02	seat belt	90-91	2	
	70B	black automatic			
1	A 964 803 033 00	seat belt	90 -91	2	
	70B	black automatic			
1	964 803 033 03	seat belt	90-	2	
	70B	black automatic			
2	964 803 183 00	seat-belt buckle		1	
	70B	black passenger's side			
(2)	964 803 183 01	seat-belt buckle		1	
	70B	black driver's side			
3	211 857 771	washer	89	4	
3	211 857 771	washer	90-	4	
(4)	810 019 829	guide sleeve	89	2	
4	999 924 063 02	spacer sleeve 12 X 18 X 5	90-	2	
5	111 857 793 E	fastening screw		2	
6	811 857 845	cap	89	2	
6	811 857 845	cap	90-	2	
7	111 857 707 A	spacer	90-	2	
8	111 857 793 E	fastening screw		2	COUPE
8	803 019 811 B	screw		2	TARGA
8	914 803 468 10	screw		2	CABRIO
9	999 025 113 02	washer 11,5 X 21 X 2		2	COUPE

Pos	Part Number	Name	Remarks	Qty	Model
(9)	477 857 643	spacer sleeve		2	TARGA
10	944 803 141 00	cover		2	
	70B	black			
13	911 555 615 01	rose	89	2	
13	911 803 615 00	rose	/L 90-	1	COUPE
	01C	black			
(13)	911 803 616 00	rose	/R 90-	1	COUPE
	01C	black			
14	N 014 093 3	tapping screw B 4,2 X 13		4	COUPE
15	999 507 020 02	speed nut 4,2		4	COUPE
16	901 803 139 00	rose		2	TARGA
	01C	black			
17	911 555 619 40	relay lever		2	TARGA
18	900 145 071 07	tapping screw B 3,5 X 13		4	TARGA
19	911 555 625 00	support for seatbelt	89	2	
21	900 031 011 02	washer 6,4		2	
22	900 076 010 02	hexagon nut M 6		2	
23	928 803 151 02	clip upper part	-91	2	
24	928 803 153 02	clip lower part	-91	2	
25	N 011 655 2	washer		2	
26	999 028 014 02	spring washer		2	
27	959 803 701 00	hexagon-head bolt		2	
28	911 803 150 00	fastening screw		2	
		- -- E N D -- -			

Pos	Part Number	Name	Remarks	Qty	Model

Model	Year	MG	SG	Illustration	Restrictions	Update	18:14	24.11.2005	PORSCHE PET PORSCHE
964	94	8	12	812-01		194			

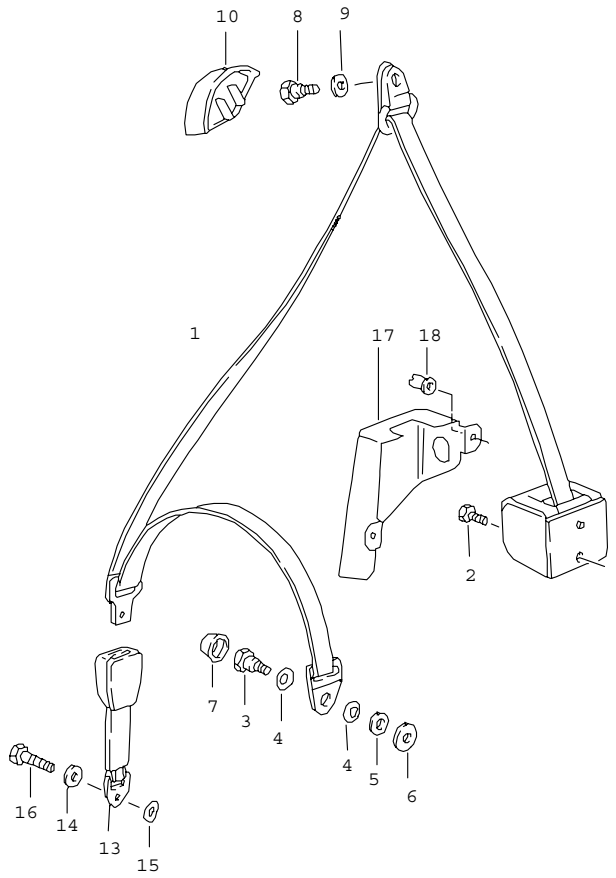

Pos	Part Number	Name	Remarks	Qty	Model
		seat belt seat belt front			CARRERA RS SPEEDSTER
1	964 803 033 04	seat belt automatic		2	
	H03	maritime blue			
	G33	rubystone red			
	N13	guards red			
	V02	speed yellow	93		
1	964 803 033 03	seat belt		2	
	70B	black			
1	964 803 033 05	seat belt automatic		2	M 562
	70B	black			
1	964 803 033 06	seat belt automatic		2	M 562
	H03	maritime blue			
	N13	guards red			
	V02	speed yellow			
2	911 803 150 00	screw		2	
3	111 857 793 E	fastening screw		2	
4	211 857 771	washer		4	
5	999 924 063 02	spacer sleeve		2	
6	111 857 707 A	spacer		2	
7	811 857 845	cap		2	
8	111 857 793 E	fastening screw		2	
8	914 803 468 10	fastening screw		2	SPEEDSTER
9	999 025 113 02	washer		2	
10	944 803 141 00	cover		2	
	70B	black			

Pos	Part Number	Name	Remarks	Qty	Model	Pos	Part Number	Name	Remarks	Qty	Model
3-16	-	see group 8/06/76 - 8/06/77 catalogue STZ 18									
17	964 555 327 00	cover carpet	/L	1	CARRERA RS						
	5FV	black									
(17)	964 555 328 00	cover carpet	/R	1	CARRERA RS						
	5FV	black									
18	999 049 001 40	plastic nut		4	CARRERA RS						
		- -- E N D -- -									

Model	Year	MG	SG	Illustration	Restrictions	Update	18:14	24.11.2005	PORSCHE	PET	PORSCHE
964	94	8	12	812-05		194					

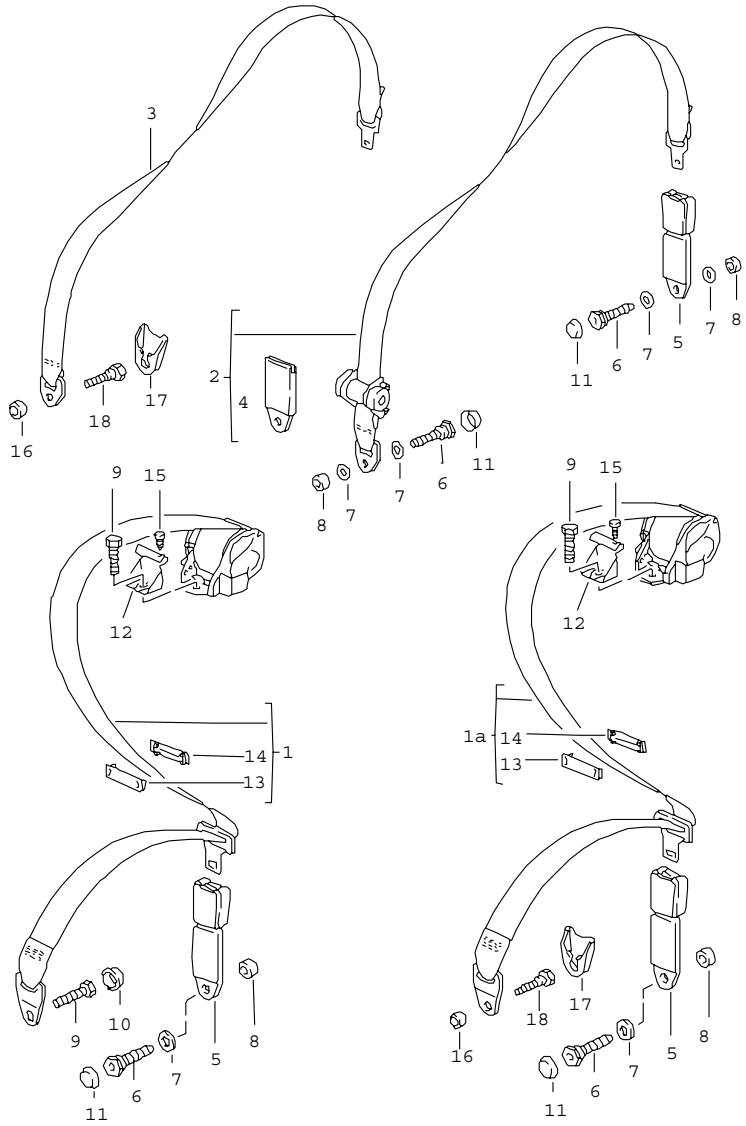

Pos	Part Number	Name	Remarks	Qty	Model
		seat belt rear			
1	911 803 049 07	seat belt F >>96LS4 00425 F >>96LS4 10069		2	M 335 COUPE TARGA
	70B	black automatic			
1A	A 964 803 021 00	seat belt F 96LS4 00426>> F 96LS4 10070>>		2	COUPE/TARGA COUPE TARGA
	70B	black automatic			
(1A)	A 964 803 021 01	seat belt F 96LS4 00426>> F 96LS4 10070>>		2	 COUPE TARGA
	70B	black automatic			
(1A)	964 803 021 02	seat belt F 96LS4 00426>> F 96LS4 10070>>		2	 COUPE TARGA
	70B	black automatic			
2	477 857 787 C	seat belt	89	2	M 185,M 215
2	477 857 787 C	seat belt automatic	90-	2	CABRIO M 215
3	477 857 795	lap belt F >>96LS4 00425 F >>96LS4 10069		2	M 186 COUPE TARGA
3	964 803 015 00	lap belt F 96LS4 00426>> F 96LS4 10070>>		2	CABRIO:M 186 COUPE TARGA
	70B	black manual			
4	477 857 750 B	cap	89	2	M 185
4	477 857 750 B	cap	90-	2	CABRIO
5	477 857 739 A	seat-belt buckle		2	
6	911 803 451 00	fastening screw		2	
7	211 857 771	washer		2	
8	901 803 116 40	spacer sleeve		2	

Pos	Part Number	Name	Remarks	Qty	Model
9	111 857 799 A	fastening screw	89	4	M 335
9	111 857 799 A	fastening screw	90-	2	COUPE/TARGA
9	111 857 799	fastening screw	93-	2	COUPE/TARGA
-	999 025 113 02	washer 11,5 X 21 X 2	93-	2	COUPE/TARGA
10	811 857 845	cap F >>96LS4 00425 F >>96LS4 10069		2	M 335 COUPE TARGA
11	911 803 259 01	cap		2	
	70B	black			
12	911 803 479 00	relay lever	89	2	M 335
12	911 803 479 00	relay lever	90-	2	COUPE/TARGA
13	928 803 151 02	clip	89	2	M 335
13	928 803 151 02	clip upper part	90-	2	COUPE/TARGA
14	928 803 153 02	clip	89	2	M 335
14	928 803 153 02	clip lower part	90-	2	COUPE/TARGA
15	477 885 699 C	plug		2	COUPE/TARGA
16	999 924 064 02	bush 12 X 18 X 14 F 96LS4 00426>> F 96LS4 10070>>		2	COUPE/TARGA CABRIO:M 186 COUPE TARGA
17	964 803 141 00	cap F 96LS4 00426>> F 96LS4 10070>>		2	COUPE/TARGA CABRIO:M 186 COUPE TARGA
18	803 019 811 B	screw F 96LS4 00426>> F 96LS4 10070>>		2	COUPE/TARGA CABRIO:M 186 COUPE TARGA
		- -- E N D -- -			

Pos	Part Number	Name	Remarks	Qty	Model

Model	Year	MG	SG	Illustration	Restrictions	Update	18:14	24.11.2005	PORSCHE PET PORSCHE
964	94	8	13	813-00		194			

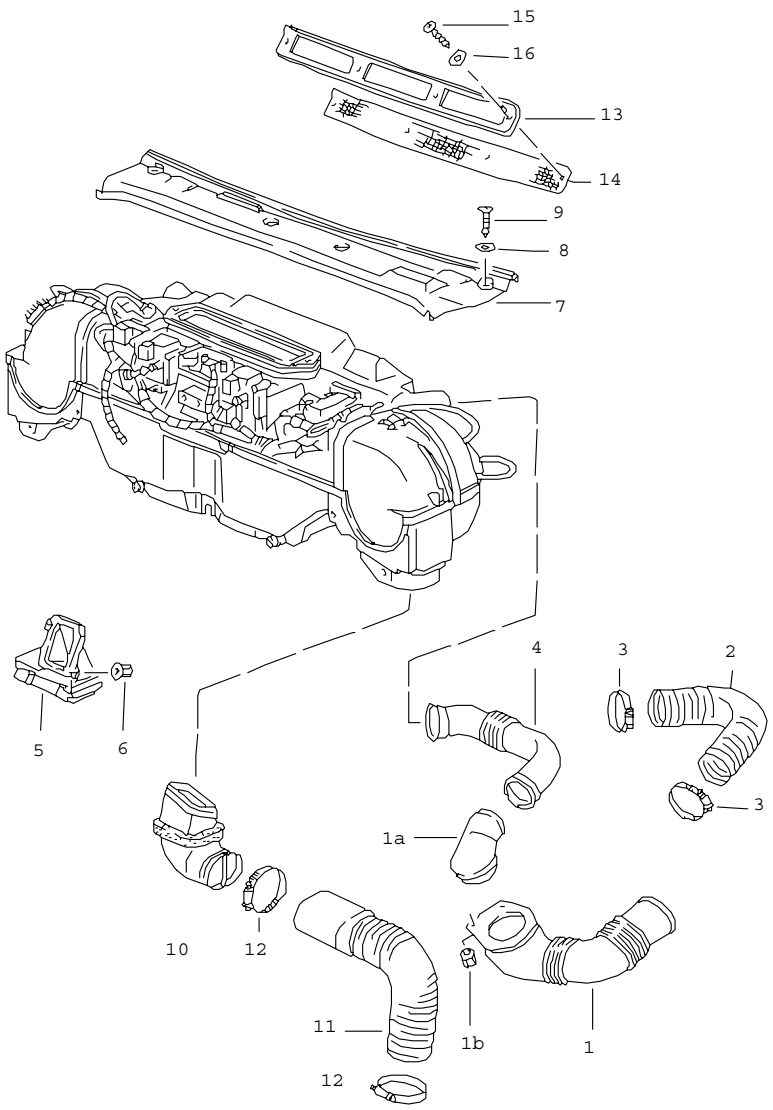

Pos	Part Number	Name	Remarks	Qty	Model
		ventilation heating system 1			
(1)	A 964 572 251 00	air duct	/L 89	1	
(1)	A 964 572 252 00	air duct	/R 89	1	
1	964 572 251 01	air duct	/L	1	
(1)	964 572 252 01	air duct side vent	/R	1	
1A	964 572 241 00	air duct cross panel		2	
1B	W 999 049 009 40	plastic nut		1	
1B	999 591 839 40	plastic nut T 5		1	
2	911 573 115 00	hose LW 61 X 420	/RL	2	
3	999 512 349 02	hose clamp 50-70/9	/RL	4	
4	993 572 419 00	air duct	/LL/L	1	
(4)	964 572 430 00	air duct heater	/LL/R	1	
(5)	964 572 083 00	footwell outlet vent	/L	1	
5	964 572 084 01	footwell outlet vent	/R	1	
6	999 591 839 40	hexagon nut T 5		4	
7	993 572 403 00	cover		1	
8	999 025 188 07	washer 5,3 X 17 X 1	89	2	
(8)	911 511 332 00	spacer	90-	2	
9	900 143 124 07	tapping screw BZ 3,5 X 13	89	2	
(9)	900 143 047 07	tapping screw B 4,2 X 19	90-	2	
10	964 572 045 00	connection piece	/L	1	
(10)	964 572 046 00	connection piece upper	/R	1	
11	964 572 527 01	air hose	/L	1	

Pos	Part Number	Name	Remarks	Qty	Model
(11)	964 572 528 01	air hose	/R	1	
12	999 512 351 02	hose clamp 70 - 90/9		8	
13	911 559 401 00	grille frame		1	
	70K	black			
14	911 559 410 00	grille		1	
15	N 014 086 12	tapping screw B 3,5 X 13		4	
16	901 559 491 20	spacer		2	
		- -- E N D -- -			

Pos	Part Number	Name	Remarks	Qty	Model

Model	Year	MG	SG	Illustration	Restrictions	Update	18:14	24.11.2005	PORSCHE PET PORSCHE
964	94	8	13	813-01		194			

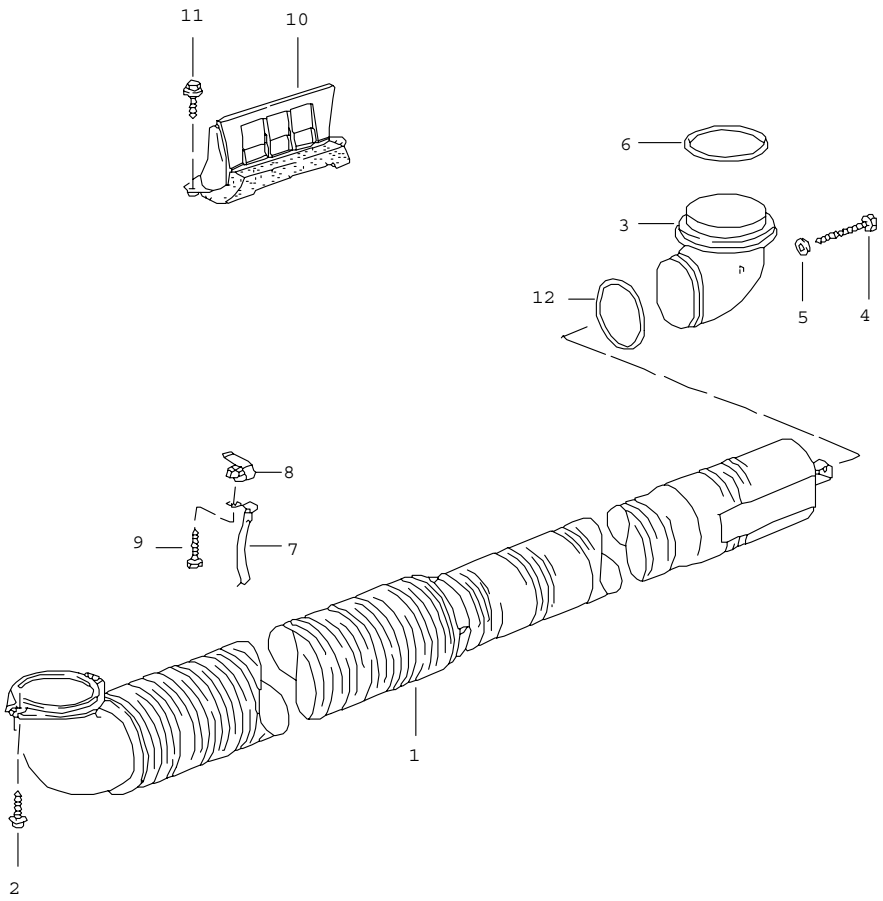

Pos	Part Number	Name	Remarks	Qty	Model
		ventilation heating system 2			
1	964 572 041 01	muffler	TURBO 002	2	CARRERA 2/4/ TURBO-LOOK CARRERA RS:M
(1)	964 572 041 02	muffler		2	CARRERA RS
2	900 143 102 02	screw B 4,2 X 19		4	
3	964 572 185 00	elbow		2	
4	900 187 033 02	tapping screw B 4,8 X 50		2	
5	900 025 003 02	washer A 5,3		2	
6	999 707 207 40	o-ring	-91	2	
6	999 707 207 40	o-ring 75 X 5,3	92-	2	
7	964 572 438 01	clip	TURBO 002	4	CARRERA 2/4/ TURBO-LOOK CARRERA RS M
(7)	964 572 438 02	clip		4	CARRERA RS
8	999 591 614 02	prestole cage B 4,2		4	
9	900 143 007 02	tapping screw B 4,2 X 13		4	
10	964 572 043 01	insert bleeding		2	
11	900 187 125 02	screw B 3,5 X 13		4	
12	999 707 126 40	o-ring 66 X 3,0		2	
		- -- E N D -- -			

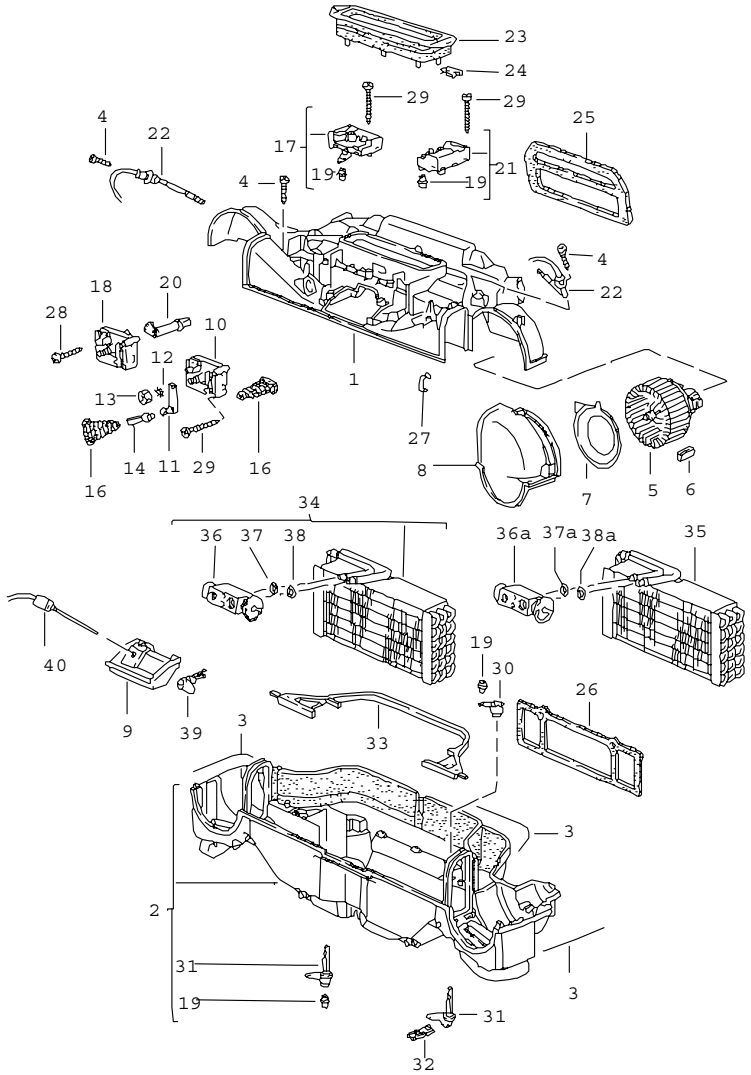

Pos	Part Number	Name	Remarks	Qty	Model
		heater air conditioner single parts			
1	964 572 901 00	housing upper part ready for installation		1	
2	964 572 902 00	housing lower part		1	
3	000 043 204 72	sealing cord 2,10 M		1	
4	999 919 049 02	oval-head screw 3 X 10		36	
5	964 572 015 01	blower	/L	1	
(5)	964 572 016 01	blower	/R	1	
6	964 572 433 01	rubber mounting		8	
7	964 572 219 01	intermediate layer	/L	1	
(7)	964 572 220 01	intermediate layer	/R	1	
8	964 572 229 00	housing cover	/L	1	
(8)	964 572 230 00	housing cover	/R	1	
(9)	964 572 361 00	cover		1	
9	964 573 361 00	cover centre		1 2	M 573
10	964 624 324 00	electric motor temperature mixing flap centre		2	
11	964 572 205 00	crank		2	
12	900 025 003 02	washer A 5,3		2	
13	900 910 007 02	lock nut VM 5		2	
14	N 015 704 1	ball socket		2	
16	964 572 507 01	bellows		3	
17	964 624 901 00	electric motor fresh-air flap with lever		1	

Pos	Part Number	Name	Remarks	Qty	Model
18	964 624 902 00	electric motor defroster flap with segment	/R	1	
19	999 596 002 40	linkage clip		4	
20	964 572 663 00	joint		1	
21	964 624 903 00	electric motor footwell flap with lever	/L	1	
22	964 659 901 00	temperature sensor mixing chamber repair kit		2	
23	964 572 415 00	bellows upper		1	
24	999 591 571 02	speed nut B 6,3		2	
25	964 572 437 02	gasket centre nozzle		1	
26	964 572 449 00	gasket lower		1	
27	928 570 423 00	tensioning spring		32	
28	999 919 097 02	oval-head screw 5 X 14		7	
29	900 143 135 07	tapping screw B 4,2 X 45		4	
30	964 572 343 00	lever upper		1	
31	964 572 345 00	connecting lever lower		2	
32	964 572 651 00	special nut		1	
33	964 572 551 00	gasket		1	
34	964 573 013 00	evaporator	-92	1	M 573
35	964 573 901 00	evaporator	93-	1	M 573
36	928 573 123 05	expansion valve	-92	1	M 573
36A	928 573 123 05	expansion valve	93-	1	M 573
--	000 043 300 11	screw M5X35		2	
37	999 707 250 40	o-ring 10,52 X 1,8	-92	1	M 573
37A	999 707 250 40	o-ring 10,6 X 2	93-	1	M 573
38	999 707 251 40	o-ring 14 X 1,8	-92	1	M 573
38A	999 707 251 40	o-ring 14 X 2	93-	1	M 573
39	964 573 861 00	guide piece		1	M 573
40	964 618 943 00	temperature sensor repair kit		1	M 573

- -- E N D -- -

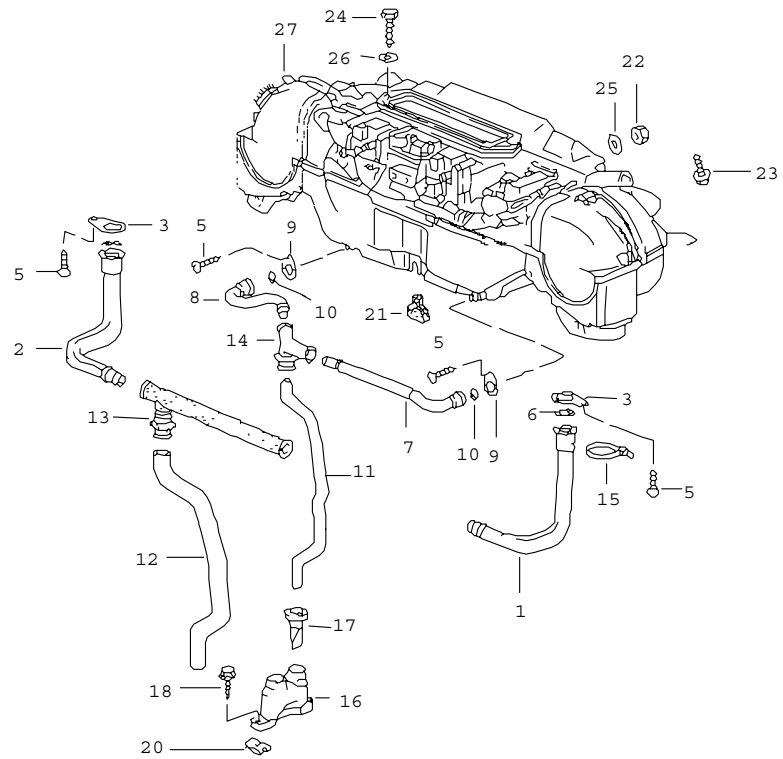

Pos	Part Number	Name	Remarks	Qty	Model
		water drain tube mount wiring harness heater air conditioner			
1	964 572 517 01	water drain tube	/L	1	
2	964 572 518 01	water drain tube upper	/R	1	
3	964 572 537 00	flange		2	
5	999 919 049 02	oval-head screw 3 X 10		4	
6	999 707 143 40	o-ring	89	2	
6	999 707 143 40	o-ring 18 X 2,5		4	
7	964 572 511 01	water drain tube 10 MM $		1	
(7)	993 572 511 00	water drain tube 18 MM $		1	
8	964 572 512 01	water drain tube 10 MM $		1	
(8)	993 572 512 00	water drain tube		1	
9	964 572 571 00	flange 10 MM $		2	
(9)	993 572 571 00	flange 18 MM $		2	
10	999 707 142 40	o-ring	89	2	
10	999 707 142 40	o-ring 13 X 2,5	90-	2	
11	964 572 561 00	water drain tube 10 MM $	/LL	1	
(11)	964 572 562 00	water drain tube 10 MM $	/RL	1	
(11)	993 572 561 00	water drain tube 18 MM $	/LL	1	
(11)	993 572 562 00	water drain tube 18 MM $ lower	/RL	1	
12	964 572 567 00	water drain tube	/LL	1	

Pos	Part Number	Name	Remarks	Qty	Model
(12)	964 572 568 00	water drain tube lower	/RL	1	
13	964 572 897 00	water drain tube		1	
14	964 572 898 00	grommet 10 MM $		1	
(14)	993 572 898 00	grommet 18 MM $		1	
15	999 513 003 40	tie-wrap		4	
16	964 572 393 00	guide piece for water drain tube		1	
17	964 572 563 00	check valve 10 MM$		1	
(17)	993 572 563 00	check valve 18 MM $		1	
18	900 187 104 02	tapping screw B 4,8 X 13		1	
20	999 507 023 02	speed nut B 4,8		1	
21	964 572 659 00	spacer rubber		1	
22	900 076 010 02	hexagon nut M 6		2	
23	N 090 183 1	screw B 6,3 X 16		1	
24	900 187 010 02	tapping screw B 6,3 X 19		2	
25	900 151 003 02	washer A 6,4		2	
26	803 955 637	rubber washer		2	
27	964 612 180 06	wiring harness	-92	1	M 573
27	964 612 180 07	wiring harness	93-	1	M 573
		- -- E N D -- -			

Pos	Part Number	Name	Remarks	Qty	Model

Model	Year	MG	SG	Illustration	Restrictions	Update	18:15	24.11.2005	PORSCHE PET PORSCHE
964	94	8	13	813-15		194			

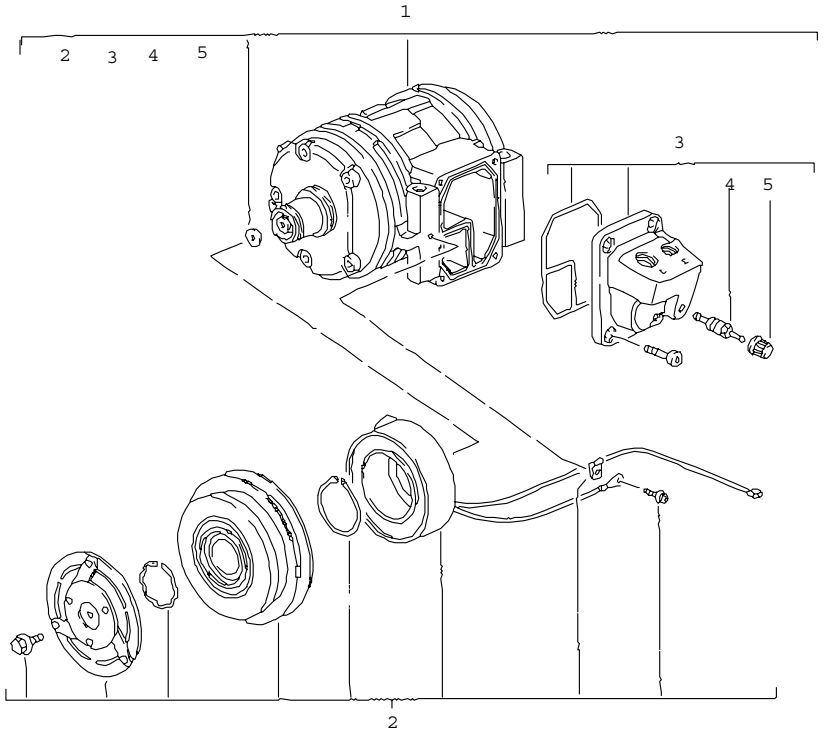

Pos	Part Number	Name	Remarks	Qty	Model
		compressor			
1	964 126 121 01	compressor	-92	1	M64.01/02/03
(1)	964 126 121 02	compressor	93-	1	M64.01/02/03
(1)	930 126 021 03	compressor	-92	1	M30.69
(1)	930 126 021 04	compressor	0 93-	1	M30.69/M64.5
2	964 126 901 00	repair kit magnetic clutch	-92	1	M64.01/02/03
2	964 126 901 01	repair kit magnetic clutch	93-	1	M64.01/02/03
(2)	930 126 904 00	repair kit magnetic clutch	-92	1	M30.69
(2)	930 126 904 01	repair kit magnetic clutch	93-	1	M30.69
3	964 126 902 00	repair kit suction & press. connect.	-92	1	
3	964 126 902 01	repair kit suction & press. connect.	93-	1	
4	928 573 908 03	valve insert	-92	2	
4	928 126 902 01	valve insert with cap	93-	2	
5	928 573 909 02	cap	-92	2	

- -- E N D -- -

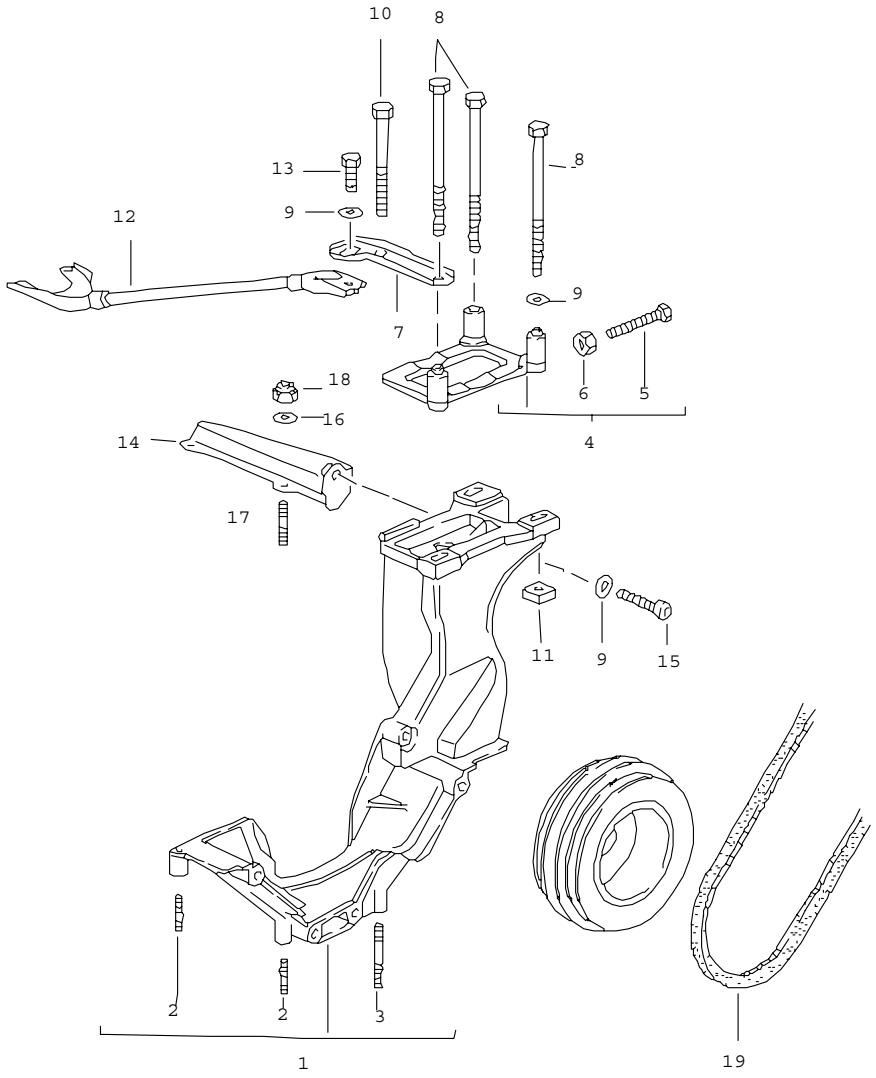

Pos	Part Number	Name	Remarks	Qty	Model
		compressor mounting driving mechanism			M64.01/02/03
1	964 126 026 00	bracket		1	
2	999 062 002 02	stud BM 6 X 15		3	
3	999 062 096 02	stud BM 6 X 40		1	
4	993 126 123 01	compressor plate		1	
5	N 040 237 1	hexagon-head bolt M 8 X 55		1	
6	900 076 025 02	hexagon nut M 8		1	
7	964 126 124 00	support		1	
8	900 074 051 02	hexagon-head bolt M 8 X 125		3	
9	999 025 125 09	washer 8,4 X 17 X 3,1		4	
10	N 010 385 3	hexagon-head bolt M 8 X 85		1	
11	964 126 311 00	nut M 8		4	
12	A 964 126 128 02	strut	89	1	
12	993 126 128 00	strut		1	
12	U 964 126 128 04	strut		1	
13	900 075 087 02	hexagon-head bolt M 8 X 16		1	
14	964 126 114 00	angle		1	
15	999 218 009 02	pan-head screw micro-self-locking M 8 X 40		1	
16	N 011 666 7	washer 6,4		2	
17	999 062 085 02	stud BM 6 X 20		2	
18	999 084 094 02	lock nut M 6		2	

Pos	Part Number	Name	Remarks	Qty	Model	Pos	Part Number	Name	Remarks	Qty	Model
19	999 192 352 50	v-belt 12,5 X 1080	-92	1							
(19)	999 192 363 50	v-belt 12,5 X 1085		1							
		- -- E N D -- -									

Model	Year	MG	SG	Illustration	Restrictions	Update	18:15	24.11.2005	PORSCHE PET PORSCHE
964	94	8	13	813-22		194			

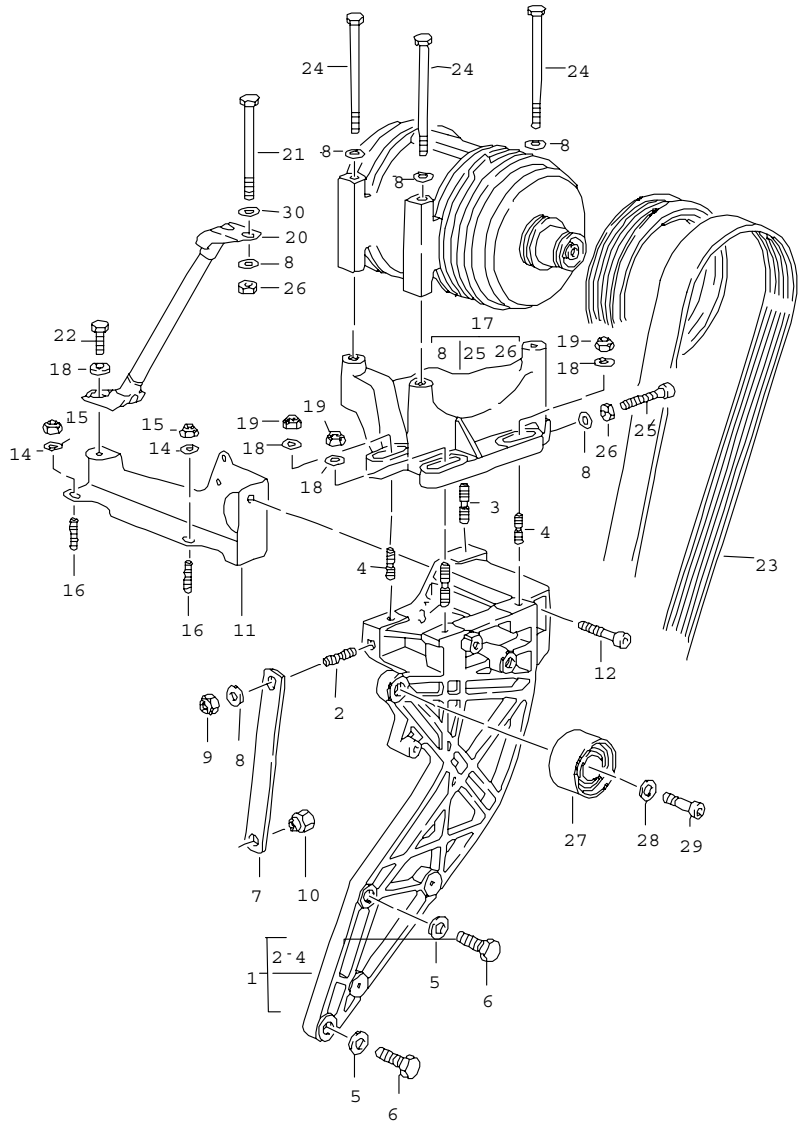

Pos	Part Number	Name	Remarks	Qty	Model
		compressor mounting driving mechanism see technical information GR.8 NR.2A/92	0		M30.69/M64.5
1	930 126 015 04	bracket	-92	1	
1	930 126 015 04	bracket	93-	1	
2	999 062 073 02	stud BM 8 X 15		1	
3	999 062 115 02	stud BM 8 X 32		2	
4	999 062 008 02	stud BM 8 X 25		2	
5	900 025 008 09	washer A 10,5		2	
6	N 010 289 4	hexagon-head bolt M 10 X 32		2	
7	911 126 124 02	strut		1	M30.69
(7)	964 126 124 20	strut		1	M64.50
8	900 025 007 02	washer A 8,4		4	
9	900 084 004 02	hexagon nut M 8		1	
10	964 126 125 20	nut	-92	1	
10	964 126 125 20	nut	93-	1	
11	930 126 114 04	angle		1	
12	999 218 009 02	pan-head screw M 8 X 40 micro-self-locking		1	
14	N 011 666 7	washer B 6,4		2	
15	999 084 094 02	lock nut M 6		2	
16	999 062 085 02	stud BM 6 X 20		2	
17	964 126 023 20	compressor plate	-92	1	
17	964 126 023 20	compressor plate	93-	1	

Pos	Part Number	Name	Remarks	Qty	Model
18	900 223 001 02	washer 8,4		4	
19	999 084 095 02	lock nut M 8		4	
20	930 126 128 00	strut		1	
21	N 010 385 3	hexagon-head bolt M 8 X 85		1	
22	900 075 087 02	hexagon-head bolt M 8 X 16		1	
23	A 999 192 365 50	poly-rib belt 6 PK 1411		1	
23	999 192 365 50	v-belt 6 PK 1554 see technical information GR.8 NR.2A/92		1	
24	900 074 048 02	hexagon-head bolt M 8 X 95		3	
25	900 067 320 02	pan-head screw M 8 X 55		1	
26	W 900 076 025 02	hexagon nut		1	
26	900 076 025 02	hexagon nut M 8		1	
27	930 126 216 00	tensioning roller		1	
28	999 031 085 00	washer 10,3 X 17 X 3		1	
29	900 067 046 02	pan-head screw M 10 X 18		1	
30	999 025 125 09	washer 8,4 X 17 X 3,1		3	
		- -- E N D -- -			

Pos	Part Number	Name	Remarks	Qty	Model

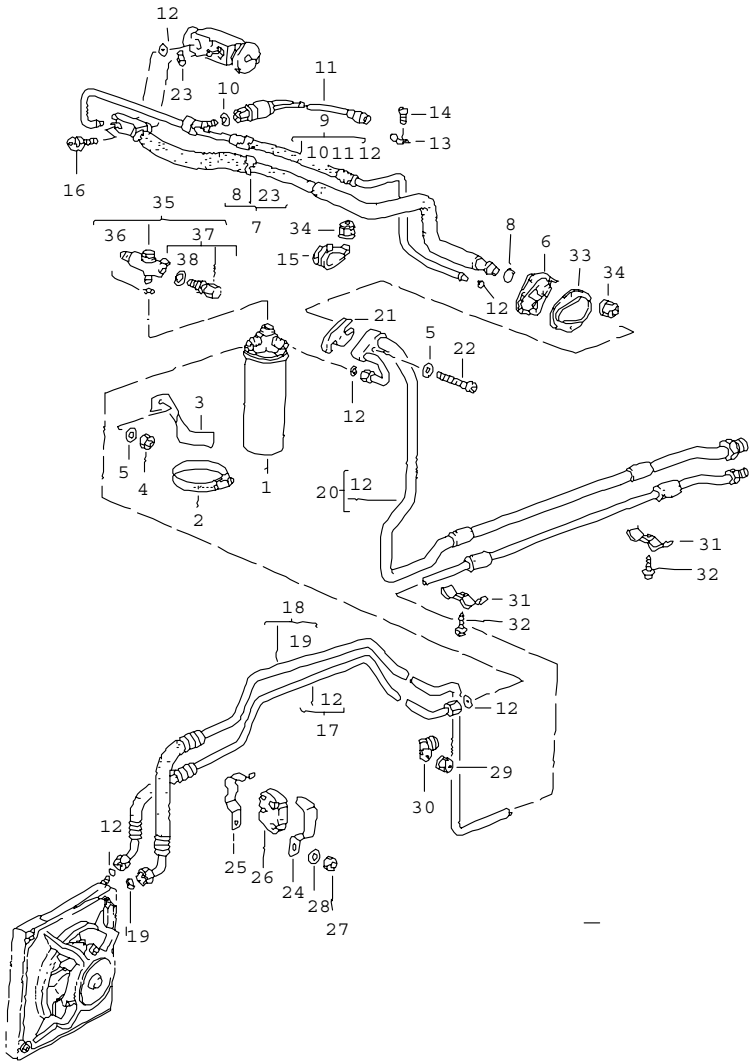

Pos	Part Number	Name	Remarks	Qty	Model
		refrigerant circuit front			
1	A 964 573 943 00	desiccator	-92	1	
1	964 573 943 00	desiccator	-92	1	
1	944 573 143 01	desiccator	93-	1	
2	999 512 390 00	hose clamp 60-80 MM	-92	1	
(2)	999 512 565 00	hose clamp 50-70 MM	93-	1	
3	964 573 451 00	support	-92	1	
3	964 573 451 01	support	93-	1	
4	900 910 012 02	lock nut M 6		1	
5	N 011 524 7	washer A 6,4		1	
6	964 573 553 00	rubber boot for		2	
7	964 573 091 01	intake pipe	-92	1	
7	964 573 091 01	intake pipe expansion valve wheel housing	93-	1	
8	999 707 252 40	o-ring 17 X 1,8	-92	1	
8	999 707 252 40	o-ring 17 X 2	93-	1	
9	964 573 103 01	pressure line	-92	1	
(9)	964 573 103 01	pressure line NW 8 wheel housing expansion valve	93-	1	
10	999 707 261 40	o-ring 9,3 X 1,78	-92	1	
10	999 707 261 40	o-ring 9,3 X 1,78	93-	1	
11	964 613 137 00	pressure switch	-92	1	
(11)	964 613 137 01	pressure switch when required order also:	93-	1	

Pos	Part Number	Name	Remarks	Qty	Model
--	999 652 787 40	connector housing		1	
--	999 652 786 12	flat connector		4	
--	999 652 788 40	seal		4	
12	999 707 247 40	o-ring 7,5 X 1,8	-92	4	
12	999 707 247 40	o-ring 7,5 X 2	93-	4	
13	964 573 467 01	retaining clip	-92	1	
(13)	964 573 467 02	retaining clip	93-	1	
14	999 919 164 09	oval-head screw 5 X 12		1	
15	999 511 187 02	clip 16-22 X 12		1	
16	900 075 347 02	screw M 6 X 28		1	
17	964 573 093 00	pressure line	-92	1	
(17)	964 573 093 01	pressure line NW 8 desiccator wheel housing	93-	1	
18	964 573 107 01	refrigerant line	-92	1	
(18)	964 573 107 01	refrigerant line NW 10 door sill condenser	93-	1	
19	999 707 250 40	o-ring 10,82 X 1,8	-92	1	
19	999 707 250 40	o-ring 10,6 X 2	93-	1	
20	964 573 092 00	intake pipe	-92	1	
(20)	964 573 092 01	intake pipe wheel housing door sill	93-	1	
21	964 573 731 00	flange		1	
22	900 067 013 02	pan-head screw M 6 X 35		1	
23	999 707 251 40	o-ring 14 X 1,8	-92	1	
23	999 707 251 40	o-ring 14 X 2	93-	1	
24	964 573 463 00	support upper part		1	
25	964 573 453 00	support lower part		1	
26	964 573 455 00	spacer rubber		1	
27	900 076 025 02	hexagon nut M 8		1	
28	900 025 007 02	washer A 8,4 X 16 X 1,6		1	
29	999 501 074 40	plastic nut		1	
30	N 020 620 1	clamp B 13 X 15		1	
31	964 207 303 00	support	-90	2	
31	964 207 303 00	support	91-	2	
32	N 090 183 1	screw B 6,3 X 13	-90	2	
32	N 090 183 1	screw B 6,3 X 16	91-	2	
33	964 573 565 00	cover		1	
34	999 501 074 40	plastic nut		2	
35	993 573 243 00	distributing piece	93-	1	
36	999 707 262 40	o-ring 6,7 X 1,8	93-	1	
37	928 573 311 00	relief valve	93-	1	
38	999 707 261 40	o-ring 9 X 1,8	93-	1	

- -- E N D -- -

Model	Year	MG	SG	Illustration	Restrictions	Update	18:16	24.11.2005	PORSCHE	PET	PORSCHE
964	94	8	13	813-30		194					

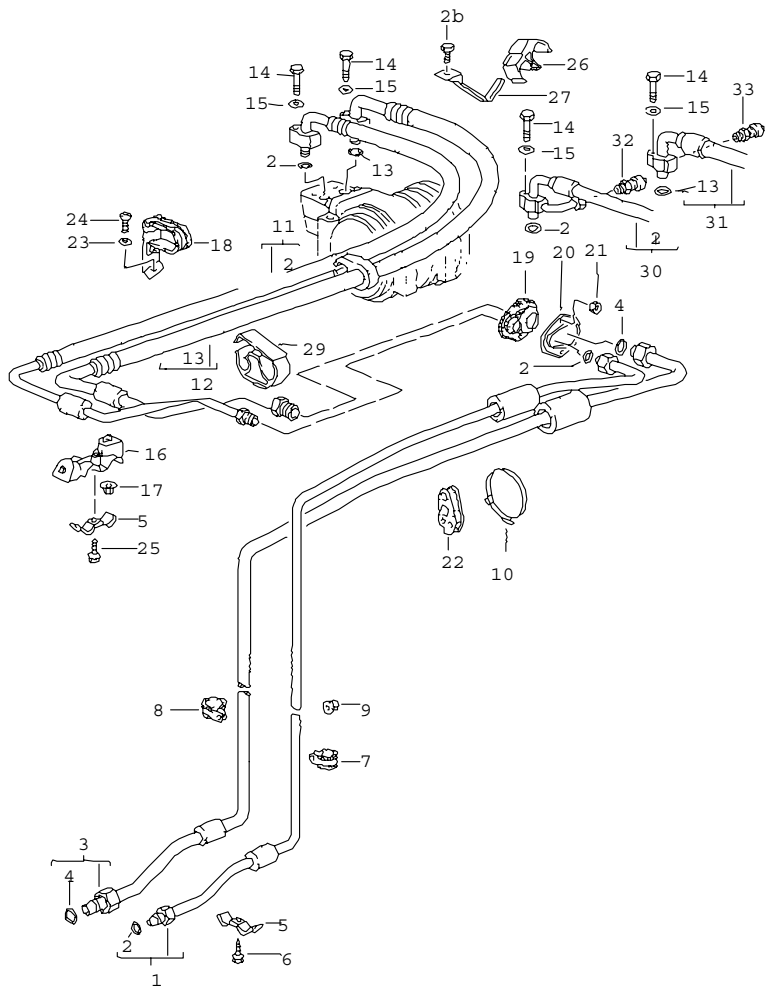

Pos	Part Number	Name	Remarks	Qty	Model
		refrigerant circuit rear			
1	964 573 105 00	refrigerant line	-92	1	
(1)	964 573 105 02	refrigerant line	93-	1	
(1)	964 573 105 02	refrigerant line		1	SPEEDSTER
2	999 707 250 40	o-ring 10,82 X 1,8	-92	3	
2	999 707 250 40	o-ring 10,6 X 2	93-	3	
3	964 573 098 02	intake pipe	-92	1	
(3)	964 573 098 02	intake pipe	93-	1	
(3)	964 573 098 02	intake pipe		1	SPEEDSTER
4	999 707 252 40	o-ring 17 X 1,8	-92	2	
4	999 707 252 40	o-ring 17 X 2	93-	2	
5	964 207 303 00	support	-90	2	
5	964 207 303 00	support	91-	2	
6	N 090 183 1	screw B 6,3 X 13	-90	1	
6	N 090 183 1	screw B 6,3 X 16	91-	1	
7	999 511 212 02	clip 14 X 15	-92	1	
7	N 020 602 1	clip 15 X 15	93-	1	
8	999 511 142 02	clamp 17 X 15	-92	1	
8	999 511 066 02	clamp 18 X 15	93-	1	
9	999 049 001 40	plastic nut T 5		1	
10	999 513 010 40	tie-wrap 9 X 250		1	
11	964 573 097 01	refrigerant line	-92	1	CARRERA 2/4 CARRERA RS TURBO-LOOK

Pos	Part Number	Name	Remarks	Qty	Model
11	964 573 097 01	refrigerant line	93-	1	CARRERA 2/4/ TURBO-LOOK
(11)	964 573 097 02	refrigerant line		1	SPEEDSTER
(11)	965 573 097 01	refrigerant line F >>96NS4 70091		1	TURBO
(11)	965 573 097 01	refrigerant line F 96NS4 70092>>	-92	1	TURBO
(11)	965 573 097 02	refrigerant line	93-	1	TURBO
12	964 573 099 01	intake pipe	-92	1	CARRERA 2/4 CARRERA RS TURBO-LOOK
12	964 573 099 01	intake pipe	93-	1	CARRERA 2/4/ TURBO-LOOK
(12)	964 573 099 02	intake pipe		1	SPEEDSTER
(12)	965 573 099 00	intake pipe F >>96NS4 70091		1	TURBO
(12)	965 573 099 01	intake pipe F 96NS4 70092>>	-92	1	TURBO
(12)	965 573 099 02	intake pipe	93-	1	TURBO
13	999 707 251 40	o-ring 14 X 1,8	-92	1	
13	999 707 251 40	o-ring 14 X 2	93-	1	
14	999 067 028 02	hexagon-head bolt micro-self-locking M 8 X 32		2	
15	900 025 007 02	washer A 8,4		2	
16	999 507 354 40	cable holder 2 X 28/40		1	
17	999 049 022 40	plastic nut T 5		2	
18	964 126 015 00	support	-90	1	CARRERA 2/4
(18)	964 126 011 01	support	91-92	1	CARRERA 2/4 CARRERA RS TURBO-LOOK
(18)	964 126 011 02	support	93-	1	CARRERA 2/4 CARRERA RS TURBO-LOOK
19	964 573 553 00	rubber boot		1	
20	964 573 565 00	cover		1	
21	900 076 010 02	hexagon nut M 6		2	
22	964 201 615 00	rubber mounting		1	
23	N 011 524 7	washer A 6,4	-90	1	CARRERA 2/4
23	900 025 003 02	washer A 5,3	91-	2	CARRERA 2/4/ TURBO-LOOK CARRERA RS
24	900 067 008 02	pan-head screw M 6 X 12	-90	1	CARRERA 2/4
24	900 067 111 02	pan-head screw M 5 X 18	91-	2	CARRERA 2/4/ TURBO-LOOK CARRERA RS
25	999 919 085 02	screw 6 X 22		1	
26	964 573 471 00	support	-92	1	CARRERA 2/4/ TURBO-LOOK
(26)	964 573 471 01	support	93-	1	
27	964 573 473 00	mounting support		1	CARRERA 2/4/ TURBO-LOOK CARRERA RS
28	N 010 210 13	hexagon-head bolt M 6 X 10		1	CARRERA 2/4/ TURBO-LOOK CARRERA RS
29	964 573 475 00	support	/R	1	TURBO
(29)	964 573 471 00	support	/L	1	TURBO
30	964 573 097 01	refrigerant line	93-	1	CARRERA2/4 SPEEDSTER
30	965 573 097 02	refrigerant line	93-	1	TURBO
31	964 573 099 01	intake pipe	93-	1	CARRERA 2/4 SPEEDSTER
31	965 573 099 02	intake pipe	93-	1	TURBO
32	993 573 446 00	valve	93-	1	
33	993 573 445 00	valve	93-	1	

- -- E N D -- -

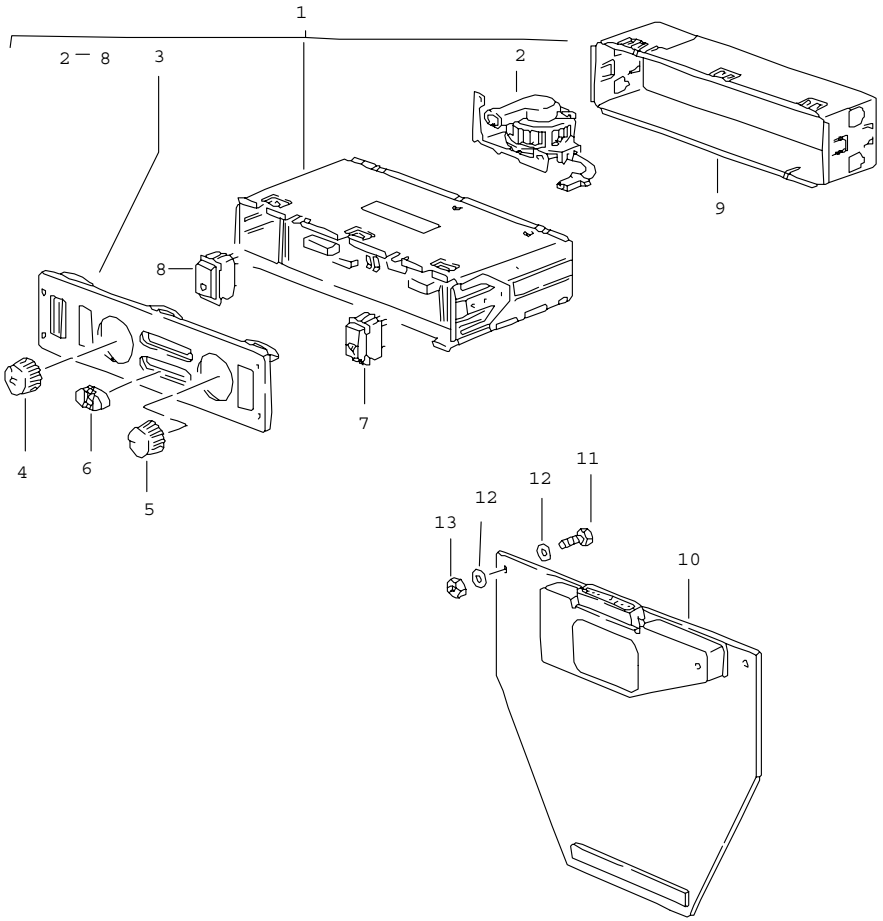

Pos	Part Number	Name	Remarks	Qty	Model
		control switch driver			
		see technical information GR.8 NR.2/91			
1	964 659 045 00	control switch	/LL -90	1	C.2/4
	1DB	black			
(1)	964 659 046 00	control switch	/RL -90	1	C.2/4
	1DB	black			
1	964 659 047 00	control switch	/LL -90	1	C.2/4:M 573
	1DB	black			
(1)	964 659 048 00	control switch	/RL -90	1	C:2/4:M 573
	1DB	black			
1	964 659 045 01	control switch	/LL 91-	1	C.2/4
	01C	black			
(1)	964 659 046 01	control switch	/RL 91-	1	C.2/4
	01C	black			
1	964 659 047 01	control switch	/LL 91-	1	TURBO/
	01C	black			C.2/4 M573
(1)	964 659 048 01	control switch	/RL 91-	1	TURBO/ C.2/4 M573
	01C	black for cars up to MOD.90 see workshop manual S.87-27 see technical information GR.8 2/93			
2	964 659 148 00	blower interior sensor		1	
3	964 659 945 00	cover		1	
4	964 659 146 00	knob		1	
	01C	black			
5	944 653 208 00	knob		1	
6	944 653 205 00	knob		2	

Pos	Part Number	Name	Remarks	Qty	Model
7	944 653 923 00	tip switch		1	
(7)	944 653 921 00	tip switch	/LL	1	M 573
8	944 653 924 00	tip switch		1	
(8)	944 653 922 00	tip switch		1	M 573
(8)	964 653 921 00	tip switch	/RL	1	M 573
9	964 659 103 00	retaining frame		1	
10	964 624 010 02	driver for blower		1	
11	N 010 207 6	hexagon-head bolt M 5 X 12		2	
12	900 025 003 02	washer A 5,3		4	
13	A N 011 005 14	hexagon nut		2	
13	N 011 005 14	hexagon nut M 5		2	
		- -- E N D -- -			

Pos	Part Number	Name	Remarks	Qty	Model

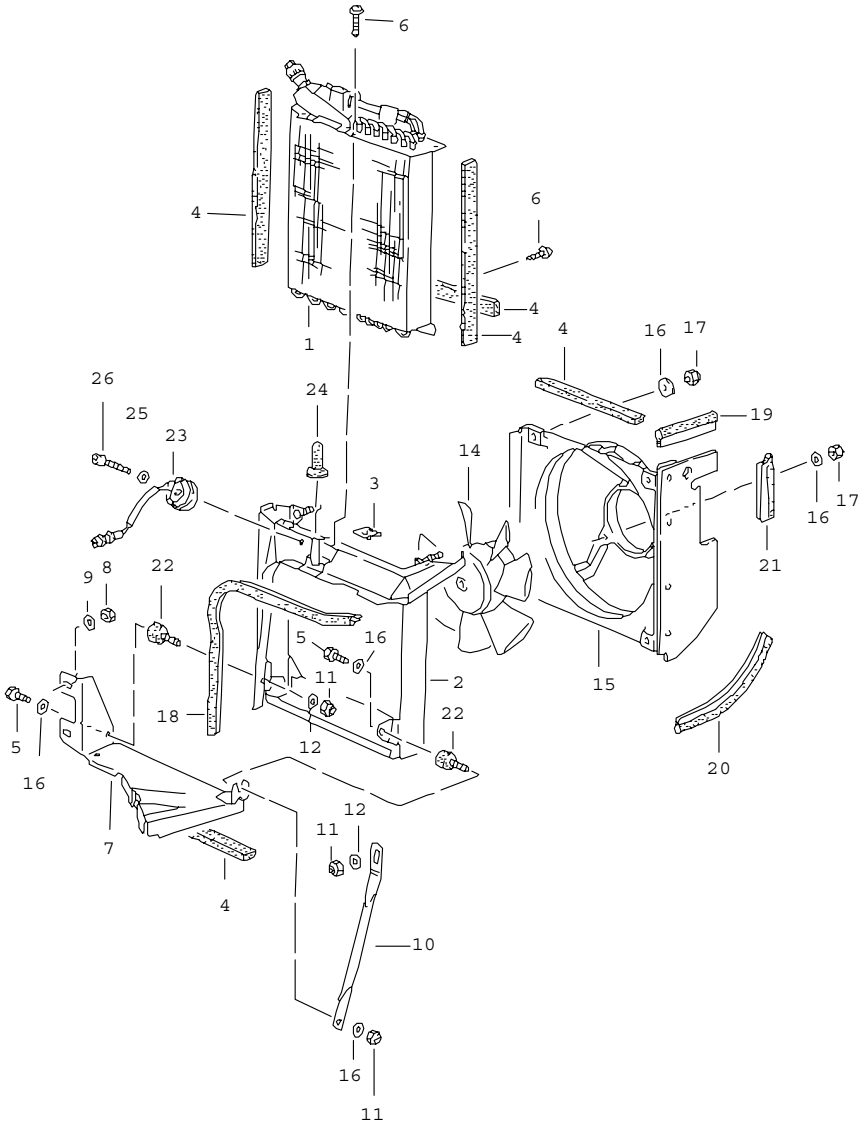

Pos	Part Number	Name	Remarks	Qty	Model
		condenser blower front			
1	A 964 573 011 03	condenser		1	
1	993 573 011 01	condenser		1	
2	964 573 241 01	retaining frame	-91	1	
2	964 573 241 01	retaining frame	92-	1	
3	999 591 713 02	speed nut B 4,2		3	
-	A 000 043 204 88	sealing strap		*	
-	000 043 204 88	sealing strap roller with 10 meters 9 X 3 280 MM		*	
5	N 010 208 5	hexagon-head bolt M 6 X 8		2	
6	900 143 117 02	combination tapping screw B 4,2 X 9,5		4	
7	964 573 301 00	bracket condenser		1	
8	900 910 022 02	lock nut VF M 8		3	
9	900 151 008 02	washer B 8,4		3	
10	993 504 139 00	strut		1	
11	900 910 010 09	lock nut M 6		2	
12	N 011 666 7	washer B 6,4		2	
14	964 624 035 01	blower		1	
15	964 624 031 00	air-guide cowl		1	
16	N 011 524 7	washer A 6,4		3	
17	900 076 010 02	hexagon nut M 6		3	
--	A 999 911 398 40	protective edging		1	

Pos	Part Number	Name	Remarks	Qty	Model	Pos	Part Number	Name	Remarks	Qty	Model
--	999 911 398 40	protective edging 557 MM		*							
19	-	180 MM		1							
20	-	425 MM		1							
21	-	90 MM		1							
22	999 703 365 00	bonded rubber buffer 25 X 15		2							
23	964 616 521 01	ballast resistor		1							
24	944 573 457 00	rubber sleeve		1							
25	N 011 556 2	washer 5,3		1							
26	N 044 728 1	pan-head screw M 5 X 20		1							
		- -- E N D -- -									

Model	Year	MG	SG	Illustration	Restrictions	Update		
964	94	8	98	REP		194	9:50	25.11.2005

Pos	Part Number	Name	Remarks	Qty	Model
		repair kits			
>>	> 964 538 001 27	set of locks	/LL /RL	1	M 564
>>	> 964 538 001 21	set of locks airbag for cars with glove box cover locking device left	/LL	1	
>>	> 964 538 001 25	set of locks airbag for cars with glove box cover locking device centre order also:	/LL	1	
-	964 538 061 00	glove compartment lock		1	
	01C	black without lock cylinder			
		comprising:			
		steering lock		1	
		outer door handle	/L	1	
		outer door handle	/R	1	
		glove compartment lock		1	
		lock		1	
		key tag		1	
		replacement key		3	
		fuel tank cap lockable order also:		1	
-	944 538 041 00	key lamp		2	
>>	> 911 731 927 01	repair kit door mirror driver's door	/LL/L-91	1	CARRERA
>>	> 911 731 928 01	repair kit door mirror passenger's door	/LL/R-91	1	CARRERA
>>	> 911 731 931 01	repair kit door mirror passenger's door	/RL/L-91	1	CARRERA

Model	Year	MG	SG	Illustration	Restrictions	Update		
964	94	8	98	REP		194	9:50	25.11.2005

Pos	Part Number	Name	Remarks	Qty	Model
>>	> 911 731 932 01	repair kit door mirror driver's door comprising: mirror housing mirror base mounting piece hexagon-head bolt M 5 X 10 desk pad reinforcement tubular rivet pan-head screw micro-self-locking AM 5 X 35 cap guide tube adjusting washer lower compression spring adjusting washer upper gasket when required order also:	/RL/R-91	1 1 1 1 3 1 1 2 1 1 1 1 1 1 1	CARRERA
-	944 731 027 01	electric installation set		1	
-	944 731 035 02	mirror glass plan		1	
-	944 731 035 04	mirror glass plan		1	(S)
-	944 731 035 03	mirror glass convex		1	
-	944 731 035 05	mirror glass convex		1	(S)
		- -- E N D -- -			

Model	Year	MG	SG	Illustration	Restrictions	Update	18:17	24.11.2005	PORSCHE PET PORSCHE
964	94	9	01	901-00		194			

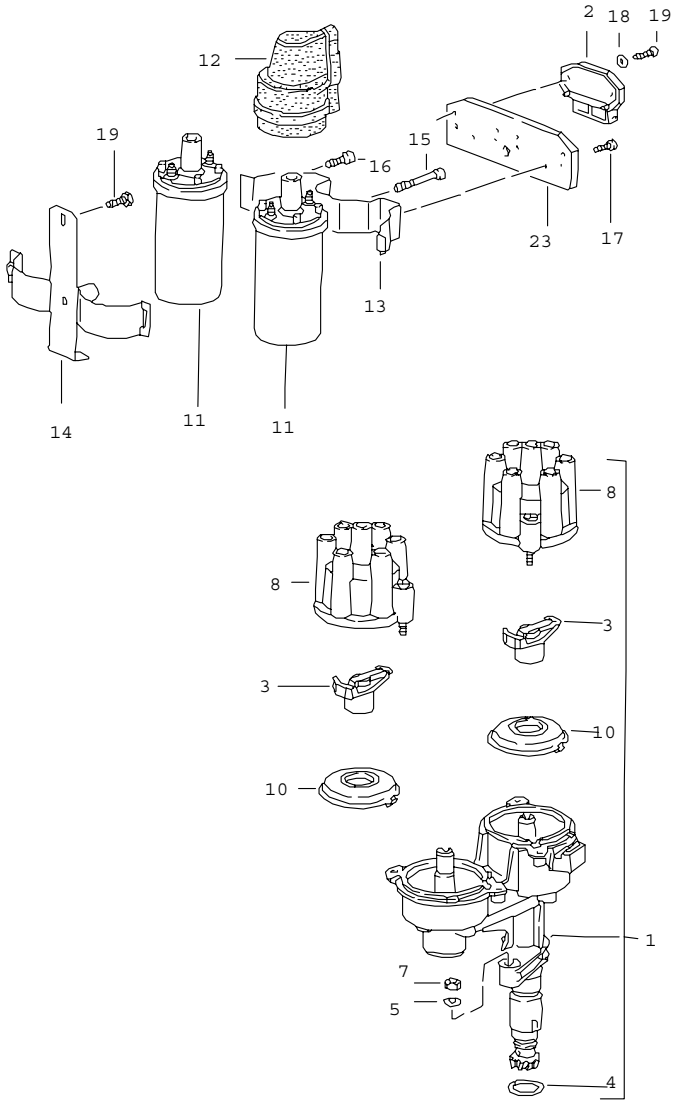

Pos	Part Number	Name	Remarks	Qty	Model
		engine electr. equipment 1			M 64.01/02 M 64.03
1	> 930 602 015 01	distributor		1	
2	928 602 706 01	ignition switch unit		2	
3	930 602 902 02	rotor		2	
4	911 602 102 01	sealing ring	-92	1	
4	911 602 102 01	sealing ring	93-	1	
5	900 025 007 02	washer B 8,4		1	
7	999 084 095 02	lock nut M 8		1	
8	930 602 919 01	distributor cap		2	
10	930 602 909 00	dust cover		2	
11	944 602 115 00	ignition coil		2	
12	944 602 801 00	protection cap		2	
13	911 602 173 00	restraining strap upper part		1	
14	911 602 171 00	restraining strap lower part		1	
15	N 014 719 2	pan-head screw M 6 X 50		1	
16	N 014 740 2	pan-head screw M 6 X 16		1	
17	900 119 059 02	pan-head screw M 4 X 10		2	
18	N 011 555 1	washer 4,3		4	
19	N 014 119 1	oval-head screw M 4 X 20		4	
20	N 014 750 3	pan-head screw M 6 X 10		1	
23	911 602 377 00	heat dissipator		1	
		- -- E N D -- -			

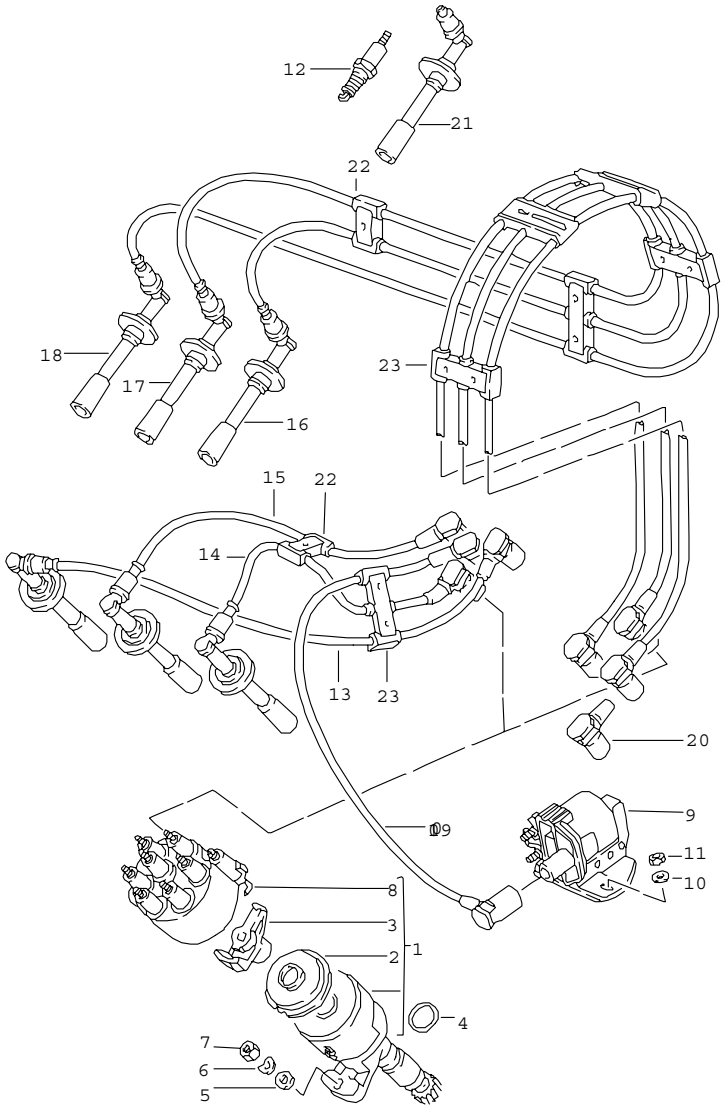

Pos	Part Number	Name	Remarks	Qty	Model
		engine electr. equipment 1			M 30.69 M 64.50
1	> 930 602 023 00	distributor		1	M 30.69
1	> 965 602 024 00	distributor		1	M 64.50
2	930 602 918 00	dust cover		1	
3	930 602 902 02	rotor		1	
4	911 602 102 01	sealing ring		1	
5	900 025 007 02	washer B 8,4		1	
6	N 012 241 8	spring washer B 8		1	
7	900 076 025 02	hexagon nut M 8		1	
8	930 602 919 00	distributor cap		1	
9	965 602 116 00	ignition transformer		1	
10	N 011 524 7	washer 6,4		2	
11	900 076 010 02	hexagon nut M 6		2	
12	999 170 186 90	spark plug WR4 DPO		6	M 30.69
12	999 170 195 90	spark plug FR6 LDC		6	M 64.50
13	965 602 060 08	ignition lead cylinder 1		1	M 30.69
13	965 602 031 00	ignition lead cylinder 1		1	M 64.50
14	965 602 060 09	ignition lead cylinder 2		1	M 30.69
14	965 602 032 00	ignition lead cylinder 2		1	M 64.50
15	965 602 060 10	ignition lead cyl. 3		1	M 30.69
15	965 602 033 00	ignition lead cyl. 3		1	M 64.50
16	965 602 060 11	ignition lead cyl. 4		1	M 30.69

Pos	Part Number	Name	Remarks	Qty	Model
16	965 602 034 00	ignition lead cyl. 4		1	M 64.50
17	965 602 060 12	ignition lead cylinder 5		1	M 30.69
17	965 602 035 00	ignition lead cylinder 5		1	M 64.50
18	965 602 060 13	ignition lead cyl. 6		1	M 30.69
18	965 602 036 00	ignition lead cyl. 6		1	M 64.50
19	965 602 060 15	ignition lead		1	M 30.69
19	965 602 037 00	ignition lead		1	M 64.50
20	928 602 557 01	suppressor cap		8	
21	911 602 315 00	spark plug socket		6	M 30.69
21	964 602 314 00	spark plug socket		6	M 64.50
22	928 602 322 00	cable holder		2	
23	928 602 323 00	support		10	
		- -- E N D -- -			

Pos	Part Number	Name	Remarks	Qty	Model

Model	Year	MG	SG	Illustration	Restrictions	Update	18:17	24.11.2005	PORSCHE	PET	PORSCHE
964	94	9	01	901-02		194					

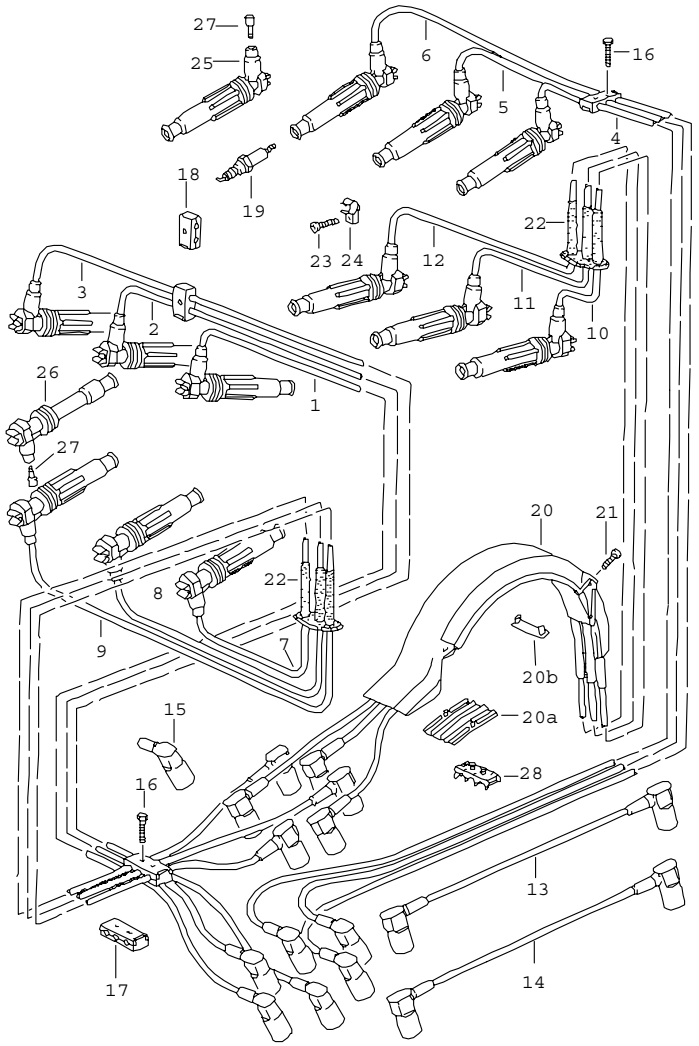

Pos	Part Number	Name	Remarks	Qty	Model
		electr. equipment-engine 2			M 64.01/02 M 64.03
1	964 602 060 01	ignition lead cylinder 1		1	
2	964 602 060 02	ignition lead cylinder 2		1	
3	964 602 060 03	ignition lead cyl. 3		1	
4	964 602 060 04	ignition lead cyl. 4		1	
5	964 602 060 05	ignition lead cylinder 5		1	
6	964 602 060 06	ignition lead cyl. 6		1	
7	964 602 060 17	ignition lead cylinder 1	-91	1	
7	964 602 060 17	ignition lead cylinder 1	92-	1	
8	964 602 060 18	ignition lead cylinder 2	-91	1	
8	964 602 060 18	ignition lead cylinder 2	92-	1	
9	964 602 060 13	ignition lead cyl. 3		1	
10	964 602 060 14	ignition lead cyl. 4		1	
11	964 602 060 19	ignition lead cylinder 5	-91	1	
11	964 602 060 19	ignition lead cylinder 5	92-	1	
12	964 602 060 20	ignition lead cyl. 6	-91	1	
12	964 602 060 20	ignition lead cyl. 6	92-	1	
13	964 602 060 07	ignition lead		1	
14	964 602 060 08	ignition lead		1	
15	928 602 557 01	suppressor cap		16	
16	N 010 264 4	hexagon-head bolt		6	

Pos	Part Number	Name	Remarks	Qty	Model	Pos	Part Number	Name	Remarks	Qty	Model
17	928 602 323 00	support		2							
18	911 609 593 00	cable holder		4							
19	999 170 183 90	spark plug FR 5 DTC		12							
20	911 602 035 00	cover upper part		1							
20A	911 602 236 01	cover lower part		1							
20B	964 602 237 00	cover lower part		3							
21	900 119 099 07	pan-head screw		2							
22	911 602 403 02	rubber sleeve		2							
23	999 919 096 00	oval-head screw		6							
24	964 602 559 00	clip		6							
25	964 602 314 00	spark plug socket		11							
26	911 602 313 00	spark plug socket cyl. 3 exhaust		1							
27	911 609 310 00	threaded sleeve		X							
28	911 602 325 00	support		1							
		- -- E N D -- -									

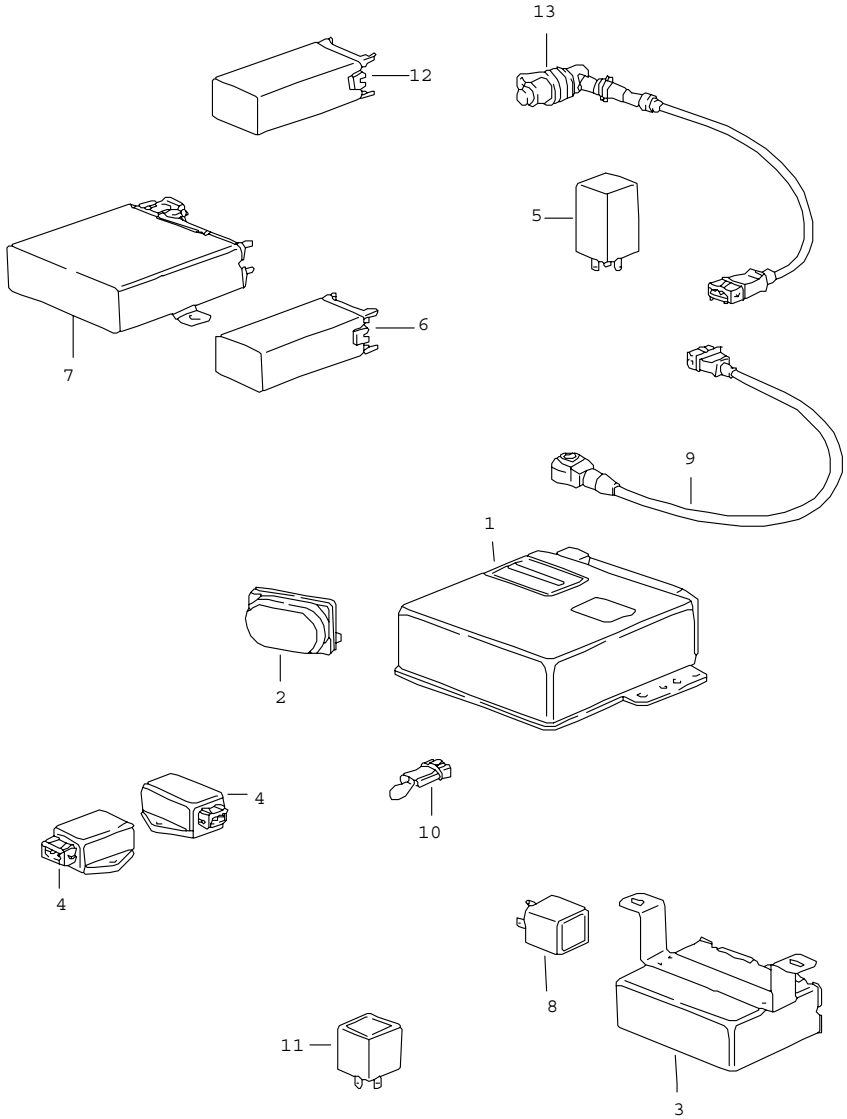

Pos	Part Number	Name	Remarks	Qty	Model
		control units			
1	> 911 618 124 04	control unit - dme -	-90	1	M 64.01/02
1	> 964 618 124 03	control unit - dme -	91-	1	M 64.01/02 M 64.02 M 114
1	> 964 618 124 04	control unit - dme -	91-	1	M 64.03 M 64.01 M 114
(1)	965 618 103 01	lambda control unit		1	TURBO
(1)	964 618 115 01	control unit TIPTRONIC	-91	1	
(1)	964 618 115 02	control unit TIPTRONIC	-91	1	M 114
(1)	964 618 110 00	control unit TIPTRONIC	92-	1	
2	911 606 151 00	altitude correction sensor		1	
3	964 641 330 00	central indicator		1	
3	965 641 330 00	central indicator		1	TURBO
4	993 606 153 00	lateral accelerat. sensor		2	
5	964 618 142 00	control unit for rear spoiler	-90	1	
6	964 618 212 00	control unit for rear spoiler		1	
-	964 618 121 00	support	/LL	1	
-	964 618 117 01	support for POS. 6	/RL	1	
7	911 617 227 00	control unit cruise control regulator		1	
8	111 953 227 D	flasher relay		1	
9	964 606 141 00	knock sensor use also:		2	

Pos	Part Number	Name	Remarks	Qty	Model
-	999 217 082 02	hexagon-head bolt micro-self-locking M 8 X 30 see workshop manual 993 GR.97-013		2	
10	928 607 422 00	coding plug		1	
10	964 612 253 00	coding plug		1	M 249
11	928 618 104 00	relay rear window wiper		1	
12	928 637 104 03	control unit	-90	1	
12	928 637 104 04	control unit	-90	1	(CH)
(12)	928 618 260 01	control unit alarm system central locking system	91-	1	
(12)	964 618 103 00	control unit brightness control		1	
13	911 606 217 02	pulse sender	89	1	M 64.01
13	911 606 217 03	pulse sender see workshop manual 993 GR.97-013	90-	1	M 64.01/02 M 30.69 M 64.03
-	965 618 131 01	control unit acceleration enrichment	91	1	TURBO
-	965 618 131 01	control unit acceleration enrichment	92	1	TURBO
-	965 618 131 02	control unit acceleration enrichment	93-	1	TURBO
-	965 618 130 00	multifunction control unit	-92	1	TURBO
-	965 618 130 01	multifunction control unit	93-	1	TURBO
-	965 641 381 00	control unit for on-board computer		1	TURBO
-	964 618 022 00	support for control units	/L	1	
-	964 618 204 02	support for control units	/R	1	

- -- E N D -- -

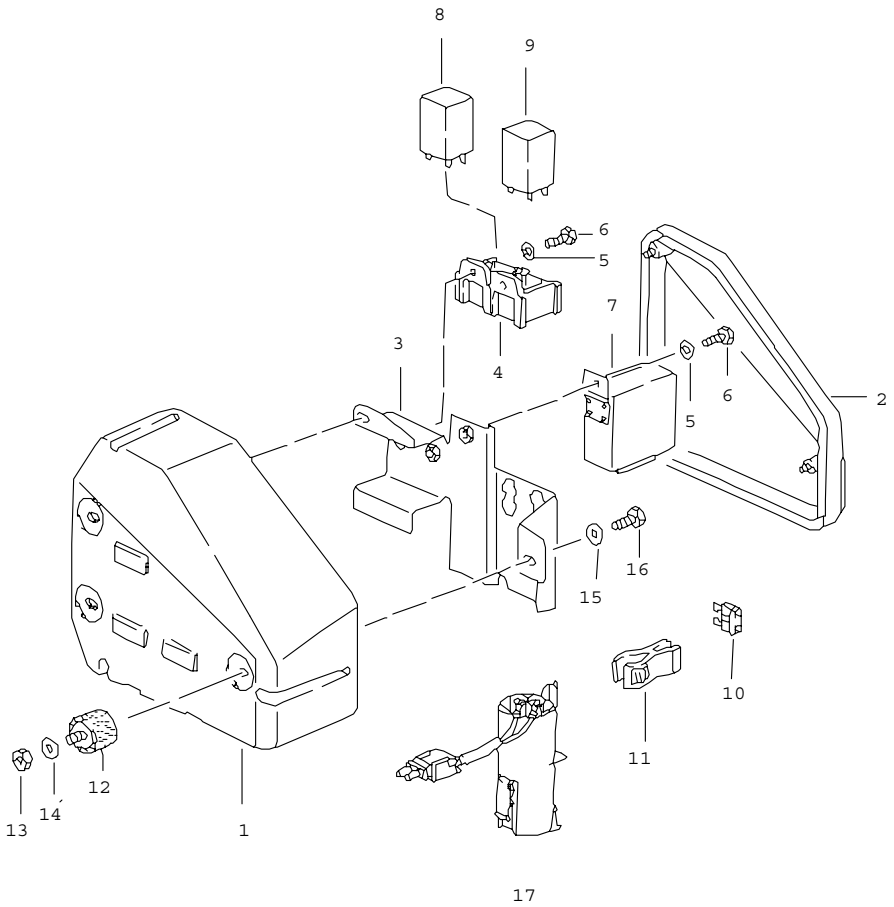

Pos	Part Number	Name	Remarks	Qty	Model
		central electrical system engine compartment			CARRERA2/4 TURBO-LOOK CARRERA RS
1	964 610 131 00	housing		1	
2	964 610 022 00	cover		1	
	01C	black			
3	964 610 181 00	plate		1	
4	928 615 511 00	relay holder		2	
5	900 025 003 02	washer		3	
6	N 010 205 6	hexagon-head bolt		3	
7	911 615 115 00	relay rear window heating		1	
8	964 615 215 00	double relay		1	
9	811 951 253	relay		1	
10	999 607 005 00	fuse 7,5 A		1	
10	999 607 009 00	fuse 25 A		2	
11	443 941 802	tool		1	
-	911 612 287 00	fuse holder		3	
12	999 703 384 00	silentbloc		3	
13	N 011 005 14	hexagon nut M 5		3	
14	900 025 007 02	washer		3	
15	900 031 011 02	washer		3	
16	N 010 205 6	hexagon-head bolt		3	
17	964 645 011 00	suppressor condenser		1	
		- -- E N D -- -			

Model	Year	MG	SG	Illustration	Restrictions	Update	18:18	24.11.2005	PORSCHE PET PORSCHE
964	94	9	01	901-06		194			

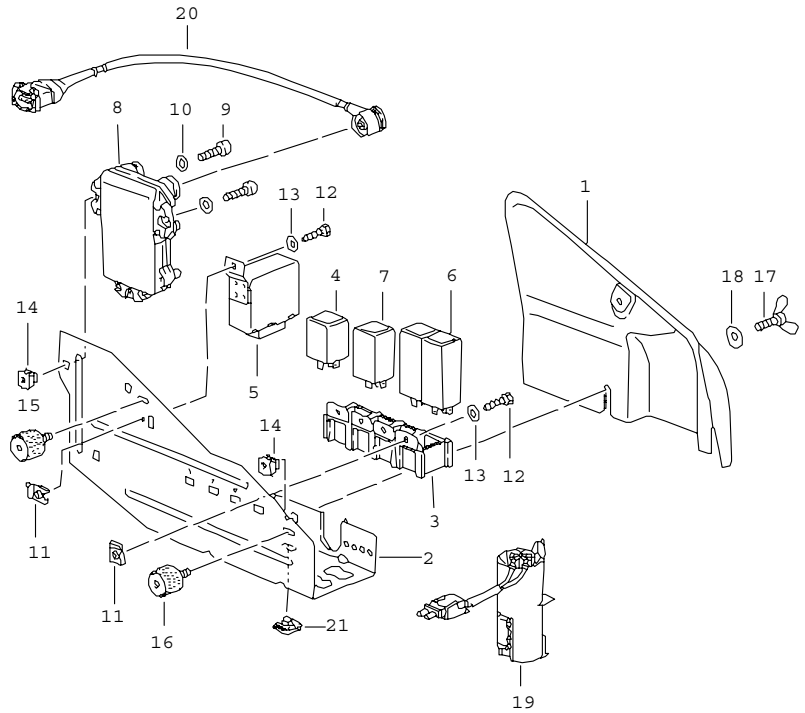

Pos	Part Number	Name	Remarks	Qty	Model
		central electrical system engine compartment			TURBO
1	965 610 105 00	cover		1	
2	965 610 281 02	plate		1	
3	928 615 511 00	relay holder		4	
4	141 951 253 B	relay		1	
5	964 615 215 00	relay		1	
6	811 951 253	double relay		2	
7	911 615 115 00	relay		1	
8	965 602 706 01	switch unit	-92	1	TURBO
8	> 965 602 706 02	switch unit	93-	1	TURBO
9	N 014 703 2	pan-head screw M 6X18		2	
10	900 031 011 02	washer A 6,4		2	
11	N 015 429 2	speed nut B 4,2		4	
12	900 187 013 02	tapping screw BZ 4,2X13		4	
13	900 151 028 02	washer B 4,3		4	
14	999 507 321 02	captive nut M 6		3	
15	999 703 384 00	silentbloc		2	
16	999 703 384 00	silentbloc		1	
17	900 029 102 02	winged screw		2	
18	900 151 003 02	washer A 6,4		2	
19	965 645 011 00	suppressor condenser		1	
20	965 606 175 00	connecting line for speed sensor		1	
		- -- E N D -- -			

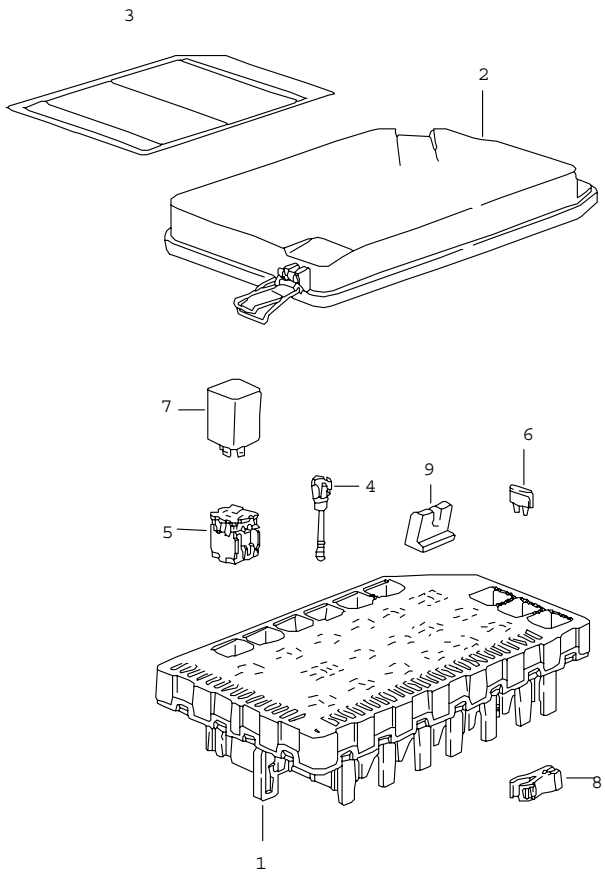

Pos	Part Number	Name	Remarks	Qty	Model
		central electrical system			
		see tpi GR.9 , NR.9 , 07/94			
1	964 610 011 00	central electrical system		1	
2	964 610 076 00	cover		1	
3	964 610 209 00	indication sticker	89	1	
3	964 610 209 03	indication sticker	90	1	
3	964 610 209 04	indication sticker	91	1	CARRERA 2
3	964 610 209 10	indication sticker	92	1	CARRERA 2
3	964 610 209 13	indication sticker	93-	1	CARRERA 2
3	964 610 209 75	indication sticker		1	CARRERA RS
3	964 610 209 05	indication sticker	91	1	CARRERA 4
3	964 610 209 09	indication sticker	92	1	CARRERA 4
3	964 610 209 12	indication sticker	93-	1	CARRERA 4
3	965 610 209 00	indication sticker	91	1	TURBO
3	965 610 209 02	indication sticker	92	1	TURBO
3	965 610 209 03	indication sticker	93-	1	TURBO
3	964 610 209 11	indication sticker	92	1	CABRIO TURBO-LOOK
3	964 610 209 14	indication sticker	93-	1	CABRIO TURBO-LOOK
4	944 610 611 00	screw		1	
5	928 610 511 00	relay carrier		X	
6	999 607 005 00	fuse 7,5 A		17	
6	999 607 007 00	fuse 15 A		12	
6	999 607 009 00	fuse 25 A		7	
6	999 607 010 00	fuse 30 A		4	
6	999 607 052 00	fuse 40 A		3	

Pos	Part Number	Name	Remarks	Qty	Model
7	-	relay		X	
R 01	141 951 253 B	relay rear fog light back-up light		1	
R 04	811 951 253	double relay oil cooler blower		1	
R 11	141 951 253 B	relay KL 15		1	
R 12	964 610 183 02	bridge adapter		1	
R 12	964 610 183 03	bridge adapter		1	M 487
R 12	964 610 183 05	bridge adapter		1	M 193
R 12	964 610 184 01	bridge adapter		1	
R 14	964 610 183 76	bridge adapter		1	CARRERA RS (J)
R 14	811 951 253	double relay air conditioner		1	
R 21	964 610 184 00	bridge adapter		1	M 439
R 22	944 615 112 02	relay power windows		1	
R 23	928 615 203 00	relay fanfare		1	
R 24	964 618 221 00	control unit frequency converter	91-	1	CARRERA 4
R 31	141 951 253 B	relay fog headlamp		1	
R 33	191 937 503	relay X		1	
R 33	928 615 124 01	relay anti-lock brake system		1	
R 41	993 615 227 00	relay - dme -		1	
R 42	993 615 101 00	switch unit		1	
R 43	928 618 111 00	relay headlight washer system		1	
R 44	964 617 117 00	relay temperature control		1	
R 51	964 615 135 00	relay brake booster		1	
R 52	964 618 220 00	control unit frequency converter		1	
R 53	928 618 113 01	relay		1	M 286
R 53	928 615 211 00	bridge adapter	90-	1	
R 53	964 610 184 00	bridge adapter		1	
R 61	141 951 253 B	relay automatic transmission	90-	1	M 249
--	964 618 145 00	control unit selector lever lock	92-	1	
-	964 618 102 00	relay warning time relay		1	M 249
-	911 618 313 01	control unit for convertible top see technical information GR.6, NR. 6/96		1	M 439
-	964 618 105 00	plastic nut for control unit folding top control		2	M 439
-	928 618 102 03	warning time relay		1	M 215
8	443 941 802	tool		1	
9	964 610 232 00	spacer		2	
--	964 632 106 01	stop for contact switch luggage boot lamp	-91	1	

- -- E N D -- -

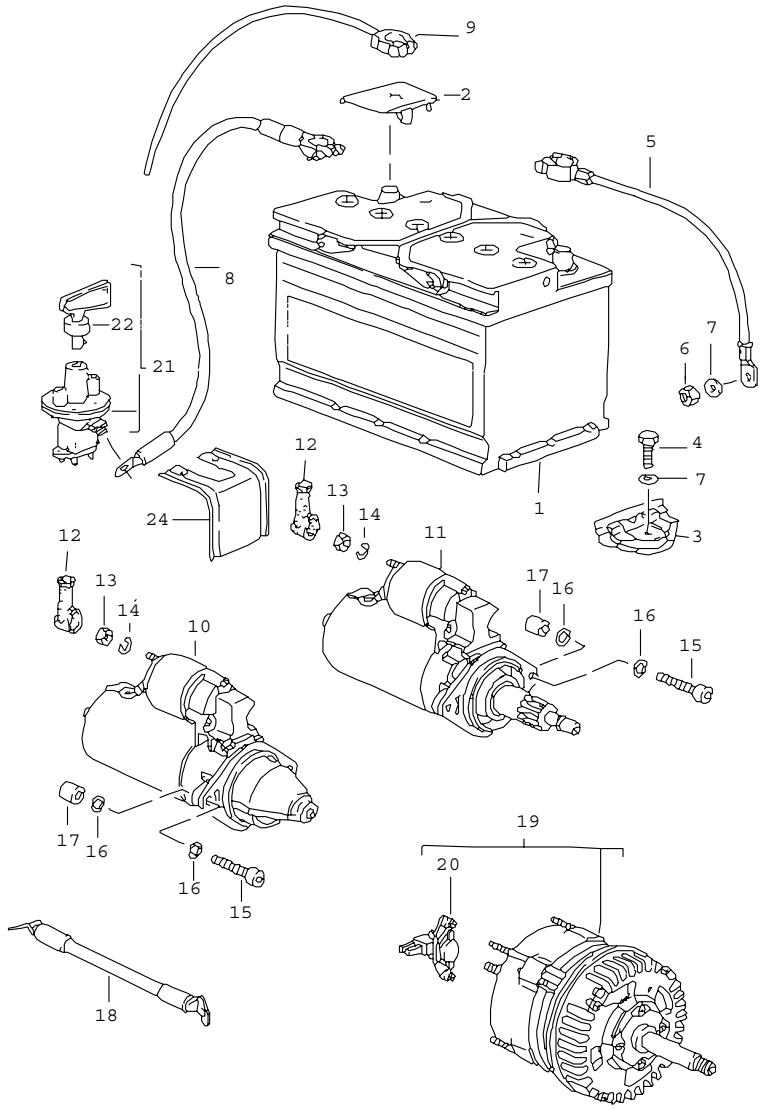

Pos	Part Number	Name	Remarks	Qty	Model
		battery starter generator			
1	999 611 070 20	battery 75 AH electronic mail 02/97		1	
(1)	999 611 036 20	battery 36 AH		1	CARRERA RS
2	999 611 104 00	pole covering		1	
3	964 611 209 01	bracket		1	
4	900 075 078 02	hexagon-head bolt M 8 X 15		1	
5	964 611 799 00	ground cable		1	
6	900 076 030 02	hexagon nut M 8 X 1		1	
7	900 025 025 02	washer 8,4		1	
8	964 612 021 70	cable		1	CARRERA RS
(9)	964 612 022 03	battery-starter cable	/LL	1	
(9)	964 612 022 75	battery-starter cable	/LL	1	CARRERA RS
(9)	964 612 022 01	battery-starter cable	/RL	1	
(9)	964 612 022 76	battery-starter cable	/RL	1	CARRERA RS
10	911 604 102 01	starter	89 90-	1	M 64.01 M 64.02
11	A 964 604 104 00	starter	90-	1	M 64.01/03
11	996 604 107 00	starter	90-	1	M 64.01/03
11	> 965 604 104 00	starter		1	M 30.69 M 64.50
12	999 659 006 50	protection cap		1	
13	900 076 025 02	hexagon nut M 8		1	
14	N 012 009 3	lock ring B 8		1	
15	900 067 124 02	hexagon socket head bolt M 10X35		2	

Pos	Part Number	Name	Remarks	Qty	Model
16	900 031 005 02	washer 10,5		4	
17	901 104 382 02	nut		2	
18	964 612 609 01	ground cable		1	
19	> 964 603 156 01	generator		1	
20	928 603 142 00	regulator		1	
21	944 612 927 00	battery main switch		1	CARRERA RS
22	944 612 945 00	key		1	CARRERA RS
23	964 612 021 70	cable		1	CARRERA RS
24	964 613 126 75	cap for battery main switch		1	
		- -- E N D -- -			

Pos	Part Number	Name	Remarks	Qty	Model

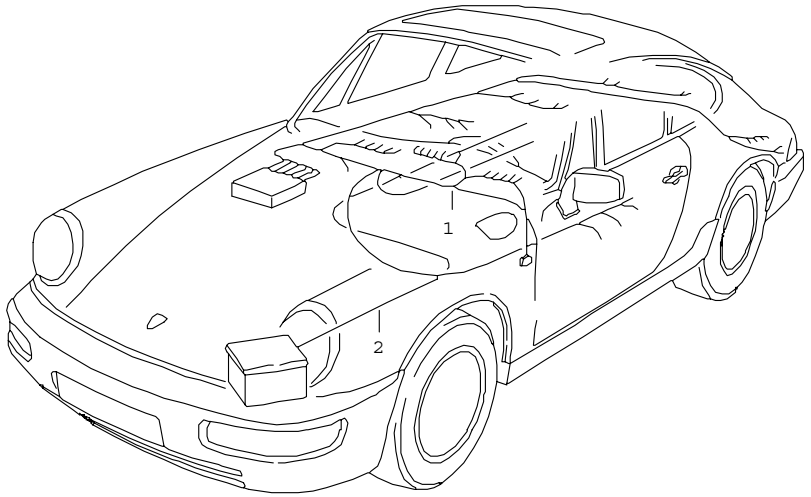

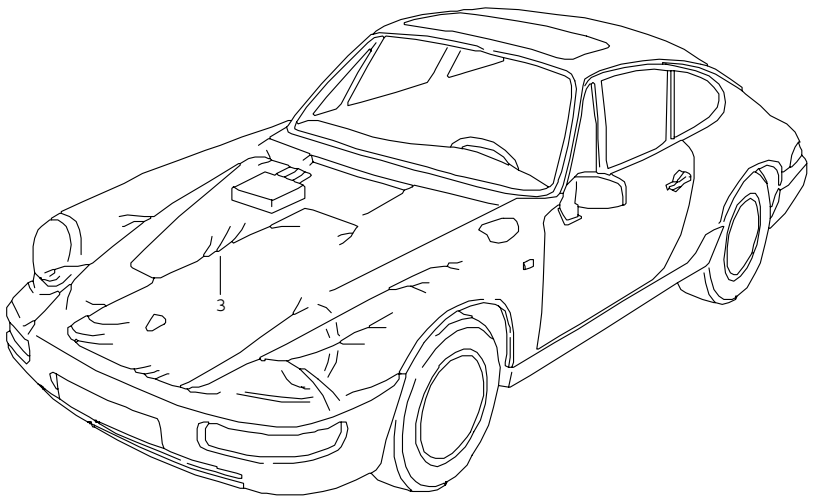

Pos	Part Number	Name	Remarks	Qty	Model
		harnesses passenger compartment starter battery front trunk			
1	964 612 002 06	wiring harness NR. 2 passenger compartment	/LL 89	1	CARRERA 4
1	964 612 002 12	wiring harness NR. 2 passenger compartment	/LL 90	1	CARRERA 4
1	964 612 002 17	wiring harness NR. 2 passenger compartment	/LL 91	1	CARRERA 4
1	964 612 002 20	wiring harness NR. 2 passenger compartment	/LL 92	1	CARRERA 4
1	964 612 002 24	wiring harness NR. 2 10391	/LL 93-	1	CARRERA 4
1	964 612 060 00	wiring harness NR.60 passenger compartment	/RL 89	1	CARRERA 4
1	964 612 060 01	wiring harness NR.60 passenger compartment	/RL 90	1	CARRERA 4
1	964 612 060 05	wiring harness NR.60 passenger compartment	/RL 91	1	CARRERA 4
1	964 612 060 08	wiring harness NR.60 passenger compartment	/RL 92	1	CARRERA 4
1	964 612 060 12	wiring harness NR.60 passenger compartment	/RL 93	1	CARRERA 4
1	964 612 002 16	wiring harness NR. 2 passenger compartment	/LL 90	1	CARRERA 2 M 573,439, M 249
1	964 612 002 16	wiring harness NR. 2 passenger compartment	/LL 90	1	CARRERA 2
1	964 612 002 23	wiring harness NR. 2 passenger compartment	/LL 91	1	CARRERA 2

Pos	Part Number	Name	Remarks	Qty	Model
1	964 612 002 22	wiring harness NR. 2 passenger compartment	/LL 92 /LL	1	CARRERA 2 CARRERA RS M 002
1	964 612 002 26	passenger compartment NR. 2 passenger compartment	/LL 93-	1	CARRERA 2
1	964 612 002 18	wiring harness NR. 2 passenger compartment	/LL 91	1	CARRERA 2 M 249
1	964 612 002 21	wiring harness NR. 2 passenger compartment	/LL 92	1	CARRERA 2 M 249
1	964 612 002 25	wiring harness NR. 2	93-	1	CARRERA 2 M 249
1	964 612 060 04	wiring harness NR.60 passenger compartment	/RL 90	1	CARRERA 2
1	964 612 060 03	wiring harness NR.60 passenger compartment	/RL 90	1	CARRERA 2 (J)
1	964 612 060 11	wiring harness NR.60 passenger compartment	/RL 91	1	CARRERA 2
1	964 612 060 10	wiring harness NR.60 passenger compartment	/RL 92	1	CARRERA 2
1	964 612 060 14	wiring harness NR.60 passenger compartment	/RL 93	1	CARRERA 2
1	964 612 060 75	wiring harness NR.60 passenger compartment	/RL	1	CARRERA RS M 002
1	964 612 060 04	wiring harness NR.60 passenger compartment	/RL 90	1	CARRERA 2 M 249
1	964 612 060 06	wiring harness NR.60 passenger compartment	/RL 91	1	CARRERA 2 M 249
1	964 612 060 09	wiring harness NR.60 passenger compartment	/RL 92	1	CARRERA 2 M 249
1	964 612 060 13	wiring harness NR.60 passenger compartment	/RL 93-	1	CARRERA 2 M 249
1	965 612 002 01	wiring harness NR. 2 passenger compartment	/LL 91	1	TURBO
1	965 612 002 02	wiring harness NR. 2 passenger compartment	/LL 92	1	TURBO
1	965 612 002 03	wiring harness NR. 2 passenger compartment	/LL 93-	1	TURBO
1	965 612 060 00	wiring harness NR.60 passenger compartment	/RL 91	1	TURBO
1	965 612 060 01	wiring harness NR.60 passenger compartment	/RL 92	1	TURBO
1	965 612 060 02	wiring harness NR.60 passenger compartment	/RL 93-	1	TURBO
-	999 652 546 40	socket for diagnostic		1	
-	999 652 553 22	cylindrical connector for 999.652.546.40		X	
-	964 612 501 00	joint flange for wiring harness passenger compartment		1	
2	964 612 022 03	battery-starter cable NR.22 starter battery	/LL	1	
2	964 612 022 04	battery-starter cable NR.22 starter battery	/LL	1 1	M 249
2	964 612 022 01	wiring harness NR.22 starter battery	/RL	1	
2	964 612 022 76	wiring harness NR. 22 starter battery		1	CARRERA RS M 002

Pos	Part Number	Name	Remarks	Qty	Model
3	964 612 003 07	wiring harness NR. 3 boot floor plate	/LL 89	1	
3	964 612 003 10	wiring harness NR. 3 boot floor plate	/LL 90	1	CARRERA 4
3	964 612 003 17	wiring harness NR. 3 boot floor plate	/LL 91	1	CARRERA 4
3	964 612 003 18	wiring harness NR. 3 boot floor plate	/LL 92	1	CARRERA 4
3	964 612 003 21	wiring harness NR. 3 boot floor plate	/LL 93-	1	CARRERA 4
3	964 612 003 14	wiring harness NR. 3 boot floor plate	/LL -91	1	CARRERA 2
3	964 612 003 19	wiring harness NR. 3 boot floor plate	/LL 92	1	CARRERA 2
3	964 612 003 22	wiring harness NR. 3 boot floor plate	/LL 93-	1	CARRERA 2
3	965 612 003 01	wiring harness NR. 3 boot floor plate	/LL 91	1	TURBO
3	965 612 003 02	wiring harness NR. 3 boot floor plate	/LL 92	1	TURBO
3	965 612 003 03	wiring harness NR. 3 boot floor plate	/LL 93-	1	TURBO
3	964 612 003 20	wiring harness NR. 3 boot floor plate	/LL 92 /LL	1	TURBO-LOOK CARRERA RS M 002
3	964 612 003 23	wiring harness NR. 3 boot floor plate	/LL 93-	1	TURBO-LOOK
3	964 612 063 00	wiring harness NR.63 boot floor plate	/RL 89	1	CARRERA 4
3	964 612 063 02	wiring harness NR.63 boot floor plate	/RL 90	1	CARRERA 4
3	964 612 063 07	wiring harness NR.63 boot floor plate	/RL 91	1	CARRERA 4
3	964 612 063 08	wiring harness NR.63 boot floor plate	/RL 92	1	CARRERA 4
3	964 612 063 11	wiring harness NR.63 boot floor plate	/RL 93	1	CARRERA 4
3	964 612 063 06	wiring harness NR.63 boot floor plate	/RL -91	1	CARRERA 2
3	964 612 063 09	wiring harness NR.63 boot floor plate	/RL 92	1	CARRERA 2
3	964 612 063 12	wiring harness NR.63 boot floor plate	/RL 93-	1	CARRERA 2
3	965 612 063 00	wiring harness NR.63 boot floor plate	/RL 91	1	TURBO
3	965 612 063 01	wiring harness NR.63 boot floor plate	/RL 92	1	TURBO
3	965 612 063 02	wiring harness NR.63 boot floor plate	/RL 93-	1	TURBO
3	964 612 063 10	wiring harness NR.63 boot floor plate	/RL 92 /RL	1	TURBO-LOOK CARRERA RS M 002
3	964 612 063 13	wiring harness NR.63 boot floor plate	/RL 93	1	TURBO-LOOK

- -- E N D -- -

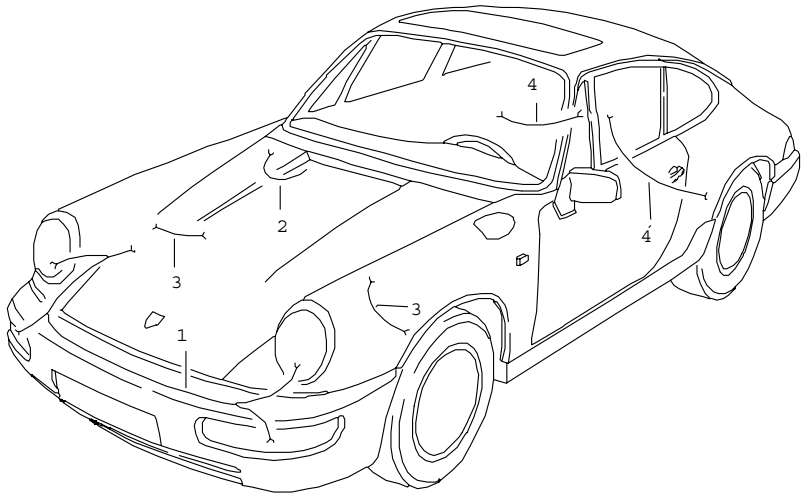

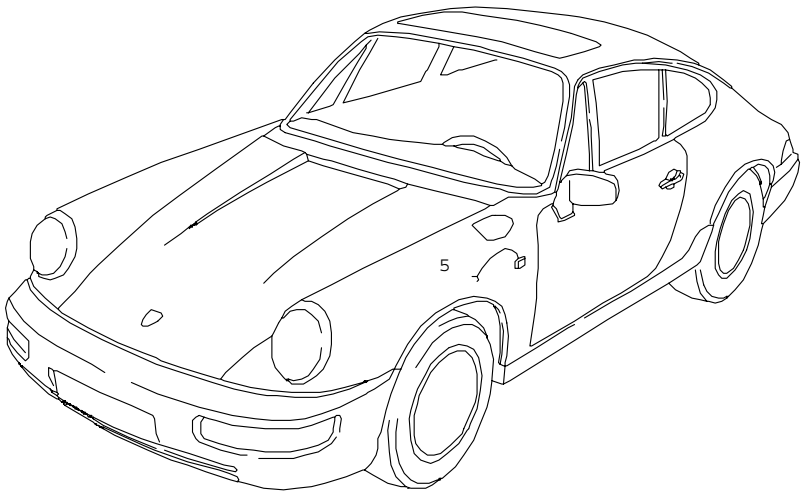

Pos	Part Number	Name	Remarks	Qty	Model
		harnesses headlamp anti-lock brake system			
1	964 612 004 00	wiring harness NR. 4 headlamp		1	
2	911 612 044 21	wiring harness NR. 44 luggage boot lamp		1	
3	964 612 184 00	wiring harness anti-lock brake system brake pad wear indicator	/V -92	2	
3	964 612 184 01	wiring harness anti-lock brake system brake pad wear indicator	/V 93-	2	
4	964 612 185 00	wiring harness anti-lock brake system brake pad wear indicator	/H -92	2	
4	964 612 185 01	wiring harness anti-lock brake system brake pad wear indicator use also:	/H 93-	2	
-	964 612 984 00	assembly kit anti-lock brake system brake pad wear indicator	93-	1	
5	911 612 177 02	wiring harness NR. 177		2	
		- -- E N D -- -			

Model	Year	MG	SG	Illustration	Restrictions	Update	18:19	24.11.2005	PORSCHE PET PORSCHE
964	94	9	02	902-14		194			

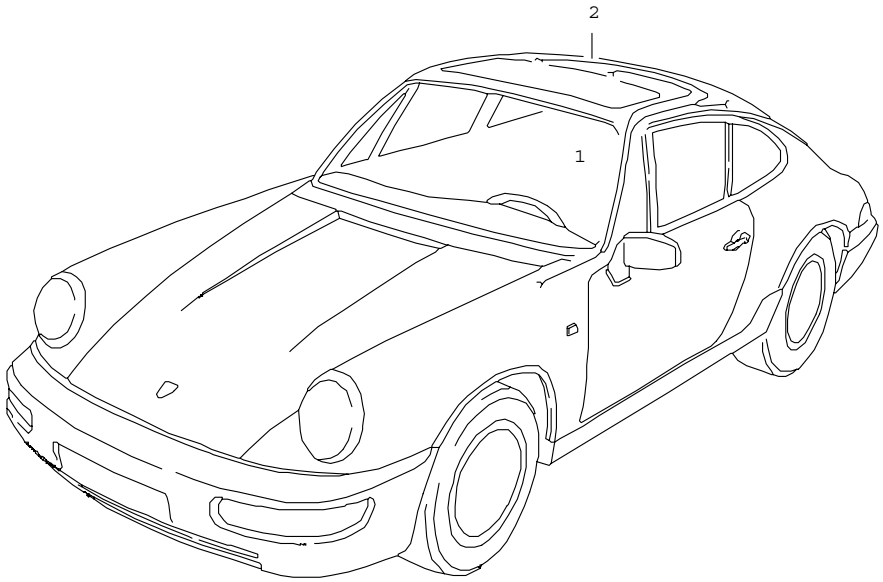

Pos	Part Number	Name	Remarks	Qty	Model
		harnesses passenger compartment			
1	964 612 034 00	wiring harness NR. 34 sunroof		1	M 650
2	964 612 034 00	wiring harness NR. 34 interior light		1	
		- -- E N D -- -			

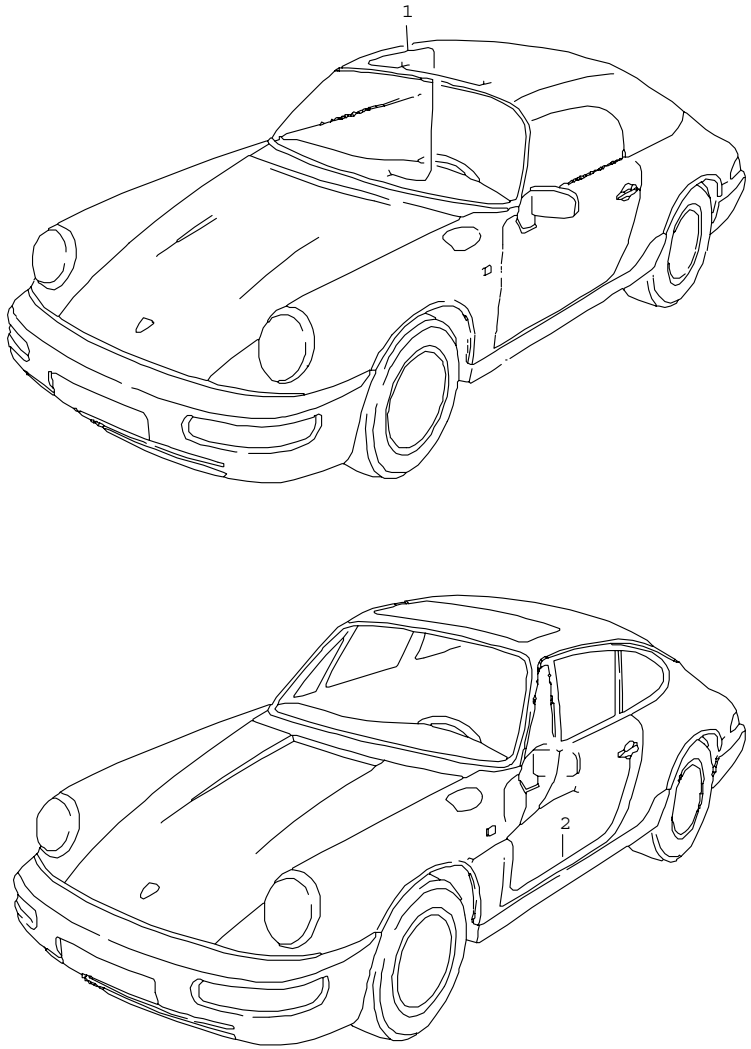

Pos	Part Number	Name	Remarks	Qty	Model
		harnesses folding top control driver's door passenger's door			
1	993 612 563 00	wiring harness NR. 563 folding top control		1	
2	964 612 165 01	wiring harness NR. 165 driver's door	/LL -90	1	
2	964 612 165 03	wiring harness NR. 165 driver's door	/RL -90	1	
2	964 612 165 05	wiring harness NR. 165 driver's door	/LL -90	1	M 659
2	964 612 165 13	wiring harness NR. 165 driver's door	/LL 91	1	
2	965 612 165 00	wiring harness NR. 165 driver's door	/LL	1	TURBO
2	964 612 165 06	wiring harness NR. 165 driver's door	/RL -90	1	M 659
2	964 612 165 14	wiring harness NR. 165 driver's door	/RL 91	1	
2	965 612 165 01	wiring harness NR. 165 driver's door	/RL	1	TURBO
2	964 612 165 17	wiring harness NR. 165 driver's door	92	1	
2	964 612 165 18	wiring harness NR. 165 driver's door	93-	1	
(2)	964 612 166 01	wiring harness NR. 166 passenger's door	/LL -90	1	
(2)	964 612 166 07	wiring harness NR. 166 passenger's door	/LL 91	1	

Pos	Part Number	Name	Remarks	Qty	Model
(2)	965 612 166 00	wiring harness NR. 166 passenger's door	/LL 91	1	TURBO
(2)	964 612 166 03	wiring harness NR. 166 passenger's door	/RL -90	1	
(3)	964 612 166 08	wiring harness NR. 166 passenger's door	/RL 91	1	
(3)	965 612 166 01	wiring harness NR. 166 passenger's door	/RL 91	1	TURBO
(3)	964 612 166 09	wiring harness NR. 166 passenger's door	92	1	
(3)	964 612 166 10	wiring harness NR. 166 passenger's door	93-	1	
-	964 612 334 00	rubber sleeve		2	
		- -- E N D -- -			

Pos	Part Number	Name	Remarks	Qty	Model

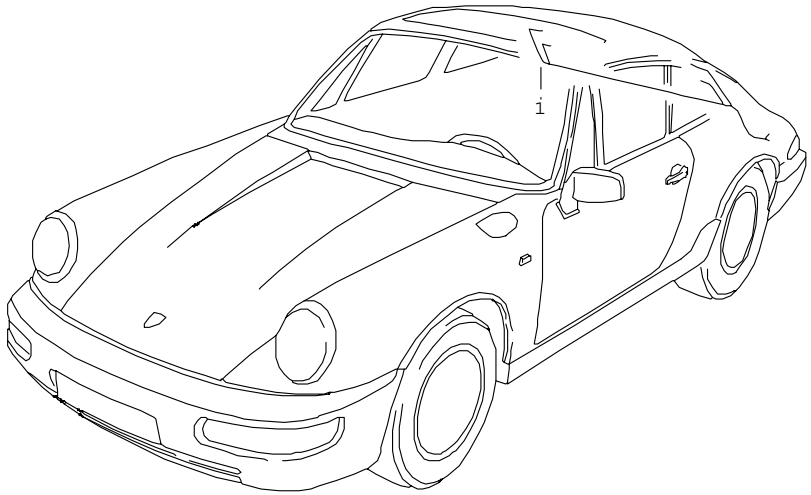

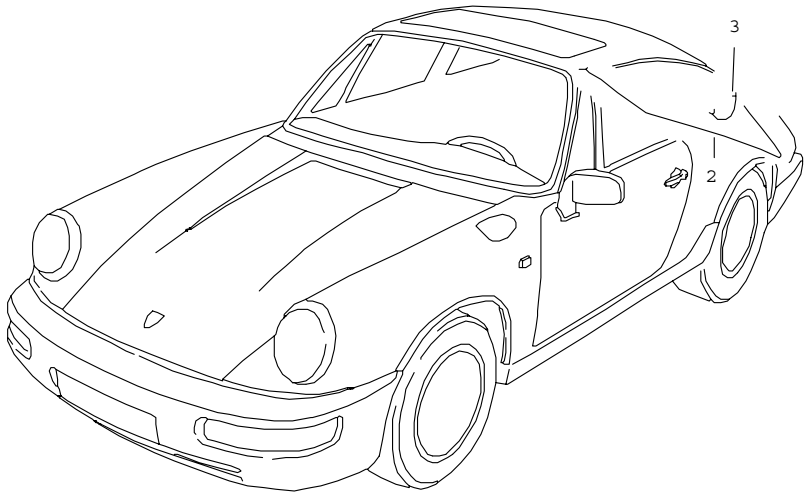

Pos	Part Number	Name	Remarks	Qty	Model
		harnesses rear end			
1	964 612 032 00	wiring harness NR. 32 rear window heating		1	COUPE
1	964 612 032 01	wiring harness NR. 32 rear window heating		1	COUPE M 602
1	964 612 032 03	wiring harness NR. 32 rear window heating		1	TARGA
(1)	964 612 035 01	wiring harness NR. 35 rear wall		1	
2	964 612 049 00	wiring harness NR. 49 rear spoiler with switch	89	1	
2	964 612 049 03	wiring harness NR. 49 rear spoiler	-91	1	
2	964 612 049 05	wiring harness NR. 49 rear spoiler	92-	1	
(2)	965 612 049 02	wiring harness engine compartment lamp	91	1	TURBO
(2)	965 612 049 03	wiring harness engine compartment lamp	92-	1	TURBO
3	964 612 110 00	ground strap for bonnet		2	
		- -- E N D -- -			

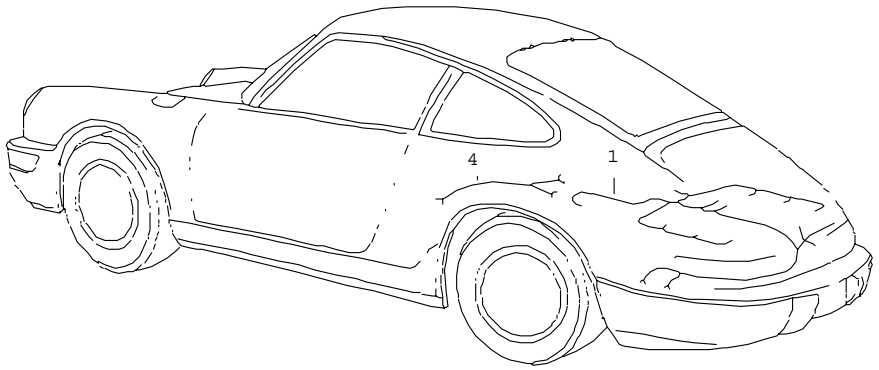

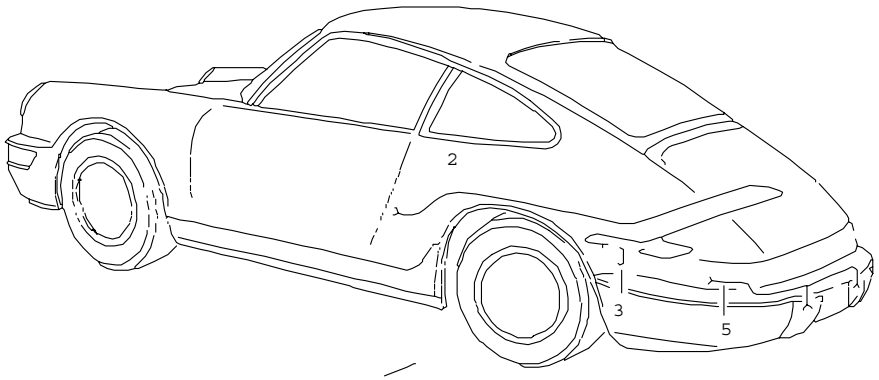

Pos	Part Number	Name	Remarks	Qty	Model
		harnesses engine - dme -			
1	964 607 016 01	wiring harness NR. 16 engine	-90	1	M64.01
1	964 607 016 03	wiring harness NR.16 engine	91-	1	M64.01 M64.03
1	964 607 016 02	wiring harness NR. 16 engine		1	M64.02
1	965 607 016 01	wiring harness NR.16 engine M >> 61M 01764		1	M30.69
1	965 607 016 02	wiring harness NR.16 engine M 61M 01765 >>		1	M30.69
1	965 607 016 03	wiring harness NR.16 engine		1	M64.50
2	964 612 173 02	wiring harness NR. 173 - dme -	89	1	M 481
2	964 612 173 04	wiring harness NR. 173 - dme -	90-	1	M 481
2	964 612 173 03	wiring harness NR. 173 - dme -	-91	1	M 249
2	964 612 173 06	wiring harness NR. 173 - dme -	92-	1	M 249
2	964 612 173 75	wiring harness NR. 173 - dme -		1	M 64.03
-	000 043 202 74	repair kit for connector mass air flow		1	

Pos	Part Number	Name	Remarks	Qty	Model
(2)	965 612 173 01	wiring harness o2 sensor closed-loop ctrl M >> 61M 01764		1	TURBO
(2)	965 612 173 02	wiring harness o2 sensor closed-loop ctrl M 61M 01765 >>	-92	1	TURBO
(2)	965 612 173 03	wiring harness o2 sensor closed-loop ctrl	93-	1	TURBO 3,6
3	911 612 422 00	adapter plug		1	M 150
4	964 612 012 01	wiring harness NR.12 automatic transmission	-91	1	M 249
4	964 612 012 02	wiring harness NR.12 automatic transmission	92	1	
4	964 612 012 03	wiring harness NR.12 automatic transmission	93-	1	
5	964 612 018 00	wiring harness license plate light		1	
-	964 612 620 00	cap license plate light		2	
(5)	964 612 018 75	wiring harness license plate light		1	TURBO 3,6 CARRERA RS M 002
		- -- E N D -- -			

Pos	Part Number	Name	Remarks	Qty	Model

Model	Year	MG	SG	Illustration	Restrictions	Update		
964	94	9	02	902-50		194	18:20	24.11.2005

Pos	Part Number	Name	Remarks	Qty	Model
		round connector contact pin cable shoe			
1	N 017 586 2	round connector $ 0,5 - 1,0 CUZN		X	
2	944 612 428 00	round connector $ 0,75 - 1,5 CUSN		X	
3	N 017 564 1	round connector $ 0,5 - 1,0 CUSN		X	
4	N 017 562 4	cylindrical connector $ 0,5 - 1,0 CUSN		X	
6	N 017 599 4	cylindrical connector $ 2,5 - 6,0 CUSN		X	
7	944 612 427 00	contact bush $ 0,75 - 1,5 CUSN		X	
8	999 652 369 12	pin $ 0,5 - 2,0 CUAG		X	
9	911 612 907 00	contact pin $ 0,5 - 2,0 CUAG		X	
10	944 612 548 00	contact bush $ 0,5 - 2,0 CUAG		X	
11	999 652 351 22	contact bush $ 0,5 - 2,0 CUAG		X	
12	999 652 371 12	bush $ 0,5 - 2,0 CUAG		X	
13	N 017 505 4	cable shoe $ 5,0 - 1,0		X	
(13)	N 017 515 4	cable shoe $ 5,0 - 2,5		X	
(13)	N 017 516 2	cable shoe $ 6,0 - 2,5		X	

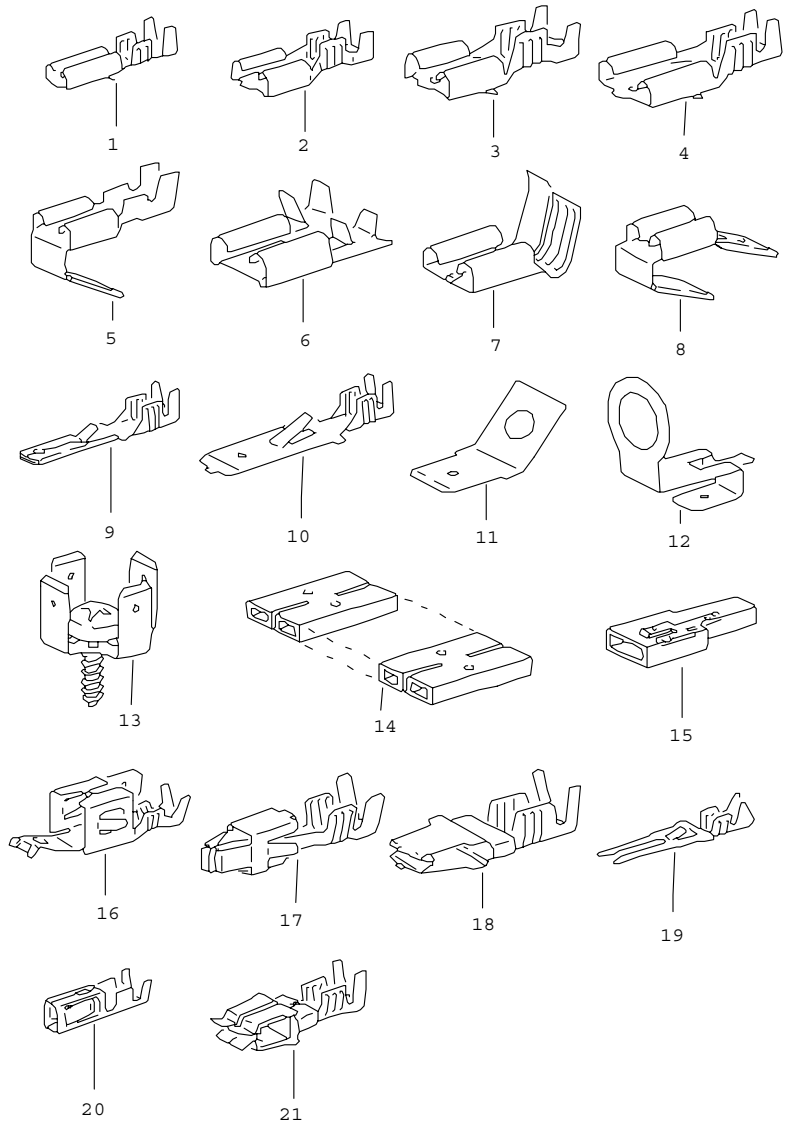

Pos	Part Number	Name	Remarks	Qty	Model
		flat plug push-on connector			
1	111 971 958	flat receptacle with clips 2,8 X 1		X	
(1)	111 971 958	flat receptacle without clips 2,8 X 1 CUZN		X	
(1)	111 971 958	flat receptacle without clips 2,8 X 1 CUSN		X	
(1)	N 017 243 1	flat receptacle without clips 2,8 X 1,5 CUZN		X	
2	111 971 959	flat receptacle with clips 6,3 X 1 CUZN		X	
2	111 971 959	flat receptacle with clips 6,3 X 1 CUSN		X	
2	N 017 491 8	flat receptacle with clips 6,3 X 2,5 CUZN		X	
2	N 017 494 3	flat receptacle with clips 6,3 X 6,0 CUSN		X	
(2)	111 971 959	flat receptacle without clips 6,3 X 1 CUZN		X	
(2)	999 652 106 02	flat receptacle without clips 6,3 X 1,5 CUSN		X	
(2)	999 652 106 02	flat receptacle without clips 6,3 X 1,5 CUZN		X	

Pos	Part Number	Name	Remarks	Qty	Model
(2)	N 017 491 8	flat receptacle without clips 6,3 X 2,5 CUZN		X	
(2)	N 017 494 3	flat receptacle without clips 6,3 X 6,0 CUZN		X	
3	N 017 453 1	flat receptacle without clips 7,7 X 2,5 CUZN		X	
3	N 017 245 1	flat receptacle without clips 7,7 X 10 CUSN		X	
5	N 017 242 1	flat receptacle with push-on connector 6,3 X 1		X	
6	N 017 498 2	flat receptacle 6,3 X 1		X	
7	999 652 116 02	flat receptacle 6,3 X 1,5		X	
8	999 652 122 10	multiple plug connector 6,3		X	
9	N 017 457 2	flat plug with clips 2,8 X 1		X	
10	111 971 985	flat plug with clips 6,3 X 1		X	
10	111 971 986	flat plug with clips 6,3 X 2,5		X	
11	999 652 125 10	flat plug 6,3 $ 2,8		X	
11	999 652 315 02	flat plug 6,3 $ 5,3 CUSN		X	
11	999 652 315 02	flat plug 6,3 $ 5,3 CUZN		X	
(11)	999 652 315 02	flat plug 6,3 $ 5,3 GERADE		X	
12	911 603 911 00	connector 6,3		X	
13	171 971 519 A	ground connector 6,3		X	
14	999 652 142 40	push-on connector 6,3 12-FACH		X	
(14)	999 652 142 40	push-on connector 6,3 5-FACH		X	
(14)	999 652 142 40	push-on connector 6,3 triple		X	
(14)	999 652 142 40	push-on connector 6,3 2-FACH		X	
(14)	999 652 142 40	push-on connector 6,3 1-FACH		X	
15	999 652 151 40	push-on connector 6,3		X	
16	999 652 275 10	contact 6,3		X	
17	N 903 353 03	contact spring $ 2,5 - 3,5		X	
18	999 652 451 22	fitting piece 6,3 $ 0,5 - 1,0		X	
19	999 652 380 12	contact spring $ 0,4 - 0,75		X	
19	477 971 827 B	cable connection 2-FACH		1	
19	477 971 827 B	cable connection 1-FACH		1	
20	999 652 269 12	contact spring		X	
21	999 652 456 22	contact spring $ 0,75 - 1,5		X	
		- -- E N D -- -			

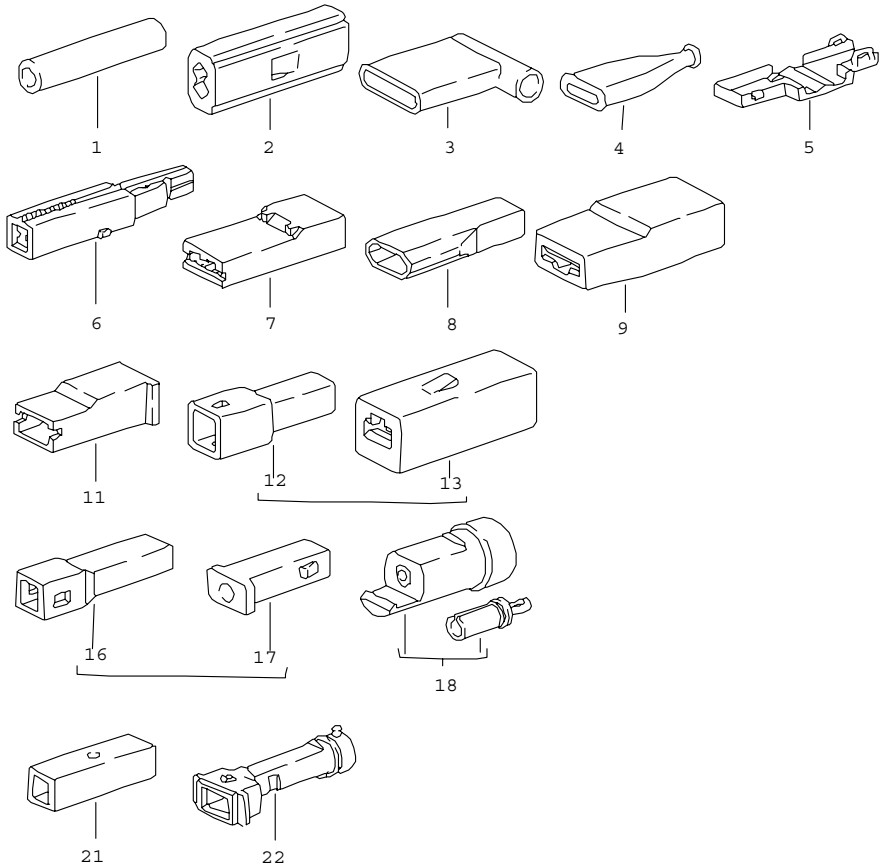

Pos	Part Number	Name	Remarks	Qty	Model
		cable connection connector housing single pole			
1	999 652 149 40	cable connection $ 1,5		X	
2	111 971 921	protection cap 6,3		X	
3	999 652 160 40	protection cap 6,3		X	
5	211 971 921	protection cap 6,3		X	
6	059 905 371	diode connector 6,3		X	
7	111 971 921 B	connector housing 6,3		X	
8	999 652 119 40	connector housing 6,3		X	
9	825 971 990	terminal sleeve housing 6,3		X	
11	431 971 995	terminal sleeve housing 6,3		X	
12	823 971 976	connector housing 2,8		X	
13	823 971 990	terminal sleeve housing 2,8		X	
16	171 971 998	connector housing 1,6		X	
17	171 971 999	terminal sleeve housing 1,6		X	
18	999 653 002 90	connector housing with		X	
-	999 652 371 12	bush		X	
21	111 971 977	plug with guide 6,3		X	
22	813 972 643 A	socket		X	
		- -- E N D -- -			

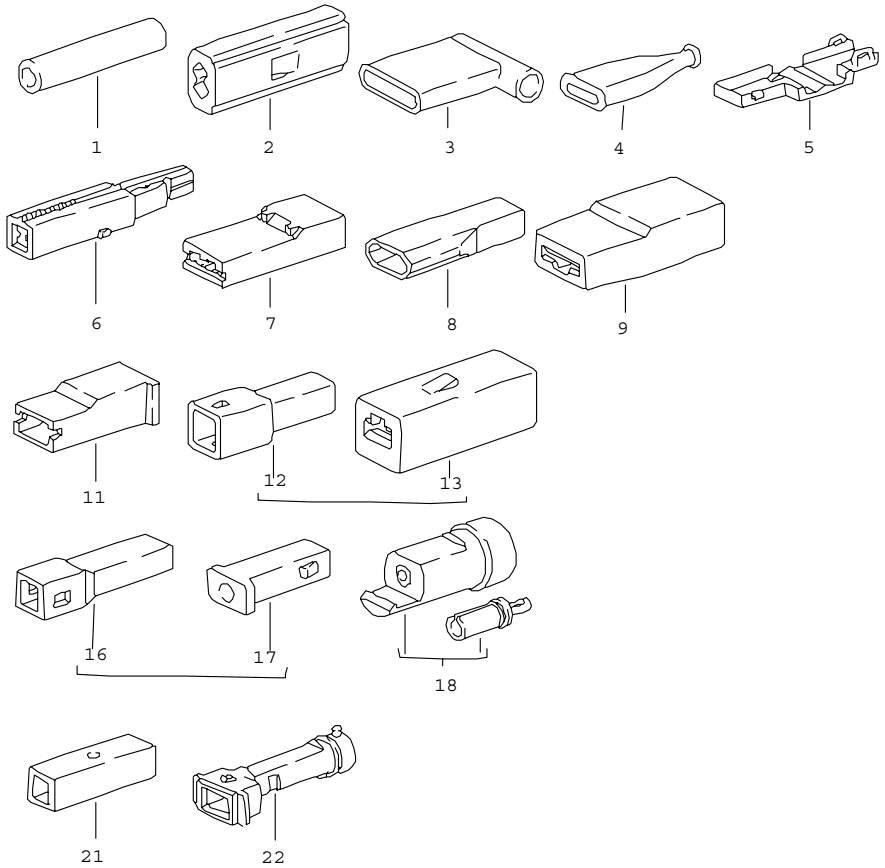

Pos	Part Number	Name	Remarks	Qty	Model
		cable connection connector housing single pole			
1	999 652 149 40	cable connection $ 1,5		X	
2	111 971 921	protection cap 6,3		X	
3	999 652 160 40	protection cap 6,3		X	
5	211 971 921	protection cap 6,3		X	
6	059 905 371	diode connector 6,3		X	
7	111 971 921 B	connector housing 6,3		X	
8	999 652 119 40	connector housing 6,3		X	
9	825 971 990	terminal sleeve housing 6,3		X	
11	431 971 995	terminal sleeve housing 6,3		X	
12	823 971 976	connector housing 2,8		X	
13	823 971 990	terminal sleeve housing 2,8		X	
16	171 971 998	connector housing 1,6		X	
17	171 971 999	terminal sleeve housing 1,6		X	
18	999 653 002 90	connector housing with		X	
-	999 652 371 12	bush		X	
21	111 971 977	plug with guide 6,3		X	
22	813 972 643 A	socket		X	
		- -- E N D -- -			

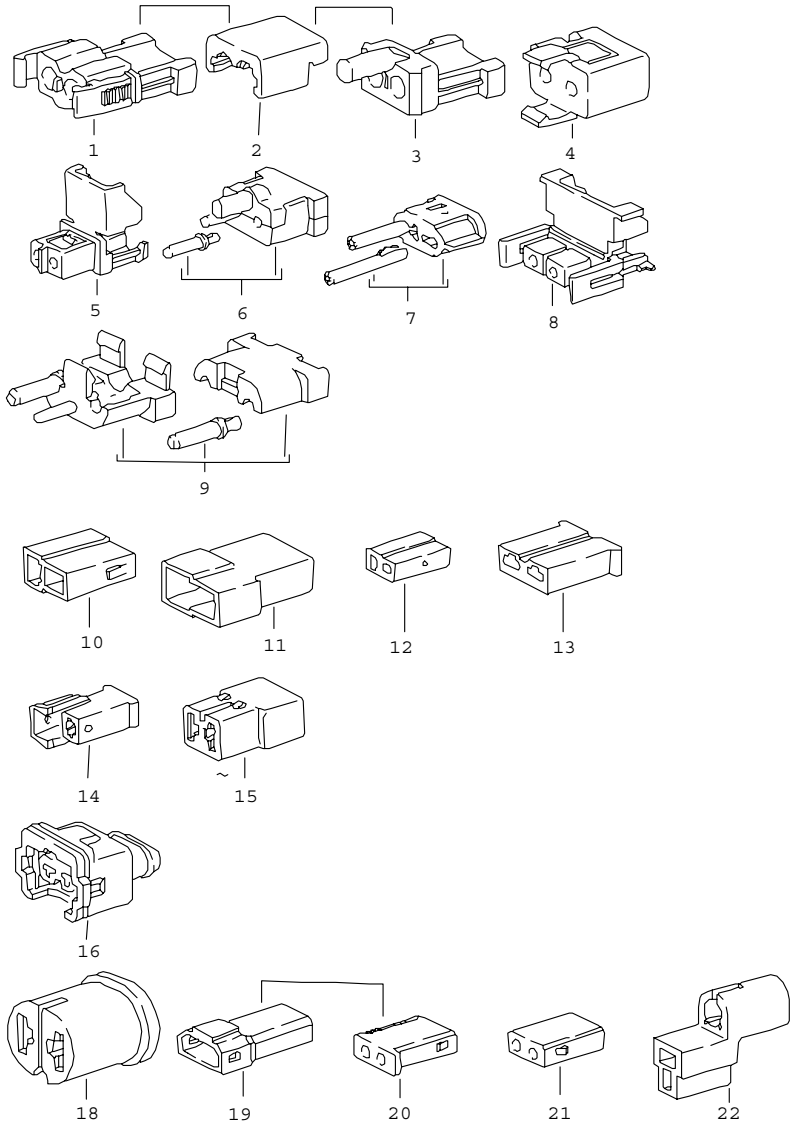

Pos	Part Number	Name	Remarks	Qty	Model
		connector housing 2-pole			
1	999 652 370 40	connector housing for		X	
-	999 652 371 12	bush		X	
2	999 652 372 40	clip		X	
3	999 652 368 40	connector housing for		X	
-	999 652 369 12	pin		X	
4	911 612 887 00	connector housing for		X	
-	999 652 351 22	contact bush		X	
5	928 612 557 00	connector housing for		X	
-	944 612 548 00	contact bush		X	
6	999 652 381 00	connector housing with		X	
		contact bush		2	
7	911 645 112 00	adapter plug with		1	
		contact pin		2	
8	944 612 547 00	connector housing for		X	
-	944 612 548 00	contact bush		X	
9	911 612 118 00	connector housing with		X	
		contact bush		2	
10	815 971 989 A	connector housing 6,3		X	
11	815 971 988 A	connector housing 6,3		X	
12	810 971 989	connector housing 6,3		X	
13	171 906 231	connector housing 6,3		X	
14	171 971 934	connector housing 6,3		X	

Pos	Part Number	Name	Remarks	Qty	Model	Pos	Part Number	Name	Remarks	Qty	Model
15	815 971 989	connector housing 6,3		X							
16	022 906 231 A	connector housing grey for		X							
-	N 903 353 03	contact spring		X							
16	928 612 825 00	connector housing beige		X							
18	810 971 993	terminal sleeve housing		X							
19	171 971 998 A	terminal sleeve housing 1,6		X							
20	171 971 999 A	connector housing 1,6		X							
21	171 971 999 A	terminal sleeve housing 1,6		X							
22	944 612 439 00	connector housing for cigarette lighter		X							
		- -- E N D -- -									

Model	Year	MG	SG	Illustration	Restrictions	Update	18:21	24.11.2005	PORSCHE PET PORSCHE
964	94	9	02	902-58		194			

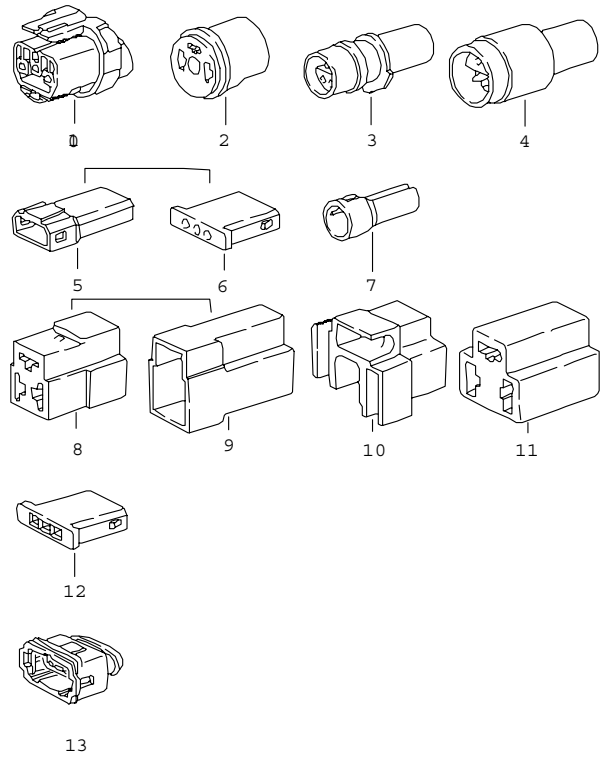

Pos	Part Number	Name	Remarks	Qty	Model
		connector housing 3-pole			
1	165 941 165	connector housing 3,5		X	
2	113 945 525	terminal sleeve housing 6,3		X	
3	944 612 436 00	connector for		X	
4	944 612 435 00	connector housing for		X	
5	171 971 998 B	connector housing 1,6		X	
6	171 971 999 B	terminal sleeve housing 1,6		X	
7	113 919 113	connector housing 1,6		X	
8	821 971 970	connector housing 6,3		X	
9	821 971 975	terminal sleeve housing 6,3		X	
10	111 941 341	terminal sleeve housing 6,3		X	
11	914 612 327 10	connector housing 6,3		X	
12	311 906 231 B	connector housing		X	
13	022 906 233 B	connector housing		X	
		- -- E N D -- -			

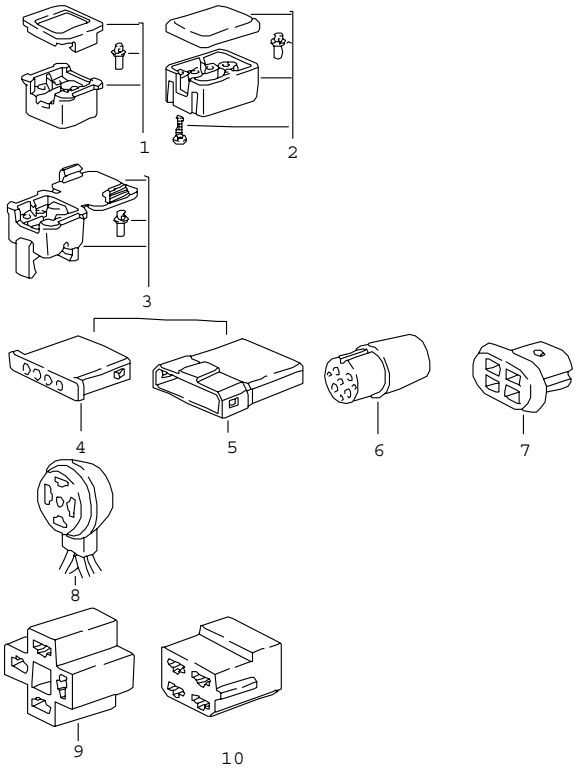

Pos	Part Number	Name	Remarks	Qty	Model
		connector housing 4-pole			
1	901 612 891 01	connector housing with		X	
-	999 652 371 12	bush		3	
2	901 612 891 00	connector housing with		X	
-	999 652 371 12	bush		4	
3	944 612 217 00	connector housing for		X	
-	999 652 351 22	contact bush		X	
4	171 971 999 C	connector housing 1,6		X	
5	171 971 998 C	terminal sleeve housing 1,6		X	
6	914 612 325 00	plug socket 1,6		X	
7	928 612 131 00	connector housing		X	
8	901 612 334 00	socket		X	
9	928 631 108 00	connector housing 6,3		X	
10	803 905 897	connector housing 6,3		X	
		- -- E N D -- -			

Model	Year	MG	SG	Illustration	Restrictions	Update	18:21	24.11.2005	PORSCHE PET PORSCHE
964	94	9	02	902-62		194			

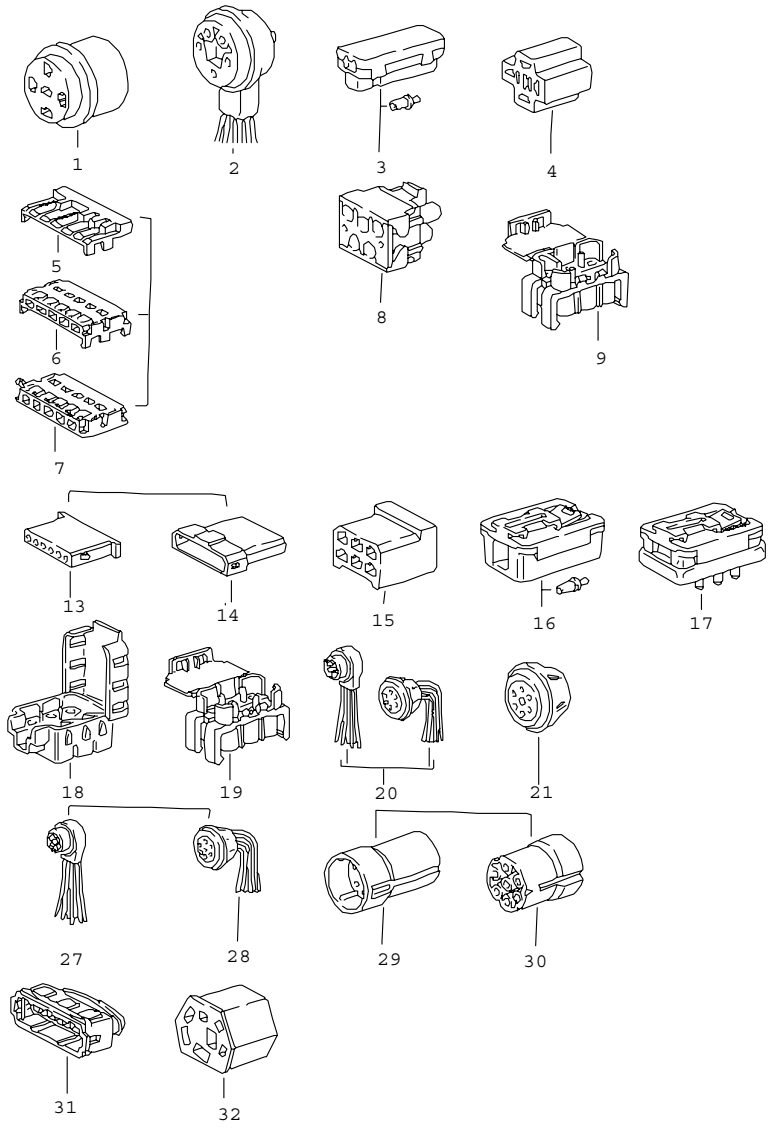

Pos	Part Number	Name	Remarks	Qty	Model
		connector housing 5-pole 6-pole 7-pole			
		5-pole			
1	113 971 835	terminal sleeve housing 2,8		X	
2	901 612 333 00	socket for standard type relay		X	
3	928 612 411 00	clutch		X	
4	803 971 835 A	terminal sleeve housing for relay		X	
5	928 612 335 25	fitting piece		1	
6	928 612 332 00	module housing for		X	
-	999 652 451 22	fitting piece		X	
7	928 612 331 00	initial housing		X	
8	928 612 542 00	clutch housing		X	
		6-pole			
13	171 971 999 E	connector housing 1,6		X	
14	171 971 998 E	connector housing 1,6		X	
15	803 971 831	terminal sleeve housing 6,3		X	
16	911 612 868 01	clutch with contact bush		X	
(16)	911 612 868 01	clutch		X	
17	911 612 867 02	connector with contact pin with contact bush		X 6	
18	928 612 469 00	clutch for contact pin		X X	

Pos	Part Number	Name	Remarks	Qty	Model	Pos	Part Number	Name	Remarks	Qty	Model
19	944 612 537 00	clutch		X							
20	901 612 330 00	multiple plug connection		X							
21	901 612 061 00	clutch		X							
		7-pole									
27	911 612 332 00	socket		X							
28	911 612 331 00	connector		X							
29	803 971 980	connector		X							
		for									
		contact pin		1							
		$ 3,5									
		for									
		contact pin		6							
		$ 1,6									
30	803 971 979	plug socket		X							
		for									
		contact bush		1							
		$ 3,5									
		for									
		contact bush		6							
		1,6									
31	071 906 233	terminal sleeve housing		X							
		for									
		flat connector		X							
32	111 953 631	terminal sleeve housing		X							
		2,8 / 6,3									
		- -- E N D -- -									

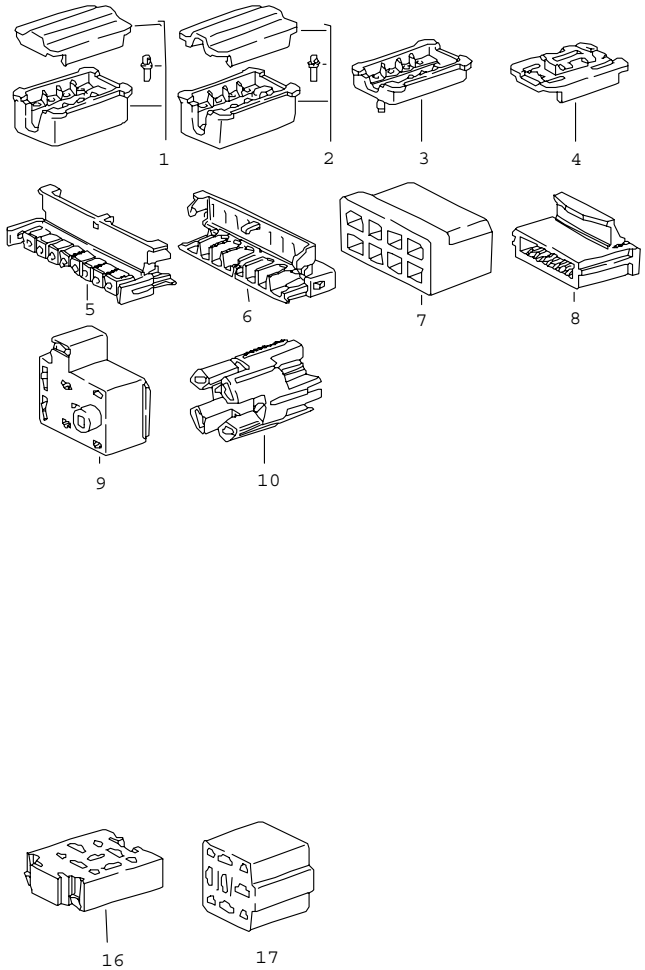

Pos	Part Number	Name	Remarks	Qty	Model
		connector housing 8-pole 9-pole			
		8-pole			
1	944 612 117 00	connector housing with		X	
-	999 652 371 12	bush		8	
2	928 612 117 01	connector housing with		X	
-	999 652 371 12	bush		8	
3	999 652 395 40	connector housing		X	
4	999 652 396 40	clip		X	
5	944 612 554 00	connector housing for		X	
-	944 612 548 00	contact bush		X	
6	944 612 553 00	connector housing		X	
7	803 971 971	connector housing 6,3		X	
8	113 971 998 B	connector housing		X	
9	321 971 999 A	terminal sleeve housing 2,8 / 6,3		X	
10	911 612 120 00	connector housing 6,3		X	
		9-pole			
16	135 937 501 A	terminal sleeve housing 2,8 / 6,3		X	
17	849 941 593	connector housing 2,8 / 6,3		X	
		- -- E N D -- -			

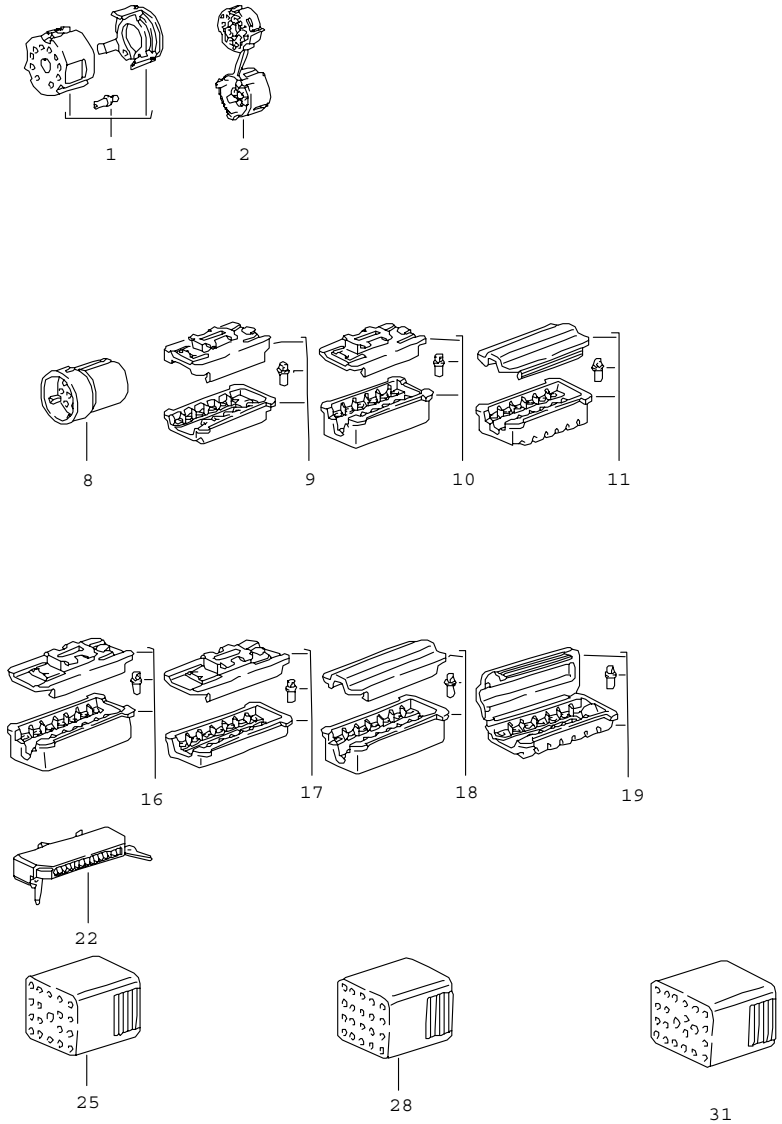

Pos	Part Number	Name	Remarks	Qty	Model
		connector housing 10-pole until 22-pole			
		10-pole			
1	911 612 889 00	connector housing with contact bush		X 10	
2	944 613 531 01	connector housing for		X	
-	944 612 548 00	contact bush for for		10	
		12-pole			
8	861 972 524	connector housing 1,6 / 3,5		X	
9	911 612 122 02	plug socket with contact bush		X 12	
10	928 612 423 00	plug socket		X	
(10)	928 641 610 00	adapter		X	
11	911 612 884 00	connector housing		X	
11	911 612 121 01	connector housing		X	
		14-pole			
16	911 612 115 02	connector housing		X	
17	911 612 113 05	connector housing		X	
18	911 612 115 03	connector housing		X	
19	944 612 215 00	connector housing with contact bush		X 14	
		17-pole			
22	944 612 311 00	connector housing for		X	
-	999 652 380 12	contact spring		X	
		19-pole			
25	171 971 971 C	connector housing beige		X	

Pos	Part Number	Name	Remarks	Qty	Model	Pos	Part Number	Name	Remarks	Qty	Model
(25)	171 971 971 E	connector housing white		X							
		20-pole									
28	171 971 971	connector housing yellow		X							
(28)	171 971 971 D	connector housing red		X							
		22-pole									
31	171 971 971 A	connector housing black		X							
(31)	171 971 971 B	connector housing blue		X							
		- -- E N D -- -									

Model	Year	MG	SG	Illustration	Restrictions	Update	18:22	24.11.2005	PORSCHE PET PORSCHE
964	94	9	03	903-00		194			

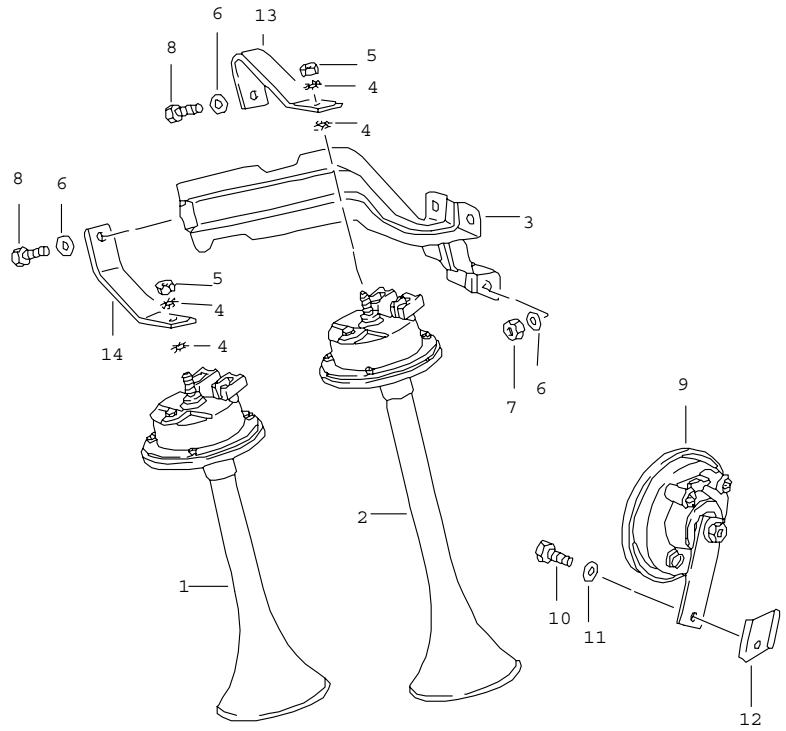

Pos	Part Number	Name	Remarks	Qty	Model
		horn			
1	911 635 101 20	fanfare high-pitched		1	
2	911 635 102 20	fanfare low-pitched		1 1	
3	964 635 031 01	support		1	
4	N 042 121 3	shake-proof washer A 6,4		2	
5	900 076 010 02	hexagon nut M 6		2	
6	N 011 524 7	washer A 6,4		4	
7	900 076 010 02	hexagon nut M 6		1	
8	N 010 215 13	hexagon-head bolt		2	
9	964 637 117 00	horn for alarm system		1	
10	900 075 078 02	hexagon-head bolt		1	
11	900 025 007 02	washer		1	
12	964 637 101 00	torsion protection		1	
13	964 635 103 00	support		1	
14	964 635 113 00	support		1	
		- -- E N D -- -			

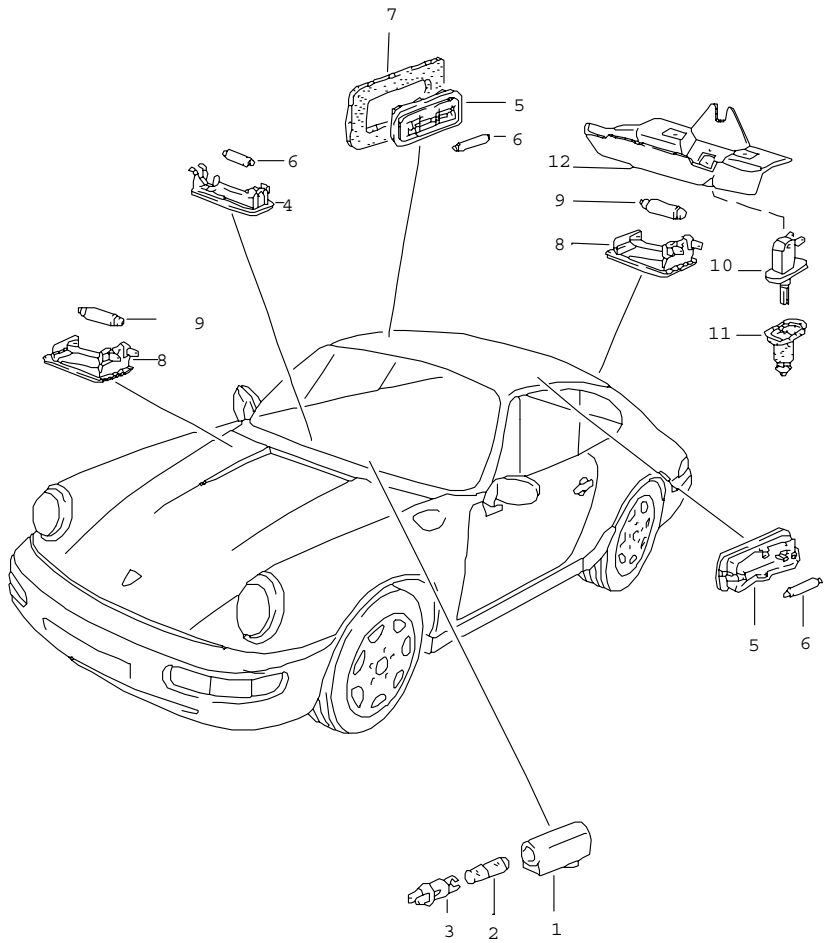

Pos	Part Number	Name	Remarks	Qty	Model
		interior lights luggage boot lamp engine compartment lamp			
1	964 632 113 01	ashtray light		1	
2	900 631 132 90	bulb 1,2 W		1	
3	999 632 014 00	bulb holder 2-pole		1	
4	928 632 101 00	glove compartment light		1	M562
4	928 632 101 00	interior light footwell		2	SPEEDSTER
4	911 632 102 00	light		1	SPEEDSTER
	70A	black footwell			
5	911 632 102 00	light		1	TARGA/CABRIO
	70A	black			
5	901 632 101 28	interior light		2	COUPE
6	900 631 106 90	linolite lamp 10 W		X	
7	964 555 153 00	desk pad		2	COUPE
8	A 959 632 201 00	luggage boot lamp		2	
8	997 632 201 00	luggage boot lamp		2	
9	900 631 106 90	linolite lamp 10 W		1	
10	895 947 561 A	switch		1	TURBO
11	895 947 565	cap		1	TURBO
12	965 632 105 01	support	91	1	TURBO
	01C	satin black			
12	965 632 105 02	support	92-	1	TURBO
	01C	satin black			
		- -- E N D -- -			

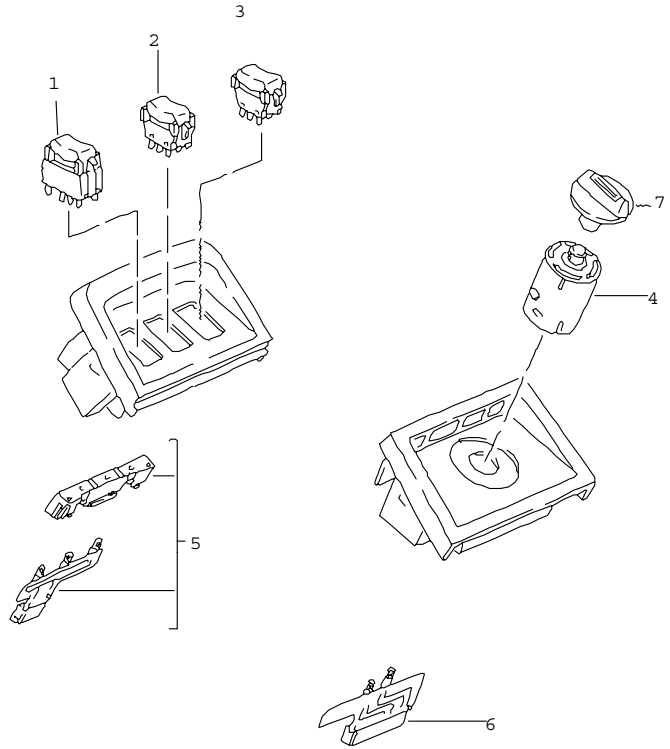

Pos	Part Number	Name	Remarks	Qty	Model
		switch centre console			
1	944 613 235 00	hazard warning light sw.		1	
	01C	satin black			
2	951 613 147 00	switch door latch		1	
3	964 613 202 00	rocker switch		1	
	01C	satin black			
(3)	944 613 259 02	cover		X	CARRERA RS
	1DB	black			
4	964 613 162 00	switch	89	1	CARRERA 4
4	964 613 162 00	switch	90-	2	CARRERA 4
4	964 613 162 00	switch		1	CARRERA 2
5	964 632 130 01	combined lights		1	
6	964 632 162 00	combined lights	89	1	CARRERA 4
6	964 632 162 04	combined lights	90-	1	CARRERA 4
6	964 632 162 03	combined lights		1	CARRERA 2
7	964 613 171 00	knob		2	CARRERA 2/4
	01C	satin black			
		- -- E N D -- -			

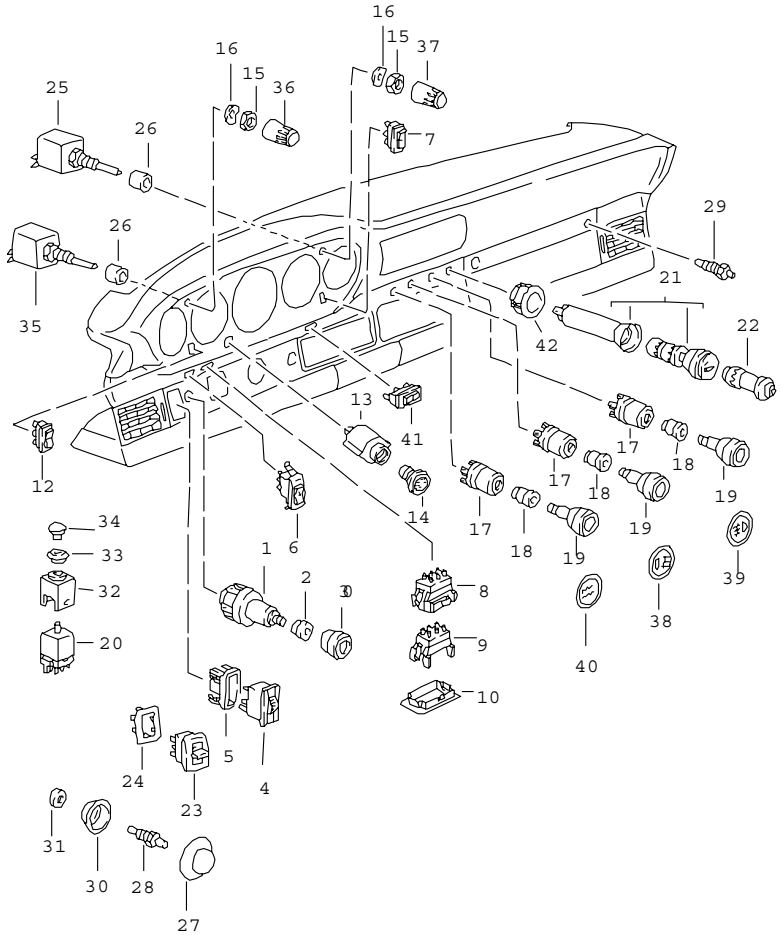

Pos	Part Number	Name	Remarks	Qty	Model
		switch			
1	993 613 531 00	light switch		1	
2	964 613 535 00	rose		1	
	01C	satin black			
3	964 613 055 00	knob		1	
	01C	satin black			
4	911 631 231 00	switch headlight levelling system		1	M 605
5	911 613 342 00	rose		1	M 605
	01C	satin black			
6	911 613 622 00	tip switch for sliding roof and folding top control		1	
7	964 613 319 00	tip switch		1	
	01C	satin black for intensive windscr. washer			-
8	928 613 240 00	changeover switch		1	
	01C	satin black			
9	928 612 325 00	adapter plug		1	
	01C	black			
10	911 613 615 01	support		1	
	1DB	black for mirror changeover switch			
12	964 613 319 01	tip switch		1	
	01C	satin black for rear window wiper			
13	964 635 401 00	buzzer		1	
14	964 635 503 00	rose		1	
	01C	satin black			
15	911 618 209 00	hexagon nut M 7 X 0,75		1	

Pos	Part Number	Name	Remarks	Qty	Model
16	900 028 019 01	spring washer		1	
17	964 613 149 00	switch		3	
18	911 613 213 03	rose		3	
19	911 613 028 10	knob		2	
20	928 613 241 00	switch for door mirror heated		1	
21	964 652 307 00	cigarette lighter		1	
22	901 613 801 00	connector for auxiliary units		1	
23	964 613 621 00	switch		3	
	01C	satin black for window opener			
24	911 613 635 20	wiper frame		3	
25	964 618 147 00	potentiometer		1	
26	911 618 207 00	spacer sleeve		1	
27	901 615 616 20	rubber cap		2	
28	928 613 147 00	door contact switch		2	
28	964 613 601 00	door contact switch		2	
29	901 615 601 02	contact switch for glove compartment light		1	
29	964 613 601 00	door contact switch for glove compartment light		1	
29	964 613 602 00	contact switch for glove compartment light rear luggage dump		1	M 562
29	964 613 601 00	door contact switch for luggage boot lamp engine compartment lamp		1	
29	964 613 601 00	door contact switch for luggage boot lamp		1	
30	901 615 615 20	concave washer		2	
31	900 031 001 60	washer 8,4		X	
32	911 613 423 00	wiper frame		1	
33	911 613 425 00	rose		1	
	01C	satin black			
34	911 613 082 00	knob		1	
	01C	satin black			
35	964 618 104 00	potentiometer		1	
36	964 618 012 00	knob		1	
	01C	satin black			
37	964 618 014 00	knob		1	
	01C	satin black			
38	911 613 233 02	cap with symbol		1	
	01C	satin black fog headlamp			
39	911 613 234 02	cap with symbol		1	
	01C	satin black rear fog light			
40	911 613 232 02	cap with symbol		1	
	01C	satin black rear window heating			
41	964 613 325 00	tip switch		1	
	01C	satin black			
42	964 652 103 00	retaining ring		1	
	01C	satin black			
		- -- E N D -- -			

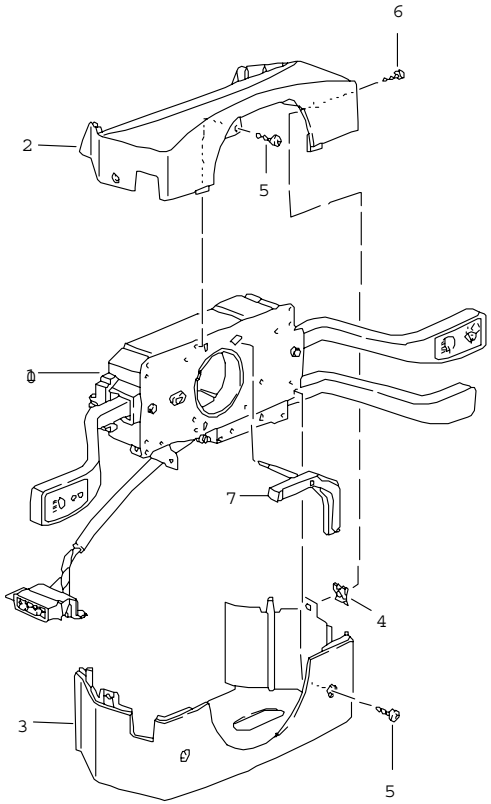

Pos	Part Number	Name	Remarks	Qty	Model
		steering column switch			
1	928 613 308 00	steering column switch	89	1	
	01C	satin black			
1	928 613 312 00	steering column switch	89	1	M 454
	01C	satin black			
1	928 613 314 00	steering column switch	89	1	M 454 (F)
	01C	satin black			
1	928 613 304 00	steering column switch	89	1	M 288,454
	01C	satin black			
1	928 613 306 00	steering column switch	89	1	M 288,454(F)
	01C	satin black			
1	928 613 305 00	steering column switch	89	1	M 288,454,
	01C	satin black			M 130
1	A 964 613 346 00	steering column switch	90-	1	
	01C	satin black			
1	964 613 346 01	steering column switch	90-	1	
	01C	satin black when required order also:			
1	N 014 133 8	oval-head screw		2	
1	A 964 613 345 00	steering column switch	90-	1	M 659
	01C	satin black			
1	964 613 345 01	steering column switch	90-	1	M 659
	01C	satin black when required order also:			
-	N 014 133 8	oval-head screw		2	
1	A 964 613 341 00	steering column switch	90-	1	M 454,659(F)
	01C	satin black			
1	964 613 341 01	steering column switch	90-	1	M 454,659(F)
	01C	satin black when required order also:			
-	N 014 133 8	oval-head screw		2	

Pos	Part Number	Name	Remarks	Qty	Model
1	A 964 613 340 00	steering column switch		1	M 659,454,
	01C	satin black	90-		M 130
1	964 613 340 01	steering column switch		1	M 659,454
	01C	satin black when required order also:			M 130
-	N 014 133 8	oval-head screw		2	
1	A 964 613 339 00	steering column switch	90-	1	M 454,659
	01C	satin black			
1	964 613 339 01	steering column switch	90-	1	M 454,659
	01C	satin black when required order also:			
-	N 014 133 8	oval-head screw		2	
1	964 613 344 00	steering column switch	90-	1	M 454 (F)
	01C	satin black			
1	964 613 344 01	steering column switch	90-	1	M 454 (F)
	01C	satin black when required order also:			
-	N 014 133 8	oval-head screw		2	
1	A 964 613 343 00	steering column switch		1	M 454,130
	01C	satin black			
1	964 613 343 01	steering column switch		1	M 454,130
	01C	satin black when required order also:			
-	N 014 133 8	oval-head screw		2	
1	A 964 613 342 00	steering column switch	90-	1	M 454
	01C	satin black			
1	964 613 342 01	steering column switch	90-	1	M 454
	01C	satin black when required order also:			
-	N 014 133 8	oval-head screw		2	
1	A 964 613 338 00	steering column switch	90-	1	M 288
	01C	satin black			

Pos	Part Number	Name	Remarks	Qty	Model
1	964 613 338 01	steering column switch	90-	1	M 288
	01C	satin black when required order also:			
-	N 014 133 8	oval-head screw		2	
1	A 964 613 337 00	steering column switch	90-	1	M 288,659
	01C	satin black			
1	964 613 337 01	steering column switch	90-	1	M 288,659
	01C	satin black when required order also:			
-	N 014 133 8	oval-head screw		2	
1	A 964 613 336 00	steering column switch	90-	1	M 288,454(F)
	01C	satin black			
1	964 613 336 01	steering column switch	90-	1	M 288,454(F)
	01C	satin black when required order also:			
-	N 014 133 8	oval-head screw		2	
1	A 964 613 335 00	steering column switch	90-	1	M 288,454
	01C	satin black			(GB)
1	964 613 335 01	steering column switch	90-	1	M 288,454
	01C	satin black when required order also:			(GB)
-	N 014 133 8	oval-head screw		2	
1	A 964 613 334 00	steering column switch	90-	1	M 288,454
	01C	satin black			
1	964 613 334 01	steering column switch	90-	1	M 288,454
	01C	satin black when required order also:			
-	N 014 133 8	oval-head screw		2	
1	964 613 333 00	steering column switch	90-	1	M 288,454,
	01C	satin black			M 659(F)
1	964 613 332 00	steering column switch	90-	1	M 288,454,
	01C	satin black			659 (GB)

Pos	Part Number	Name	Remarks	Qty	Model
1	964 613 331 00	steering column switch	90-	1	M 288,454,
	01C	satin black			659
2	964 552 273 00	switch housing		1	
	01C	satin black			
2	964 552 273 01	switch housing	90-	1	M 562
	01C	satin black			
3	964 552 275 00	switch housing		1	
	01C	satin black			
3	964 552 275 02	switch housing	90-	1	M 562
	01C	satin black			
3	964 552 275 01	switch housing		1	M 454
	01C	satin black			
3	964 552 275 03	switch housing		1	M 454,562
	01C	satin black			
3	964 552 275 04	switch housing		1	M 659
	01C	satin black			
3	964 552 275 05	switch housing		1	M 454,659
	01C	satin black			
3	964 552 275 06	switch housing		1	M 562,659
	01C	satin black			
3	964 552 275 07	switch housing		1	M 454,562,
	01C	satin black			M 659
4	999 591 888 02	speed nut		2	
5	999 073 047 02	tapping screw		3	
(5)	999 073 050 02	tapping screw	90-	4	M 562
6	900 143 002 07	tapping screw		2	
7	964 652 104 00	plate	90-	1	
		- -- E N D -- -			

Pos	Part Number	Name	Remarks	Qty	Model

Model	Year	MG	SG	Illustration	Restrictions	Update	18:23	24.11.2005	PORSCHE PET PORSCHE
964	94	9	04	904-00		194			

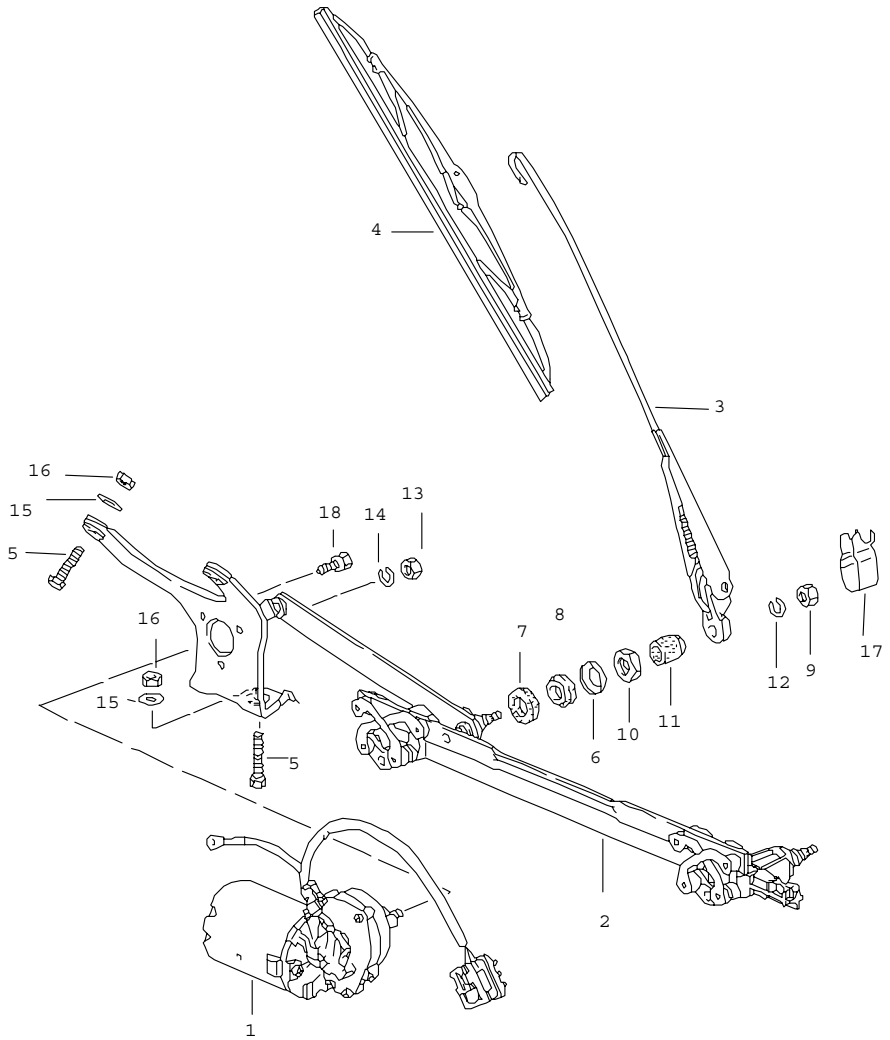

Pos	Part Number	Name	Remarks	Qty	Model
		windscreen wiper system			
1	927 628 303 03	wiper motor	/LL	1	
1	944 628 303 01	wiper motor	/RL	1	
2	964 628 039 00	crank drive	/LL	1	
2	964 628 040 00	crank drive	/RL	1	
3	911 628 313 00	wiper arm	/LL/L-91 /RL/R-91	1	
3	964 628 028 01	wiper arm	/LL/L92- /RL/R92-	1	
3	911 628 314 00	wiper arm	/LL/R-91	1	
3	964 628 028 02	wiper arm	/LL/R92-	1	
(3)	911 628 312 00	wiper arm	/RL/L-91	1	
(3)	964 628 028 03	wiper arm	/RL/L92-	1	
4	964 628 901 01	wiper blade		2	
5	N 010 217 9	hexagon-head bolt M 6 X 20		4	
6	911 628 963 00	washer		2	
7	901 628 923 01	rubber bush		2	
8	901 628 924 00	rubber bush		2	
9	N 011 118 11	hexagon nut BM 8		2	
10	911 628 825 00	hexagon nut		2	
11	964 628 339 00	cap		2	
12	901 628 927 00	spring washer		2	
13	900 076 025 02	hexagon nut M 8		1	
14	N 012 241 8	spring washer B 8		1	
15	N 011 666 7	washer B 6,4		4	
16	999 076 024 02	hexagon nut M 6		1	
17	928 628 623 00	cap	-91	2	

Pos	Part Number	Name	Remarks	Qty	Model	Pos	Part Number	Name	Remarks	Qty	Model
17	928 628 623 01	cap	92-	2							
	01C	satin black									
18	900 278 002 02	hexagon-head bolt		3							
		- -- E N D -- -									

Model	Year	MG	SG	Illustration	Restrictions	Update	18:23	24.11.2005	PORSCHE PET PORSCHE
964	94	9	04	904-05		194			

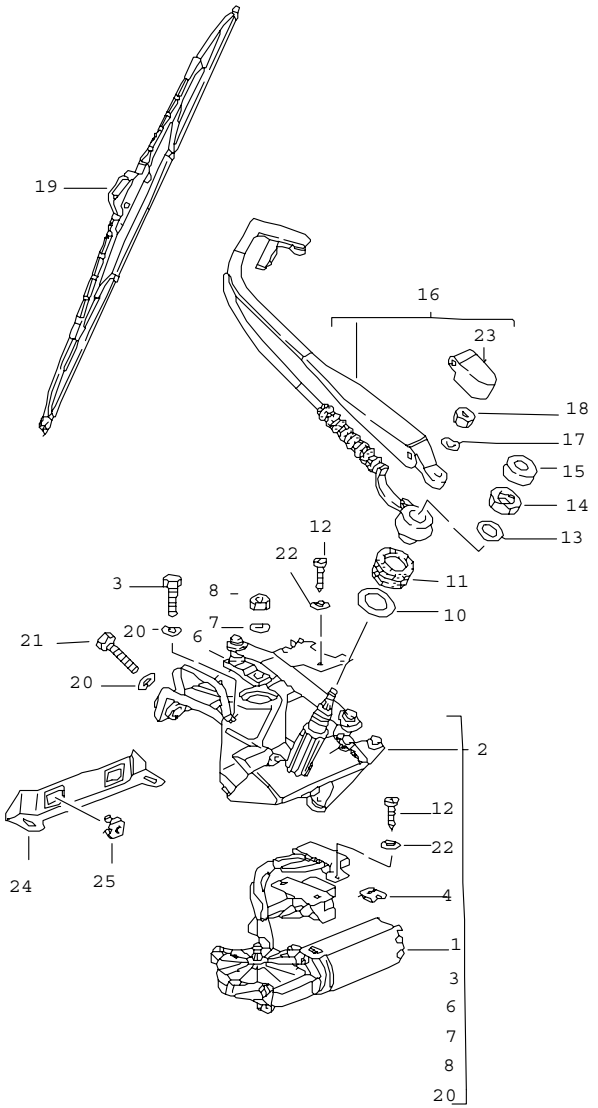

Pos	Part Number	Name	Remarks	Qty	Model
		rear window wiper			
1	964 628 120 00	wiper motor		1	
2	964 628 087 00	wiper frame with engine		1	COUPE
2	964 628 085 00	wiper frame with engine		1	TARGA
3	N 090 317 1	hexagon-head bolt		3	
4	477 807 191	speed nut B 4,2		2	
5	900 143 031 02	oval-head sheetmetal screw		3	
6	964 628 160 00	lever		1	
7	N 012 226 5	spring washer		1	
8	900 076 010 02	hexagon nut M 6		2	
9	964 628 273 00	bush		2	
10	964 628 337 01	washer		1	
11	964 628 270 01	rubber bush		1	COUPE
11	964 628 275 00	rubber bush		1	TARGA
12	900 143 031 02	oval-head sheetmetal screw		1	
13	964 628 336 00	washer		1	
14	911 628 825 00	hexagon nut		1	
15	964 628 339 00	cap		1	
16	993 628 032 00	wiper arm		1	
17	803 955 437	washer		1	
18	900 076 025 02	hexagon nut		1	
19	993 628 039 01	wiper blade		1	
20	N 011 666 7	washer A 6,4		2	
21	900 075 017 02	hexagon-head bolt		2	
22	900 151 028 02	washer		2	
23	928 628 623 01	cap		1	

Pos	Part Number	Name	Remarks	Qty	Model
	01C	satin black			
24	964 628 328 01	retaining bracket		1	
25	999 507 332 02	captive nut		2	
-	944 612 552 00	connector housing 6-pole wiring harness		1	
-	999 652 762 22	contact bush		6	
-	944 612 551 00	connector housing 6-pole wiper motor		1	
-	944 612 546 00	contact pin		6	
		- -- E N D -- -			

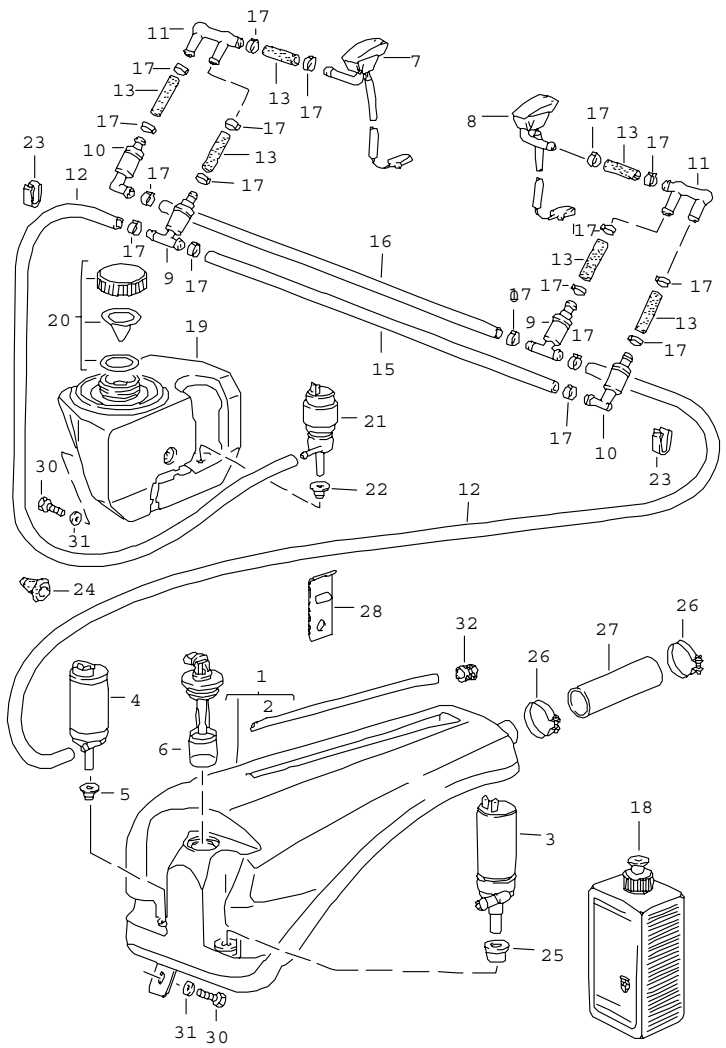

Pos	Part Number	Name	Remarks	Qty	Model
		windscreen washer system			
1	964 528 073 02	water reservoir		1	
-	999 063 015 40	plug		1	
2	964 528 575 00	vent hose		1	
3	928 628 172 01	pump	-92	1	
3	993 624 372 00	pump	93-	1	
4	431 955 651	pump		1	M 286
5	431 955 465 B	gasket		2	
6	964 628 185 00	tank gauge		1	
7	993 628 077 01	nozzle	/L	1	
	01C	black			
8	993 628 077 00	nozzle	/R	1	
	01C	black			
9	914 628 433 00	valve		2	M 286
10	477 955 481	valve		2	M 286
11	911 628 617 00	connecting piece		2	M 286
-	999 181 722 40	hose 4,6 X 8,2		*	
12	-	1650 MM		2	
13	-	150 MM		2	
14	-	25 MM		4	
15	-	820 MM		1	
16	-	840 MM		1	
17	N 100 020 01	clamp		20	
18	999 901 017 41	window cleaner 250 ML summer		X	
18	999 901 033 40	window cleaner 1000 ML winter		X	
19	964 528 019 02	water reservoir	-92	1	
19	964 528 019 02	water reservoir	93-	1	

Pos	Part Number	Name	Remarks	Qty	Model	Pos	Part Number	Name	Remarks	Qty	Model
20	911 628 077 00	threaded cover		1							
21	431 955 651	pump		1							
22	431 955 465 B	gasket		1							
23	999 651 238 02	cable holder		2							
24	911 612 413 00	rubber sleeve		2							
25	928 628 193 00	gasket		1							
26	N 024 147 1	hose clamp		2							
27	900 922 006 40	filling hose		1							
28	964 628 420 00	support		2							
30	N 010 215 13	hexagon-head bolt M 6 X 15		2							
31	N 011 666 7	washer B 6,4		2							
32	999 702 173 50	rubber sleeve		1							
33	964 628 194 00	plug		1							
		- -- E N D -- -									

Model	Year	MG	SG	Illustration	Restrictions	Update	18:24	24.11.2005	PORSCHE PET PORSCHE
964	94	9	04	904-20		194			

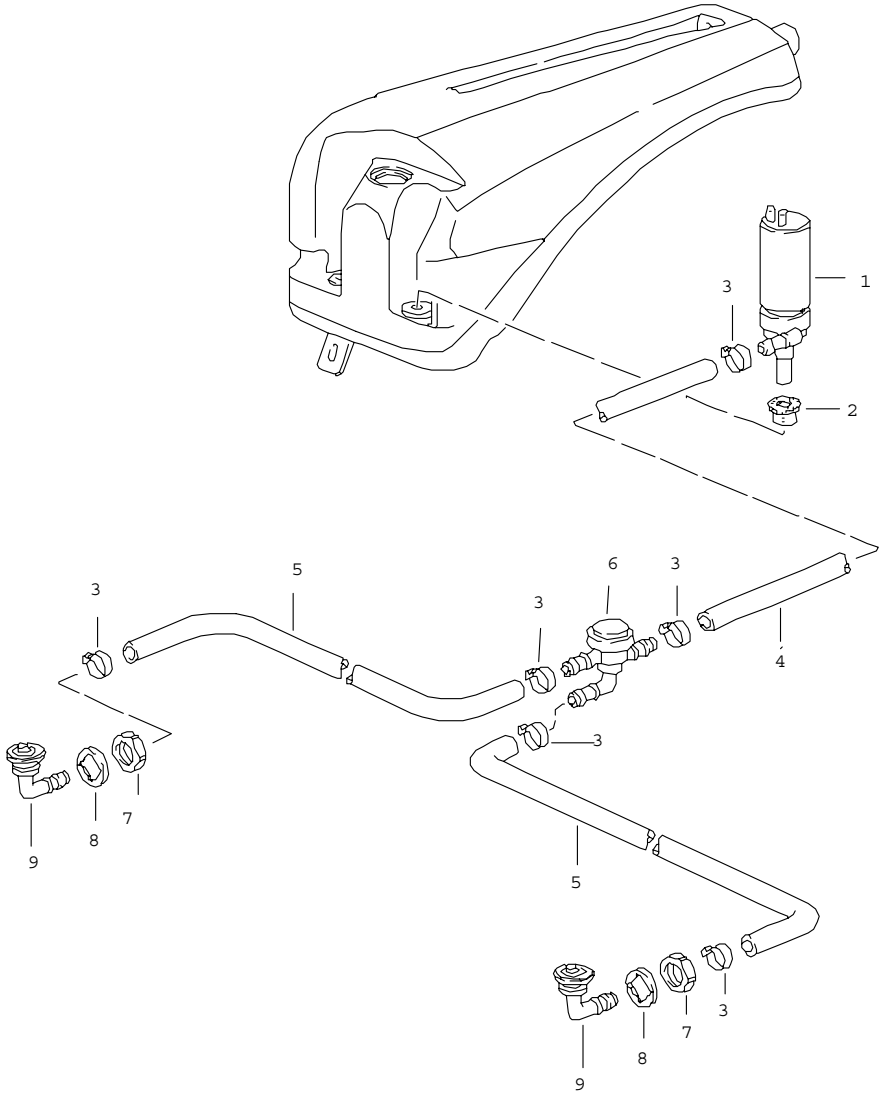

Pos	Part Number	Name	Remarks	Qty	Model
		headlight washer system			
1	191 955 681	pump		1	
2	928 628 193 00	gasket		1	
3	N 023 570 2	hose clamp		8	
-	999 181 806 40	hose PVC 10 X 16		*	
4	-	1000 MM		1	
5	-	610 MM		3	
6	281 955 187	valve		1	
7	900 281 002 40	hexagon nut		2	
8	951 628 173 00	desk pad		2	
9	911 628 071 01	jet carrier		2	
	01C	satin black			
-	999 651 230 02	hose holder 15,0 - 18,0		4	
-	999 651 239 09	hose holder 10,0 - 11,0		5	
		- -- E N D -- -			

Model	Year	MG	SG	Illustration	Restrictions	Update	18:24	24.11.2005	PORSCHE PET PORSCHE
964	94	9	04	904-20		194			

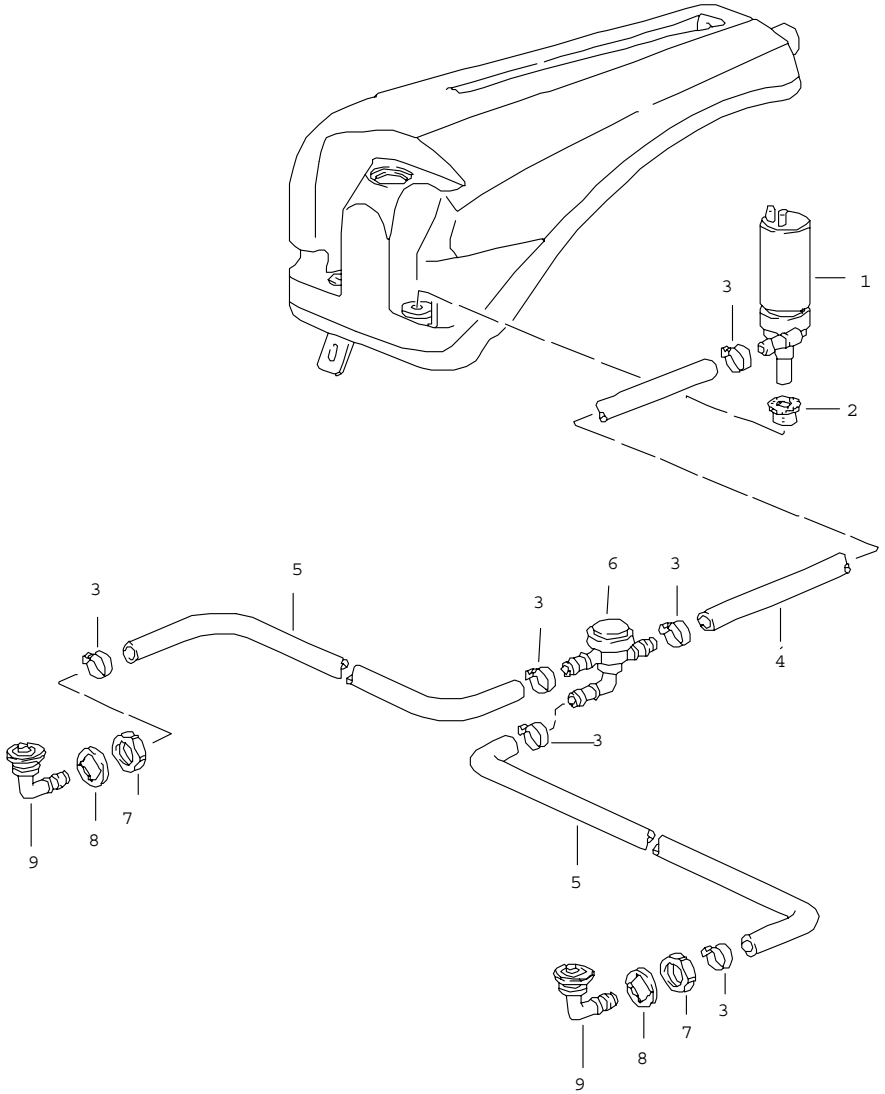

Pos	Part Number	Name	Remarks	Qty	Model
		headlight washer system			
1	191 955 681	pump		1	
2	928 628 193 00	gasket		1	
3	N 023 570 2	hose clamp		8	
-	999 181 806 40	hose PVC 10 X 16		*	
4	-	1000 MM		1	
5	-	610 MM		3	
6	281 955 187	valve		1	
7	900 281 002 40	hexagon nut		2	
8	951 628 173 00	desk pad		2	
9	911 628 071 01	jet carrier		2	
	01C	satin black			
-	999 651 230 02	hose holder 15,0 - 18,0		4	
-	999 651 239 09	hose holder 10,0 - 11,0		5	
		- -- E N D -- -			

Model	Year	MG	SG	Illustration	Restrictions	Update	18:24	24.11.2005	PORSCHE PET PORSCHE
964	94	9	05	905-00		194			

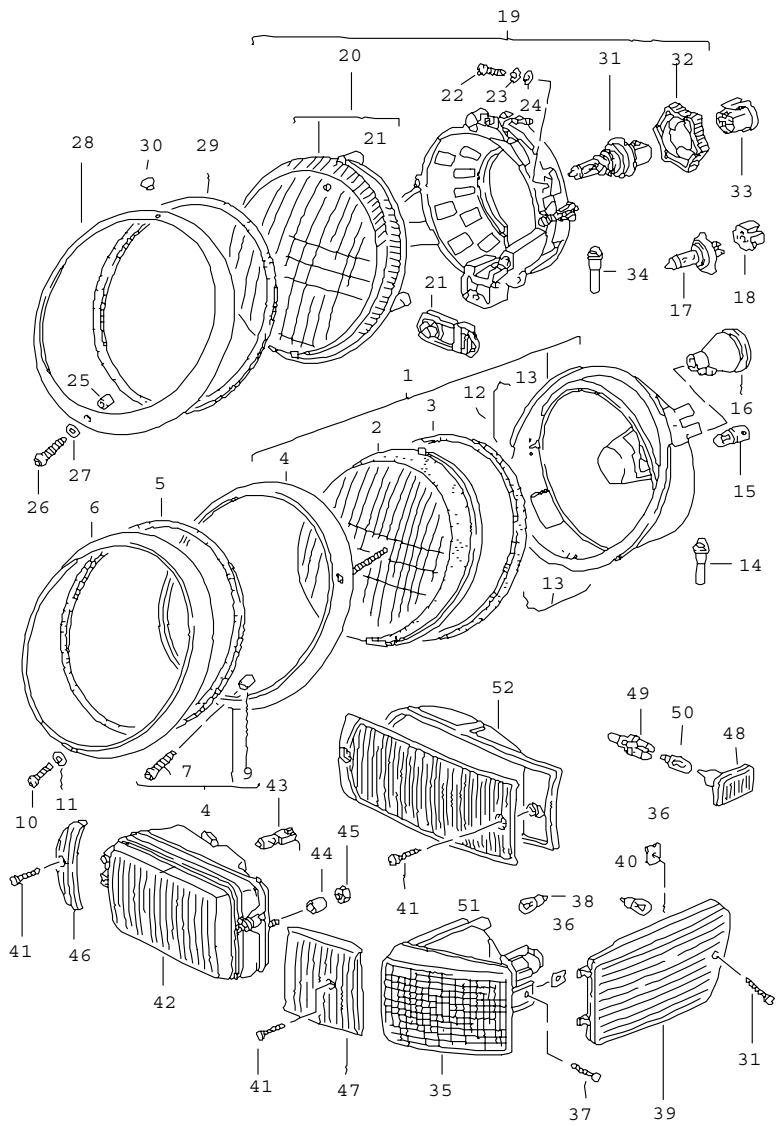

Pos	Part Number	Name	Remarks	Qty	Model
		headlamp			
1	911 631 113 02	headlamp	/LL	2	
1	911 631 112 02	headlamp		2	M 492
1	911 631 024 00	headlamp	/LL	2	M 605
1	911 631 023 00	headlamp		2	M 605/492
2	911 631 927 00	lens	/LL	2	
2	911 631 927 01	lens	/RL	2	M 492
3	911 631 967 00	gasket		2	
4	911 631 933 01	headlamp ring		2	
5	911 631 115 02	gasket		2	
6	911 631 141 00	headlamp ring		2	
7	911 631 033 00	screw		2	
9	911 631 139 00	spacer sleeve		2	
10	911 631 132 00	oval-head screw M 4 X 9		2	
11	113 951 539	washer		2	
12	901 631 116 02	locking spring upper		6	
13	644 631 122 00	locking spring lower		5	
14	911 631 259 02	drain tube		2	
15	900 631 103 90	bulb 12V 4W		2	
16	964 612 325 00	rubber sleeve for wiring harness headlamp		4	
17	999 631 202 90	halogen bulb H-4		2	
17	999 631 202 91	halogen bulb H-4		2	(F)
18	911 631 108 00	terminal sleeve housing		2	
35	964 631 405 00	direction indicator light	/L	1	
(35)	964 631 406 00	direction indicator light	/R	1	

Pos	Part Number	Name	Remarks	Qty	Model
36	N 902 689 01	speed nut	/R	2	
37	900 143 151 02	combination tapping screw		2	
38	900 631 127 90	bulb 12V 21W		2	
39	964 631 409 00	trim	/L	1	
(39)	964 631 410 00	trim	/R	1	
41	N 013 943 8	screw B 4,2 X 22		6	
42	964 631 203 00	fog headlamp	/L	1	
42	964 631 204 00	fog headlamp	/R	1	
42	964 631 203 01	fog headlamp	/L	1	(F)
42	964 631 204 01	fog headlamp	/R	1	(F)
43	900 631 126 90	halogen bulb		2	
44	964 631 661 00	spacer sleeve		4	
45	N 011 005 14	hexagon nut M 5		4	
46	964 631 415 00	trim	/L	1	
(46)	964 631 416 00	trim	/R	1	
47	964 631 417 01	trim		2	
47	964 631 417 01	trim		2	(F)
48	4A0 949 101	side turn signal		2	
49	161 949 111	bulb holder		2	
50	999 631 032 90	bulb 12V 5W		2	
51	964 631 203 75	trim	/L	1	CARRERA RS
51	964 631 204 75	trim	/R	1	CARRERA RS
52	964 631 025 75	housing		2	CARRERA RS
		- -- E N D -- -			

Pos	Part Number	Name	Remarks	Qty	Model

Model	Year	MG	SG	Illustration	Restrictions	Update	18:25	24.11.2005	PORSCHE PET PORSCHE
964	94	9	05	905-02		194			

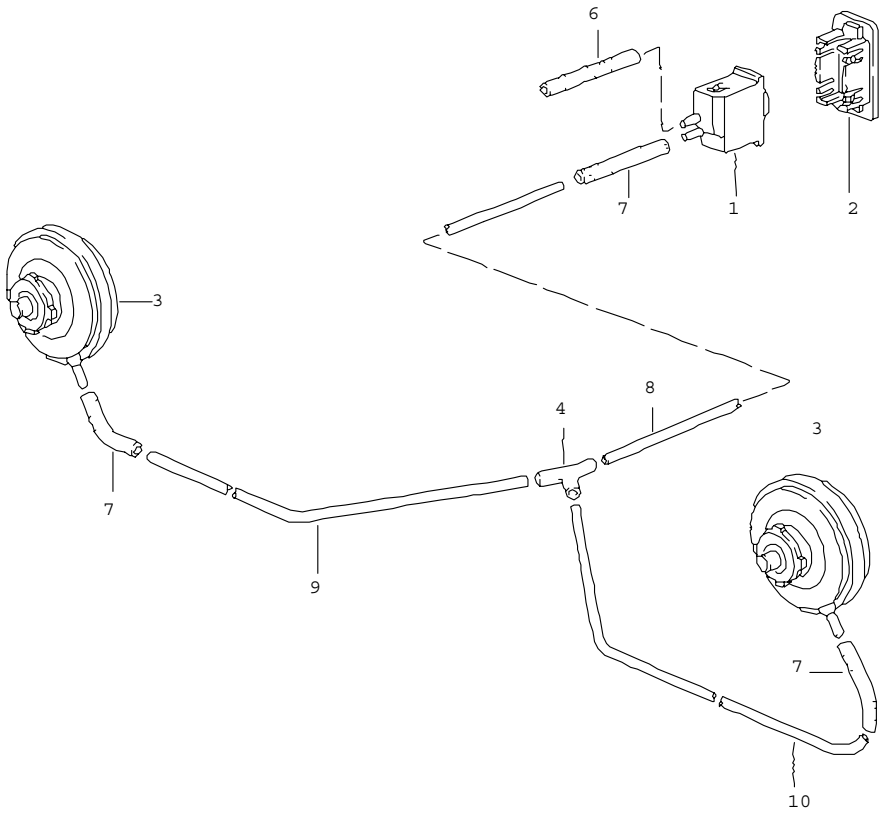

Pos	Part Number	Name	Remarks	Qty	Model
		headlight levelling system			M 605
1	911 631 231 00	switch		1	CARRERA 2/4
1	965 631 231 00	switch		1	TURBO
2	911 613 342 00	rose		1	
	01C	black			
3	911 631 223 00	actuator		2	
4	928 573 727 02	distributing piece		2	
-	999 181 070 40	connecting hose 3,5 X 8 120 MM 260 MM		* 2 1	
-	999 181 071 40	connecting hose 3,5 X 8 60 MM		* 3	
8	911 631 710 00	vacuum line 1250 MM	/LL	1	
8	911 631 710 03	vacuum line 2350 MM	/RL	1	
9	911 631 710 02	vacuum line 1350 MM		1	
10	911 631 710 01	vacuum line 380 MM		1	
		- -- E N D -- -			

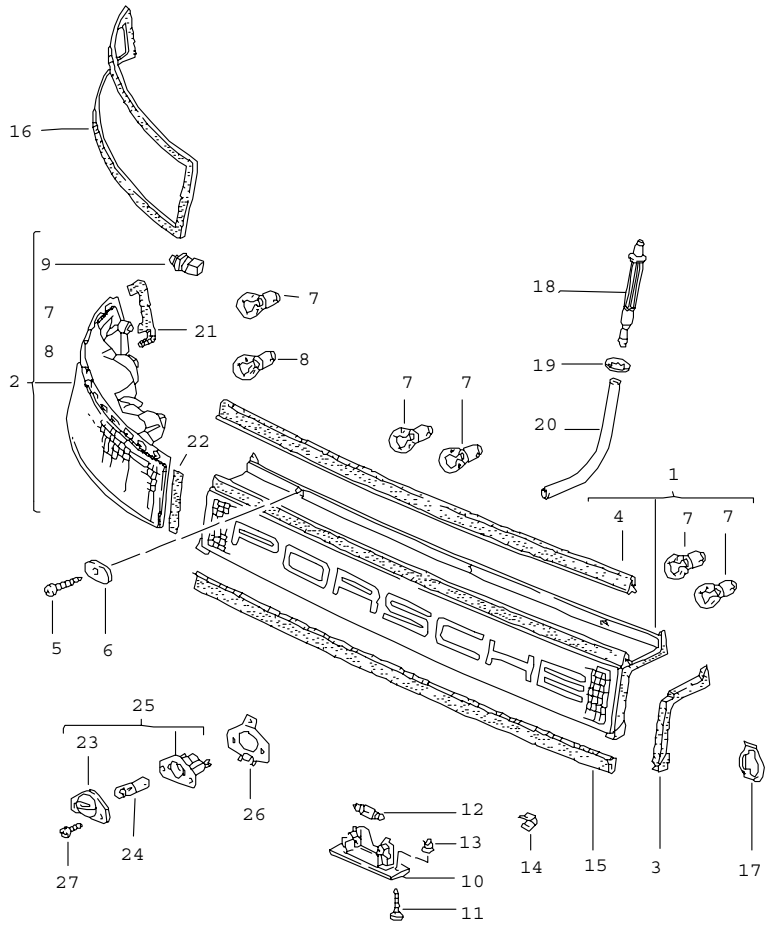

Pos	Part Number	Name	Remarks	Qty	Model
		covering combined lights rear			
1	964 631 159 00	covering		1	
1	964 631 170 00	covering		1	(J)
2	964 631 907 00	combined lights	/L 89-	1	
(2)	964 631 908 00	combined lights	/R 89-	1	
3	964 631 145 00	gasket	/L -90	1	
(3)	964 631 146 00	gasket	/R -90	1	
4	964 631 147 00	gasket		1	
5	900 143 007 02	tapping screw		3	
6	964 631 127 00	spacer		3	
7	900 631 127 90	bulb 12V 21W		6	
8	900 631 128 90	bulb 12V 21/5W		2 2	
10	964 631 620 00	license plate light		2	
	01C	black			
10	964 631 620 01	license plate light		2	(CH),(J),
	01C	black			(USA),(CDN)
11	900 143 085 07	tapping screw		2	
12	900 631 105 90	bulb		2	
13	999 507 050 40	expander nut		4	
14	999 591 895 02	retaining clip		3	
15	964 631 148 00	gasket	-90	1	
16	964 631 420 00	gasket	/L -90	1	
(16)	964 631 421 00	gasket	/R -90	1	
17	964 631 473 00	cable guide		2	
18	964 631 423 00	ventilation tube		1	
19	999 591 977 02	clamping washer		1	
20	000 043 204 78	hose		X	

Pos	Part Number	Name	Remarks	Qty	Model
21	964 631 911 00	gasket	/L 91-	1	
(21)	964 631 912 00	gasket	/R 91-	1	
22	964 631 913 00	gasket	91-	2	
23	911 631 606 00	lens		2	CARRERA RS TURBO 3,6
24	900 631 104 90	bulb 12V-5W		2	CARRERA RS TURBO 3,6
25	911 631 620 04	license plate light		2	CARRERA RS TURBO 3,6
26	964 505 609 00	support		2	CARRERA RS TURBO 3,6
27	900 146 041 07	oval-head screw BM3X15		4	CARRERA RS TURBO 3,6
-	813 971 959	connector housing for POS. 2		2	
-	443 972 921 C	gasket for 813.971.959		2	
-	443 972 616	locking device for 813.971.959		2	
		- -- E N D -- -			

Pos	Part Number	Name	Remarks	Qty	Model

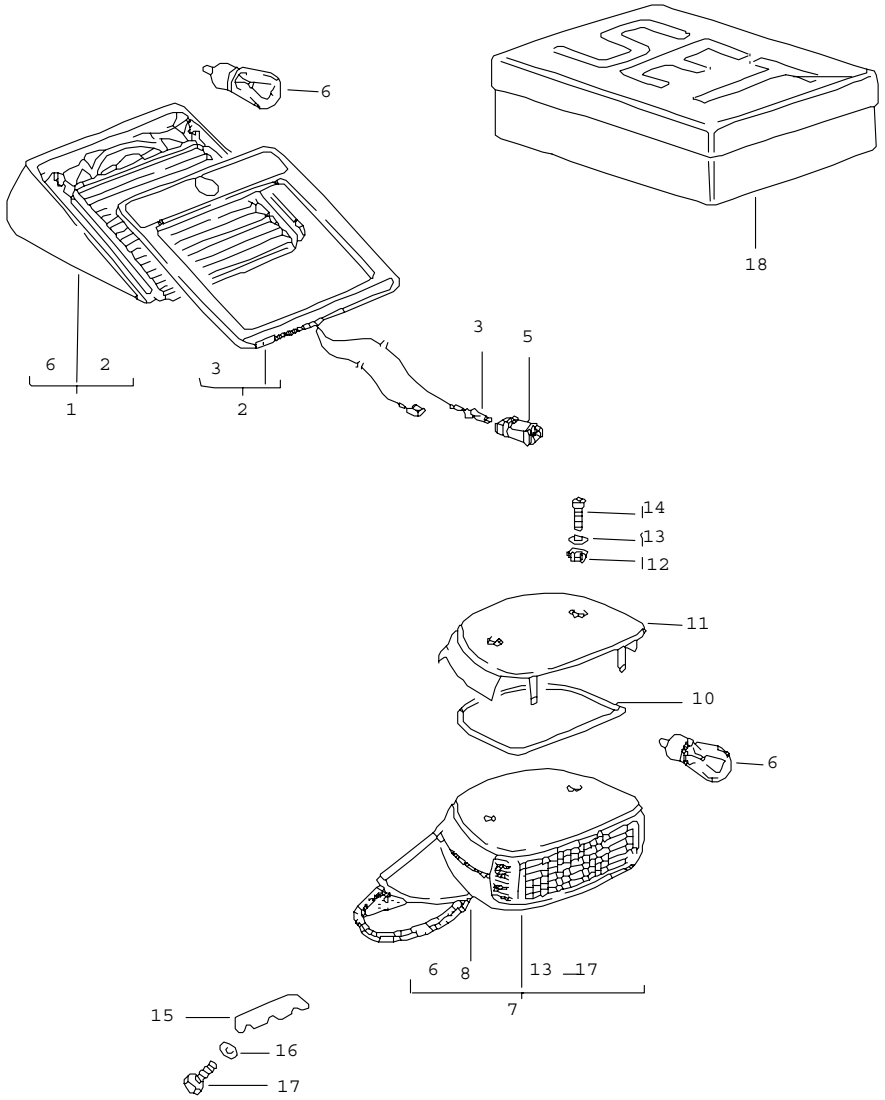

Pos	Part Number	Name	Remarks	Qty	Model
		additional stoplamp			
1	911 631 070 00	brake light		1	COUPE/TARGA
	01C	black upper			
2	911 631 061 01	frame for light lower		1	COUPE/TARGA
(2)	911 631 061 00	frame for light upper		1	COUPE/TARGA
3	111 971 985	flat plug		1	
5	813 972 643 A	socket		1	
6	900 631 127 90	bulb 21 W		1	
7	964 631 072 00	brake light outer		1	CABRIO
8	964 631 458 00	gasket		1	CABRIO
10	911 631 457 00	gasket		1	
11	911 631 452 00	cover		1	
12	911 631 422 00	rubber washer		2	
13	911 631 421 00	plastic washer PA 6		2	
14	900 146 067 07	lens-head screw M 4 X 12		2	
15	911 631 419 00	desk pad		1	
16	N 011 666 7	washer B 6,4		2	
17	999 072 005 09	hexagon-head bolt M 6 X 12 4 X 21 X 8		2	
18	A 000 043 069 00	adhesive set for frame for light		1	
		- -- E N D -- -			

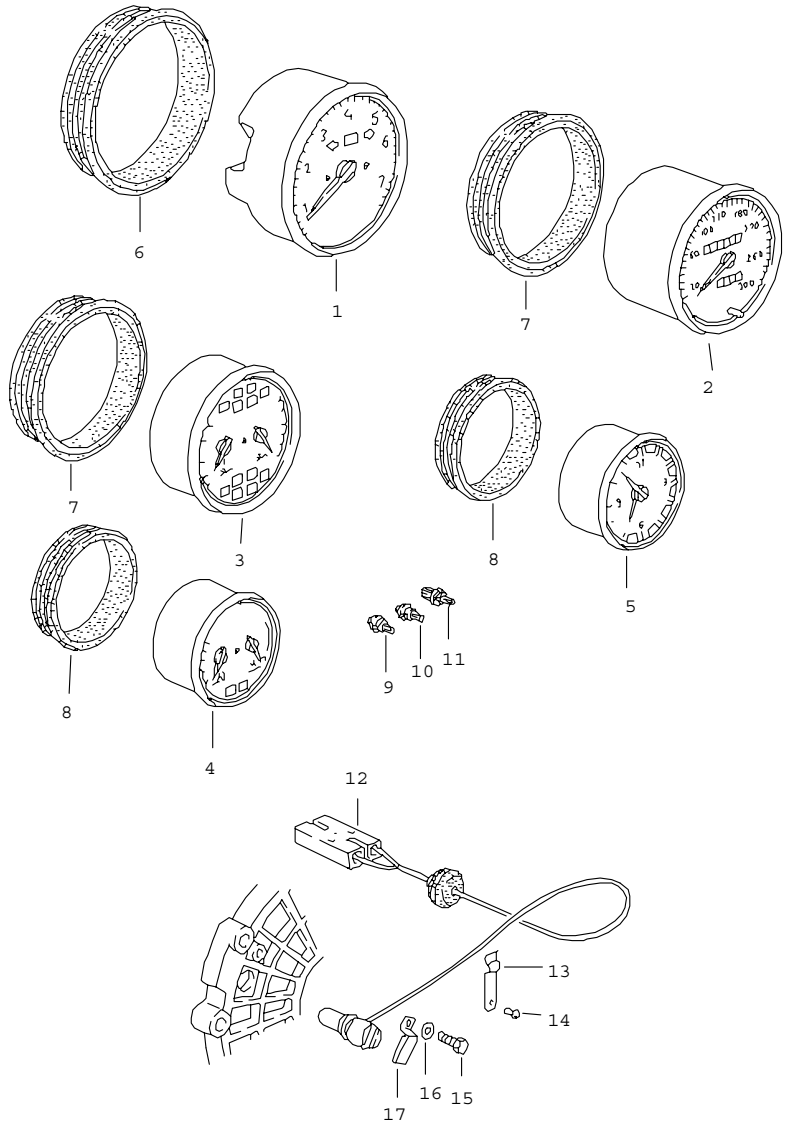

Pos	Part Number	Name	Remarks	Qty	Model
		instruments			
		see technical information GR.X, NR.4/93			
		electronic mail GR.9, NR.5/98			
1	964 641 301 00	tachometer		1	CARRERA 2/4 CARRERA RS
1	964 641 311 00	tachometer	90-	1	CARRERA 2/4 M 659
1	964 641 314 00	tachometer	93-	1	CARRERA 2/4 M 545/659
1	964 641 313 00	tachometer	90-	1	CARRERA 2/4 (GB) M 659
1	964 641 303 00	tachometer		1	CARRERA 4
	2QY	rubicon grey			M 096
1	964 641 315 00	tachometer		1	CARRERA 4
	2QY	rubicon grey			M 096/659
1	964 641 316 00	tachometer		1	CARRERA 4
	2QY	rubicon grey			(GB) M 096/ M 659
1	964 641 317 00	tachometer		1	CARRERA 4
	2QY	rubicon grey			M 096/659/ M 545
1	965 641 321 00	tachometer	-92	1	TURBO
1	965 641 321 01	tachometer	93-	1	TURBO
1	965 641 323 00	tachometer	-92	1	TURBO (GB)
1	965 641 323 01	tachometer	93-	1	TURBO (GB)
2	964 641 516 00	speedometer		1	
2	964 641 508 00	speedometer		1	(GB)
2	964 641 016 00	speedometer		1	M 215
2	964 641 526 00	speedometer	90-	1	M 249
2	993 641 528 00	speedometer	90-	1	(GB) M 249
2	964 641 026 00	speedometer	90-	1	M 215/249

Pos	Part Number	Name	Remarks	Qty	Model
2	964 641 536 00	speedometer	90-	1	M 659
2	993 641 538 00	speedometer	90-	1	CARRERA TURBO (GB) M 659
2	964 641 036 00	speedometer	90-	1	CARRERA TURBO M 215/659
2	993 641 546 00	speedometer	93-	1	TURBO M 659
2	964 641 546 00	speedometer		1	CARRERA 4
	2QY	rubicon grey			M 096
2	964 641 548 00	speedometer		1	CARRERA 4
	2QY	rubicon grey			(GB) M 096
2	964 641 046 00	speedometer		1	CARRERA 4
	2QY	rubicon grey			M 215/096
2	964 641 556 00	speedometer		1	CARRERA 4
	2QY	rubicon grey			M 096/659
2	964 641 558 00	speedometer		1	CARRERA 4
	2QY	rubicon grey			(GB)M 096/ M 659
2	964 641 056 00	speedometer		1	CARRERA 4
	2QY	rubicon grey			M 215/096/ M 659
3	964 641 103 00	instrument cluster		1	
3	964 641 104 00	instrument cluster		1	CARRERA 4
	2QY	rubicon grey			M 096
4	964 641 202 00	instrument cluster		1	
4	964 641 203 00	instrument cluster		1	CARRERA 4
	2QY	rubicon grey			M 096
5	993 641 701 00	clock		1	
5	964 641 702 00	clock		1	CARRERA 4
	2QY	rubicon grey			M 096
6	911 641 903 01	rubber ring		1	
7	911 641 902 01	rubber ring		2	
8	911 641 901 01	rubber ring		2	
9	964 641 920 00	bulb 12 V 0,9 W		X	
10	999 631 027 90	bulb 12 V 1,5 W		X	
11	964 641 920 00	bulb 12 V 0,9 W		X	
12	964 606 210 01	pulse sender	-90	1	
13	911 612 406 01	cable holder	-90	1	
14	900 093 010 02	grooved nail	-90	1	
15	999 072 005 09	hexagon-head bolt	-90	1	
16	900 025 014 02	washer	-90	1	
17	964 606 219 00	tab washer	-90	1	

- -- E N D -- -

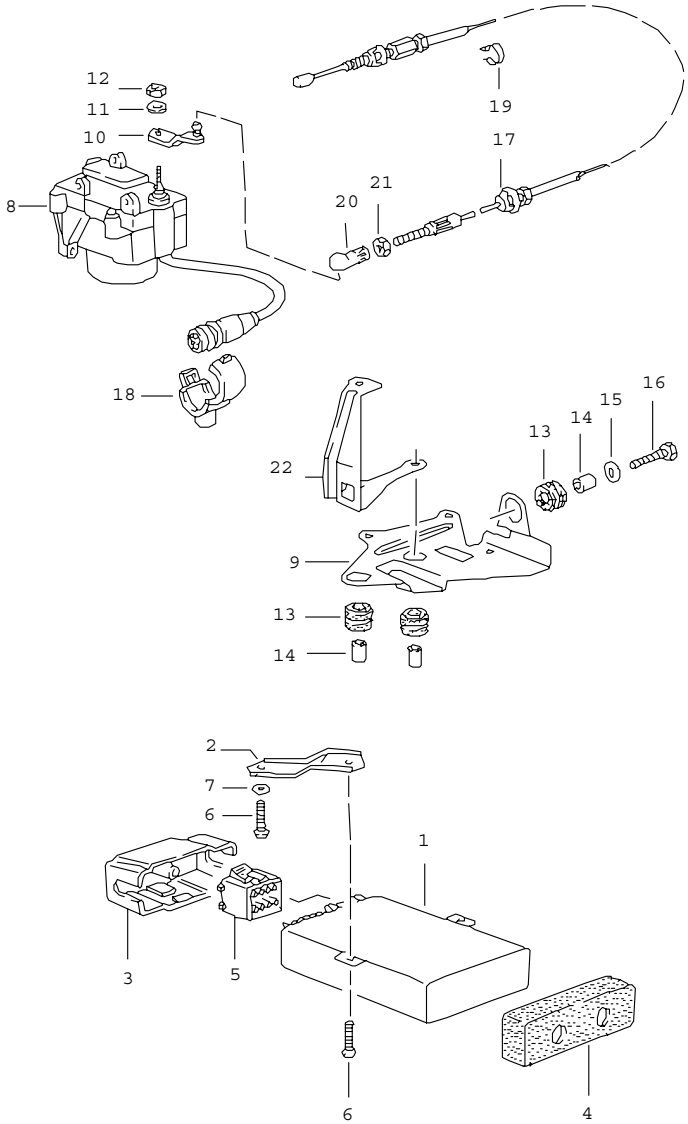

Pos	Part Number	Name	Remarks	Qty	Model
		cruise control			CARRERA 2/4
1	911 617 227 00	control unit		1	
2	911 617 021 00	support	/LL	1	
(2)	911 617 022 00	support	/RL	1	
3	911 617 133 02	cap	/LL	1	
4	911 617 134 00	cap	/RL	1	
5	911 617 427 00	coding plug		1	
6	900 146 003 02	oval-head screw M 5 X 10		3	
7	900 025 003 02	washer A 5,3		4	
8	944 617 121 00	drive link		1	
9	964 617 028 00	support		1	
10	944 423 047 00	lever		1	
11	N 012 229 3	spring washer A 8		1	
12	N 011 018 4	hexagon nut M 8 X 1		1	
13	999 702 133 40	rubber mounting 10 X 18 X 2		3	
14	999 531 014 02	bush 6,1 X 10,2		3	
15	N 011 666 7	washer B 6,4		6	
16	900 075 017 02	hexagon-head bolt M 6 X 25		3	
17	964 110 025 02	accelerator cable		1	
18	944 612 450 00	support		1	
19	477 971 851	cable clip		1	
20	N 015 521 3	ball socket		1	
21	N 011 005 14	hexagon nut M 5		1	
22	964 617 199 00	support		1	
		- -- E N D -- -			

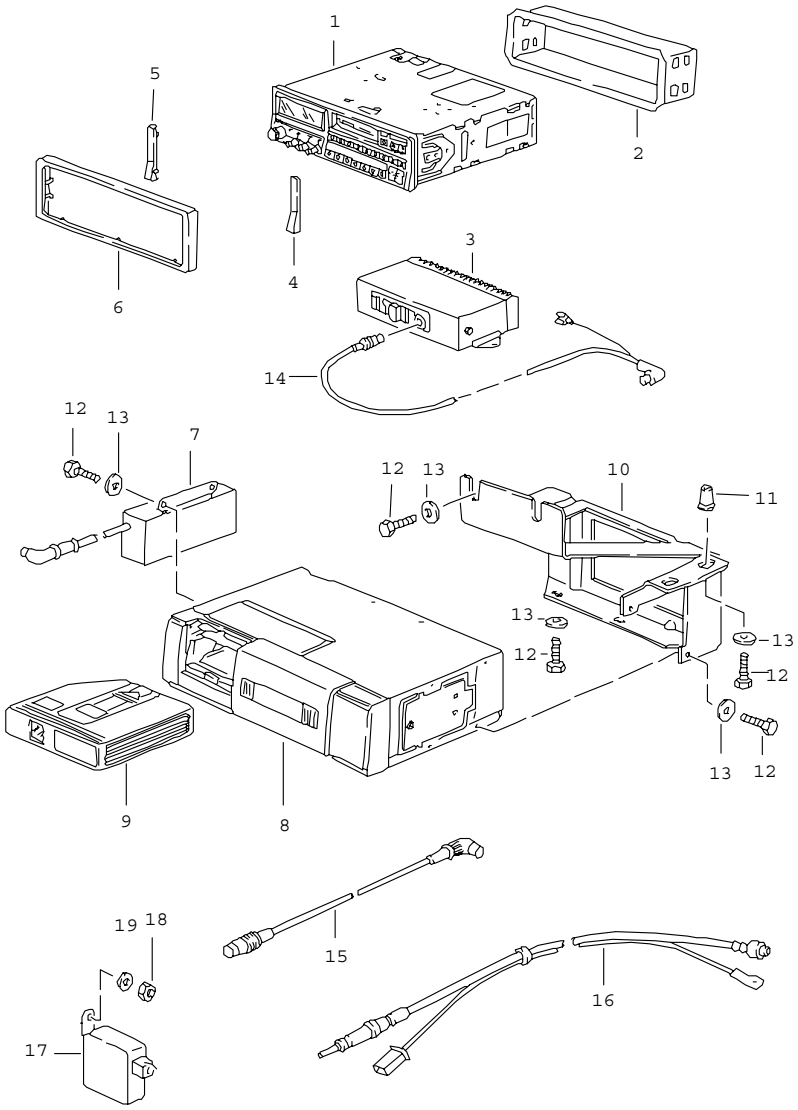

Pos	Part Number	Name	Remarks	Qty	Model
		radio installation parts			
1	> 911 645 071 01	radio BERLIN IQR 88	-90	1	M 326
1	> 911 645 159 01	radio BREMEN SQR 46	-90	1	
1	> 911 645 139 02	radio TORONTO SQR 46	-90	1	
(1)	> 964 645 101 00	radio SYMPHONY	91	1	
(1)	> 964 645 103 00	radio SYMPHONY RDS	92-	1	M 327
(1)	964 645 109 00	radio BREMEN RCM 43	94-	1	TURBO M 334
(1)	964 645 110 00	radio BREMEN RCM 43	94-	1	TURBO M 334/ M 692
(1)	964 645 015 00	radio CR-2	92-	1	(J)
(1)	> 964 645 107 00	radio LONDON RDM 42	93-	1	M 693
(1)	964 645 108 00	radio PARIS RCR 41	93-	1	M 333
(1)	> 928 645 018 00	installation set cd player CD-10		1	M 690
2	911 645 173 03	retaining frame for radio		1	
(2)	928 645 072 01	support frame for CD-10		1	
3	> 928 645 405 02	stereo booster		1	M 494
4	928 645 904 00	cover		1	M 327
5	928 645 903 00	cover		1	M 327
6	928 645 071 00	frame		1	
	01C	black for CR-2,CD-10			

Pos	Part Number	Name	Remarks	Qty	Model
7	964 645 112 00	adapter for cd changer		1	M 327/334
8	> 964 645 111 00	cd changer CDC-1		1	M 692
9	964 645 113 00	rack for cd changer		1	
10	964 645 221 00	support		1	
11	999 500 044 02	nut		4	
12	900 075 057 02	hexagon-head bolt M 6X16		4	
13	N 011 666 7	washer B 6,4		4	
14	A 964 645 175 01	connecting cable radio stereo booster	-91	1	
14	964 645 175 01	connecting cable radio stereo booster		1	
15	964 645 451 00	connecting cable cd changer	/RL	1	
15	964 645 450 00	connecting cable cd changer	/LL	1	
16	964 645 263 00	connecting cable antenna booster		1	M 326
16	964 645 185 00	connecting cable antenna booster		1	SPEEDSTER
17	964 645 173 00	antenna booster		1	
18	900 076 010 02	hexagon nut M 6		1	
19	N 011 524 7	washer B 6,4		1	
		- -- E N D -- -			

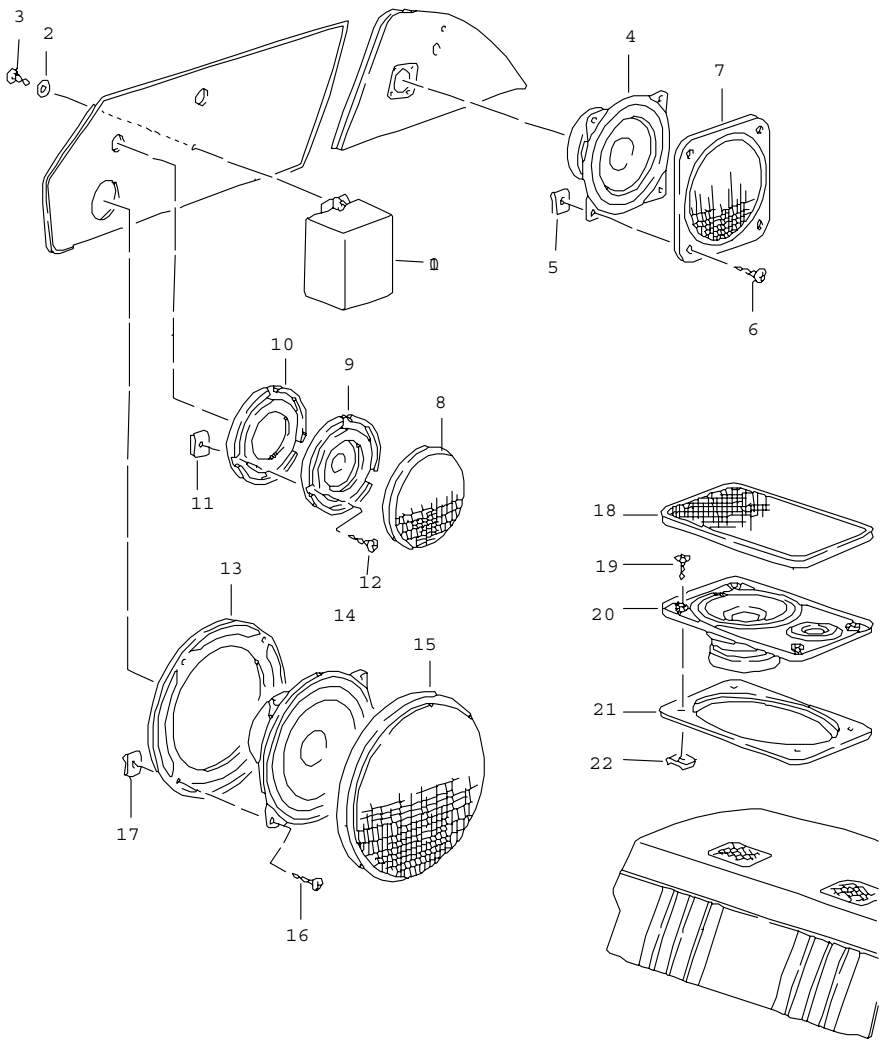

Pos	Part Number	Name	Remarks	Qty	Model
		loudspeaker			
		see tpi GR.9 , NR.10 , 09/94			
1	911 645 575 00	diplexer	-92	1	M 490
2	900 025 002 02	washer B 4,3		2	
3	N 013 967 9	tapping screw B 4,2X19		2	
4	911 645 421 00	loudspeaker	-92	2	CABRIO
4	964 645 504 00	loudspeaker	93-	2	CABRIO SPEEDSTER
5	999 507 071 00	speed nut B 3,9		8	CABRIO
6	900 143 132 07	tapping screw B 3,9X16		8	CABRIO
7	928 645 423 00	loudspeaker grille		2	CABRIO
8	911 555 453 00	loudspeaker grille		2	
	01C	black			
9	911 645 417 00	tweeter	-92	2	M 490
9	964 645 502 00	tweeter	93-	2	
10	911 555 673 00	bracket		2	
11	N 900 488 01	speed nut B 3,5		6	
12	900 143 124 07	tapping screw B 3,5X13		6	
13	911 555 671 00	bracket		2	
14	911 645 433 00	door speaker	-92	2	
14	911 645 415 00	woofer	-92	2	M 490
14	964 645 503 00	woofer	93-	2	
(14)	911 645 434 00	loudspeaker		2	SPEEDSTER
15	911 555 451 00	loudspeaker grille		2	
	01C	black			
16	N 013 967 9	tapping screw B 4,2X19		8	

Pos	Part Number	Name	Remarks	Qty	Model
17	999 591 575 02	speed nut B 4,2		8	
18	944 555 149 00	loudspeaker grille		2	
	01C	satin black			
19	900 145 084 07	tapping screw B 4,2X19		8	
20	911 645 435 00	rear loudspeaker		2	
20	911 645 419 00	rear loudspeaker		2	M 490
21	944 555 159 00	frame		2	
22	999 507 032 02	speed nut B 3,9		8	
		- -- E N D -- -			

M002	911 CARRERA RS ROAD VERSION
M003	911 CARRERA RS CLUBSPORT
M018	SPORTS STEERING WHEEL
M018	WITH ELEVATED HUB 30MM
M020	SPEEDOMETER WITH TWO SCALES MPH-KM/H
M024	VERSION FOR GREECE
M030	SPORT-TYPE RUNNING GEAR
M032	TOURING SUSPENSION
M033	LOWERED VEHICLE
M034	VERSION FOR ITALY
M058	IMPACT ABSORBERS FRONT AND REAR
M061	VERSION FOR GREAT BRITAIN
M062	VERSION FOR SWEDEN
M063	VERSION LUXEMBURG
M064	VERSION FOR NETHERLANDS
M065	VERSION FOR DENMARK
M066	VERSION FOR NORWAY
M067	VERSION FOR FINLAND
M068	VERSION FOR THAILAND
M069	OTHER COUNTRY VERSION
M071	EU COUNTRY VERSION
M092	SPECIAL MODEL TURBO S MOD. 97
M111	VERSION FOR AUSTRIA
M113	VERSION FOR CANADA
M114	VERSION FOR TAIWAN
M119	VERSION FOR SPAIN
M124	VERSION FOR FRANCE
M126	CONTROL AND INDICATIONS IN FRENCH LETTERING
M127	CONTROL AND INDICATIONS IN SCHWEDISCH
M130	CONTROL AND INDICATIONS IN ENGLISH LETTERING
M139	SEAT HEATING SYSTEM, LEFT SEAT
M150	OPERATES WITH LEADED GAS
M159	ENGINE SOUND PACHAGE
M185	SAFETY BELTS 2-POINT,
M185	REAR AUTOMATIC
M186	SAFETY BELTS 2-POINT, REAR
M186	MANUAL
M193	VERSION FOR JAPAN
M197	STRONGER BATTERY
M215	VERSION FOR SAUDI ARABIA
M219	DIFFERENTIAL
M220	LOCKING DIFFERENTIAL 40 %
M224	AUTOMATIC LIMITED SLIP DIFFERENTIAL
M225	VERSION FOR BELGIUM
M249	TIPTRONIC TRANSMISSION
M261	OUTSIDE MIRROR - PLAIN - PASSENGER'S SIDE,
M261	ELECTRICALLY ADJUSTABLE AND HEATABLE
M277	VERSION FOR SWITZERLAND
M288	HEADLAMP WASHER
M320	RADIO "PORSCHE CR-11"
M324	RADIO "PORSCHE CR-10"

M325	VERSION FOR SOUTH AFRICA/NEW ZEALAND	
M326	RADIO "PORSCHE CR-21"	
M329	RADIO BLAUPUNKT TORONTO SQR 48	
M329	RADIO "PORSCHE CR-210"	
M330	RADIO BLAUPUNKT TORONTO SQR 46	
M330	RADIO "PORSCHE CR-31"	97-
M331	RADIO "PORSCHE CR-1"	
M333	RADIO PARIS RCR 41	
M334	RADIO/CASSETTE PLAYER BREMEN RCM 42	
M335	AUTOMATICAL SAFETY BELT, 3-POINT,	
M335	REAR	
M336	RADIO "DUESSELDORF RCR 84"	
M338	REAR-WHEEL DRIVE	
M339	4-WHEEL DRIVE	
M340	SEAT HEATING SYSTEM, RIGHT SEAT	
M371	SPORT SEAT, LEFT	
M371	MANUALLY ADJUSTABLE	
M372	SPORT SEAT, RIGHT	
M372	MANUALLY ADJUSTABLE	
M373	SPORTS SEAT, LEFT,	
M373	ELECTRICALLY HEIGHT ADJUSTABLE	
M374	SPORTS SEAT, RIGHT,	
M374	ELECTRICALLY HEIGHT ADJUSTABLE	
M379	SERIES SEAT, LEFT,	
M379	ELECTRICAL VERTICAL ADJUSTMENT	
M380	SERIES SEAT, RIGHT,	
M380	ELECTRCAL VERTICAL ADJUSTMENT	
M381	SERIES SEAT LEFT,	
M381	MANUELLY ADJUSTABLE	
M382	SERIES SEAT RIGHT,	
M382	MANUALLY ADJUSTABLE	
M383	SPORT SEAT LEFT, ELECTRICAL	
M383	VERTICALLY ADJUSTABLE	
M384	BUCKET SEAT, LEFT	
M385	BUCKET SEAT, RIGHT	
M387	SPORT SEAT RIGHT, ELECTRICAL	
M387	VERTICALLY ADJUSTABLE	
M393	17" TARGA WHEEL	
M398	CUP WHEEL, 17 INCHES	
M401	CUP WHEEL, 16 INCHES	
M405	RS WHEEL, 18 INCHES	
M408	18" TECHNO WHEEL	
M413	18" TURBO-LOOK-WHEEL	
M419	REAR LUGGAGE DUMP	
M423	BOX FOR CASSETTES AND COINS	
M425	REAR WINDOW WIPER	
M432	STEERING WHEEL WITH TIPTRONIC CONTROL	
M433	LEATHER STEERING WHEEL ATIWE	
M435	LEATHER STEERING WHEEL MOMO	
M437	COMFORT SEAT LEFT,	
M437	ELECTRICALLY ADJUSTABLE	

M438 COMFORT SEAT RIGHT,
M438 ELECTRICALLY ADJUSTABLE
M439 ELECTRICAL
M439 ROOF CATCH
M441 PREPARED FOR RADIO
M445 SILVER WHEEL TRIM WITH
M445 MULTI-COLOURED COAT OF ARMS
M446 CONCAVE HUB CAPE
M446 WITH COLOURED ESCUTCHEON
M451 REDUCE RADIOPREPARATION
M454 AUTOMATIC SPEED CONTROL
M455 ANTI-THEFT DEVICE FOR WHEELS
M459 DOME STRUT
M467 OUTSIDE MIRROR FOR DRIVER'S SIDE, CONVEX,
M467 ELECTRICALLY HEATABLE AND ADJUSTABLE
M470 FIXED SPOILER
M471 FIXED SPOILER WITH ADDITIONAL WING
M479 VERSION FOR AUSTRALIA
M480 6-SPEED MANUAL TRANSMISSION
M484 VERSION FOR USA
M487 CONTROL FOR FOG LIGHTS
M487 WITH SIDE MARKER LIGHTS
M488 INSCRIPTIONS IN GERMAN LANGUAGE
M490 SOUND SYSTEM
M491 TURBO-LOOK
M491 CARRERA 4S
M492 FOR LEFT-HAND TRAFFIC
M493 NARROW BODYWORK
M495 CARRERA S
M498 WITHOUT VEHICLE-TYPE-LETTERING ON REAR END
M499 VERSION FOR GERMANY
M513 BACK-SUPPORT (LORDOSE) RIGHT SEAT
M520 PASSENGER COMPARTMENT MONITORING
M529 ANTI-DRIVE-OFF FEATURE 315 MHZ
M530 ANTI-DRIVE-OFF FEATURE -96
M530 ANTI-DRIVE-OFF FEATURE 433 MHZ 97-
M534 THEFT SECURITY SYSTEM
M544 TANK OF 75 LITRES
M545 TANK OF 92 LITRES
M551 WIND DEFLECTOR
M553 VERSION FOR USA, CANADA
M561 AIRBAGDRIVER'S SIDE
M562 AIRBAGDRIVER'S SIDE AND FRONT PASSENGER'S SIDE
M564 WITHOUT AIRBAG
M566 FOG-HEADLAMPS, WHITE
M567 WINDSHIELD TINTED, UPPER PART
M567 DARKER COLOURED
M573 AIR CONDITIONER
M576 WITHOUT REAR FOG LAMP
M586 BACK-SUPPORT (LORDOSE) LEFT SEAT
M599 ROOF COVER MOLDING

M601	HEADLAMP LITRONIC
M602	ARAISED STOP LAMP
M605	HEADLIGHT VERTICAL AIM CONTROL
M611	PREPARATION OF TELEPHONE INSTALLATION
M611	NOKIA (D-NETWORK)
M614	PREPARATION OF TELEPHONE INSTALLATION
M614	MOTOROLA (D-NETWORK)
M615	FACILITY FOR THE INSTALLATION
M615	OF A NOKIA MOBILE PHONE
M631	CHILD'S SEAT DETECTION
M650	ELECTRICAL SLIDING ROOF
M651	ELECTRIC WINDOW OPENER
M656	WITHOUT POWER-ASSISTED STEERING
M657	POWER ASSISTED STEERING
M659	COMPUTER
M660	OBD 2
M661	STRICTER EMISSION-CONTROL CONCEPT
M680	-MJ 01 DIGITAL SOUND PACKAGE
M680	MJ 02- SOUND SYSTEM BOSE ANALOG
M685	REAR SEATS, DEVIDED
M686	RADIO "PORSCHE CDR-21"
M687	RADIO "MUECHEN RD 104"
M688	RADIO "PORSCHE CDR-210"
M692	CD-CHANGER "PORSCHE "
M693	CD-RADIO LONDON RDM 42
M936	SEAT COVERS REAR, LEATHER
M937	SEAT COVERS REAR, LEATHERETTE
M938	SEAT COVERS REAR, CLOTH
M939	SEAT COVERS REAR, DRAPED LEATHER
M946	SEAT COVERS FRONT,
M946	LEATHER/LEATHER/LEATHERETTE
M975	LUGGAGE BOOT TRIM
M975	WITH VELOUR CARPET
M981	LEATHER EQUIPMENT WITHOUT SEAT COVERS
M982	SEAT COVERS FRONT,
M982	DRAPED LEATHER/LEATHER/LEATHER
M983	SEAT COVERS FRONT, LEATHER
M990	SEAT COVERS FRONT,
M990	CLOTH/CLOTH/LEATHERETTE

TR203

THIS PARTS CATALOGUE CONTAINS THE ORDER INFORMATION OF
TYPE 911 - CARRERA 4 FROM MODEL YEAR 1989 - 1994
CARRERA 2 FROM MODEL YEAR 1990 - 1994
TURBO FROM MODEL YEAR 1991 - 1994.

IT IS AVAILABLE IN TWO EDITIONS IN THE FOLLOWING LANGUAGES:

EDITION
USA, CANADA - *

EDITION
ALL OTHER COUNTRIES - GERMAN

* - ENGLISH

- FRENCH

- ITALIAN ORDER NO. WET 614 840

- SPANISH ORDER NO. WET 614 850

UPDATING IS BEING PERFORMED BY CHANGING OF UPDATE.

THE EDITION CAN BE RECOGNIZED BY THE CURRENT NO.
IN THE BOTTOM LINE OF SUBJECT UPDATE.

THE PREVIOUS UPDATE SHOULD NO LONGER BE USED.

ALL ILLUSTRATIONS ARE SUBJECT TO CHANGE WITHOUT OBLIGATION.

THE SEATS FOR EACH MODEL ARE AVAILABLE IN THE PARTS CATALOGUE
"SEATS (STZ 18)".

TR006

EXPLANATION OF THE ABRIDGED VERSION OF THE VEHICLE IDENT. NUMBERS (VIN)
USED IN THE CATALOGUE

```
 DIGIT:                1 2 3  4 5 6  7 8  9  10  11  12  13 14 15 16 17

 EXAMPLE:              W P O  Z Z Z  9 6  Z   K   S   4   0  0  1  2  5
                                     ===       =   =   =   =============
                                      !        !   !   !          !
VEHICLE TYPE 1ST+2ND DIGIT----------------+    !   !   !          !
                                               !   !   !          !
MODEL YEAR----------------------------------------+   !   !          !
                                                   !   !          !
MANUFACTURING LOCATION--------------------------------+   !          !
                                                       !          !
VEHICLE TYPE 3RD DIGIT-------------------------------------+          !
                                                                   !
SERIAL NUMBER-------------------------------------------------------+
```

Model	Year	MG	SG	Illustration	VIN No.	Update	8:34	25.11.2005
964	94	9	11	911-05		194		

FR203

VEHICLE TYPE	MY	VIN	ENGINE TYPE	
911 CARRERA 4 COUPE	89 K	96KS4 00061>05000	M64.01	184 KW
911 CARRERA 4 COUPE (USA)(CDN)	89 K	96KS4 50061>55000	M64.01	184 KW
911 CARRERA 2 COUPE	90 L	96LS4 00061>05000	M64.01/02	184 KW
911 CARRERA 2 TARGA	90 L	96LS4 10061>15000	M64.01/02	184 KW
911 CARRERA 2 CABRIO	90 L	96LS4 20061>25000	M64.01/02	184 KW
911 CARRERA 4 COUPE	90 L	96LS4 00061>05000	M64.01	184 KW
911 CARRERA 4 TARGA	90 L	96LS4 10061>15000	M64.01	184 KW
911 CARRERA 4 CABRIO	90 L	96LS4 20061>25000	M64.01	184 KW
911 CARRERA 2 COUPE (USA)(CDN)	90 L	96LS4 50061>59500	M64.01/02	184 KW
911 CARRERA 2 TARGA (USA)(CDN)	90 L	96LS4 60061>69500	M64.01/02	184 KW
911 CARRERA 2 CABRIO(USA)(CDN)	90 L	96LS4 70061>79500	M64.01/02	184 KW
911 CARRERA 4 COUPE (USA)(CDN)	90 L	96LS4 50061>59500	M64.01	184 KW
911 CARRERA 4 TARGA (USA)(CDN)	90 L	96LS4 60061>69500	M64.01	184 KW
911 CARRERA 4 CABRIO(USA)(CDN)	90 L	96LS4 70061>79500	M64.01	184 KW
911 CARRERA 2 COUPE	91 M	96MS4 00061>08000	M64.01/02	184 KW
911 CARRERA 2 TARGA	91 M	96MS4 30061>38000	M64.01/02	184 KW
911 CARRERA 2 CABRIO	91 M	96MS4 50061>58000	M64.01/02	184 KW
911 CARRERA 4 COUPE	91 M	96MS4 00061>08000	M64.01	184 KW
911 CARRERA 4 TARGA	91 M	96MS4 30061>38000	M64.01	184 KW
911 CARRERA 4 CABRIO	91 M	96MS4 50061>58000	M64.01	184 KW
911 TURBO COUPE	91 M	96MS4 70061>75000	M30.69	235 KW
911 CARRERA 2 COUPE (USA)(CDN)	91 M	96MS4 10061>18000	M64.01/02	184 KW
911 CARRERA 2 TARGA (USA)(CDN)	91 M	96MS4 40061>48000	M64.01/02	184 KW
911 CARRERA 2 CABRIO(USA)(CDN)	91 M	96MS4 60061>68000	M64.01/02	184 KW
911 CARRERA 4 COUPE (USA)(CDN)	91 M	96MS4 10061>18000	M64.01	184 KW
911 CARRERA 4 TARGA (USA)(CDN)	91 M	96MS4 40061>48000	M64.01	184 KW
911 CARRERA 4 CABRIO(USA)(CDN)	91 M	96MS4 60061>68000	M64.01	184 KW
911 TURBO COUPE (USA)(CDN)	91 M	96MS4 80061>85000	M30.69	235 KW
911 CARRERA 2 COUPE	92 N	96NS4 00061>08000	M64.01/02	184 KW
911 CARRERA 2 TARGA	92 N	96NS4 30061>38000	M64.01/02	184 KW
911 CARRERA 2 CABRIO	92 N	96NS4 50061>58000	M64.01/02	184 KW
911 CARRERA 2 RS	92 N	96NS4 90061>96000	M64.03	191 KW
911 CARRERA 2 RS M002(TOURING)	92 N	96NS4 90061>96000	M64.03	191 KW
911 CARRERA 4 COUPE	92 N	96NS4 00061>08000	M64.01	184 KW
911 CARRERA 4 TARGA	92 N	96NS4 30061>38000	M64.01	184 KW
911 CARRERA 4 CABRIO	92 N	96NS4 50061>58000	M64.01	184 KW
911 TURBO COUPE	92 N	96NS4 70061>75000	M30.69	235 KW
911 CARRERA 2 COUPE (USA)(CDN)	92 N	96NS4 20061>28000	M64.01/02	184 KW
911 CARRERA 2 TARGA (USA)(CDN)	92 N	96NS4 40061>48000	M64.01/02	184 KW
911 CARRERA 2 CABRIO(USA)(CDN)	92 N	96NS4 60061>68000	M64.01/02	184 KW
911 CARRERA 2 RS AMERICA (USA)(CDN)	92 N	96PS4 18061>18999	M64.01	184 KW
911 CARRERA 4 COUPE (USA)(CDN)	92 N	96NS4 20061>28000	M64.01	184 KW
911 CARRERA 4 TARGA (USA)(CDN)	92 N	96NS4 40061>48000	M64.01	184 KW
911 CARRERA 4 CABRIO(USA)(CDN)	92 N	96NS4 60061>68000	M64.01	184 KW
911 TURBO COUPE (USA)(CDN)	92 N	96NS4 80061>85000	M30.69	235 KW

Model	Year	MG	SG	Illustration	VIN No.	Update	8:35	25.11.2005
964	94	9	11	911-05		194		

FR203

VEHICLE TYPE	MY	VEHICLE IDENT.NR.	ENGINE TYPE	
911 CARRERA 2 COUPE	93 P	96PS4 00061>08000	M64.01/02	184 KW
911 CARRERA 2 TARGA	93 P	96PS4 30061>35000	M64.01/02	184 KW
911 CARRERA 2 CABRIO	93 P	96PS4 50061>54000	M64.01/02	184 KW
911 CARRERA 2 SPEEDSTER	93 P	96RS4 55061>58000	M64.01/02	184 KW
911 CARRERA 4 COUPE	93 P	96PS4 00061>08000	M64.01	184 KW
911 CARRERA 4 TARGA	93 P	96PS4 30061>35000	M64.01	184 KW
911 CARRERA 4 CABRIO	93 P	96PS4 50061>54000	M64.01	184 KW
911 CARRERA 2 COUPE (USA)(CDN)	93 P	96PS4 20061>28000	M64.01/02	184 KW
911 CARRERA 2 TARGA (USA)(CDN)	93 P	96PS4 40061>45000	M64.01/02	184 KW
911 CARRERA 2 CABRIO(USA)(CDN)	93 P	96PS4 60061>64000	M64.01/02	184 KW
911 CARRERA 2 SPEEDSTER (USA)(CDN)	93 P	96RS4 65061>68000	M64.01/02	184 KW
911 CARRERA 2 RS AMERICA (USA)(CDN)	93 P	96PS4 19061>19999	M64.01	184 KW
911 CARRERA 4 COUPE (USA)(CDN)	93 P	96PS4 20061>28000	M64.01	184 KW
911 CARRERA 4 TARGA (USA)(CDN)	93 P	96PS4 40061>45000	M64.01	184 KW
911 CARRERA 4 CABRIO(USA)(CDN)	93 P	96PS4 60061>64000	M64.01	184 KW
911 TURBO 3.6 COUPE	93 P	96PS4 70061>75000	M64.50	265 KW
911 TURBO 3.6 COUPE (USA)(CDN)	93 P	96RS4 80061>85000	M64.50	265 KW
911 CARRERA 2 CABRIO	94 R	96RS4 50061>54000	M64.01/02	184 KW
911 CARRERA 2 SPEEDSTER	94 R	96RS4 55061>58000	M64.01/02	184 KW
911 CARRERA 4 COUPE	94 R	96RS4 00061>08000	M64.01	184 KW
911 CARRERA 2 COUPE (USA)(CDN)	94 R	96RS4 20061>28000	M64.01/02	184 KW
911 CARRERA 2 CABRIO(USA)(CDN)	94 R	96RS4 60061>64000	M64.01/02	184 KW
911 CARRERA 2 SPEEDSTER (USA)(CDN)	94 R	96RS4 65061>68000	M64.01/02	184 KW
911 CARRERA 2 RS AMERICA (USA)(CDN)	94 R	96RS4 10061>19999	M64.01	184 KW
911 CARRERA 4 COUPE (USA)(CDN)	94 R	96RS4 20061>28000	M64.01	184 KW
911 TURBO 3.6 COUPE	94 R	96RS4 70061>75000	M64.50	265 KW
911 TURBO 3.6 COUPE (USA)(CDN)	94 R	96RS4 80061>85000	M64.50	265 KW

TR003

EXPLANATION OF THE MOTOR-NUMBERS USED IN THE CATALOGUE

```
DIGIT:                                          1 2 3   4 5 6 7 8

EXAMPLE:                                        6 2 L   0 0 1 3 6
                                                = = =   =========
                                                ! ! !       !
ENGINE TYPE (6 = 6-CYL.-ENGINE)-----------------+ ! !       !
                                                  ! !       !
ENGINE VERSION-----------------------------------+ !       !
                                                    !       !
MODEL YEAR---------------------------------------+       !
                                                        !
SERIAL NUMBER-----------------------------------------------+
```

MR203

VEHICLE TYPE	ENGINE TYPE	MY	ENGINE NO.	TECHNICAL DATA
911 CARRERA 4	M64.01	89 K	62K 00501>10000	6CYL/3.6L/184 KW
911 CARRERA 2/4	M64.01	90 L	62L 00501>50000	6CYL/3.6L/184 KW
911 CARRERA 2 TIPTRONIC	M64.02	90 L	62L 50501>60000	6CYL/3.6L/184 KW
911 CARRERA 2/4	M64.01	91 M	62M 00501>20000	6CYL/3.6L/184 KW
911 CARRERA 2 TIPTRONIC	M64.02	91 M	62M 50501>60000	6CYL/3.6L/184 KW
911 TURBO	M30.69	91 M	61M 00501>50000	6CYL/3.3L/235 KW
911 CARRERA 2/4	M64.01	92 N	62N 00501>20000	6CYL/3.6L/184 KW
911 CARRERA 2 TIPTRONIC	M64.02	92 N	62N 50501>60000	6CYL/3.6L/184 KW
911 CARRERA RS	M64.03	92 N	62N 80501>90000	6CYL/3.6L/191 KW
911 TURBO	M30.69	92 N	61N 00501>20000	6CYL/3.3L/235 KW
911 CARRERA 2/4	M64.01	93 P	62P 00501>20000	6CYL/3.6L/184 KW
911 CARRERA 2 TIPTRONIC	M64.02	93 P	62P 50501>60000	6CYL/3.6L/184 KW
911 TURBO 3.6	M64.50	93 P	61P 00501>20000	6CYL/3.6L/265 KW
911 CARRERA 2/4	M64.01	94 R	62R 00501>20000	6CYL/3.6L/184 KW
911 CARRERA 2 TIPTRONIC	M64.02	94 R	62R 50501>60000	6CYL/3.6L/184 KW
911 TURBO 3.6	M64.50	94 R	61R 00501>20000	6CYL/3.6L/265 KW

Model	Year	MG	SG	Illustration	VIN No.	Update		
964	94	9	11	911-05		194	8:35	25.11.2005

TR006

EXPLANATION OF THE TRANSMISSION-NUMBERS USED IN THE CATALOGUE

```
DIGIT:                          1  2  3  4  5     6  7  8  9 10 11 12

EXAMPLE:                        G  6  4  0  0     3  K  0  0  5  4  3
                                =  ==========     =  =  =============
                                !     !          !  !     !
                                !     !          !  !     !
TRANSMISSION TYPE---------------+     !          !  !     !
                                      !          !  !     !
TRANSMISSION VERSION--------------------+        !  !     !
                                                 !  !     !
INDEX OF VARIANTS-----------------------------------+     !
                                                    !     !
MODEL YEAR------------------------------------------------+     !
                                                              !
SERIAL NUMBER-------------------------------------------------+
```

GR203

VEHICLE TYPE	TRANSM. TYPE	MY	TRANSMISSION NO.	TECHNICAL DATA
911 CARRERA 4	G64.00	89 K	G6400 3K00501>3K20000	5-SPEED
911 CARRERA 4 (CH)	G64.01	89 K	G6401 3K00501>3K20000	5-SPEED
911 CARRERA 4 FRONT AXLE TRANSMISS.	Z64.00	89 K	Z6400 1K00501>1K20000	
911 CARRERA 2	G50.03	90 L	G5003 1L00501>1L20000	5-SPEED
911 CARRERA 2 M220	G50.03	90 L	G5003 2L00501>2L20000	5-SPEED
911 CARRERA 2 (CH)	G50.04	90 L	G5004 1L00501>1L20000	5-SPEED
911 CARRERA 2 (CH) M220	G50.04	90 L	G5004 2L00501>2L20000	5-SPEED
911 CARRERA 2 TIPTRONIC	A50.01	90 L	A5001 1L00501>1L01944	4-SPEED
911 CARRERA 4	G64.00	90 L	G6400 3L00501>3L20000	5-SPEED
911 CARRERA 4 (CH)	G64.01	90 L	G6401 3L00501>3L20000	5-SPEED
911 CARRERA 4 FRONT AXLE TRANSMISS.	Z64.00	90 L	Z6400 1L00501>1L20000	
911 CARRERA 2	G50.03	91 M	G5003 1M00501>1M20000	5-SPEED
911 CARRERA 2 M220	G50.03	91 M	G5003 2M00501>2M20000	5-SPEED
911 CARRERA 2 (CH)	G50.04	91 M	G5004 1M00501>1M20000	5-SPEED
911 CARRERA 2 (CH) M220	G50.04	91 M	G5004 2M00501>2M20000	5-SPEED
911 CARRERA 2 TIPTRONIC	A50.01	91 M	A5001 1001945>1099999	4-SPEED
911 CARRERA 4	G64.00	91 M	G6400 3M00501>3M20000	5-SPEED
911 CARRERA 4 (CH)	G64.01	91 M	G6401 3M00501>3M20000	5-SPEED
911 TURBO	G50.52	91 M	G5052 1M00501>1M20000	5-SPEED
911 CARRERA 2	G50.03	92 N	G5003 1000501>9 99999	5-SPEED
911 CARRERA 2 M220	G50.03	92 N	G5003 2000501>9 99999	5-SPEED
911 CARRERA 2 (CH)(RC)	G50.04	92 N	G5004 1000501>9 99999	5-SPEED
911 CARRERA 2(CH)(RC)M220	G50.04	92 N	G5004 2000501>9 99999	5-SPEED
911 CARRERA 2 (USA)(CDN)	G50.05	92 N	G5005 1002001>9 99999	5-SPEED
911 CARRERA 2 (USA)(CDN) M220	G50.05	92 N	G5005 2002001>9 99999	5-SPEED
911 CARRERA 2 TIPTRONIC	A50.02	92 N	A5002 1002001>9 99999	4-SPEED
911 CARRERA 2 TIPTRONIC (USA)(CDN)	A50.03	92 N	A5003 1002001>9 99999	4-SPEED
911 CARRERA 2 RS	G50.10	92 N	G5010 2002001>9 99999	5-SPEED
911 CARRERA 4	G64.00	92 N	G6400 3000501>9 99999	5-SPEED
911 CARRERA 4 (CH)	G64.01	92 N	G6401 3000501>9 99999	5-SPEED
911 CARRERA 4 (RC)	G64.02	92 N	G6402 3002001>9 99999	5-SPEED
911 TURBO	G50.52	92 N	G5052 2000501>9 99999	5-SPEED

GR203

VEHICLE TYPE	TRANSM. TYPE	MY	TRANSMISSION NO.	TECHNICAL DATA
911 CARRERA 2	G50.03	93 P	G5003 1002001>9 99999	5-SPEED
911 CARRERA 2 M220	G50.03	93 P	G5003 2002001>9 99999	5-SPEED
911 CARRERA 2 (CH)(RC)	G50.04	93 P	G5004 1002001>9 99999	5-SPEED
911 CARRERA 2(CH)(RC)M220	G50.04	93 P	G5004 2002001>9 99999	5-SPEED
911 CARRERA 2 (USA)(CDN)	G50.05	93 P	G5005 1002001>9 99999	5-SPEED
911 CARRERA 2 (USA)(CDN) M220	G50.05	93 P	G5005 2002001>9 99999	5-SPEED
911 CARRERA 2 TIPTRONIC	A50.02	93 P	A5002 1002001>9 99999	4-SPEED
911 CARRERA 2 TIPTRONIC (USA)(CDN) (RC)	A50.03	93 P	A5003 1002001>9 99999	4-SPEED
911 CARRERA 4	G64.00	93 P	G6400 3002001>9 99999	5-SPEED
911 CARRERA 4 (CH)	G64.01	93 P	G6401 3002001>9 99999	5-SPEED
911 CARRERA 4 (RC)	G64.02	93 P	G6402 3002001>9 99999	5-SPEED
911 TURBO 3.6	G50.52	93 P	G5052 2002001>9 99999	5-SPEED
911 CARRERA 2	G50.03	94 R	G5003 1002001>9 99999	5-SPEED
911 CARRERA 2 M220	G50.03	94 R	G5003 2002001>9 99999	5-SPEED
911 CARRERA 2(CH)(RC)	G50.04	94 R	G5004 1002001>9 99999	5-SPEED
911 CARRERA 2(CH)(RC)M220	G50.04	94 R	G5004 2002001>9 99999	5-SPEED
911 CARRERA 2(USA)(CDN)	G50.05	94 R	G5005 1002001>9 99999	5-SPEED
911 CARRERA 2(USA)(CDN) M220	G50.05	94 R	G5005 2002001>9 99999	5-SPEED
911 CARRERA 2 TIPTRONIC	A50.02	94 R	A5002 1002001>9 99999	4-GANG
911 CARRERA 2 TIPTRONIC (USA)(CDN) (RC)	A50.03	94 R	A5003 1002001>9 99999	4-GANG
911 CARRERA 4	G64.00	94 R	G6400 3002001>9 99999	5-GANG
911 TURBO 3.6	G50.52	94 R	G5252 2002001>9 99999	5-GANG

TR006

LEGENDS AND NOTICES

IN COLUMN -S- STATUS

N	NEW ADDITION
P	PART ALREADY IN PROGRAMME, BUT NEW AT THIS APPLICATION
W	DELETED AT THIS APPLICATION, BUT CONTINUED TO BE CARRIED
A	STOCK TO BE USED UP
U	DELETED WITHOUT REPLACEMENT
*	PART ALSO OR ONLY AVAILABLE IN REPAIR KIT
>	ALSO AVAILABLE IN EXCHANGE

IN COLUMN - ILL. -

1	IDENTIFICATION NO. IN ILLUSTRATION
(1)	PART ONLY SIMILAR AS ILLUSTRATED
-	PART IS NOT ILLUSTRATED

FIG.-NUMBERS FOR WHICH THERE IS SHOWN NO TEXT ARE NOT VALID FOR THIS EDITION OF CATALOGUE

IN COLUMN -PART NUMBER/CODE-

000 000 000 00	PART NUMBER EQUALS ORDERING NO., IF A CODE IS SHOWN, IT WILL HAVE TO BE PART OF ORDERING NUMBER
01C	COLOUR CODE

IN COLUMN -TEXT

INSTALLATION WITH ENGINE OR CHASSIS NUMBER-RANGE

		EXAMPLE:
M 62L 00389>>		FROM ENGINE NO.
F	>>96LS4 00889	UP TO CHASSIS NO.

TR006

```
                    IN COLUMN  - A -
                    ----------------

                    IDENTIFICATION LETTER FOR PERIOD OF INSTALLATION
                    THAT IS REPEATED SEVERAL TIMES IN THE CATALOG GROUP.

                    EXPLANATION PLEASE FIND IN TEXT COLUMN OF THE CATALOG GROUP


                    IN COLUMN   - QU -   = NO. OF PIECES
                    ------------------------------------

          1         NUMBER PER APPLICATION

          X         NUMBER AS NEEDED

          *         AVAILABLE ONLY IN RUNNING LENGTHS   1 = 1 METRE


                    IN COLUMN   - MODEL/SYMBOL -
                    ----------------------------

         M650       OPTIONAL EQUIPMENT  -  SEE M-NO. LIST

         -90        LIMITATION OF MODEL YEAR FOR INSTANCE: VALID UP TO
                    END OF MODEL YEAR 1990

        /LL         LHD

        /RL         RHD
                    ---------+
        /V          FRONT    I
                             I
        /H          REAR     I
                             I---> APPLIES TO
        /L          LEFT     I     DIRECTION OF TRAVEL
                             I
        /R          RIGHT    I
                    ---------+

        C2          CARRERA 2

        C4          CARRERA 4

        AUT.        AUTOMATIC

        WW          THE PART CAN BE USED INSTEAD OF THE
                    PRECEDING ONE.
```

TR203

EQUIPMENT BY COUNTRY REGULATIONS
==========

(A)	AUSTRIA
(AG)	ARABIAN GULF STATES
(AUS)	AUSTRALIA
(B)	BELGIUM
(CDN)	CANADA
(CH)	SWITZERLAND
(D)	FEDERAL REPUBLIC OF GERMANY
(DK)	DENMARK
(E)	SPAIN
(F)	FRANCE
(GB)	GREAT BRITAIN
(GR)	GREECE
(HK)	HONGKONG
(I)	ITALY
(J)	JAPAN
(L)	LUXEMBURG
(N)	NORWAY
(NL)	NETHERLANDS
(NZ)	NEW ZEALAND
(P)	PORTUGAL
(RC)	TAIWAN
(S)	SWEDEN
(SA)	SAUDI ARABIA
(SF)	FINLAND
(USA)	UNITED STATES OF AMERICA
(ZA)	SOUTH AFRICA